"APPROVED FOR RELEASE: 07/19/2001 CIA-RDP86-00513R001033720013-1

MEYEROV, M. V.

103-12-3/12

AUTHOR: Meyerov, M. V. (Moscow)

TITLE: Note on the Synthesis of Structures of Multiple-Looped Control Systems Including Elements with Lag (K sintezu struktur mnogosvyaznogo regulirovaniya pri nalichii elementov s zapazdyvaniyem).

PERIODICAL: Avtomatika i Telemekhanika, 1957, Vol. 18, Nr 12, pp. 1098-1108 (USSR)

ABSTRACT: This paper is a continuation of previous publications (reference 1-3). As an additional factor systems are investigated here, comprising multiple looped control, where a section of the circuits (or all of them) contain elements with lag, just as in the case of the papers referred to by 1-3, the following task is given here:
1.) The structure is to be found of such systems with multiple- looped control and with elements with lag, which permit an unlimited increase of the amplification coefficients of single circuits without disturbing the stability of the whole system. The basic properties of these structure from the viewpoint of the statics and dynamics of the process of an automatic control are to be determined. On the basis

Card 1/3

APPROVED FOR RELEASE: 07/19/2001 CIA-RDP86-00513R001033720013-1"

"APPROVED FOR RELEASE: 07/19/2001 CIA-RDP86-00513R001033720013-1

of the investigations conducted here, it is shown, that it is necessary and sufficient for the purpose of keeping a control system with multiple-loops and with elements with lag even in the case of an unlimited increase of its amplification coefficients in a stable state, to demand, that every separate control circuit, the amplification coefficient of which is in a condition to increase unlimitedly, belongs to that class of systems, with respect to its structure, which remain stable even in the case of an unlimited amplification coefficient. It is shown, that the introduction of stabilizing arrangements at the input guarantees an additional excitation of the type $\sum \alpha_{ik} x_k$ and the increase of the amplification coefficient K_{iox} the independent course of the process in every single circuits of the control system with multiple loops and elements with lag. In that case, conditions ensuring the stability of the system on an unlimited increase of the amplification coefficient must be satisfied, of course, aik denotes the coefficient, determining the interrelation

APPROVED FOR RELEASE: 07/19/2001 CIA-RDP86-00513R001033720013-1"

"APPROVED FOR RELEASE: 07/19/2001 CIA-RDP86-00513R001033720013-1

Note on the Synthesis of Structures of Multiple-Looped Control Systems Including Elements with Lag 103-12-3/12

of the controlled quantity with index i and k respectively. a_{ik} may be a number or an operator.

There are 4 figures, and 6 references, 6 of which are Slavic.

SUBMITTED: February 1, 1957

AVAILABLE: Library of Congress

Card 3/3

APPROVED FOR RELEASE: 07/19/2001 CIA-RDP86-00513R001033720013-1"

"APPROVED FOR RELEASE: 07/19/2001 CIA-RDP86-00513R001033720013-1

AUTHOR: Meyerov, M. V. (Moscow) 103-19-7-1/9

TITLE: Theory of the Structure of High-Speed Automatic Control Systems (Teoriya postroyeniya struktur bystrodeystvuyushchikh sistem avtomaticheskogo regulirovaniya)

PERIODICAL: Avtomatika i telemekhanika, 1958, Vol 19, Nr 7, pp 621 - 632 (USSR)

ABSTRACT: In the references 1-3 the rules for the composition of the structures of automatic control systems which are stable in case of an unlimited increase of the amplification factor were stated. Here the investigations on the synthesis of such structures, with in the frame of which practically an arbitrary range of the positive real frequency characteristic can be obtained, were continued. I.e. a system with an arbitrary frequency transmission range can be obtained. Such systems have a high amplification factor not only at zero frequency but over the whole frequency range. The stabilizing devices hereby have a transmission function of the type $\mu/F(p)$. The possibility is explained of using elements with transmission functions $\mu/F(p)$, where μ is a constant, as stabilizing elements. A structure scheme of an automatic control system of N elements with transmission functions

Card 1/4

APPROVED FOR RELEASE: 07/19/2001 CIA-RDP86-00513R001033720013-1"

"APPROVED FOR RELEASE: 07/19/2001 CIA-RDP86-00513R001033720013-1

$\frac{K_i}{D_i(p)}$ is investigated. n of these elements are comprised by stabilizing devices and this in form of local feedbacks with transmission functions

$\frac{\mu_i}{F_i(p)}$. It is assumed that the amplification factors of these n elements can be varied within wide limits in the special case arbitrarily increased. First the transmission function of the given scheme is determined. Then the properties of the system are determined. It is shown that for the systems of the examined type the following property of the structure is valid as necessary condition for the stability at $K_i \to \infty$: $d_i + v_i \leqslant 2$. Here 3 cases are possible: 1) $v_i = 0$. The case of the introduction of a rigid feedback. 2) $v_i = 1$. The stabilizing device is an integrating or an aperiodical member. This is the case with a transmission function of the type

APPROVED FOR RELEASE: 07/19/2001 CIA-RDP86-00513R001033720013-1"

"APPROVED FOR RELEASE: 07/19/2001 CIA-RDP86-00513R001033720013-1

$\frac{\mu_i}{1 + \tau_1 p}$. 3) $v_i = 2$. The stabilizing member is a member of second order. This is the case with transmission function of the type

$\frac{\mu_i}{ap^2 + bp + 1}$. All three cases here are discussed in detail. Subsequently general considerations are given. It is shown that no conclusions on the properties of the system can be drawn if considerations are only based upon the fact that some of the operator multiplicands can be shortened as a consequence of the inversion of the transmission functions of the stablizing devices by amplifiers with high amplification factors. This can lead to great errors. Therefore in all cases first the stability conditions of the auxiliary and of the degenerate equation must be explained and then only on the base of these conditions one must choose the

APPROVED FOR RELEASE: 07/19/2001 CIA-RDP86-00513R001033720013-1"

"APPROVED FOR RELEASE: 07/19/2001 CIA-RDP86-00513R001033720013-1

Theory of the Structure of High-Speed 103-19-7-1/9
Automatic Control Systems

values of the constants of stabilizing devices. Finally methods for the consideration of the restrictions which are conditioned by the non-linearity of the characteristics of some elements are shown. Summarizing, it is stated that methods for the structure synthesis with principally arbitrary reproduction accuracy were obtained. There are 3 figures and 9 references, 9 of which are Soviet.

SUBMITTED: June 23, 1957

1. Control systems—Design 2. Control systems—Mathematical analysis

Card 4/4

APPROVED FOR RELEASE: 07/19/2001 CIA-RDP86-00513R001033720013-1"

"APPROVED FOR RELEASE: 07/19/2001 CIA-RDP86-00513R001033720013-1

MEYEROV, M.V.; SEMENOV, I.B.; YARINA, V.Z. (Moskva).

Design of a contact frequency converter for automatic control of induction motors [with summary in English]. Avtom. i telem. 20 no.1:45-53 Ja '59. (MIRA 12:1)
(Frequency changers) (Electric motors, Induction)

APPROVED FOR RELEASE: 07/19/2001 CIA-RDP86-00513R001033720013-1"

"APPROVED FOR RELEASE: 07/19/2001 CIA-RDP86-00513R001033720013-1

9(2,5);16(1) PHASE I BOOK EXPLOITATION SOV/2986

Meyerov, Mikhail Vladimirovich

Sintez struktur sistem avtomaticheskogo regulirovaniya vysokoy tochnosti (Synthesis of Structures of High-precision Automatic Control Systems) Moscow, Fizmatgiz, 1959. 284 p. Errata slip inserted. 10,000 copies printed.

Ed.: O.K. Sobolev; Tech. Ed.: S.S. Gavrilov.

PURPOSE: This book is intended for designers, technical personnel, and students in the field of automatic control systems.

COVERAGE: This book deals with the synthesis of precision automatic control systems. It is claimed to be the first book to systematically present material on the synthesis of structures of automatic control systems. The term structure as used in the book refers to the dynamic properties of systems and their component elements, as described by their transfer functions. Thus, physically different systems (electric, hydraulic, etc.) can have the same structure. Problems of stability are dealt with, and an attempt is made to establish scientific principles

Card 1/7

APPROVED FOR RELEASE: 07/19/2001 CIA-RDP86-00513R001033720013-1"

"APPROVED FOR RELEASE: 07/19/2001 CIA-RDP86-00513R001033720013-1

MEYEROV, M. V.

"Special Structural Features of the Systems with Multiplex Control."

paper presented at the First International Congress of the International Federation On Automatic Control (IFAC), Moscow, 27 June - 7 July 1960.

APPROVED FOR RELEASE: 07/19/2001 CIA-RDP86-00513R001033720013-1"

"APPROVED FOR RELEASE: 07/19/2001 CIA-RDP86-00513R001033720013-1

MEYEROV, M. V.

report to be presented at the 1st Intl Congress of the Intl Federation of Automatic Control, 25 Jun-5 Jul 1960, Moscow, USSR.

LEMKER, A. Ya. - "The application of a self-adjusting system of automatic control"
MALOV, V. S., PSHENICHNIKOV, A. M., and [illegible] A. - "Industrial telemeasurement systems and digital technique"
MEYEROV, M. V. - "Some peculiarities of the structure of multi-communications regulation systems"
MIHSAYLOVSKIY, V. N. - "Evaluation indexes and the possibility of increasing the quality of telemeasurement systems"
[illegible]SKIY, V. V. - "Concerning the problem of established routines in automatic regulation systems"
[illegible], K. A. "Principals of construction of digital double code automatic compensators"
[illegible], Yu. I. - "Concerning the relation of systems of automatic regulation with the parameters of periodic movements"
[illegible], N. S., and [illegible], V. L. - "System of automatic control of cutting of rolled metal on a continuous bar mill with the use of digital calculating machines"
[illegible], V. M. - "Some principles of organizing systems of complex automation of large scale chemical production and optimization of these systems"
OSTROVSKIY, G. M. - "Systems of automatic regulation with intermittent change of parameters"
PEROV, V. P. - "Statistical synthesis of impulse systems"
PETROV, B. N. - "The invariant principle and its application in the calculation of linear and nonlinear systems"
PIVEN, V. D. - "The problem of autonomy in the technique of automatic control"
POPOV, E. P. - "Some problems of synthesis of automatic control non-linear systems"
PUDACHEV, V. S. - "Method of determining the optimum system with non-linear relation of the observed function with the parameters of the signal"
PUTSILLO, V. P., PETROV, V. V., [illegible], R. V., and VOLODIN, E. E. - "Principles of construction of a single class of extra control systems for automating production processes"
ROGINSKIY, V. N. - "The development of the theory of relay devices in the USSR"
ROZENBLAT, M.A. - "Dynamic characteristics of cores with right angle hysteresis winding and their influence on magnetic boosters"
ROZONER, L. I. - "Varied methods of investigating the quality of automatic control systems"
RUSHINSKIY, V. M. - "Dynamics of automatic regulation of boiler-turbine units"
SHUMILOVSKIY, N. E., MEL'TTSER, L. V., NAUMOV, A. A., MEN-CHERI-CHERUN, and FIVOVAROV, L. A. - "Automatic control of composition of multi-ingredient mixtures"
SHAGOVSKIY, E. S., and SEGALIN, V. G. - "Some results of work for the utilization of radioactive radiation for automatic control of mining machinery"
SOLODOVNIKOV, Y. V., BATKOV, A. M., BABURIN, V. M., VAL'DEYBERG, Yu. S., MATVEYEV, P. S., and POKROVSKIY, A. K. - "Analyses and synthesis of automatic control systems with the aid of calculating machine facilities"
STARKOVSKIY, R. I., FITCHER, L. B., and [illegible] - "Automatic optimizers and their use for solution of variation problems in automatic synthesis"
STRAKHOV, S. V. - "A system of alternating current electric drives with autonomous power supply"
TAKSAR, I. M., and YANUSHKOVSKIY, V. A. - "Apparatus for technical control of production with the use of nuclear radiation"
TRODORCHIK, K. F., and BENDRIKOV, G. A. - "Methods of organizing the trajectory of roots of linear systems and qualitative determination of type of trajectory"
TSYPKIN, Ya. Z. - "Elements of the theory of digital automatic systems"
VERCHKOVSKIY, D. B., KASHIRIN, V. A., CHUGIN, Yu. I., and SHASTOVA, G. A. - "Static stability of telemeasurement"
VENIKOV, V. A. - "Interactions of a mathematical modeling and calculating technology experiment in calculating loads in electrical systems"

APPROVED FOR RELEASE: 07/19/2001 CIA-RDP86-00513R001033720013-1"

"APPROVED FOR RELEASE: 07/19/2001 CIA-RDP86-00513R001033720013-1

GAVRILOVA, M.A., doktor tekhn.nauk; ARTOBOLEVSKIY, S.I., doktor tekhn. nauk; BERSHTEYN, S.I., kand. tekhn. nauk; BOLGAKOV, A.A., kand. kand. tekhn. nauk; LERNER, A.Ya., doktor tekhn. nauk; MEYEROV, M.V., doktor tekhn. nauk ; SUKHOV, N.K., doktor tekhn. nauk; FEL'DBAUM, A.A., doktor tekhn. nauk; FILIPPOVICH, B.I., doktor tekhn. nauk; KHAMOY, A.V., doktor tekhn. nauk; SHORYGIN, A.B., doktor tekhn. nauk

[Terminology on the basic concepts of automatic control] Terminologiia osnovnykh poniatii avtomatiki; doklad. Moskva, 1960. 31 p. (International Federation of Automatic Control, ost Internationa Congress, Moscow, 1960. Doklady, no.232) (MIRA 14:8)

1. Natsional'nyy komitet po avtomaticheskomu upravleniyu. Nauchno-tekhnicheskiy komitet terminologii. 2. Nauchno-tekhnicheskiy komitet terminologii Natsional'nogo komiteta SSSR po avtomaticheskomu upravleniyu (for all).
(Automatic control—Terminology)

APPROVED FOR RELEASE: 07/19/2001 CIA-RDP86-00513R001033720013-1"

"APPROVED FOR RELEASE: 07/19/2001 CIA-RDP86-00513R001033720013-1

TRAPEZNIKOV, V.A., akademik, glav. red.; AYZERMAN, M.A., doktor tekhn. nauk, red.; AGEYKIN, D.I., kand. tekhn. nauk, red.; ARTOBOLEVSKIY, I.I., akademik, red.; BATRACHENKO, L.P., inzh., red.; VORONOV, A.A., doktor tekhn. nauk, red.; GAVRILOV, M.A., doktor tekhn. nauk, red.; DIKUSHIN, V.I., akademik, red.; KARIBSKIY, V.V., kand. tekhn. nauk, red.; KOGAN, B.Ya., kand. tekhn. nauk, red.; KRASIVSKIY, S.P., red.; KULEBAKIN, V.S., akademik, red.; LERNER, A.Ya., doktor tekhn. nauk, red.; LETOV, A.M., kand. tekhn. nauk, red.; MEYEROV, M.V., doktor tekhn. nauk, red.; PETROV, B.N., akademik, red.; PUGACHEV, V.S., doktor tekhn. nauk, red.; SOTSKOV, B.S., red.; STEFANI, Ye.M., kand. tekhn. nauk, red.; KHRAMOY, A.V., kand. tekhn. nauk, red.; TSYPKIN, Ya.Z., doktor tekhn. nauk, prof., red.; CHELYUSTKIN, A.O., kand. tekhn. nauk, red.; CHILIKIN, M.G., doktor tekhn. nauk, red.; NAUMOV, B.N., kand. tekhn. nauk, red.; KASHINA, P.S., tekhn. red.

[Transactions of the International Federation of Automatic Control, 1st International Congress, Moscow, 1960] Trudy I Mezhdunarodnogo kongressa Mezhdunarodnoi federatsii po avtomaticheskomu upravleniiu. Moskva, Izd-vo Akad. nauk SSSR. Vol.2. [Theory of discrete systems, optimal systems, and adaptive automatic control systems] Teoriia diskretnykh, optimal'nykh i samonastraivaiushchikhsia sistem. 1961. 996 p. (MIRA 14:9)

1. International Federation of Automatic Control, 1st International Congress, Moscow, 1960. 2. Chlen-korrespondent AN SSSR (for Sotskov) (Automatic control)

APPROVED FOR RELEASE: 07/19/2001 CIA-RDP86-00513R001033720013-1"

"APPROVED FOR RELEASE: 07/19/2001 CIA-RDP86-00513R001033720013-1

S/569/61/001/000/006/019
D274/D304

16.8000 (1031, 1137, 1103)

AUTHOR: Mayerov, M. V. (USSR)

TITLE: Some structural properties of multidimensional control systems

SOURCE: International Federation of Automatic Control. 1st Congress. Moscow, 1960. Teoriya neprerywnykh sistem. Spetsial'nyye matematicheskiye problemy. Moscow, Izd-vo AN SSSR, 1961. Trudy, v. 1, 201-211

TEXT: The dependence of the character of the relationships between the controlled variables on the structure of multidimensional systems is considered. This dependence is related to the properties of the system and in particular to their autonomy and invariance. The differential equations are set up for the most general case when the controlled variables are connected simultaneously through the controlled object (process), the measuring device and the load. Thereby two cases are considered: (a) The control systems with respect to each variable are single-loop

Card 1/5

APPROVED FOR RELEASE: 07/19/2001 CIA-RDP86-00513R001033720013-1"

"APPROVED FOR RELEASE: 07/19/2001 CIA-RDP86-00513R001033720013-1

S 569/61/001/000/006/019
D274/D304

Some structural properties

and (b) multiloop. Case (a). It is assumed that the object has n variables. The following notations are introduced with respect to the i-th controlled variable: k_i — the gain, $D_i(p)$ — the operator of the object, y_i — the controlled variable, y_{ir} — the reference variable, δ_{ik} — a factor which characterizes the relationship between the i-th and the k-th variable, Ω and R characterize the measuring device, Ω and δ — characterize the control mechanism, f_i — the load. In operator notation, the object is described by

$$D_i(p)y_i(p) = k_i \left[- \sum_{\substack{k=1 \\ k \neq i}}^{n} \delta_{ik}(p)y_k(p) + y_i(p) + \sum_{k=1}^{n} \delta_{ik}(p)f_k \right] . \qquad (1)$$

After transformations, one obtains

Card 2/5

APPROVED FOR RELEASE: 07/19/2001 CIA-RDP86-00513R001033720013-1"

"APPROVED FOR RELEASE: 07/19/2001 CIA-RDP86-00513R001033720013-1

31321
S/569/61/001/000/006/019
D274/D304

Some structural properties...

$$\left[\frac{1}{k_{iy}\delta_i\mu_i} D_i(p)Q_i(p)R_i(p) + k_i\right] y_i(p) +$$

$$+ \frac{k_i}{\mu_i k_{iy}\delta_i} \sum_{\substack{k=1\\k\neq i}}^{k} \left[Q_i(p)R_i(p)\alpha_{ik}(p) + \mu_i\delta_i k_{iy} r_{ik}\right] y_k(p) = \qquad (6)$$

$$= k_i \left[y_{ir}(p) + \sum_{\substack{k=1\\k\neq i}}^{n} r_{ik} y_{kr}\right] +$$

$$+ \frac{k_i}{\mu_i k_{iy}\delta_i} Q_i(p)R_i(p) \sum_{k=1}^{n} \beta_{ik}(p) f_k \quad .$$

Card 3/5

APPROVED FOR RELEASE: 07/19/2001 CIA-RDP86-00513R001033720013-1"

"APPROVED FOR RELEASE: 07/19/2001 CIA-RDP86-00513R001033720013-1

31371
S/569/61/001/000/006/019
D274/D304

Particular cases of Eq. (6) are: multidimensional servomechanisms (if α and β are zero) and combined control systems (if α and r are zero). From Eq. (6), it follows that the connection between the controlled variables will be the stronger, the larger the gain of the object, and the weaker the larger the gain of the controller. The mutual influence of the controlled variables can be reduced to an arbitrarily small value by corresponding increase of the controller gain. Thereby, the system should remain stable. Thus, the problem of invariance or autonomy reduces to system stability with arbitrarily large gain. However, for single-loop systems, an infinite gain leads unavoidably to instability. If, however, derivatives (from the (n-2)-nd to the first) are introduced into the control loop, a single-loop system with a gain approaching infinity can be realized. Case (b): An equation, analogous to Eq. (6) is obtained. From the obtained equation it follows that the character of the relationships between the variables is determined by six terms involving the gain factors and the operators of the controller and of the compensating network. Further, the system autonomy is considered for $r_{ik} = 0$. For configurations which remain stable with infinite gain factors, the overall gain can be

APPROVED FOR RELEASE: 07/19/2001 CIA-RDP86-00513R001033720013-1"

"APPROVED FOR RELEASE: 07/19/2001 CIA-RDP86-00513R001033720013-1

31321
S/569/61/001/000/006/019
D274/D304

infinitely increased. In this case (i.e., with sufficiently large overall gain), the system is autonomous to within ε in steady-state conditions. Further, the conditions are ascertained under which the system remains stable when the gain approaches infinity. Multidimensional combined systems: These are systems which are controlled by both deviation and load. In the references, it was established that the invariance of a controlled variable with respect to the load can be realized if between the point of application of the disturbance (load) and the point where the controlled variable is measured there are at least two circuits. In the case under consideration this means that the system will be invariant if it is a combined system. This statement is illustrated by the example of a system with 3 interrelated variables. The conclusion is reached that, if the system is designed according to the Polzunov-Watt principle, the influence of the loads can be eliminated (to within ε) only in configurations which permit an unlimited gain factor without loss of stability. The discussion contained only a comment by M. N. Babushkin, which was of a critical nature. There are 2 figures and 6 Soviet-bloc references.

APPROVED FOR RELEASE: 07/19/2001 CIA-RDP86-00513R001033720013-1"

"APPROVED FOR RELEASE: 07/19/2001 CIA-RDP86-00513R001033720013-1

S/024/61/000/006/003/019
E140/E335

16.8000

AUTHOR: Meyerov, M.V. (Moscow)

TITLE: Multiply-coupled control systems

PERIODICAL: Akademiya nauk SSSR. Izvestiya. Otdeleniye tekhnicheskikh nauk. Energetika i avtomatika, no. 6, 1961, 21 - 29

TEXT: The article considers certain properties of multiply-coupled control systems, where the couplings between individual regulated parameters occur through the controlled object and measurement system, where the control circuits for each individual regulated parameter have a single-loop structure consisting of basic element - the controlled object, measurement system, amplifiers and control organs. Each regulated quantity corresponds to a separate transfer function. The article takes into account inertial elements in the control loops. Matrix notation is used for the system equations as it is clearer and simplifies the investigation. A general expression is obtained for the regulated quantity in the form of a column vector. The concept of error coefficient matrix for the general case of a multiply-

Card 1/2

APPROVED FOR RELEASE: 07/19/2001 CIA-RDP86-00513R001033720013-1"

"APPROVED FOR RELEASE: 07/19/2001 CIA-RDP86-00513R001033720013-1

Multiply-coupled control systems S/024/61/000/006/003/019
E140/E335

coupled control system is introduced, which is analogous to the form introduced in the paper of N. Colomb and E.J. Justin (Ref. 2: Franklin Institute, 1952, No. 2). The error coefficient matrix is the product of two matrices which are dependent on the coupling coefficients in the error coefficient matrix of each separate system. The following general conclusions are obtained: the mutual influence of the error coefficients of different circuits will be the weaker, the higher the amplifications in the individual systems and the stronger, the greater are the coupling factors through the object and the measurement system.
There are 1 figure and 3 references: 2 Soviet-bloc (one of which is a translation from a non-Soviet-bloc publication) and 1 non-Soviet-bloc (quoted in text).

SUBMITTED: July 12, 1961

Card 2/2

APPROVED FOR RELEASE: 07/19/2001 CIA-RDP86-00513R001033720013-1"

"APPROVED FOR RELEASE: 07/19/2001 CIA-RDP86-00513R001033720013-1

2)247
S/103/61/022/010/006/018
D274/D301

16.8000 (1031,1132,1344)

AUTHOR: Meyerov, M. V.

TITLE: On the possibility of noise-suppression in a class of dynamic systems

PERIODICAL: Avtomatika i telemekhanika, v. 22, no. 10, 1961, 1314-1322

TEXT: It is shown that for a certain class of configurations, namely those which permit an unlimited increase in the gain factor without becoming unstable, the noise can be suppressed (under certain conditions) by increasing the gain factors of certain elements. Both single-parameter systems and multidimensional systems are considered. Fig. 1 represents a block-diagram of the single-parameter system. The input signal x_{in} is assumed to be noise-free. The transfer functions of the noise-free elements are denoted by $K_i R_i(p)/D_i(p)$. For the elements which are affected by noise, it is assumed that the noise and signal are applied at different points; the respective transfer functions are $K'_i R'_i(p)/D'_i(p)$. The

Card 1/6

APPROVED FOR RELEASE: 07/19/2001 CIA-RDP86-00513R001033720013-1"

"APPROVED FOR RELEASE: 07/19/2001 CIA-RDP86-00513R001033720013-1

necessary condition for this class of systems is that the first element be noise-free. From the transfer functions of the system (Fig. 1), the expression

$$\left[m^2 \prod_{i=1}^{4} D_i(p) D_2'(p) D_4'(p) + D_2'(p) D_4'(p) \prod_{i=1}^{4} R_i(p) K_2 K_4 \right] x_{out} =$$

$$= D_2'(p) D_4'(p) \prod_{i=1}^{4} R_i(p) K_2 K_4 \; x_{in} +$$

$$+ m D_1(p) D_2(p) D_4'(p) R_3(p) R_4(p) R_2'(p) K_2' K_4 f_1 + \qquad (6)$$

$$+ m^2 \prod_{i=1}^{4} D_i(p) D_2'(p) R_4'(p) K_4' f_2$$

APPROVED FOR RELEASE: 07/19/2001 CIA-RDP86-00513R001033720013-1"

"APPROVED FOR RELEASE: 07/19/2001 CIA-RDP86-00513R001033720013-1

is obtained, where $1/K_1 = 1/K_3 = m$. If the system remains stable for $m \to 0$, Eq. (6) yields: $\lim_{m \to 0} x_{out} = x_{in}$. In other terms, if the system remains stable with infinitely large gain factors of the elements not directly subjected to the noise, the signal can be reproduced to any accuracy required. In this case, the configuration is characterized by the fact that the noises are suppressed by the gain factors of the elements which are placed between the input and the element which is affected by the noise. The above system is realizable if it remains stable with infinitely large gain factors. The system's stability is determined by the roots of the equation

$$m^2 \prod_{i=1}^{4} D_i(p) + K_2 K_4 \prod_{i=1}^{4} R_i(p) = 0 \quad \text{for} \quad m \to 0 \qquad (8)$$

The roots of Eq. (8) will lie to the left of the imaginary axis if:

APPROVED FOR RELEASE: 07/19/2001 CIA-RDP86-00513R001033720013-1"

"APPROVED FOR RELEASE: 07/19/2001 CIA-RDP86-00513R001033720013-1

(a) $N_2 - N_1$ 2, where N_2 denotes the degree of the polynomial $\prod^4 D_i$, and N_1 of the polynomial $\prod^4 R_i$; (b) the equation $\prod_{i=1}^{4} R_i(p)K_2K_4 = 0$ should satisfy the stability conditions; (c) the coefficients of the polynomials of Eq. (8) should satisfy a given relationship, depending on whether $N_2 - N_1$ equals two or unity. Further, the case which is most difficult to realize in practice is considered. Denoting $\prod^n K_i \prod^N K_j$ by K_{deg}, one obtains

$$= \prod_{i=1}^{N} (1 + T_i p) + K_{deg} = 0 \qquad (9)$$

where N is the number of elements (all of which are aperiodic), v--the

APPROVED FOR RELEASE: 07/19/2001 CIA-RDP86-00513R001033720013-1"

"APPROVED FOR RELEASE: 07/19/2001 CIA-RDP86-00513R001033720013-1

(a) $N_2 - N_1$ 2, where N_2 denotes the degree of the polynomial $\prod^4 D_i$, and N_1 of the polynomial $\prod^4 R_i$; (b) the equation $\prod_{i=1}^{4} R_i(p)K_2K_4 = 0$ should satisfy the stability conditions; (c) the coefficients of the polynomials of Eq. (8) should satisfy a given relationship, depending on whether $N_2 - N_1$ equals two or unity. Further, the case which is most difficult to realize in practice is considered. Denoting $\prod^n K_i \prod^N K_j$ by K_{deg}, one obtains

$$= v \prod_{i=1}^{N} (1 + T_i p) + K_{deg} = 0 \qquad (9)$$

where N is the number of elements (all of which are aperiodic), v--the

APPROVED FOR RELEASE: 07/19/2001 CIA-RDP86-00513R001033720013-1"

"APPROVED FOR RELEASE: 07/19/2001 CIA-RDP86-00513R001033720013-1

number of elements (among N) with large gain factor. N-2 amplifiers are introduced into the system. Fig. 2 shows such a system. After transformations, one obtains

$$K_2K_4 \prod_{i=1}^{N-2} (1 + T_i p) = 0 \qquad (18)$$

which satisfies always the stability conditions: The necessary and sufficient stability condition involves an auxiliary equation and can be ensured by appropriate choice of T_i and of K_2K_4. In the case of a multidimensional system, too, the noise in the i-th circuit can be suppressed by increasing the gain factor. The system can be considered as composed of n noninteracting simple systems. It follows that the stability of the multidimensional system can be ensured; hence, such a system is feasible. There are 3 figures and 14 references: 13 Soviet-bloc and 1 non-Soviet-bloc. The reference to the English-language publication reads as follows: N. Wiener, Extrapolation, Interpolation and Smoothing of Sta-

4

APPROVED FOR RELEASE: 07/19/2001 CIA-RDP86-00513R001033720013-1"

"APPROVED FOR RELEASE: 07/19/2001 CIA-RDP86-00513R001033720013-1

29247
S/103/61/022/010/006/018
D274/D301

On the possibility...

tionary Time Series, J. Wiley, 1949.

SUBMITTED: March 29, 1961

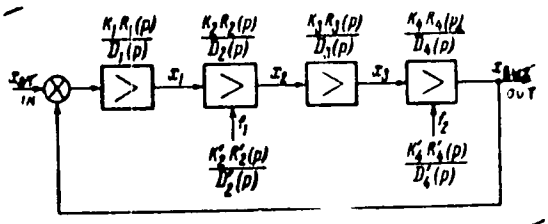

Fig. 1

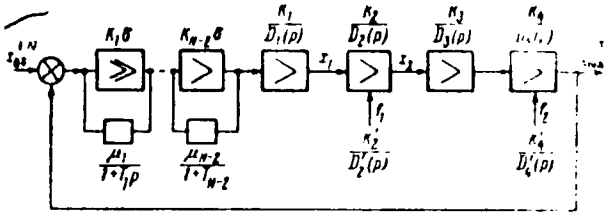

Fig. 2

Card 6/6

APPROVED FOR RELEASE: 07/19/2001 CIA-RDP86-00513R001033720013-1"

"APPROVED FOR RELEASE: 07/19/2001 CIA-RDP86-00513R001033720013-1

25846 S/020/61/139/004/006/025
B104/B231

16.8000 (1031, 1121, 1344)

AUTHOR: Meyerov, M. V.

TITLE: Structural noise stability of a class of closed dynamic systems

PERIODICAL: Akademiya nauk SSSR. Doklady, v. 139, no. 4, 1961, 827-829

TEXT: Subject of investigation is a closed dynamic system which, in special cases, is equivalent to automatic control systems or other systems with negative feedback. The system consists of N components with the transmission functions $K_i R_i(P)/D_i(P)$. For reasons of simplifying the mathematical treatment of the problem under investigation, it is assumed that the total number of components subjected to noise action amounts to $\alpha + m$, the components being arranged at different spots of the feedback circuit. The α components are supposed to be placed at one spot and the remaining m elements at another; between α and m β elements are interposed, which are not subjected to the action of a noise. The results obtained under these conditions can easily be applied to any arrangement of the components. Studies conducted here are based on the condition that at the input the

Card 1/6

APPROVED FOR RELEASE: 07/19/2001 CIA-RDP86-00513R001033720013-1"

"APPROVED FOR RELEASE: 07/19/2001 CIA-RDP86-00513R001033720013-1

useful signal is undisturbed, and that the first v components are not subjected to the action of a noise. Since the noise acts not only on the input of a component, it may be assumed that the transmission function from the output of a given component to a spot where the noise is acting differs from the transmission function of this component. This kind of transmission function is denoted by $K_i'R_i'(P)/D_i'(P)$. A schematic representation is shown in Fig. 1. The author proves the following property of the systems under investigation, which he refers to as structural noise stability: The degree of accuracy obtainable in the reproduction of a useful signal applied to the input of a system will be the greater the greater is the amplification factor of those components which are not subjected to noise action; suppression of noise is caused by such components of the dynamic circuit as are subjected to the action of noise. To furnish proof of this statement, the transmission function of the system shown in Fig. 1 is derived.

$$x_{i+1} = \frac{K_i R_i(P)}{D_i(P)} x_i. \qquad (1)$$

APPROVED FOR RELEASE: 07/19/2001 CIA-RDP86-00513R001033720013-1"

"APPROVED FOR RELEASE: 07/19/2001 CIA-RDP86-00513R001033720013-1

holds for components that are not subjected to the action of noise while

$$x_{l+1} = \frac{K_l R_l(P)}{D_l(P)} x_l + \frac{K_l' R_l'(P)}{D_l(P)} f_l. \qquad (2)$$

is valid for components that are subjected to noise action. By denoting the useful signal by $x_{эт}$ and the output signal by $x_{вых}$,

$$\left[\prod_{l=1}^{\nu+\alpha+\beta+m} \frac{K_l R_l(P)}{D_l(P)} \frac{K_n R_n(P)}{D_n(P)} + 1\right] x_{вых} = \prod_{l=1}^{\nu+\alpha+\beta+m} \frac{K_l R_l(P)}{D_l(P)} \frac{K_n R_n(P)}{D_n(P)} x_{эт} +$$
$$+ \frac{K_n R_n(P)}{D_n(P)} \prod_{l=\alpha+1}^{\beta+m} \frac{K_l R_l(P)}{D_l(P)} \sum_{l=\alpha+1}^{\alpha+l} \prod_{\rho=l}^{\alpha} \frac{K_{\nu+\rho} R_{\nu+\rho}(P)}{D_{\nu+\rho}(P)} \frac{K'_{\nu+l-1} R'_{\nu+l-1}(P)}{D'_{\nu+l-1}} f_{l-1} +$$
$$+ \frac{K_n R_n(P)}{D_n(P)} \sum_{l=2}^{m+1} \prod_{\rho=l}^{m} \frac{K_{\nu+\alpha+\beta+l}}{D_{\nu+\alpha+\beta+l}(P)} \frac{K'_{\nu+\alpha+\beta+l-1} R'_{\nu+\alpha+\beta+l-1}}{D'_{\nu+\alpha+\beta+l-1}} f_{\alpha+l-1} +$$
$$+ \frac{K'_n R'_n(P)}{D'_n(P)} f_n. \qquad (3)$$

APPROVED FOR RELEASE: 07/19/2001 CIA-RDP86-00513R001033720013-1"

"APPROVED FOR RELEASE: 07/19/2001 CIA-RDP86-00513R001033720013-1

is obtained for the output quantities on the basis of Fig. 1, which may be written as

$$m^{\nu+\beta} \prod_{i=1}^{\nu+\alpha+\beta+m} D_i(P) \prod_{l=\nu+1}^{\alpha} D_l'(P) \prod_{\rho=\nu+\alpha+\beta+1}^{m} D_\rho'(P) D_n(P) +$$

$$+ K_n R_n(P) D_n'(P) \prod_{l=\nu+1}^{\alpha} K_l R_l(P) \prod_{l=\nu+1}^{\alpha} D_l'(P) \prod_{l=\nu+\alpha+\beta+1}^{m} K_l R_l(P) \times$$

$$\times \prod_{\rho=\nu+\alpha+\beta+1}^{m} D_\rho'(P)\Big] x_{\text{вых}} = K_n R_n(P) D_n'(P) \prod_{l=\nu+1}^{\alpha} K_l R_l(P) \prod_{l=\nu+\alpha+\beta+1}^{\alpha} K_l R_l(P) \times$$

$$\times \prod_{l=\nu+1}^{\alpha} D_l'(P) \prod_{\rho=\nu+\alpha+\beta+1}^{m} D_\rho'(P) x_{\text{вт}} + m^{\nu} K_n R_n(P) \prod_{l=\alpha+1}^{\beta+m} R_l(P) \times$$

$$\times \sum_{\rho=1}^{\alpha} \prod K_{\nu+\rho} R_{\nu+\rho}(P) K_{\nu+l-1}' R_{\nu+l-1}'(P) \prod_{l=1}^{\nu+\alpha} D_l(P) \Big\{ D_{\nu+1}(P) +$$

$$+ D_{\nu+2}(P) D_{\nu+1}(P) + \ldots + \prod_{\nu=1}^{\alpha+\beta} D_l(P) \Big\} \prod_{l=\nu+1}^{\alpha} D_l'(P) \prod_{l=\nu+\alpha+\beta+l}^{m} D_l'(P) f_{l-1} +$$

$$+ m^{\nu+\beta} K_n R_n(P) \prod_{l=1}^{\nu+\alpha+\beta} D_l(P) \Big[D_{\nu+\alpha+\beta}(P) + D_{\nu+\alpha+\rho}(P) + D_{\nu+\alpha+\beta+1}(P) + \ldots$$

APPROVED FOR RELEASE: 07/19/2001 CIA-RDP86-00513R001033720013-1"

"APPROVED FOR RELEASE: 07/19/2001 CIA-RDP86-00513R001033720013-1

$$\ldots + \prod_{l=1}^{m} D_{\nu+\alpha+\beta+l}(P)\Big]\sum_{l=2}^{m+1}\prod_{\rho=1}^{m} K_{\nu+\alpha+\beta+l} R_{\nu+\alpha+\beta+l}(P) \prod_{l=\nu+1}^{\alpha} D_l'(P) \times$$

$$\times \prod_{\substack{l=\nu+\alpha+\beta+l \\ \nu+\alpha+\beta+m}} D'(P) K'_{\nu+\alpha+\beta+l-1} R'_{\nu+\alpha+\beta+l-1}(P) f_{\alpha+l-1} +$$

$$+ m^{\nu+\beta} \prod_{l=1} D_l(P) \prod_{l=\nu+1}^{\alpha} D_l'(P) \prod_{l=\nu+\alpha+\beta+1}^{m} D_l'(P) K_n' R_n(P) f_n.$$

provided that $1/k = m$ and that the amplification factors of such components as are not subjected to noise action are sufficiently great. This results in $\lim x_{\text{вых}} = x_{\text{зт}}$. It is thus obvious that noise occurs the more intensely the farther is that component away from the input, which is subjected to noise action, the greater is the number of preceding components which are not directly subjected to noise action, and the greater is their amplification factor. There are 1 figure and 1 Soviet-bloc reference.

ASSOCIATION: Institut avtomatiki i telemekhaniki Akademii nauk SSSR (Institute of Automation and Telemechanics of the Academy of

APPROVED FOR RELEASE: 07/19/2001 CIA-RDP86-00513R001033720013-1"

"APPROVED FOR RELEASE: 07/19/2001 CIA-RDP86-00513R001033720013-1

S/020/61/139/004/006/025
B104/B231

Structural noise stability of ...

Sciences USSR)

PRESENTED: March 18, 1961, by B. N. Petrov, Academician

SUBMITTED: March 16, 1961

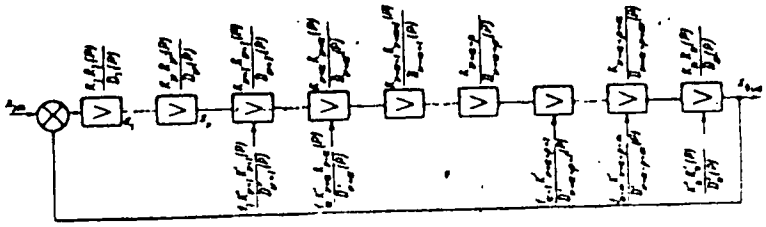

Card 6/6

APPROVED FOR RELEASE: 07/19/2001 CIA-RDP86-00513R001033720013-1"

"APPROVED FOR RELEASE: 07/19/2001 CIA-RDP86-00513R001033720013-1

43820

S/020/62/147/005/010/032
B116/B102

AUTHOR: Meyerov, M. V.

TITLE: Synthesis of systems with rigid structures, which are equivalent to self-adaptive systems

PERIODICAL: Akademiya nauk SSSR. Doklady, v. 147, no. 5, 1962, 1045-1047

TEXT: This is a study of controlled objects whose optimum performance is disturbed: (1) by external disturbances changing the characteristics of the object; (2) by self-induced changes in the characteristics. The resulting structure is assumed to be equivalent to a self-adaptive system, when, in case (1), the processes in the system are independent of external disturbances and when, in case (2), the sensitivity $S^{K(P)}_{m_2(P)}$ according to H. Bode (Network analysis and feedback amplifier design) does not depend on the transient function of the object. The quality factor of the system is not studied. It is essential that a

Card 1/4

APPROVED FOR RELEASE: 07/19/2001 CIA-RDP86-00513R001033720013-1"

"APPROVED FOR RELEASE: 07/19/2001 CIA-RDP86-00513R001033720013-1

q-factor was chosen which in principle can be applied for the object characteristics without taking disturbances into account. Three cases are studied: (1) Measurable disturbances changing the object characteristics. (Fig. 1, without dashed line). $W_2(P)$ is the transient function of the object, $KW_1(P)$ and $W_3(P)$ are the transient functions of the control system and of the stabilizer, respectively. The latter are chosen such that optimum performance without disturbances is reached at a sufficiently high amplification factor K. The structure is chosen such that stability is reached when K tends to infinity. If K is sufficiently high, the structure in Fig. 1 without disturbances is proved to be equivalent to that with disturbances (dashed line). This means that such a system behaves like a self-adaptive one. It does not change its characteristics despite disturbances. External disturbances are compensated automatically. (2) Disturbances that change the object characteristics cannot be measured. The undisturbed object characteristics are assumed to be known. Fig. 1 is supplemented according to Fig. 2: The object model with $W_2(P)$ is introduced. Such a system is proved to behave like a self-adaptive one. (3) Self-induced changes in the object characteristics. The structure

APPROVED FOR RELEASE: 07/19/2001 CIA-RDP86-00513R001033720013-1"

"APPROVED FOR RELEASE: 07/19/2001 CIA-RDP86-00513R001033720013-1

of the control system must be chosen such that the required performance depends only slightly on the changes in the object characteristics. The sensitivity $S^{K(P)}_{W_2(P)}$ can be used to estimate the effect of the change in the object characteristics on the performance. K(P) is the transient function of the whole system and $W_2(P)$ is that of the object. The system is ideal when $S^{K(P)}_{W_2(P)} \to 0$. Structures that become stable at $K = \infty$ and by introducing derivatives according to a method given by the author (Avtomatika i telemekh., 22, no. 10 (1961)) are self-adaptive systems (a typical case is shown in Fig. 3). In the general case of structures stable at $K = \infty$, performance becomes independent of the change in the object characteristics when an additional object model with invariable characteristics is introduced. There are 3 figures.

ASSOCIATION: Institut avtomatiki i telemekhaniki Gosudarstvennogo komiteta Soveta Ministrov SSSR po avtomatizatsii i mashinostroyeniyu i Akademii nauk SSSR (Institute of Automation and Telemechanics of the State Committee of the Council of Ministers of the USSR for Automation and Mechanical Engineering and of the

APPROVED FOR RELEASE: 07/19/2001 CIA-RDP86-00513R001033720013-1"

"APPROVED FOR RELEASE: 07/19/2001 CIA-RDP86-00513R001033720013-1

Academy of Sciences USSR)

PRESENTED: April 28, 1962, by B. N. Petrov, Academician

SUBMITTED: April 23, 1962

Fig. 1. ; Fig. 2. Legend: вх = inlet, вс/х = outlet.

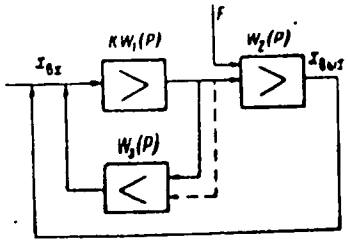

Fig. 1

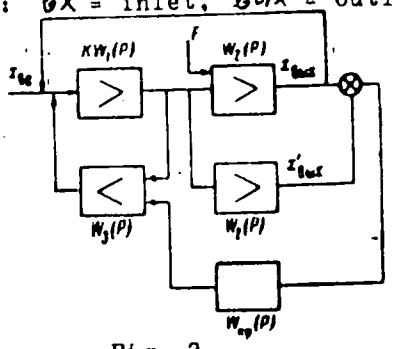

Fig. 2

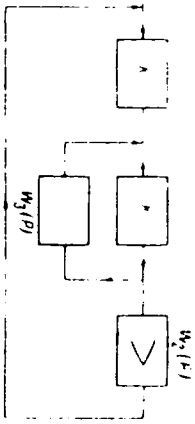

Fig. 3

Card 4/4

APPROVED FOR RELEASE: 07/19/2001 CIA-RDP86-00513R001033720013-1"

"APPROVED FOR RELEASE: 07/19/2001 CIA-RDP86-00513R001033720013-1

MEYEROV, Mikhail

"Synphesis of Systems with Fixed Structures of Equivalent Self-Adjusting Systems."

Paper to be presented at the IFAC Congress held in Basel, Switzerland, 27 Aug to 4 Sep 63

APPROVED FOR RELEASE: 07/19/2001 CIA-RDP86-00513R001033720013-1"

"APPROVED FOR RELEASE: 07/19/2001 CIA-RDP86-00513R001033720013-1

MEYEROV, Mikhail Vladimirovich; DIANOV, Vladimir Gavrilovich; GOR'KOVA, A.A., ved. red.; VORONOVA, V.V., tekhn. red.

[Theory of automatic control and automatic controllers] Teoriia avtomaticheskogo regulirovaniia i avtoreguliatory. Moskva, Gostoptekhizdat, 1963. 416 p. (MIRA 16:9)
(Automatic control)

APPROVED FOR RELEASE: 07/19/2001 CIA-RDP86-00513R001033720013-1"

"APPROVED FOR RELEASE: 07/19/2001 CIA-RDP86-00513R001033720013-1

L 10486-63 EWT(d)/BDS--AFFTC/APGC/ASD--Pg-4/Pk-4/Pl-4/Po-4/Pq-4--
BC/TJP(C)
ACCESSION NR: AP3000466 S/0103/63/024/005/0628/0639

AUTHOR: Meyerov, M. V. (Moscow)

74

TITLE: Multiloop combined control systems

SOURCE: Avtomatika i telemekhanika, v. 24, no. 5, 1963, 628-639

TOPIC TAGS: multiloop control system, controlled variable invariance, absolute variance, Epsilon-accuracy invariance

ABSTRACT: The article studies the problem of selecting the most rational structure and parameters of multiloop combined control systems (control systems are called combined when the principle of deviation control and the principle of disturbance control are used simultaneously) using the invariance (independence) of a given controlled variable on the totality of disturbances as the criterion of the selection. A set of equations describing the multiloop combined control system with n control variables is derived with which an explicit expression for any controlled variable y_1 may be written. The possibility of realizing the invariance of a controlled variable is investigated. Invariance conditions are derived in the form of a system of

Card 1/2

APPROVED FOR RELEASE: 07/19/2001 CIA-RDP86-00513R001033720013-1"

"APPROVED FOR RELEASE: 07/19/2001 CIA-RDP86-00513R001033720013-1

L 10486-63
ACCESSION NR: AP3000466

equations, which is analyzed first for the case of a simple multiloop system constructed on the principle of deviation control alone. It is shown that in this case the absolute invariance cannot be realized; it can be achieved only when the multiloop system is combined. Conditions for the realization of a simple multiloop system with ε-accuracy are derived. The realization with ε-accuracy of the invariance of multiloop combined systems is investigated, and it is proved that the invariance of such systems can be realized with ε-accuracy when the structure of a constructed system belongs to a class of structures which are stable when the amplification coefficient increases without bounds. Orig. art. has: 5 figures and 49 formulas.

ASSOCIATION: none

SUBMITTED: 06Oct62 DATE ACQ: 12Jun63 ENCL: 00

SUB CODE: MM, CO NO REF SOV: 009 OTHER: 000

ss/gd
Card 2/2

APPROVED FOR RELEASE: 07/19/2001 CIA-RDP86-00513R001033720013-1"

"APPROVED FOR RELEASE: 07/19/2001 CIA-RDP86-00513R001033720013-1

KHRAMOY, A.V. [deceased]; MEYEROV, M.V.; AYZERMAN, M.A.; ULANOV, G.M.; TSYPKIN, Ya.Z.; FEL'DBA'IM, A.A.; LERNER, A.Ya.; PUGACHEV, V.S.; IL'IN, V.A.; GAVRILOV, M.A.

Work of the Institute of Automatic and Remote Control on the development of the theory of automatic control during 1939-1964. Avtom. i telem. 25 no. 6:763-807 Je '64. (MIRA 17:7)

APPROVED FOR RELEASE: 07/19/2001 CIA-RDP86-00513R001033720013-1"

"APPROVED FOR RELEASE: 07/19/2001 CIA-RDP86-00513R001033720013-1

AVEN, O.A.; DVORETSKIY, V.M.; DOMANITSKIY, S.M.; ZALMANZON, L.A.; KRASSOV, I.M.; KRUG, Ye.K.; TAL', A.A.; KHOKHLOV, V.A.; BULGAKOV, A.A.; DEMIDENKO, Ye.D.; BERNSHTEYN, S.I.; YEMEL'YANOV, S.V.; LERNER, A.Ya.; MEYEROV, M.V.; PEREL'MAN, I.I., FITSNER, L.N.; CHELYUSTKIN, A.B.; ZHOZHIKASHVILI, V.A.; IL'IN, V.A.; AGEYKIN, D.I.; GUSHCHIN, Yu.V.; KATYS, G.P.; MEL'TTSER, L.V.; PARKHOMENKO, P.P.; MIKHAYLOV, N.N.; FITSNER, L.N.; PARKHOMENKO, P.P.; ROZENBLAT, M.A.; SOTSKOV, B.S.; VASIL'YEVA, N.P.; PRANGISHVILI, I.V.; POLONNIKOV, D.Ye.; VOROB'YEVA, T.M.; DEKABRUN, I.Ye.

Work on the development of systems and principles of automatic control at the Institute of Automatic and Remote Control during 1939-1964. Avtom. i telem. 25 no. 6:807-851 Je '64. (MIRA 17:7)

APPROVED FOR RELEASE: 07/19/2001 CIA-RDP86-00513R001033720013-1"

"APPROVED FOR RELEASE: 07/19/2001 CIA-RDP86-00513R001033720013-1

MEYEROV, M.V., doktor tekhn. nauk

Scientific Session on Automation. Vest. AN SSSR 34 no.5: 130-131 My '64. (MIRA 17:6)

APPROVED FOR RELEASE: 07/19/2001 CIA-RDP86-00513R001033720013-1"

"APPROVED FOR RELEASE: 07/19/2001 CIA-RDP86-00513R001033720013-1

MEYEROV, M.V., prof.

Symposium on the theory of the sensitivity of automatic control systems in Yugoslavia. Vest. AN SSSR 34 no.1:89 Ja '64. (MIRA 18:2)

APPROVED FOR RELEASE: 07/19/2001 CIA-RDP86-00513R001033720013-1"

"APPROVED FOR RELEASE: 07/19/2001 CIA-RDP86-00513R001033720013-1

MEYEROV, M.V.

Some theoretical problems of automation in the petroleum, petrochemical, and gas industries. Trudy MINKHiGP no.52: 3-8 '64. (MIRA 18:6)

APPROVED FOR RELEASE: 07/19/2001 CIA-RDP86-00513R001033720013-1"

"APPROVED FOR RELEASE: 07/19/2001 CIA-RDP86-00513R001033720013-1

L 25577-66 EWT(d)/EWP(v)/EWP(k)/EWP(h)/EWP(1)

ACC NR: AM6004771 Monograph UR/

46
B+1

Meyerov, Mikhail Vladimirovich

Multiple loop control systems (Sistemy mnogosvyaznogo regulirovaniya) Moscow, Izd-vo "Nauka", 1965. 384 p. illus., biblio. 6,000 copies printed

TOPIC TAGS: automatic control system, quality control, self adaptive control

PURPOSE AND COVERAGE: The book is devoted to the theory of systems for automatic control of a large number of regulated quantities, such as complicated machinery and processes in which the output of the machine or the overall characteristics of the production quality depend simultaneously on all the ajustable quantities. The main properties of multiple-loop control systems used for this purpose are described, and the various existing methods for the investigation of such systems are estimated. The book consists of a mathematical description of some typical objects and systems of multiple-loop control, derivation of the equations of the control system for various cases, general structural properties of multiple-loop control systems, combined systems, autonomy and invariance of control systems, methods of system synthesis to obtain certain specified structures, and variational problems dealing with multiple-loop control systems. Author thanks Professor A. A. Fel'dbaum for reviewing the book and for many valuable remarks which contributed to its improvement.

TABLE OF CONTENTS [abridged]:

Foreword - - 7
Introduction - - 11

Card 1/2 UDC: 62-50

APPROVED FOR RELEASE: 07/19/2001 CIA-RDP86-00513R001033720013-1"

"APPROVED FOR RELEASE: 07/19/2001 CIA-RDP86-00513R001033720013-1

L 25577-66

ACC NR: AM6004771

Ch. I. Examples of systems of multiple-loop regulation - - 19
Ch. II. Systems of multiple-loop regulation consisting of principal elements - - 50
Ch. III. Structures of multiple-loop regulation systems - - 85
Ch. IV. General properties of multiple-loop control systems which are stable when the gains of the individual loops are increased without limit - - 128
Ch. V. Combined multiple-loop control systems - - 175
Ch. VI. Problem of invariance and autonomy of multiple-loop control systems - - 205
Ch. VII. Methods of synthesis of system with rigid structure, which are equivalent in the properties to self-adaptive systems - - 255
Ch. VIII. Variational aspect of the problem of multiple-loop control - - 334
Literature - - 381

SUB CODE: 14, 13/ SUBM DATE: 05Jun65/ ORIG REF: 075/ OTH REF: 011

Card 2/2 FW

APPROVED FOR RELEASE: 07/19/2001 CIA-RDP86-00513R001033720013-1"

"APPROVED FOR RELEASE: 07/19/2001 CIA-RDP86-00513R001033720013-1

L 38986-66 EWT(d)/EWP(k)/EWP(h)/EWT(v)/EWP(1) BC

ACC NR: AP6003166 SOURCE CODE: UR/0030/65/000/012/0077/0078

AUTHOR: Meyerov, M. V. (Doctor of technical sciences); Utkin, V. I. (Candidate of technical sciences)

ORG: none

TITLE: International conference on multivariate and discrete automatic control systems held in Prague on 9 - 12 June, 1965

SOURCE: AN SSSR. Vestnik, no. 12, 1965, 77-78

TOPIC TAGS: automatic control system, scientific conference, international conference

ABSTRACT: The International Conference on Multivariate and Discrete Automatic Control Systems was held in Prague from 9 to 12 June, 1965 within the framework of the member nations of the Union of Economic Cooperation. Represented at the conference were Bulgaria, Hungary, the German Democratic Republic, Poland, the Soviet Union, Czechoslovakia. Reports were read at the plenary session by Ya. Plugarzh, Chief Scientific Secretary of the Czechslovakian Academy of Sciences, dealing with a historic survey of the problems engaging the attention of the conference, and by V. Streyts on the contemporary theory of multivariate and discrete systems. Three sections were set up. Within the section dealing with the synthesis

Card 1/2

APPROVED FOR RELEASE: 07/19/2001 CIA-RDP86-00513R001033720013-1"

"APPROVED FOR RELEASE: 07/19/2001 CIA-RDP86-00513R001033720013-1

L 38986-66

ACC NR: AP6003166

of multivariate automatic control systems a number of participants dealt with the invariantness of multivariate and essentially nonlinear automatic control systems and with methods for the optimization of multiply-connected systems. Particular attention was directed at control mechanism design and stability. At the meetings of the section on discrete automatic control systems and variable-structure systems the majority of the papers involved the theory of discrete systems, and problems on the realization of discrete devices and systems. A few dealt with the practical applications of the methods discussed. The majority of the reports were of great interest on the theoretical plane and attested to the high state-of-the-art in the countries represented.

SUB CODE: 05,09,13/ SUBM DATE: None

Card 2/2

APPROVED FOR RELEASE: 07/19/2001 CIA-RDP86-00513R001033720013-1"

"APPROVED FOR RELEASE: 07/19/2001 CIA-RDP86-00513R001033720013-1

MEYEROV, M.V. (Moskva); SALIMZHANOV, E.S. (Moskva)

Some problems of the theory of oil well production control. Izv. AN SSSR. otd. tekh. nauk. tekh. kib. no.3:81-93 My-Je '63. (MIRA 16:7)

(Petroleum production)

APPROVED FOR RELEASE: 07/19/2001 CIA-RDP86-00513R001033720013-1"

"APPROVED FOR RELEASE: 07/19/2001 CIA-RDP86-00513R001033720013-1

L 13177-66 EWT(d)/EWP(v)/EWP(k)/EWP(h)/EWP(1)

ACC NR: AP6001720 SOURCE CODE: UR/0020/65/165/004/0780/0782

38

B

AUTHOR: Meyerov, M. V.

ORG: Institute of Automation and Remote Control (Institut avtomatiki i telemekhaniki)

TITLE: Analytic conditions for positiveness in a real function

SOURCE: AN SSSR. Doklady, v. 165, no. 4, 1965, 780-782

TOPIC TAGS: automatic control theory, mathematic analysis, real function

14

ABSTRACT: The author gives some examples of important problems in automatic control theory and network theory which may be reduced to finding conditions for positiveness in real functions. It is shown that conditions for realization of real positive functions are determined by finding conditions for stability of the equation

$$Q(p) + KR(p) = 0$$

where K is a finite positive number or infinity. The problem is formulated as follows: find the conditions under which the region of stability in the plane of the complex parameter $\bar{K}$ is the entire real positive axis. Necessary and sufficient conditions are found such that the D-partition curve never intersects the real axis K in the $\bar{K}$-plane, in lattices which are stable when $K \to \infty$. These conditions take the following form:

$$\sum_{0}^{n} a_k \omega^{2k} = 0.$$

Card 1/2

APPROVED FOR RELEASE: 07/19/2001 CIA-RDP86-00513R001033720013-1"

"APPROVED FOR RELEASE: 07/19/2001 CIA-RDP86-00513R001033720013-1

L 13177-66

ACC NR: AP6001720

for the general case if zero roots are omitted. A determinant is derived for the coefficients of this polynomial which can be used for mechanical elimination of real numbers for which the function is zero. Presented by Academician B. N. Petrov. Orig. art. has: 14 formulas.

SUB CODE: 12, 13 / SUBM DATE: 08Apr65 / ORIG REF: 006

Card 2/2

APPROVED FOR RELEASE: 07/19/2001 CIA-RDP86-00513R001033720013-1"

"APPROVED FOR RELEASE: 07/19/2001 CIA-RDP86-00513R001033720013-1

MEYMEROV, V.D.

Device for lubricating the top cylinder bearings of the "Ideal Rip" automatic two-cylinder circular hosiery knitting machine. Obm.tekh.opyt. [MLP] no.36:21 '56. (MIRA 11:11)
(Knitting machines--Lubrication)

APPROVED FOR RELEASE: 07/19/2001 CIA-RDP86-00513R001033720013-1"

"APPROVED FOR RELEASE: 07/19/2001 CIA-RDP86-00513R001033720013-1

MEYEROV, Ya., tokar' zavoda "Ilmarine." (g. Tallinn).

My automatic screw-cutting machine. Tekh.mol.22 no.2:10 F '54. (MLRA 7:2)

(Screw-cutting machines)

APPROVED FOR RELEASE: 07/19/2001 CIA-RDP86-00513R001033720013-1"

"APPROVED FOR RELEASE: 07/19/2001 CIA-RDP86-00513R001033720013-1

1. MEYEROV, Ya. S., Eng.

2. USSR (600)

4. Milling Machinery

7. Increasing the productivity of a suction fan, Masl. -zhir. prom. 18, No. 4, 1953.

9. Monthly List of Russian Accessions, Library of Congress, April 1953, Uncl.

APPROVED FOR RELEASE: 07/19/2001 CIA-RDP86-00513R001033720013-1"

"APPROVED FOR RELEASE: 07/19/2001 CIA-RDP86-00513R001033720013-1

KOPEYKOVSKIY, V.M., kandidat tekhnicheskikh nauk, dotsent; SHCHERBAKOV, V.G., inzhener; MEYEROV, Ya.S., inzhener.

Storage of oil rich sunflower seeds in elevators. Masl.-zhir. prom. 21 no.3:5-7 '56. (MLRA 9:8)

1. Krasnodarskiy institut pishchevoy promyshlennosti (for Kopeykovskiy, Shcherbakov); 2. Krasnodarskiy masloshirkombinat (for Meyerov).

(Sunflower seed--Storage)

APPROVED FOR RELEASE: 07/19/2001 CIA-RDP86-00513R001033720013-1"

"APPROVED FOR RELEASE: 07/19/2001 CIA-RDP86-00513R001033720013-1

MEYEROV, Ya.S., inzhener.

Mechanized bottling of vegetable oil. Masl.-zhir.prom. 23 no.7:40-41 '57. (MLRA 10:8)

1.Krasnodarskiy maslozhirkombinat.
(Oil industries--Equipment and supplies)
(Bottling)

APPROVED FOR RELEASE: 07/19/2001 CIA-RDP86-00513R001033720013-1"

"APPROVED FOR RELEASE: 07/19/2001 CIA-RDP86-00513R001033720013-1

MEYEROV, Ya.S., insh.

Using steam jet pumps for the deodorization of fats. Masl.-zhir. prom. 23 no.9:39 '57. (MIRA 10:12)

1.Krasnodarskiy maslozhirkombinat.
(Oils and fats)
(Vacuum pumps)

APPROVED FOR RELEASE: 07/19/2001 CIA-RDP86-00513R001033720013-1"

"APPROVED FOR RELEASE: 07/19/2001 CIA-RDP86-00513R001033720013-1

MEYEROV, Ya.S., inzh.; SKOROBOGATAYA, N.Ya., inzh.

Development of the Krasnodar Oils and Fats Combine during the years of the Soviet regime. Masl.-zhir. pron. 23 no.11:23-25 '57. (MIRA 11:1)
(Krasnodar--Oils and fats--History)

APPROVED FOR RELEASE: 07/19/2001 CIA-RDP86-00513R001033720013-1"

"APPROVED FOR RELEASE: 07/19/2001 CIA-RDP86-00513R001033720013-1

POPOV, K.S., kand. tekhn. nauk; BEZUGLOV, M.I., inzh.; MEYEROV, Ye. S., inzh.

Purification of raw vegetable phosphatides. Masl.-zhir. prom. 24 no. 6:3-7 '58. (MIRA 11:7)

1. Vsesoyuznyy nauchno-issledovatel'skiy institut zhirov(for Popov).
2. Krasnodarskiy maslozhirnovoy kombinat(for Bezuglov, Meyerov).
(Phosphatides)

APPROVED FOR RELEASE: 07/19/2001 CIA-RDP86-00513R001033720013-1"

"APPROVED FOR RELEASE: 07/19/2001 CIA-RDP86-00513R001033720013-1

ACC NR: AT7003858 (A) SOURCE CODE: UR/3241/65/002/000/0085/0087

AUTHOR: Meyerov, Ya. S.; Titova, T. G.; Kleshchenko, V. S.

ORG: none

TITLE: Deodorization of whale oil

SOURCE: Krasnodar. Nauchno-issledovatel'skiy institut pishchevoy promyshlennosti. Trudy, v. 2, 1965, 85-87

TOPIC TAGS: processed animal product, hydrogenation, hydrogenated fat, aldehyde, ketone, spectrophotometer/SF-5 spectrophotometer

ABSTRACT: Laboratory tests were made to find the effect of whale oil deodorization prior to hydrogenation and to study the composition of odor imparting substances separated from the oil during deodorization using superheated steam under vacuum. Refined, unrefined and hydrogenated batches of whale oil each 600 cm^3 were deodorized and the results are presented in tabular form in the original article. The substances separated were identified with the use of an SF-15 spectrophotometer. It was found that deodorization of whale oil eliminates aldehydes, ketones and nitrogenous and non-saponifying substances. The content

Card 1/2

APPROVED FOR RELEASE: 07/19/2001 CIA-RDP86-00513R001033720013-1"

"APPROVED FOR RELEASE: 07/19/2001 CIA-RDP86-00513R001033720013-1

ACC NR: AT7003858

of carbonyl compounds in the deodorization fractions of hydrogenated oil is considerably less than in deodorization fractions of whale oil. It was found practical to deodorize the whale oil prior to hydrogenation. A unit for the preliminary deodorization of whale oil prior to hydrogenation has been installed at the hydrogenation plant of the Krasnodar Oil and Fats Complex. Deodorization of whale oil prior to hydrogenation does not eliminate the need for deodorizing the hydrogenated whale oil in margarine plants. Orig. art. has: 1 table. [GC]

SUB CODE: 11/SUBM DATE: none/ORIG REF: 005/

Card 2/2

APPROVED FOR RELEASE: 07/19/2001 CIA-RDP86-00513R001033720013-1"

"APPROVED FOR RELEASE: 07/19/2001 CIA-RDP86-00513R001033720013-1

1. BOGDANOV, V. I. and MEYEROV, Z. S.

2. USSR (600)

4. Kutateladze, S. S.

7. "Survey of the work of Russian scientists and engineers in the field of boiler technology." S. S. Kutateladze, R. V. TSukerman. Reviewed by V. I. Bogdanov, Z. S. Meyerov. Sov.kniga no. 11, 1952.

9. Monthly List of Russian Accessions, Library of Congress, February 1953. Unclassified

APPROVED FOR RELEASE: 07/19/2001 CIA-RDP86-00513R001033720013-1"

"APPROVED FOR RELEASE: 07/19/2001 CIA-RDP86-00513R001033720013-1

POMUKHIN, Vladimir Petrovich; SEMENOV, I.M., inzh.-korablestroitel', spets.red.; MEYEROVA, L.L., otv. za vypusk; NASHIVOCHNIKOV, N.I., tekhn.red.

[Increasing the intervals between engine repairs of fishing trawlers] Ob uvelichenii mezhremontnykh periodov dvigatelei rybolovnykh traulerov. Kaliningrad, Biuro tekhn.informatsii, 1960. 103 p. (MIRA 14:1)
(Marine engines) (Fishing boats)

APPROVED FOR RELEASE: 07/19/2001 CIA-RDP86-00513R001033720013-1"

"APPROVED FOR RELEASE: 07/19/2001 CIA-RDP86-00513R001033720013-1

MEYEROVA, R.A. (Irkutsk)

Localization patterns and pathogenesis of gunshot injuries of the brachial plexus. Vop.neirokhir. 25 no.3:35-38 My-Je '61. (MIRA 14:5)

1. Irkutskaya gorodskaya klinicheskaya bol'nitsa.
(BRACHIAL PLEXUS--WOUNDS AND INJURIES) (GUNSHOT WOUNDS)

APPROVED FOR RELEASE: 07/19/2001 CIA-RDP86-00513R001033720013-1"

"APPROVED FOR RELEASE: 07/19/2001 CIA-RDP86-00513R001033720013-1

26622
Z/011/61/018/001/001/014
E112/E453

53610

AUTHORS: Sokolskaya, A.M. and Meyerovich, A.D.

TITLE: Hydrogenation of nitriles

PERIODICAL: Chemie a chemická technologie, 1961, Vol.18 No.1 p 17 abstract Ch 61-231 (Izv. Akad. Nauk Kazakh SSR Ser Khim. 1960, No.2, pp.93-100)

TEXT: The dinitrile of terephthalic acid was converted to p-xylilene-diamine by hydrogenation over a catalyst consisting of an alloy of 48% Ni 50% Al and 2% Ti. The reaction was carried out in n-butyl alcohol in the presence of ammonia and under pressure. Best yields of p-xylilene-diamine were obtained with 40% of the above catalyst with the addition of ammonia (liquid) at 180 C. 5 literature references.

[Abstractor's note: Complete translation]

Card 1/1

APPROVED FOR RELEASE: 07/19/2001 CIA-RDP86-00513R001033720013-1"

"APPROVED FOR RELEASE: 07/19/2001 CIA-RDP86-00513R001033720013-1

MEYEROVICH, B.L.

Late results of surgery in gastric and duodenal ulcer [with summary in English, p.151]. Khirurgiia 33 no.2:34-37 F '57. (MIRA 10:6)

(GASTRECTOMY, in various dis.
peptic ulcer, late results (Rus))

APPROVED FOR RELEASE: 07/19/2001 CIA-RDP86-00513R001033720013-1"

"APPROVED FOR RELEASE: 07/19/2001 CIA-RDP86-00513R001033720013-1

MEYEROVICH, B.L., mayro meditsinskoy sluzhby; MAKHOV, Ye.K., kapitan meditsinskoy sluzhby

Differential diagnosis of march periostitis. Voen.-med.zhur. no.10:71-72 O '59. (MIRA 13:3)
(PERIOSTITIS, diagnosis)
(ARMED FORCES PERSONNEL, diseases)

APPROVED FOR RELEASE: 07/19/2001 CIA-RDP86-00513R001033720013-1"

"APPROVED FOR RELEASE: 07/19/2001 CIA-RDP86-00513R001033720013-1

MEYEROVICH, B. L. (Leningrad)

Hepatopancreatic syndrome following stomach resection. Klin. med. no.6:49-53 '61. (MIRA 14:12)

1. Iz kliniki voyenno-polevoy khirurgii (nach. - prof. A. N. Berkutov) Voyenno-meditsinskoy ordena Lenina akademii imeni S. M. Kirova.

(STOMACH—SURGERY) (LIVER—DISEASES)
(PANCREAS—DISEASES)

APPROVED FOR RELEASE: 07/19/2001 CIA-RDP86-00513R001033720013-1"

"APPROVED FOR RELEASE: 07/19/2001 CIA-RDP86-00513R001033720013-1

MEYEROVICH, B.L. (Leningrad, Lesnoy pr., d.2, korp.5, komm.2)

Late results of resection of the stomach in peptic ulcer. Vest. khir. no.9:32-37 '61. (MIRA 15:3)

1. Iz kliniki voyenno-polevoy khirurgii (nach. - prof. A.N. Berkutov) Voyenno-meditsinskoy ordena Lenina akademii im. S.M. Kirova.

(PEPTIC ULCER) (STOMACH--SURGERY)

APPROVED FOR RELEASE: 07/19/2001 CIA-RDP86-00513R001033720013-1"

"APPROVED FOR RELEASE: 07/19/2001 CIA-RDP86-00513R001033720013-1

MEYEROVICH, B.L.

Pathogenesis of the sp-called dumping syndrome following gastric resection. Khirurgiia 38 no.10:90-96 O '62. (MIRA 15:12)

1. Iz kliniki voyenno-polevoy khirurgii (nach. - prof. A.N. Berkutov) Voyenno-meditsinskoy ordena Lenina akademii imeni S.M. Kirova.

(STOMACH—SURGERY)

APPROVED FOR RELEASE: 07/19/2001 CIA-RDP86-00513R001033720013-1"

"APPROVED FOR RELEASE: 07/19/2001 CIA-RDP86-00513R001033720013-1

MEYEROVICH, B.L., kand. med. nauk, mayor meditsinskoy sluzhby

Some problems of the diagnosis and treatment of acute intestinal obstruction. Voen. med. zhur. no.10:24-27 O '65.

(MIRA 18:11)

APPROVED FOR RELEASE: 07/19/2001 CIA-RDP86-00513R001033720013-1"

"APPROVED FOR RELEASE: 07/19/2001 CIA-RDP86-00513R001033720013-1

1ST AND 2ND ORDERS

PROCESSES AND PROPERTIES INDEX

3RD AND 4TH ORDERS

S A

B 6 a

Geometrical theory of electrical networks. Mathematics. E. A. Elektrotechnika (No. 2) 30-9 (1947) In Russian.—A survey and elaboration of tensor methods applied to electrical networks is presented, based on G. Kron's publications.

A. L.

ASM-SLA METALLURGICAL LITERATURE CLASSIFICATION

APPROVED FOR RELEASE: 07/19/2001 CIA-RDP86-00513R001033720013-1"

"APPROVED FOR RELEASE: 07/19/2001 CIA-RDP86-00513R001033720013-1

MEYEROVICH, E. A.

"On a method of calculating electrical circuits", by Doctor of Technical Sciences E. A. Meyerovich, at the Power Engr. Inst. im KRZHIZHANOVSKIY of the Acad. Sce. USSR.

SO: Elektrichestvo, No 5, Moscow, May 1947 (U-5533)

APPROVED FOR RELEASE: 07/19/2001 CIA-RDP86-00513R001033720013-1"

"APPROVED FOR RELEASE: 07/19/2001 CIA-RDP86-00513R001033720013-1

MEYEROVICH, E. A.

"A new method for solving a system of algebraic equations", by Doctor of Technical Sciences E. A. Meyerovich, at the Power Engr. Inst. im KRZHIZHANOVSKIY of the Acad. Sce. USSR.

SO: Elektrichestvo, No 5, Moscow, May 1947 (U-5533)

APPROVED FOR RELEASE: 07/19/2001 CIA-RDP86-00513R001033720013-1"

"APPROVED FOR RELEASE: 07/19/2001 CIA-RDP86-00513R001033720013-1

MEYEROVICH, E. A.

"The physical basis and certain applications of the geometrical theory of circuits developed by G. Kron", by Doctor of Technical Sciences E. A. Meyerovich, at the Power Engr. Inst. im KRZHIZHANOVSKIY of the Acad. Sce. USSR.

SO: Elektrichestvo, No 5, Moscow, May 1947 (U-5533)

APPROVED FOR RELEASE: 07/19/2001 CIA-RDP86-00513R001033720013-1"

"APPROVED FOR RELEASE: 07/19/2001 CIA-RDP86-00513R001033720013-1

USSR/Mathematics - Operators Feb 49
Electricity
Resonators

PA 33/49T65

"The Operational Method Applied to Electrodynamical Equations in a Limited Three-Dimensional Region," E. A. Meyerovich, Power Eng Inst imeni G. M. Krzhizhanovskiy, Acad Sci USSR, 4 pp

"Iz Ak Nauk SSSR, Otdel Tekh Nauk" No 2

Points out that Adler's solution (by operator method), based on Doetsch's work, of Maxwell's equations is erroneous. Considers oscillations of a field resonator as an example of his solution.

[redacted]

33/49T65

USSR/Mathematics - Operators (Contd) Feb 49

Submitted by Acad G. M. Krzhizhanovskiy, 8 Jul 48.

[redacted]

33/49T65

APPROVED FOR RELEASE: 07/19/2001 CIA-RDP86-00513R001033720013-1"

"APPROVED FOR RELEASE: 07/19/2001 CIA-RDP86-00513R001033720013-1

MEYEROVICH, E. A.

Meerovič, E. A. An operational method applied to the equations of electrodynamics in a bounded three-dimensional region. Izvestiya Akad. Nauk S.S.S.R. Otd. Tekh. Nauk 1949, 186–191 (1949). (Russian)

It is pointed out that the solution of Adler is erroneous [J. Appl. Phys. 16, 545–550 (1945); these Rev. 7, 99]. Adler obtains for the Fourier transform of the derivative of a function the expression

$$F[\varphi'(x)] = (j\pi n/l)F[\varphi(x)] + (-1)^n[\varphi(l) - \varphi(-l)].$$

He gets rid of the boundary values by assuming that the function, defined for $0 < x < l$, is continued for $-l < x < 0$ in an even way: $\varphi(x) = \varphi(-x)$. The boundary values cancel, but the solution obtained in this way does not take cognizance of these boundary values, and this is erroneous. In applying this method to Maxwell's equation, Adler continues the functions E and H differently in the various equations. As a consequence the transformed equations cannot be used as a system of simultaneous equations, and the results are of no value for computational purposes. In conclusion the author solves the problem of a prismoidal cavity resonator, with perfectly conducting boundaries, taking care that each component appears in each of the equations in a similar way, and obtains for the transform of the electrical vector the expression

$$\bar{E}(n, p) = (\bar{n}' \times \mu\bar{H}(n, 0) + \mu\epsilon p\bar{E}(n, 0))/(\epsilon\mu p^2 - n'^2),$$

which defines each harmonic in terms of its boundary values. An expression in terms of the j-variable is also given. The oscillations are undamped since no losses are considered.

M. Danilov (Cambridge, Mass.)

Source: Mathematical Reviews, Vol 10, No. 10

APPROVED FOR RELEASE: 07/19/2001 CIA-RDP86-00513R001033720013-1"

"APPROVED FOR RELEASE: 07/19/2001 CIA-RDP86-00513R001033720013-1

SA

B 64
A

PROCESSES AND PROPERTIES INDEX

621.3.011

1210. Calculation of transient processes in complicated electric circuits. E. A. Mesrovich. *Izv. Akad. Nauk, SSSR, Otdel. Tekh. Nauk, No.* 10, 1475–83 (1950) *In Russian.*

As a rule, transient processes in more complicated and particularly in non-linear circuits with distributed parameters must be treated individually and solved from first principles. The method suggested claims to be sufficiently general to be applied to complicated linear circuits, and those non-linear circuits which can be linearly approximated in sections. It is based on the assumption of a time-function of limited variation, continuous and single-valued and differentiable up to orders which may be neglected, in a given interval. This given function is then replaced by an auxiliary approximating function of periodic character, thus permitting a Fourier expansion, so chosen that even harmonics vanish, which makes the second half-wave the mirror-image of the first with respect to the axis. The resulting expansion in exponential form has complex coefficients. The

ASM SLA METALLURGICAL LITERATURE CLASSIFICATION

APPROVED FOR RELEASE: 07/19/2001 CIA-RDP86-00513R001033720013-1"

"APPROVED FOR RELEASE: 07/19/2001 CIA-RDP86-00513R001033720013-1

MEYEROVICH, E. A., Prof.

PA 196T52

USSR/Electricity - Nonlinear Circuits Sep 51

"The Calculation of Nonlinear Circuits," Prof E. A. Meyerovich, Dr Tech Sci, Power Eng Inst imeni Krzhizhanovskiy, Acad Sci USSR

"Elektrichestvo" No 9, p 67

Discusses the possibility of applying the superposition principle circuits contg non-linear elements. Submitted 29 Dec 50.

196T52

APPROVED FOR RELEASE: 07/19/2001 CIA-RDP86-00513R001033720013-1"

"APPROVED FOR RELEASE: 07/19/2001 CIA-RDP86-00513R001033720013-1

8(0); 14(5) PHASE I BOOK EXPLOITATION SOV/2079

Bondarenko, S. T., B. Kh. Brodskaya, S. N. Lyandres, E. A. Meyerovich, V. I. Pan'kovskiy, and A. D. Reznikov

Primeneniye elektricheskogo toka dlya neposredstvennogo vozdeystviya na plast topliva pri besshakhtnoy podzemnoy gazifikatsii (Use of Electric Current for Direct Action on Solid Fuel Seams in Underground Gasification Without Sinking a Shaft) Moscow, AN SSSR, 1959. 234 p. 1,600 copies printed. Errata slip inserted.

Sponsoring Agency: Akademiya nauk SSSR. Energeticheskiy institut.

Ed.: E. A. Meyerovich, Professor, Doctor of Technical Sciences; Ed. of Publishing House: P. I. Zubkov; Tech. Ed.: T. V. Polyakova.

PURPOSE: This book is intended for specialists in the coal industry concerned with the underground electrocarbonization of coal.

COVERAGE: This book describes the use of electric current for the direct treatment of underground coal beds. The authors maintain that such operations call

Card 1/10

APPROVED FOR RELEASE: 07/19/2001 CIA-RDP86-00513R001033720013-1"

"APPROVED FOR RELEASE: 07/19/2001 CIA-RDP86-00513R001033720013-1

for the use of a high-efficiency unit able to produce sufficient electric power and to effect the release of the chemical constituents in the bed. In dealing with the electrical engineering problems involved in the process the work describes the electrolinking method. The results of field tests in electrolinking are provided in the work. The system of drilling gas-permeable channels from the surface to the fuel bed is described as is the method of directing the fuel gases from the bed to the surface. The electrical conductivity of the channels may be used for subsequent electrothermal fuel processing. Theoretical and laboratory experiments in this field were first started at the Energeticheskiy Institut imeni G. M. Krzhizhanovskogo (Institute of Power Engineering imeni G. M. Krzhizhanovskiy). The first experiments conducted under actual conditions were carried out at the Estonian shale deposits near the town of Kiviyli, the greater part of the work involving experiments on coal. The Institut VNIIPodzemgaz (All-Union Scientific Research Institute of Underground Gas) took an active part in the trials and established a special laboratory for the purpose. The electro-linking method was next applied at the Moscow PGU station on coal beds. Professor E. A. Meyerovich supervised the electrical engineering problems in the book and wrote Chapters 1, 3, and 8. Chapters 2, 6, part of Chapters 4 and 7 were written by S. T. Bondarenko, Candidate of Technical

APPROVED FOR RELEASE: 07/19/2001 CIA-RDP86-00513R001033720013-1"

"APPROVED FOR RELEASE: 07/19/2001 CIA-RDP86-00513R001033720013-1

Sciences (ENIN AN SSSR); Chapters 9, 4, and 7 by M. B. Brodskaya, Candidate of Technical Sciences (Institut Khimii); Chapter 11 by V. I. Pan'kovskiy, Chief Engineer of the Moscow PGU station; Chapter 10 by S. N. Lyandres, Candidate of Technical Sciences (VNIIPodzemgaz). S. P. Vladimirov and V. K. Red'kin (ENIN AN SSSR) contributed data on electrical measurements for Chapter 5; A. D. Reznikov, Chief of the Laboratory of the VNIIPodzemgaz Institute, assisted in compiling the joint reports of the Institute of Power Engineering and VNIIPodzemgaz on operations conducted at the Moscow PGU station. Other personalities mentioned include: Engineers V. A. Matveyev, P. F. Skafa, and I. S. Garkuski (Glavpodzemgaz); Professor N. V. Lavrov, Doctor of Technical Sciences; I. P. Kirichenko, Candidate of Technical Sciences; Professor A. A. Agroskin; P. G. Zubkov, Candidate of Technical Sciences. The Estonian staff consisted of I. G. Kheyl', Acting Member of the Academy of Sciences, Estonian SSR; A. K. Freyberg, Chief Administrator of the Shale and Chemical Industry of Sovnarkhoz of the Estonian Republic; A. T. Kyl', Director of the Institute of Chemistry, Academy of Sciences, and I. S. Feyngol'd, Senior Scientific Worker, Institute of Chemistry, Estonian Republic. There are 60 references: 53 Soviet, 5 English, 1 German and 1 Japanese.

APPROVED FOR RELEASE: 07/19/2001 CIA-RDP86-00513R001033720013-1"

"APPROVED FOR RELEASE: 07/19/2001 CIA-RDP86-00513R001033720013-1

TABLE OF CONTENTS:

Foreword 3

Editor's Foreword 4

Ch. 1. General Nature of the Problem and Conducted Studies 7
1. Status of the problem 8
2. Theoretical and laboratory experiments 10
3. Experiments under actual conditions 11

Ch. 2. Main Electrical Characteristics of Solid Mineral Fuels 12
1. Remarks on the method of measuring the electrical conductivity of a solid fuel 13
2. Measuring electrical conductivity and dielectric constant using a-c at 250 to 300°C 15
3. Measuring resistance at high temperatures using a-c and d-c under atmospheric pressure conditions 20
4. Measuring specific coal resistance under increased ambient pressure 24

APPROVED FOR RELEASE: 07/19/2001 CIA-RDP86-00513R001033720013-1"

"APPROVED FOR RELEASE: 07/19/2001 CIA-RDP86-00513R001033720013-1

5. Data on solid mineral fuels breakdown 27
a) trial method 27
b) results of measurements 28

Ch. 3. Principles of the Initial Channel Formation Theory in the Fuel Bed 31
1. General physical concepts on the process 31
2. General mathematical formulation of the problem 36
3. Simplified procedure without convective heat exchange 40
4. Determining the power of the electrical source 42
5. Nature of the standardized breakdown 45
6. Approximate calculation of the standardized breakdown system 48
7. Essential conditions for starting the process 57

Ch. 4. Laboratory Trials (Experiments) of the Initial Electro-linking Channel Formation Process 63
1. Qualitative nature of results of laboratory experiments 63
2. Description of laboratory installation and trial methods on Estonian shale 67
3. Laboratory tests of the initial channel formation using d-c high voltage pulses 69

APPROVED FOR RELEASE: 07/19/2001 CIA-RDP86-00513R001033720013-1"

"APPROVED FOR RELEASE: 07/19/2001 CIA-RDP86-00513R001033720013-1

SOV/2079

Use of Electric Current for Direct Action (Cont.)

Ch. 6. Expansion of Initial Electrolinking Channel 100
1. Formulating the problem 100
2. Period of preparatory channel heating 103
3. Derivation on approximation equation for the expanding channel process 104
4. Initial expansion stage. Small diameter 107
5. Second stage of large diameter channel expansion with restricted models 108
6. Second stage of channel expansion in unrestricted ambient solid ambient with a self-modeling process and under forced 109
7. Solving the problem of channel expansion in an unrestricted initial and restricted conditions 111
8. Calculating the actual channel temperature 113
9. Energy spent on establishing (creating) a thermal effect range 114
10. Intensity of the channel expansion process. Specific expenditure of energy 116
11. Comparison of theoretical calculations based on experimental data 118
7. Laboratory Trials of the Channel Expansion Process

APPROVED FOR RELEASE: 07/19/2001 CIA-RDP86-00513R001033720013-1"

"APPROVED FOR RELEASE: 07/19/2001 CIA-RDP86-00513R001033720013-1

Use of Electric Current for Direct Action (Cont.) SOV/2079

1. General nature of the process and the object of laboratory trials 118
2. Laboratory trial method of the coked channel expansion process in Estonian shale 119
3. Changes in electrical parameters 121
4. Temperature characteristics 126
5. Speed of channel expansion 127
6. Yield of steam and gas mixture and its effect on the process 127
7. Results of experiments on coal 130

Ch. 8. Investigation of Operating Conditions With an Electrical Model. Electrical Control by the Equivalent Circuit Method. Results of Several Studies Under Actual Conditions 135

1. Experiments on an approximate electrical model 135
2. Parameters of the mesh grid and the measured values 136
3. Results of model gaging 138
4. Equivalent layout of electrode-bed-electrode system 141
5. Results of gaging under actual conditions; group linkage 148

Card 8/10

APPROVED FOR RELEASE: 07/19/2001 CIA-RDP86-00513R001033720013-1"

"APPROVED FOR RELEASE: 07/19/2001 CIA-RDP86-00513R001033720013-1

Use of Electric Current for Direct Action (Cont.) SOV/2079

Ch. 9. Testing the Electrolinking Process in Actual Shale Beds 154
1. Description of beds and results of several actual formation measurements 154
2. Description of high voltage field equipment 155
3. Trial of the electrolinking process in an open bed 155
4. Trial results in an open bed 157
5. Studying the electrolinking of boreholes 161
6. Trial results of electrolinking of boreholes 162
7. Studying the electrolinkage process on small dimension panels 165
8. Trial results of electrolinkage of panels 170
9. Hydrodynamical nature of the commercial batch and evaluation of the change in gas constant of the bed subjected to electrical current 173
10. Electrothermal disintegration 177
11. Opening depleted panels 177
12. Results obtained from opening the BShE-3 panel 182
Ch. 10. Borehole Electrolinking Tests in Actual Conditions at the Lisichansk Coal Deposits 187

Card 9/10

APPROVED FOR RELEASE: 07/19/2001 CIA-RDP86-00513R001033720013-1"

"APPROVED FOR RELEASE: 07/19/2001 CIA-RDP86-00513R001033720013-1

Use of Electric Current for Direct Action (Cont.) SOV/2079

1. Nature of experimental lots subjected to electrolinking 187
2. Pit construction and surface communications 190
3. Electrode construction 190
4. Electrical installations for electrolinking tests (trials) 191
5. Borehole preparation for electrolinking tests 193
6. Test description 194
7. Several results of recent trials and general characteristic of trial results

Ch. 11. Result of Using Commercial Borehole Electrolinking at the Moscow "Podzemgaz" Station 202
1. Geological characteristic of Novo-Basovskoye deposits [Tul'skaya o.] and composition of coal 208
2. Electrical equipment used in borehole linkage 210
3. Borehole construction 213
4. Tests in electrolinking 213
5. Commercial trial of electrolinking method 213
6. Commercial introduction of electrolinking 217
7. Basic conclusions 221

Bibliography 228

Card 10/10

230

TM /fal
8-24-59

APPROVED FOR RELEASE: 07/19/2001 CIA-RDP86-00513R001033720013-1"

"APPROVED FOR RELEASE: 07/19/2001 CIA-RDP86-00513R001033720013-1

185T18

USSR/Electricity - Analyzers 21 Feb 51
Transients

"Calculation of Transient Electromagnetic Conditions in Complex Electrical Systems With Rotating Machines Using an AC Network Analyzer," E. A. Meyerovich, V. D. Taft

"Dok Ak Nauk SSSR" Vol LXXVI, No 6, pp 835-837

Uses method for solving systems of differential eqs by representation of the soln over given interval previously proposed by Meyerovich to solve eqs of transient conditions for rotating

185T18

USSR/Electricity - Analyzers 21 Feb 51
(Contd)

elec mach on ac network analyzer. These eqs ordinarily have variable coeffs. Previously, network analyzer could be used only to solve systems of eqs with sym matrix and const parameters. Submitted 21 Dec 50.

185T18

MEYEROVICH, E. A.

APPROVED FOR RELEASE: 07/19/2001 CIA-RDP86-00513R001033720013-1"

"APPROVED FOR RELEASE: 07/19/2001 CIA-RDP86-00513R001033720013-1

[illegible], [illegible] A.; KUZNETSOV, A. A.

Dynamos

Electrostatic generator with belt conveyer. Elektrichestvo no. [illegible], [illegible]. Doktor Tekhn. Nauk, Prof. Energeticheskiy Institut im. Krzhizhanovskogo AN SSSR.

SO: Monthly List of Russian Accessions, Library of Congress, April 1952, Uncl.

APPROVED FOR RELEASE: 07/19/2001 CIA-RDP86-00513R001033720013-1"

"APPROVED FOR RELEASE: 07/19/2001 CIA-RDP86-00513R001033720013-1

USSR/Electricity - Power Systems Apr 52
Symmetrical Components

"Use of the Method of Symmetrical Components for the Study of Transient Processes in Three-Phase Circuits," Prof E. A. Meyerovich, Dr Tech Sci, Power Eng Inst imeni Krzhizhanovskiy, Acad Sci USSR

PA 228T49

"Elektrichestvo" No 4, pp 19-25

Gives basis to this particular use of the method of sym components with the help of the operator method. Also considers the use of the method in

228T49

conjunction with the method of reduction to steady-state conditions and shows that 2 methods of calcn of practical value are possible. Submitted 7 Dec 51.

MEYEROVICH, E. A.

228T49

APPROVED FOR RELEASE: 07/19/2001 CIA-RDP86-00513R001033720013-1"

"APPROVED FOR RELEASE: 07/19/2001 CIA-RDP86-00513R001033720013-1

USSR/Electricity - Power Systems Aug 52
Calculating Procedures

"Engineering Methods for Calculating Transient Operating Conditions in Complex Electric Power Systems," Prof E. A. Meyerovich, Dr Tech Sci, V. A. Taft, Cand Tech Sci, Power Eng Inst imeni Krzhizhanovskiy, Acad Sci USSR

"Elektrichestvo" No 8, pp 31-38

Analysis of transient operating conditions in systems contg transmission lines and salient-pole machines requires soln of complex systems of differential eqs with const coeffs and variable coeffs, and partial differential eqs.

Author's new procedure of analytical soln is simple and rapid, using network analyzers. Devices based on this procedure have advantages over electrointegrators and arithomometer-type machines, can be used to calc transient processes. Submitted 25 Aug 51.

235T41

MEYEROVICH, E. A.

235T41

APPROVED FOR RELEASE: 07/19/2001 CIA-RDP86-00513R001033720013-1"

"APPROVED FOR RELEASE: 07/19/2001 CIA-RDP86-00513R001033720013-1

MEYEROVICH, E.A., professor.

Remarks on G.I.Atabekov and L.G.Mamikoniants article "Complex substitution schemes for calculating transitional processes by the method of symmetrical components." Elektrichestvo no.2:86-87 F '54. (MLRA 7:2)

(Electric circuits) (Atabekov, G.I.)
(Mamikoniants, L.G.)

APPROVED FOR RELEASE: 07/19/2001 CIA-RDP86-00513R001033720013-1"

"APPROVED FOR RELEASE: 07/19/2001 CIA-RDP86-00513R001033720013-1

KRON, G.; LIBKIND, M.S., kandidat tekhnicheskikh nauk [translator]; TAFT, V.A., kandidat tekhnicheskikh nauk [translator]; ANTIK, I.V., redaktor; MEYEROVICH, E.A., professor, doktor tekhnicheskikh nauk, redaktor; FRIDKIN, L.M., tekhnicheskiy redaktor.

[Application of tensor analysis to electric engineering] Translated from the English. Primenenie tenzornogo analiza v elektrotekhnike. Perevod s angliiskogo M.S.Libkinda, V.A.Tafta. Pod red. i s prilozheniem E.A.Meerovicha.Moskva, Gos.energ.izd-vo, 1955. 274 p.
(Calculus of tensors) (Electric engineering) (MIRA 9:4)

APPROVED FOR RELEASE: 07/19/2001 CIA-RDP86-00513R001033720013-1"

"APPROVED FOR RELEASE: 07/19/2001 CIA-RDP86-00513R001033720013-1

AID P - 3252

Subject : USSR/Electricity

Card 1/2 Pub. 27 - 7/25

Authors : Meyerovich, E. A., Doc. Tech. Sci., Prof., V. I. Gorushkin, Kand. Tech. Sci., and Z. B. Golembo, Kand. Tech. Sci.

Title : Computation of currents and voltages in an electric power system feeding asymmetrical loads

Periodical : Elektrichestvo, 9, 32-39, S 1955

Abstract : The authors present a method of computing currents and voltages in a three-phase system feeding an unsymmetrical load at several points. The method is based on the division of the whole system into two parts: one symmetrical, the other asymmetric. The operating conditions of the symmetrical part are found by the method of symmetrical components. Currents and voltages in connecting points are determined by the method of successive approximations. The conditions of convergence applied for electric power system calculations are analyzed. The same method is applied in an example to calculate asymmetrical currents and

APPROVED FOR RELEASE: 07/19/2001 CIA-RDP86-00513R001033720013-1"

"APPROVED FOR RELEASE: 07/19/2001 CIA-RDP86-00513R001033720013-1

Elektrichestvo, 9, 32-39, S 1955 AID P - 3252

Card 2/2 Pub. 27 - 7/25

voltages in an electric power system feeding from five substations the contact line network of a railroad operating on single-phase a-c current. Three tables, 6 connection diagrams, and 8 Soviet references, 1 - 1936, 7 - 1949-1954.

Institution : Power Engineering Institute of the Academy of Sciences, USSR, and Trust for the Planning and Investigation of Thermal and Electric Power Plants, Networks and Substations.

Submitted : My 31, 1955

APPROVED FOR RELEASE: 07/19/2001 CIA-RDP86-00513R001033720013-1"

"APPROVED FOR RELEASE: 07/19/2001 CIA-RDP86-00513R001033720013-1

KURENEV, S.I., dektor tekhnicheskikh nauk, dotsent; MEYEROVICH, E.A., dektor tekhnicheskikh nauk, professor; VORONOV, R.A., ~~dektor tekhnich~~eskikh nauk, dotsent; POMOMAREVA, G.F., kandidat tekhnicheskikh nauk, dotsent; IONKIN, P.A., kandidat tekhnicheskikh nauk, dotsent.

Methods for calculating nonlinear circuits. Elektrichestvo no.8:91-92 Ag '56. (MLRA 9:10)

1.Kafedra Voyenno-morskoy akademii imeni Krylova (for Kurenev). 2.Energeticheskiy institut imeni Krzhizhanovskogo AN SSSR (for Meyerovich). 3.Moskovskiy energeticheskiy institut imeni Moloteva (for Ionkin).
(Electric circuits)

APPROVED FOR RELEASE: 07/19/2001 CIA-RDP86-00513R001033720013-1"

"APPROVED FOR RELEASE: 07/19/2001 CIA-RDP86-00513R001033720013-1

MEYEROVICH, E.A., doktor tekhnicheskikh nauk, professor.

Research carried out in 1956 in the Academy of Sciences of the U.S.S.R. by the G.M. Krzhizhanovskii Electric Power Institute on the use of electric current for purposes of underground coal gasification and further investigation tasks. Podzem.gaz.ugl. no.2:67-73 '57. (MLRA 10:7)

1. Energeticheskiy institut Akademii nauk SSSR.
(Coal gasification, Underground) (Electricity in mining)

APPROVED FOR RELEASE: 07/19/2001 CIA-RDP86-00513R001033720013-1"