"APPROVED FOR RELEASE: 06/14/2000 CIA-RDP86-00513R001134420008-8

MINIOVICH, I.O. [Miniovych, I.O.]

Work of province cientific pharmaceutical societies in the Ukraine. Farmatsev. zhur. 17 no.5:90-92 '62. (MIRA 17:9)

1. Otvetstvennyy sekretar' upravleniya Nauchnogo farmatsevticheskogo obshchestva UkrSSR.

APPROVED FOR RELEASE: 06/14/2000 CIA-RDP86-00513R001134420008-8"

"APPROVED FOR RELEASE: 06/14/2000 CIA-RDP86-00513R001134420008-8

BUSHKOVA, M.M.; GUBSKIY, I.M. [Hubs'kyi, I.M.]; LITVINENKO, M.M. [Lytvynenko, M.M.]; MINIOVICH, I.O. [Miniovych, I.O.]

Review of the "Manual on the organization of pharmacy" by N.A. Holosova and others. Farmatsev. zhur. 17 no.5:94-95 '62. (MIRA 17:9)

APPROVED FOR RELEASE: 06/14/2000 CIA-RDP86-00513R001134420008-8"

"APPROVED FOR RELEASE: 06/14/2000 CIA-RDP86-00513R001134420008-8

MINIOVICH, I.O. [Miniovych, I.O.]

Hospital pharmacy. Farmatsev. zhur. 18 no.1:78-80 '63. (MIRA 17:10)

1. Kiyevskiy institut usovershenstvovaniya vrachey.

APPROVED FOR RELEASE: 06/14/2000 CIA-RDP86-00513R001134420008-8"

"APPROVED FOR RELEASE: 06/14/2000 CIA-RDP86-00513R001134420008-8

MINIOVICH, I.O.

Drugstore in Fastov. Farmatsev. zhur. 18 no.2:81-82 '63. (MIRA 17:10)

APPROVED FOR RELEASE: 06/14/2000 CIA-RDP86-00513R001134420008-8"

"APPROVED FOR RELEASE: 06/14/2000 CIA-RDP86-00513R001134420008-8

MINIOVICH, I.O., provizor

Some problems of the work organization in drugstores. Farmatsev. zhur. 19 no.6:76-78 '64. (MIRA 18:4)

APPROVED FOR RELEASE: 06/14/2000 CIA-RDP86-00513R001134420008-8"

"APPROVED FOR RELEASE: 06/14/2000 CIA-RDP86-00513R001134420008-8

MINIOVICH, I. YA.,; FIRSOV, G.A.

"The Stabilizing Action of Screw Propellers." Iz. Ak. Nauk SSSR, Otdel. Tekh. Nauk, No. 4-5 - 1944

BR 52059019

APPROVED FOR RELEASE: 06/14/2000 CIA-RDP86-00513R001134420008-8"

"APPROVED FOR RELEASE: 06/14/2000 CIA-RDP86-00513R001134420008-8

31(3) SOV/19-59-6-250/309

AUTHOR: Miniovich, I.Ya.

TITLE: A Screw Propeller

PERIODICAL: Byulleten' izobreteniy, 1959, Nr 6, p 50 (USSR)

ABSTRACT: Class $65f^3$, 9. Nr 118721 (329283 of 9 July 1947). Submitted to the USSR Ministry of Ship Building Industry. 1) To produce tearing flow conditions at the root sections of the blades, and thus increase their resistance to erosion, the propeller blades are made with an abrupt lead increase at the transition into root sections. 2) The root sections are made with a considerable relative thickness, shifted towards the outgoing edge of the blades, and with sharp and slightly lifted incoming edges.

Card 1/1

APPROVED FOR RELEASE: 06/14/2000 CIA-RDP86-00513R001134420008-8"

"APPROVED FOR RELEASE: 06/14/2000 CIA-RDP86-00513R001134420008-8

MINIOVICH, I.Ya. (Leningrad)

Effect of a nonstationary flow around a propeller operating in an irregular field of speed on hydrodynamic characteristics of the propeller. Izv.AN SSSR.Otd.tekh.nauk.Mekh.i mashinostr. no.5: 186-188 S-O '61. (MIRA 14:9)

(Hydrodynamics)

APPROVED FOR RELEASE: 06/14/2000 CIA-RDP86-00513R001134420008-8"

"APPROVED FOR RELEASE: 06/14/2000 CIA-RDP86-00513R001134420008-8

BASIN, Abram Moiseyevich; MINIOVICH, Il'ya Yakovlevich; POLYAKHOV, N.N., doktor tekhn. nauk, retsenzent; RUSETSKIY, A.A., kand. tekhn. nauk, retsenzent; PERNIK, A.D., doktor tekhn. nauk, nauchn. red.; OSVENSKAYA, A.A., red.; KONTOROVICH, A.I., tekhn. red.; KOROVENKO, Yu.N., tekhn. red.

[Theory and design of propellers] Teoriia i raschet grebnykh vintov. Leningrad, Sudpromgiz, 1963. 759 p. (MIRA 16:10)

(Propellers—Design and construction)

APPROVED FOR RELEASE: 06/14/2000 CIA-RDP86-00513R001134420008-8"

"APPROVED FOR RELEASE: 06/14/2000 CIA-RDP86-00513R001134420008-8

MINIOVICH, I.Ya., doktor tekhn.nauk

Out-of-town session of the Section on Seaworthiness in the Central Administration of the Scientific and Technical Society for Shipbuilding. Sudostroenie 29 no.2:83-84 F '63. (MIRA 16:2)

(Naval architecture)

APPROVED FOR RELEASE: 06/14/2000 CIA-RDP86-00513R001134420008-8"

"APPROVED FOR RELEASE: 06/14/2000 CIA-RDP86-00513R001134420008-8

Ca

2

The extraction of hydrogen sulfide from ammoniacal liquor by means of copper sulfate and its subsequent regeneration. M. A. MINIOVICH AND VA. F. DISHEVSKII. *Ukrain. Khem. Zhur.* 5, Tech. Pt., 193 203(1930).—The NH_3 liquor contg. the admixts. of $(NH_4)_2S$, $(NH_4)_2CO_3$, etc., was treated with a soln. of $CuSO_4$. The hydrates of Cu salts and the basic Cu salts first formed gave sol. complex compds., as $Cu(NH_4)_2SO_4$, and insol. CuS. The NH_3, free from H_2S, was driven out of the complex salts and removed by means of air at 10–15 mm. The ppt. contg. CuS, Cu_2S and $Cu_2(OH)_2CO_3$ was filtered, washed, dried at 105°, ignited to form CuO and dissolved in H_2SO_4 to regenerate $CuSO_4$ to use again for the pptn. of H_2S. V. D. KARPENKO

ASM-SLA METALLURGICAL LITERATURE CLASSIFICATION

APPROVED FOR RELEASE: 06/14/2000 CIA-RDP86-00513R001134420008-8"

"APPROVED FOR RELEASE: 06/14/2000 CIA-RDP86-00513R001134420008-8

MINOVICH, M-A.

Ca

16

Reworking of the products of alkaline absorption of nitrogen oxide tailings (inversion). V. F. Cogin and M. A. Minovich. *Khimstroi* 5, 2470-3(1933).—In the conversion of NH_3 to HNO_3, the absorption of the escaping lower oxides of N with alkalies (26-8°Bé. calcined Na_2CO_3) was carried on in Fe scrubbers at 18-20° (gases at 25°). The resulting product, on evapn., gives a mixt. contg. 10% $NaNO_3$ and 77% $NaNO_2$, and as such is not suited for the dye and fertilizer industry, and must be recovered by conversion to $NaNO_3$. In the oxidation the best results were obtained by adding HNO_3 to the liquor at 52-5° for 7-10 hrs., constantly maintained at 3-5% acidity, and stirred with rapid current of air. The app. was lined with granite or with acid-resisting tiles set in asphalt.

Chas. Blanc

ASM-SLA METALLURGICAL LITERATURE CLASSIFICATION

APPROVED FOR RELEASE: 06/14/2000 CIA-RDP86-00513R001134420008-8"

"APPROVED FOR RELEASE: 06/14/2000 CIA-RDP86-00513R001134420008-8

1ST AND 2ND ORDERS

PROCESSES AND PROPERTIES INDEX

3RD AND 4TH ORDERS

CA

18

Production of potassium nitrate from the inverted products of alkaline absorption of nitrogen oxides tailings. V. F. Gogin and M. A. Miniovich. *Khimstroi* 6, 121-5 (1934); cf. *C. A.* 28, 1473[illegible].—The chem. problems of the 1st U. S. S. R. installation for production of com. KNO_3 by double decompn. with KCl are discussed. C. B.

COMMON ELEMENTS

COMMON VARIABLES INDEX

MATERIALS INDEX

OPEN

ASM-SLA METALLURGICAL LITERATURE CLASSIFICATION

APPROVED FOR RELEASE: 06/14/2000 CIA-RDP86-00513R001134420008-8"

"APPROVED FOR RELEASE: 06/14/2000 CIA-RDP86-00513R001134420008-8

1ST AND 2ND ORDERS

PROCESSES AND PROPERTIES INDEX

3RD AND 4TH ORDERS

M

4

"Corrosion of Metals in the Process of Reaction Between Sodium Nitrate and Potassium Chloride. M. A. Misiovich and M. S. Komarovskii (*Khim. Mashinostroenie*, 1935, (3), 11–13; *C. Abs.*, 1936, 30, 7594).—[In Russian.] A study was made of the causes of corrosion of iron, copper, aluminium, and chromium-nickel-steels in contact with a solution containing components of the reaction: $NaNO_3 + KCl = KNO_3 + NaCl$, at 90°–120° C. Air blown through the solution for the purpose of mixing promotes corrosion, and it is recommended to use live steam instead. The presence of a large amount of chlorides in solution, high temperature of operation and violent splashing of the liquid against the metal are the other causes of corrosion. Iron was the most resistant, the loss being 0·0784 mm. in depth, or 0·167 grm./m.²/hr. Contrary to data given in the literature, it was found that red copper is less resistant than iron. Aluminium can be used only when the amount of sodium chloride in solution is less than 3%. Yellow copper is entirely unsuitable. No conclusive data were obtained regarding nickel-chromium steels.—S. G.

ASM-SLA METALLURGICAL LITERATURE CLASSIFICATION

APPROVED FOR RELEASE: 06/14/2000 CIA-RDP86-00513R001134420008-8"

"APPROVED FOR RELEASE: 06/14/2000 CIA-RDP86-00513R001134420008-8

CA

18

PROCESSES AND PROPERTIES INDEX

Obtaining [illegible] from soda and dilute and concentrated [illegible] gases. M. A. Mikulich. J. Chem. Ind. (U. S. S. R.) 14, 108-12(1937).—Waste gases containg. small amts. of NO and NO_2 are scrubbed with soda soln., and these solns. are then used for scrubbing gases rich in NO. H. M. Leicester

ASM-SLA METALLURGICAL LITERATURE CLASSIFICATION

APPROVED FOR RELEASE: 06/14/2000 CIA-RDP86-00513R001134420008-8"

"APPROVED FOR RELEASE: 06/14/2000 CIA-RDP86-00513R001134420008-8

PROCESSES AND PROPERTIES INDEX

26

The manufacture of house paints from waste sludge. M. A. Minkovich. *J. Chem. Ind.* (U. S. S. R.) 18, No. 6, 28-30(1941); *Chem. Zentr.* 1943, I, 215. A sludge contg. 43.6% $CaSO_4$ + CaO, 4% $Na_4Fe(CN)_6$ + $Ca_2Fe(CN)_6$, 1% $Fe_4Fe(CN)_3$, 1% Al_2O_3 + Fe_2O_3, 0.5% SiO_2, 2.5% C and 45% H_2O is stirred with a 1-2% excess of 10% $FeSO_4$ soln., neutralized and decanted after standing. The resulting pigment is essentially Berlin blue contg. C and $CaSO_4$ as fillers. When the above sludge and another contg. 30% $CaCO_3$, 2% $Ca(OH)_2$, 4% CaS, 9% $CaSO_4$, 3.5% SiO_2 and 51% H_2O are mixed and treated with 5% $FeSO_4$ and 1% $Pb(NO_3)_2$ solns., they give a gray pigment contg. FeS_2, PbS, Perlin blue and C and $CaSO_4$ fillers.

H. M. Leicester

ASM-SLA METALLURGICAL LITERATURE CLASSIFICATION

APPROVED FOR RELEASE: 06/14/2000 CIA-RDP86-00513R001134420008-8"

"APPROVED FOR RELEASE: 06/14/2000 CIA-RDP86-00513R001134420008-8

MINIOVICH, M.A.

27

Manufacture of weak nitric acid. M. A. Miniovich and N. I. Belyaev. *Khim. Nauka i Prom.* 1, 661-8(1956).—Review. I. Bencowitz

3

4E4j -1

MT

APPROVED FOR RELEASE: 06/14/2000 CIA-RDP86-00513R001134420008-8"

"APPROVED FOR RELEASE: 06/14/2000 CIA-RDP86-00513R001134420008-8

Caking characteristics of ammonium nitrate. A. L. Shneerson, V. A. Klevke, and M. A. Minlovich. Zhur. Prikkl. Khim. 29, 682-8(1956). The effect of cooling, moisture content, KNO_3, and compression (up to 0.2 kg./sq. cm.) on the caking characteristics of NH_4NO_3 was detd. Samples (12 g.) were heated up to 75°, compressed in a thermostat, and transferred (sample and press) into a [illegible] where it was allowed to cool. The

APPROVED FOR RELEASE: 06/14/2000 CIA-RDP86-00513R001134420008-8"

"APPROVED FOR RELEASE: 06/14/2000 CIA-RDP86-00513R001134420008-8

APPROVED FOR RELEASE: 06/14/2000 CIA-RDP86-00513R001134420008-8"

"APPROVED FOR RELEASE: 06/14/2000 CIA-RDP86-00513R001134420008-8

MINIOVICH, M.A.

Caking characteristics of ammonium nitrate. A. I. Shneerson, V. A. Klevke, and M. A. Miniovich. [illegible] Chem. [illegible] 20 [illegible] English translation [illegible] 30, [illegible]

APPROVED FOR RELEASE: 06/14/2000 CIA-RDP86-00513R001134420008-8"

"APPROVED FOR RELEASE: 06/14/2000 CIA-RDP86-00513R001134420008-8

APPROVED FOR RELEASE: 06/14/2000 CIA-RDP86-00513R001134420008-8"

"APPROVED FOR RELEASE: 06/14/2000 CIA-RDP86-00513R001134420008-8

MINIOVICH, M.A., kand. tekhn. nauk

Production of granulated calcium ammonium nitrate on an experimental-industrial scale. Trudy GIAP no.8:178-193 '57. (MIRA 12:9)

(Calcium ammonium nitrate)

APPROVED FOR RELEASE: 06/14/2000 CIA-RDP86-00513R001134420008-8"

"APPROVED FOR RELEASE: 06/14/2000 CIA-RDP86-00513R001134420008-8

MINIOVICH, M.A.

Present state and future prospects of the development of the dilutenitric acid industry. Zhur. prikl. khim. 31 no.8:1129-1138 Ag '58. (MIRA 11:10)

(Nitric acid)

APPROVED FOR RELEASE: 06/14/2000 CIA-RDP86-00513R001134420008-8"

"APPROVED FOR RELEASE: 06/14/2000 CIA-RDP86-00513R001134420008-8

MINIOVICH, M.A.; SHNEYERSON, A.L.; KLEVKE, V.A.

New refrigerant for the condensation of nitrogen oxides from nitrosyl gases. Zhur.prikl.khim. 31 no.11:1739-1741 N '58.

(MIRA 12:2)

(Nitrogen oxides) (Refrigerants)

APPROVED FOR RELEASE: 06/14/2000 CIA-RDP86-00513R001134420008-8"

"APPROVED FOR RELEASE: 06/14/2000 CIA-RDP86-00513R001134420008-8

5(1)

AUTHORS: Epshteyn, D. A., Tkachenko, N. M., Miniovich, M. A., Dobrovol'skaya, N. V. SOV/20-122-5-35/56

TITLE: A Two-Stage Catalyst for Oxidation of Ammonia (Dvukhstupenchatyy katalizator okisleniya ammiaka)

PERIODICAL: Doklady Akademii nauk SSSR, 1958, Vol 122, Nr 5, pp 874-877 (USSR)

ABSTRACT: Catalysts for the oxidation of ammonia to nitric oxide can be divided according to their chemical composition into platiniferous and non-platiniferous catalysts. The latter include iron, cobalt, chromium oxides and oxides of other metals. In industry platiniferous catalysts are used almost exclusively, although they are less accessible and more expensive than non-platiniferous ones and involve large irrecoverable losses. But they are stable and guarantee a high degree of transformation of ammonia to nitric oxide (97-98% yield of N_2O). Both groups of catalysts have a great power of selectivity. The question arises as to the conditions under which non-platiniferous catalysts retain their high selectivity without change for a period of time that would meet industrial requirements. The first and second author studied the oxidation

Card 1/3

APPROVED FOR RELEASE: 06/14/2000 CIA-RDP86-00513R001134420008-8"

"APPROVED FOR RELEASE: 06/14/2000 CIA-RDP86-00513R001134420008-8

of ammonia with several non-platiniferous catalysts (Ref 1). Because of various difficulties it was decided to place a standard platinum grid in front of the non-platiniferous catalyst so that the latter contacts a partly reacted mixture. By means of a sight glass it was discovered that the non-platiniferous catalyst, which formerly would hardly glow, soon started to operate again under these conditions. The yield of nitric oxide rose to its original level (98%) and remained there for a long time without dropping: under all other optimum conditions the non-platiniferous catalyst reached stability. It was obvious that the drop of activity and selectivity of the non-platiniferous catalyst was due to a change in its frontal layer, that comes into contact with the new air-ammonia mixture. The great amount of heat created and the ever present poisonous components inactivate the frontal layer. If a platinum grid is used, comparatively little heat is created because of the reduced ammonia concentration and a part of the poison is neutralized by the platinum. The authors have conducted experiments under different conditions and with grids of different densities . The results are given in table 1. From this study the conclusion may be drawn that some non-platiniferous catalysts equal platiniferous catalysts with

APPROVED FOR RELEASE: 06/14/2000 CIA-RDP86-00513R001134420008-8"

"APPROVED FOR RELEASE: 06/14/2000 CIA-RDP86-00513R001134420008-8

respect to their selectivity. They possess a higher stability when part of the ammonia was previously oxidized at a platiniferous catalyst. A possible mechanism of reaction had been discussed before (Ref 3). There are 1 table and 3 Soviet references.

ASSOCIATION: Gosudarstvennyy nauchno-issledovatel'skiy i proyektnyy institut azotnoy promyshlennosti (State Scientific and Planning Research Institute of Nitrogen Industry)

PRESENTED: June 9, 1958, by S. I. Vol'fkovich, Academician

SUBMITTED: June 6, 1958

APPROVED FOR RELEASE: 06/14/2000 CIA-RDP86-00513R001134420008-8"

"APPROVED FOR RELEASE: 06/14/2000 CIA-RDP86-00513R001134420008-8

80100
S/080/60/033/04/10/045

5.2400

AUTHORS: Dmitriyev, M.T., Saradzhev, L.V., Miniovich, M.A.

TITLE: The Energy Yield of Decomposition of Nitrogen Oxides Under the Action of Ionizing Radiation

PERIODICAL: Zhurnal prikladnoy khimii, 1960, Vol 33, Nr 4, pp 808 - 814

TEXT: Nitrogen oxides can be used as gas dosimeters for ionizing radiation. The radiation oxidation of nitrogen is important for the manufacture of nitric acid by means of atomic energy. Data on the energy yields of the decomposition reaction of nitrogen oxides under the action of electrons and γ-radiation depending on the pressure, the temperature and the irradiation dose are given in the article. As sources of ionizing radiation an electronic beam with an energy of up to 1 kev and radioactive cobalt-60 with an acitvity of 20,000 Curie were used. A pressure increase from 10 mm Hg to 1.5 atm increases the decomposition yield of NO by 4%, of N_2O by 9%, but decreases the yield of NO_2 by 38%. A temperature increase from 0 to 400°C increases the decomposition yield of N_2O 1.9 times and of NO_2 7 times, but decreases the yield of NO by 10%. An increase in the irradiation dose decreases the decomposition yields of all oxides. The degree of the resistance against ionizing radiation of the various nitrogen oxides is the opposite of

Card 1/2

APPROVED FOR RELEASE: 06/14/2000 CIA-RDP86-00513R001134420008-8"

"APPROVED FOR RELEASE: 06/14/2000 CIA-RDP86-00513R001134420008-8

80100
S/080/60/033/04/10/045

The Energy Yield of Decomposition of Nitrogen Oxides Under the Action of Ionizing Radiation

the degree of their resistance against high temperature. The stationary concentration of the product of radio-chemical reaction corresponds to the equilibrium between the rates of direct and reverse reactions. In the case of small irradiation doses the stationary concentration of NO_2 was 6%, at intense irradiation it reached 10% and the irradiation with fission particles produced 5 - 15%. The best dosimeter of nitrogen oxides at a constant temperature proved to be N_2O, because its energy yield almost does not depend on the irradiation dose , the ionization density and the type of irradiation. If the temperature of the irradiated system is not constant the best results are obtained with NO.

There are: 6 graphs, 2 tables and 13 references, 9 of which are Soviet and 4 English.

SUBMITTED: July 3, 1959

Card 2/2

APPROVED FOR RELEASE: 06/14/2000 CIA-RDP86-00513R001134420008-8"

"APPROVED FOR RELEASE: 06/14/2000 CIA-RDP86-00513R001134420008-8

ITKINA, D.Ya.; MINIVOVICH, M.A.; NAZAROVA, T.I.

Reaction rate of decomposition of ammonium nitrite solutions. Zhur. prikl.khim. 35 no.1:43-47 Ja '62. (MIRA 15:1)
(Ammonium nitrite) (Chemical reaction, Rate of)

APPROVED FOR RELEASE: 06/14/2000 CIA-RDP86-00513R001134420008-8"

"APPROVED FOR RELEASE: 06/14/2000 CIA-RDP86-00513R001134420008-8

L 10197-66 EWT(m)/EWP(t)/EWP(b) IJP(c) JD

ACC NR: AP5028456 SOURCE CODE: UR/0286/65/000/020/0019/0019

AUTHORS: Miriovich, M. A.; Shneyerson, A. L.; Filippova, Zh. M.; Atroshchenko, V. I.; Zasorin, A. P.; Ivanovskiy, F. P.

ORG: none

TITLE: Method for obtaining nitric acid. Class 12, No. 175492 [announced by State Scientific Research and Design Institute for the Nitrogen Industry and Products of Organic Synthesis (Gosudarstvennyy nauchno-issledovatel'skiy i proyektnyy institut azotnoy promyshlennosti i produktov organicheskogo sinteza)]

SOURCE: Byulleten' izobreteniy i tovarnykh znakov, no. 20, 1965, 19

TOPIC TAGS: nitric acid, nitrogen oxide, nitrogen compound

ABSTRACT: This Author Certificate presents a method for obtaining nitric acid at a pressure of 4—9 atm by absorbing gaseous nitrogen oxides in water in an absorption tray-type column. To obtain 68—80% nitric acid, liquid oxides of nitrogen are introduced into the column at a point below the formation of 50—63% nitric acid. The reaction may also be carried out by introducing air into the column at a point below which the liquid oxides of nitrogen are introduced.

SUB CODE: 11/ SUBM DATE: 18Oct63/

Card 1/1 UDC: 661.56

APPROVED FOR RELEASE: 06/14/2000 CIA-RDP86-00513R001134420008-8"

"APPROVED FOR RELEASE: 06/14/2000 CIA-RDP86-00513R001134420008-8

[illegible]ERSON, A.L.; FILIPPOVA, Zh.M.; MINIOVICH, M.A.

Density and viscosity of concentrated solutions of magnesium nitrate within 100°-150° temperature range. Zhur.prikl.khim. 38 no.9:2110-2112 S '65.

(MIRA 18:11)

APPROVED FOR RELEASE: 06/14/2000 CIA-RDP86-00513R001134420008-8"

"APPROVED FOR RELEASE: 06/14/2000 CIA-RDP86-00513R001134420008-8

L 58810-65 EWT(m)/EPF(c)/EPR/EWP(t)/EWP(b) Pr-4/Ps-4 IJP(c) JD

ACCESSION NR: AP5015691 UR/0076/65/039/006/1403/1407
542.48 + 541.123.3

29
26
B

AUTHOR: Shneyerson, A.L.; Miniovich, M.A.; Filippova, Zh. M.; Soroko, S.N.; Platonov, P.A.

TITLE: Liquid-vapor equilibrium in the systems nitric acid-water-magnesium nitrate, nitric acid-water-calcium nitrate, and nitric acid-water-magnesium nitrate-calcium nitrate

27

SOURCE: Zhurnal fizicheskoy khimii, v. 39, no. 6, 1965, 1403-1407

TOPIC TAGS: magnesium nitrate, calcium nitrate, nitric acid, phase equilibrium, azeotropic mixture

ABSTRACT: The presence of magnesium nitrate, calcium nitrate or their mixtures in the HNO_3-H_2O system sharply increases the HNO_3 content in the vapor phase and displaces its azeotropic point, the effect of magnesium nitrate being more pronounced.

APPROVED FOR RELEASE: 06/14/2000 CIA-RDP86-00513R001134420008-8"

"APPROVED FOR RELEASE: 06/14/2000 CIA-RDP86-00513R001134420008-8

concentration in the vapor phase increases to 53.5 and 52.3%, respectively. The

Card 1/4

L 58810-65

ACCESSION NR: AP5015691

3

effect of the nitrates on the azeotropic point of nitric acid is approximately additive. Hence, in order to obtain the equilibrium vapor compositions for the system HNO_3-H_2O-$Ca(NO_3)_2$-$Mg(NO_3)_2$, it is sufficient to have data for the ternary systems

APPROVED FOR RELEASE: 06/14/2000 CIA-RDP86-00513R001134420008-8"

"APPROVED FOR RELEASE: 06/14/2000 CIA-RDP86-00513R001134420008-8

art. has: 4 figures and 2 tables.

ASSOCIATION: Gosudarstvennyy institut azotnoy promyshlennosti (State Institute of the Nitrogen Industry)

SUBMITTED: 13Feb64 ENCL: 02 SUB CODE: IC

NO REF SOV: 003 OTHER: 004

Card 2/4

APPROVED FOR RELEASE: 06/14/2000 CIA-RDP86-00513R001134420008-8"

"APPROVED FOR RELEASE: 06/14/2000 CIA-RDP86-00513R001134420008-8

L 29895-66 EWT(m)/EWP(t)/ETI IJP(c) WW/JW/JD

ACC NR: AP6006464 SOURCE CODE: UR/0064/65/000/010/0743/0745

AUTHOR: Atroshchenko, V. I.; Zasorin, A. P.; Miniovich, M. A.

ORG: none

TITLE: Prospects for using oxygen in the production of nitric acid

SOURCE: Khimicheskaya promyshlennost', no. 10, 1965, 743-745

TOPIC TAGS: nitric acid, nitric oxide, nitrogen compound, oxygen, air

ABSTRACT: The article discusses the advantages of using oxygen in the production of nitric acid and discusses several flow schemes using pure oxygen instead of air. It is the expressed opinion of the authors that completely replacing air with oxygen in the production of nitric acid is full of promise. They point out that as a consequence of the fact that the cost of electrical energy is continually dropping and that the technology of separating air into its components is continually improving ensures the continued drop in the cost of oxygen. It is noted that the cost of stainless steel materials used in nitric acid production and the extent of capital investments required for

APPROVED FOR RELEASE: 06/14/2000 CIA-RDP86-00513R001134420008-8"

"APPROVED FOR RELEASE: 06/14/2000 CIA-RDP86-00513R001134420008-8

L 29895-66

ACC NR: AP6006464

producing nitric acid by conventional methods are decreasing to a considerably lesser extent. By using oxygen the rate of oxidation of nitric oxide can be increased 200 times. The authors have made a detailed study of the oxidation process of ammonia by oxygen in which the temperature of the original reaction mixture is reduced from 2,300-2,400°C to the optimum temperature of 850 - 900°C by mixing it with water vapor which they consider the most advantageous of the two methods discussed. It is concluded that the investigation, design and construction of experimental plants for the contact oxidation of ammonia with oxygen deserve serious consideration. Orig. art. has 1 figure and 2 tables.

SUB CODE: 07/ SUBM DATE: none/ ORIG REF: 007/

CARD 2/2

APPROVED FOR RELEASE: 06/14/2000 CIA-RDP86-00513R001134420008-8"

"APPROVED FOR RELEASE: 06/14/2000 CIA-RDP86-00513R001134420008-8

30975. MINIOVICH, M. M.

Ostryy mieloblastoz s nekrozom predstatel'noy zhelezy. v sb: Voprosy ostroy vnutrenney kliniki. M., 1949 s. 292-93

APPROVED FOR RELEASE: 06/14/2000 CIA-RDP86-00513R001134420008-8"

"APPROVED FOR RELEASE: 06/14/2000 CIA-RDP86-00513R001134420008-8

30985. MINIOVICH, M. M.

Sluchay opistorkhoza. V cb: Voprosy ostroy vnutrenney kliniki. M., 1949, s. 329-32

APPROVED FOR RELEASE: 06/14/2000 CIA-RDP86-00513R001134420008-8"

"APPROVED FOR RELEASE: 06/14/2000 CIA-RDP86-00513R001134420008-8

PA 65/49T82

USSR/Medicine - Campolone Apr 49
Coma Hepaticum

"USSR Campolone for Treating Coma Hepaticum," M. M. Minovich, Therapeutic Clinic, Inst imeni Sklifosovskiy, ½ p

"Sov Med" No 4

Campolone is prepared from liver extract, vitamin B complex, choline, inosite and folic acid. Large doses are recommended in acute coma hepaticum. In view of the prophylactic action of liver preparations and the consequent increased detoxicating action of the liver,

65/49T82

USSR/Medicine - Campolone (Contd) Apr 49

campolone is suggested as a preventive prophylaxis against salvarsan reaction on the liver in venereological practice. Dir, Inst imeni Sklifosovskiy: Prof A. N. Kryukov.

65/49T82

MINOVICH, M. M.

APPROVED FOR RELEASE: 06/14/2000 CIA-RDP86-00513R001134420008-8"

"APPROVED FOR RELEASE: 06/14/2000 CIA-RDP86-00513R001134420008-8

KUSHKIY, R.O., kand. med. nauk; MINIOVICH, M.M.; MAKAROVA, A.A. (Moskva)

Changes in the ocular fundus in rheumatism. Klin. med. 37 no.5: 38-41 My '59. (MIRA 12:8)

1. Iz terapevticheskoy kliniki (rukovoditel' - prof. P.L. Sukhinin) Moskovskogo gorodskogo nauchno-issledovatel'skogo instituta skoroy pomoshchi imeni Sklifosovskogo (dir. - zasluzhennyy vrach USSR M.M. Tarasov).

(RHEUMATISM, pathol.
ocular fundus (Rus))
(EYE, pathol.
fundus in rheum. (Rus))

APPROVED FOR RELEASE: 06/14/2000 CIA-RDP86-00513R001134420008-8"

"APPROVED FOR RELEASE: 06/14/2000 CIA-RDP86-00513R001134420008-8

KUSHKIY, R.O.; MINIOVICH, M.M.

Neuropsychic disorders in cardiovascular diseases. Trudy Inst. im. N.V. Sklif. 5 no.2:78-84 '62. (MIRA 18:6)

APPROVED FOR RELEASE: 06/14/2000 CIA-RDP86-00513R001134420008-8"

"APPROVED FOR RELEASE: 06/14/2000 CIA-RDP86-00513R001134420008-8

MINKOVICH, M.M.

Transfusions of concentrated blood protein products in nephrosis and nephritis with a nephrotic component. Trudy Inst. im. N.V. Sklif. 5 no.2:148-160 '62.

Case of intravital diagnosis of cystic degeneration of the lungs. Ibid.:228-231 (MIRA 18:6)

APPROVED FOR RELEASE: 06/14/2000 CIA-RDP86-00513R001134420008-8"

"APPROVED FOR RELEASE: 06/14/2000 CIA-RDP86-00513R001134420008-8

31084. MINIOVICH, P. A.

Lechenie neyrosifilisa penitsillinom. Vestnik venerologii i dermatologii, 1949, No. 5, s. 29-36--Bibliogr:s. 36

APPROVED FOR RELEASE: 06/14/2000 CIA-RDP86-00513R001134420008-8"

"APPROVED FOR RELEASE: 06/14/2000 CIA-RDP86-00513R001134420008-8

MINIOVICH, P.A.; OSTROVSKAYA, K.A.

Proserine therapy of organic diseases of the nervous system. Klin. med.,Moskva 29 no.4:65-69 Apr 1951. (CLML 20:9)

1. Of the Clinic for Nervous Diseases, Stalino Medical Institute, Stalino.

APPROVED FOR RELEASE: 06/14/2000 CIA-RDP86-00513R001134420008-8"

"APPROVED FOR RELEASE: 06/14/2000 CIA-RDP86-00513R001134420008-8

MINIOVICH, P. A. - BATUNSKAYA, R. I.

Penicillin - Therapeutic Use

Penicillin therapy of acute neural virus infectiojs. Zhur. nevr. i psikh. 53 no.2,1953

9. Monthly List of Russian Accessions, Library of Congress, May 1953. Unclassified

APPROVED FOR RELEASE: 06/14/2000 CIA-RDP86-00513R001134420008-8"

"APPROVED FOR RELEASE: 06/14/2000 CIA-RDP86-00513R001134420008-8

MINIOVICH, P.A., prof.

Treatment of cerebral form of hypertension. Klin.med. 32 no.9:57-62 S '54. (MLRA 7:12)

1. Iz kliniki nervnykh bolezney Stalinskogo meditsinskogo instituta.
(HYPERTENSION, therapy)

APPROVED FOR RELEASE: 06/14/2000 CIA-RDP86-00513R001134420008-8"

"APPROVED FOR RELEASE: 06/14/2000 CIA-RDP86-00513R001134420008-8

MINIOVICH, P.A.

Results of treating epilepsy. Zhur.nevr.i psikh. 55 no.5:346-348 '55. (MLRA :7)

1. Klinika nervnykh bolezney Stalinskogo meditsinskogo instituta.
(EPILEPSY, therapy)

APPROVED FOR RELEASE: 06/14/2000 CIA-RDP86-00513R001134420008-8"

"APPROVED FOR RELEASE: 06/14/2000 CIA-RDP86-00513R001134420008-8

Minjovich, P.A.

2

Penicillin therapy in acute neuro-infections. P. A. Minjovich and R. I. Batunskaya (Med. Inst., Stalino). *Zhur. Nevropatol. i Psikhiatrii im. Korsakova* 53, 123-4(1956).—Seventy patients with acute neuroinfections were given each intramuscular injections of 30,000-40,000 units of penicillin every 3 hrs. until a total of 1-6 million units were given. Some of the patients were given in addition endolumbarly 20,000 units of penicillin once or twice. Therapy with glucose, vitamin B_1, sulfidine, and in some cases with proserine was resorted to simultaneously. M. and B. conclude that modern therapy of acute virus neuro-infection should in-

APPROVED FOR RELEASE: 06/14/2000 CIA-RDP86-00513R001134420008-8"

"APPROVED FOR RELEASE: 06/14/2000 CIA-RDP86-00513R001134420008-8

cillin to patients with acute ... and increases the
lomyeloradiculoneuritis hastens the cure and increases the

number of cases benefiting from such treatment as compared with the results of other usually employed treatments.

B. S. Levine

APPROVED FOR RELEASE: 06/14/2000 CIA-RDP86-00513R001134420008-8"

"APPROVED FOR RELEASE: 06/14/2000 CIA-RDP86-00513R001134420008-8

NIKOLAYEV, L., inzh.; OLEYNIK, G.; DRUST, V.; MINISHEV, P., inzh.; LUKASHEVSKIY, L., inzh.

Adopted at the Exhibition of the Achievements of the National Economy and introduced into industrial production. Inform.biul. VDNKH no.11:11-12 N '64. (MIRA 18:2)

1. TSentral'noye byuro tekhnicheskoy informatsii Privolzhskogo soveta narodnogo khozyaystva (for Oleynik). 2. Latviyskiy institut nauchno-tekhnicheskoy informatsii (for Drust).

APPROVED FOR RELEASE: 06/14/2000 CIA-RDP86-00513R001134420008-8"

"APPROVED FOR RELEASE: 06/14/2000 CIA-RDP86-00513R001134420008-8

Minshin, M. Y.

SOV/89-5-3-2/19

AUTHORS: Dollezhal', N. A., Krasin, A. K., Aleshchenkov, P. I., Grigor'yants, A. N., Florinskiy, B. V., Minashin, M. Ye., Semel'yanov, I. Ya., Kugushev, N. N., Sharapov, V. N., Mityayev, Yu. I., Galanin, A. N.

TITLE: A Uranium-Graphite Reactor With Superheating of Steam of High Pressure. I (Uran-grafitovyy reaktor s peregrevom para vysokogo davleniya)

PERIODICAL: Atomnaya energiya, 1958, Vol. 5, Nr 3, pp. 223-233 (USSR)

ABSTRACT: The 400 MW plant is equipped with 4 uranium-graphite reactors. A reactor and a steam turbine of 100 MW together form a closed block. A number of investigations was carried out for the purpose of checking the individual parts of this block. The following results were obtained:
1) With a thermal flux of $\sim 1.10^6$ kcal/m^{2}h the steam content by weight at the outlet attains a value of up to 20%.

2) Several hundred hours' uninterrupted operation of a thermal the boiling stage did not disrupt the channel.
3) The activity of the steam condenser was found to be 10 times

Card 1/3

lower than that of the water in the separator.
4) If the content of steam in the steam-water mixture attains 15 - 20%, a pulsation of the consumption of the mixture occurs. From the moment at which the steam mixture passes from the separator into the turbine, pulsation stops and does not occur again in the course of a further increase of the steam phase.
5) During the initial development of the waterlevel in the separator the temperature in the fuel channels fluctuates considerably. As soon as stable conditions are established, these fluctuations cease.
6) The steam-water mixture was not found to be delayed in any of the channels.
From a plurality of varieties the best scheme for the production of superheated steam was selected (see figures). The turbogenerator MK-100 operates with a steam of 90 atm and a temperature of 480 - 535° C.
The following are the physical characteristics of the reactor:

Thermal output	285 MW
Electrical output	100 MW
Average cycle	730 days
Uranium charge	90 tons

Card 2/3

Uranium enrichment at the beginning of a cycle	1,3 %
Uranium enrichment at the end of a cycle	1,03 %
Breeding ratio at the beginning of a cycle	65 %
Breeding ratio at the end of a cycle	55 %
Amount of U-235 burned-up during a cycle	243 kg
Amount of Pu-239 burned-up during a cycle	55 kg
Amount of Pu-239 and Pu-241 at the end of a cycle	132 kg
Excess reactivity for temperature effect	0,040
Excess reactivity for poisoning	0,015
Excess reactivity for the fuel burn-up and long-lived fission fragments	0,025
Total excess reactivity	0,080

There are 8 figures.

Card 3/3

APPROVED FOR RELEASE: 06/14/2000 CIA-RDP86-00513R001134420008-8"

"APPROVED FOR RELEASE: 06/14/2000 CIA-RDP86-00513R001134420008-8

MINISTR, A.

TECHNOLOGY

periodicals: HUTNICKE LISTY Vol. 13, no. 12, Dec. 1958

MINISTR, A. Lead-bronze gearings manufactured by the methods of powder metallurgy. p. 1132

Monthly List of East European Accessions (EEAI) LC Vol. 8, no. 5
May 1959, Unclass.

APPROVED FOR RELEASE: 06/14/2000 CIA-RDP86-00513R001134420008-8"

"APPROVED FOR RELEASE: 06/14/2000 CIA-RDP86-00513R001134420008-8

MINISTR, J.

"Technology of centering and mounting of lenses."

JEMNA MECHANIKA A OPTIKA, Praha, Czechoslovakia, Vol. 4, No. 4, April 1959.

Monthly List of East European Accessions (EEAI), LC, Vol. 8, no. 9, September 1959.

Unclassified.

APPROVED FOR RELEASE: 06/14/2000 CIA-RDP86-00513R001134420008-8"

"APPROVED FOR RELEASE: 06/14/2000 CIA-RDP86-00513R001134420008-8

14159* Properties and Use of Sintered Permanent Magnets. **Vlastnosti a použití slinutých trvalých magnetů.** (Czech.) Zdeněk Minister. *Hutnické listy*, 10, no. 7, July 1955, p. [redacted]

MG

Properties of sintered and cast permanent magnets. Alni and advantages and disadvantages of both production methods are compared. Diagrams, graphs, [illegible] micrograph. 8 ref.

APPROVED FOR RELEASE: 06/14/2000 CIA-RDP86-00513R001134420008-8"

"APPROVED FOR RELEASE: 06/14/2000 CIA-RDP86-00513R001134420008-8

Ministr, Z

18 18 3

New Viewpoints on Grinding and Polishing, Particularly of Metallographic Specimens. Z. Ministr. (*Hutnik*, 1956, 6, (9), 257–262). [In Czech]. Recent developments in polishing and grinding techniques are surveyed, and the suitability of diamond abrasives for rapid and efficient grinding of samples is discussed.—P. P.

APPROVED FOR RELEASE: 06/14/2000 CIA-RDP86-00513R001134420008-8"

"APPROVED FOR RELEASE: 06/14/2000 CIA-RDP86-00513R001134420008-8

Zdenek, Ministr, Z.

8247* Semi-Automatic Polishing of Metallographic Specimens From Very Hard Materials. Poloautomatické broušení metalografických vzorků velmi tvrdých materiálů. (Czech.) Zdeněk Ministr, *Hutnické Listy*, v 11, no. 3, Mar. 1956, p. 154-160. MG

Boron carbide and diamond dust are used. In a special holder, 48 specimens were polished in 50 min. Tables, graph, diagrams, photographs, micrographs. 16 ref

APPROVED FOR RELEASE: 06/14/2000 CIA-RDP86-00513R001134420008-8"

"APPROVED FOR RELEASE: 06/14/2000 CIA-RDP86-00513R001134420008-8

MINISTR, Z.

MINISTR, Z. Preparing sintered materials for the manufacture of contacts. p.453

Vol. 45, no. 9, Sept. 1956
ELEKTROTECHNICKY OBZOR
TECHNOLOGY
Praha, Czechoslovak

So: East European Accession, Vol. 6, No. 2, 1957

APPROVED FOR RELEASE: 06/14/2000 CIA-RDP86-00513R001134420008-8"

"APPROVED FOR RELEASE: 06/14/2000 CIA-RDP86-00513R001134420008-8

Ministr, Z.

Ministr, Z. New developments in powder metallurgy. p. 48.

Vol. 7, no. 1, Jan. 1957
STROJIRENSTVI
TECHNOLOGY
Czechoslovakia

So: East European Accessions, Vol. 6, May 1957
No. 5

APPROVED FOR RELEASE: 06/14/2000 CIA-RDP86-00513R001134420008-8"

"APPROVED FOR RELEASE: 06/14/2000 CIA-RDP86-00513R001134420008-8

SOV/122-58-5-22/26

AUTHOR: Ministr, Engineer (Czechoslovakia)

TITLE: New Achievements in Powder Metallurgy (Novoye v poroshkovoy metallurgii)

PERIODICAL: Vestnik Mashinostroyeniya, 1958, Nr 5, pp 79 - 80 (USSR)

ABSTRACT: Abbreviated translation from the Czech periodical Strojirenstvi, 1957, Nr 1.
There are 1 English, 1 Czech and 1 German reference.

Card 1/1 1. Metallurgy--USSR 2. Powders--Applications

APPROVED FOR RELEASE: 06/14/2000 CIA-RDP86-00513R001134420008-8"

"APPROVED FOR RELEASE: 06/14/2000 CIA-RDP86-00513R001134420008-8

CZECHOSLOVAKIA/Laboratory Equipment. Instrumentation. F

Abs Jour : Ref Zhur - Khim., No 11, 1959, No 38409

Author : Ministr, Z.
Inst : -
Title : Practical Applications for the Quantitative Grating in Metallographic Analysis

Orig Pub : Hutnicke Listy, 13, No 7, 598-603 (1958) (in Czech with German, English, French, and Russian Summaries)

Abstract : The author discusses possible errors in the quantitative metallographic analysis in which use is made of calibrated gratings; the errors discussed are related to the relative error in the computational procedure used, to the insufficient resolving power and lack of sharpness in focusing the image, and to the porosity of the material. Formulas are given for the conversion of results obtained from the analysis of two-component

Card : 1/2

F-2

APPROVED FOR RELEASE: 06/14/2000 CIA-RDP86-00513R001134420008-8"

"APPROVED FOR RELEASE: 06/14/2000 CIA-RDP86-00513R001134420008-8

MINISTR, Z., inzh. (Chekhoslovakiya).

Developments in powder metallurgy. Vest. mash. 38 no.5:79-80 My '58. (MIRA 11:5)
(Powder metallurgy)

APPROVED FOR RELEASE: 06/14/2000 CIA-RDP86-00513R001134420008-8"

"APPROVED FOR RELEASE: 06/14/2000 CIA-RDP86-00513R001134420008-8

MINISTR, Z.

New achievements in powder metallurgy. P 525

STROJIRENSTVI (Ministerstvo tezkeho strojirenstvi, Ministerstvo vscobecnebo strojirenstvi) Praha, Czechoslovakia Vol. 9, no. 7 July 1959

Monthly List of East European Accessions (EEAI), LC. Vol. 9, no. 2, Feb. 1960

Uncl.

APPROVED FOR RELEASE: 06/14/2000 CIA-RDP86-00513R001134420008-8"

"APPROVED FOR RELEASE: 06/14/2000 CIA-RDP86-00513R001134420008-8

MINISTR, Z.

"Survey of new grinding materials used in metallography."

HUTNICKE LISTY. Brno, Czechoslovakia, Vol. 14, March 1959.

Monthly List of East European Accessions (EEAI), LC, Vol. 8, No. 8, September 1959.
Unclas.

APPROVED FOR RELEASE: 06/14/2000 CIA-RDP86-00513R001134420008-8"

"APPROVED FOR RELEASE: 06/14/2000 CIA-RDP86-00513R001134420008-8

25246

S/122/60/000/003/014/015
A161/A130

1.6000

AUTHOR: Ministr, Z., Engineer (Czechoslovakia)

TITLE: What is new in powder metallurgy

PERIODICAL: Vestnik mashinostroyeniya, no. 3, 1960, 80 - 81

TEXT: The short article is a brief general review of development in the world. The following statements are made. A lately developed method consists in adding phosphorus to iron powder. The liquid constituent forming in sintering process works analogously with copper in mixture with iron powder and produces a surface with a high P content and 1,050°C melting point, and a peculiar structure with relatively high mechanical strength and elongation capacity. Aluminum, magnesium and their alloys are also coming into use in machine part production. Sintered aluminum powder is a fine mixture with aluminum oxide, and fine oxide powder raises strength, especially in high temperature. Sintered aluminum will be used ever more, particularly in aviation. Its application range is 150-540°C (or 1,000°F). This method is being used for Mg alloys as well. For instance, the American Dow Chemical Company, Midlard, Michigan has developed a new method of parts production from Mg alloy powders for armed forces. Ready powder is loaded

Card 1/2

APPROVED FOR RELEASE: 06/14/2000 CIA-RDP86-00513R001134420008-8"

"APPROVED FOR RELEASE: 06/14/2000 CIA-RDP86-00513R001134420008-8

25246

S/122/60/000/003/014/015
A161/A130

What is new in powder metallurgy

into a hopper over presses and heated to 320°C before pressing. Apart from alumin-
um powder, aluminum fiber is also coming into use. Porous fiber aluminum or alu-
minum alloy sheets are used, for example, for the front edge of aircraft wings.
They are also applicable for complex shapes. Fibers dispersed in a flow are
placed into a closed porous mold where they settle on the walls and are flattened.
Fibers are produced either mechanically, or by spraying molten metal. The producti-
vity of a simple and small installation is several tons per hour. There is 1
table.

Card 2/2

APPROVED FOR RELEASE: 06/14/2000 CIA-RDP86-00513R001134420008-8"

"APPROVED FOR RELEASE: 06/14/2000 CIA-RDP86-00513R001134420008-8

Z/031/61/009/003/003/003
A205/A126

AUTHOR: Ministr, Z., Engineer

TITLE: Quality evaluation of porous-metal bearing bushes

PERIODICAL: Strojírenská výroba, v. 9, no. 3, 1961, 131 - 133

TEXT: The use of porous-metal bearings, produced by powder-metallurgical technology, is rapidly expanding. In the ČSR, the use of such bearings is limited by the rather low quality of the bushings (loading capacity and lifetime) and their high price. The article lists quality tests performed with Czechoslovak porous-metal bearings and gives some directives for practical use. Laboratory-scale tests were performed with bushings produced by the "Kovohuty" National Enterprise in Mokrad', Slovakia. Most frequent causes of bearing failure are: (1) Lack of oil in voids; (2) insufficient porosity either of the total race, or of the sliding surface, especially its edges; (3) too small or too large voids; and (4) impurities on the sliding surface. Most of the samples which failed due to insufficient porosity, had densities ranging between 6.0 - 6.5 gr/cm^3, while densities of successful samples ranged below 6.0 gr/cm^3. East-German producers of porous-metal bearings list a very narrow range of permissible densities (5.7 - 5.8 gr/cm^3),

Card 1/2

APPROVED FOR RELEASE: 06/14/2000 CIA-RDP86-00513R001134420008-8"

"APPROVED FOR RELEASE: 06/14/2000 CIA-RDP86-00513R001134420008-8

Z/031/61/009/003/003/003
A205/A126

Quality evaluation of porous-metal bearing bushes

while the range of 5.4 - 6.2 gr/cm^3, permitted by ČSN Standards, is too wide. The ČSN Standard permits hardness of H_B = 25 - 35; the East-German producer lists a range of H_B = 30 - 35. A hardness of H_B = 35 corresponds with a metal density of 6.0 gr/cm^3. The minimum tensile strength of the bushing should be 7 - 9 kg/mm^2, however, since it is tedious to measure, it is commonly not checked. Porous-metal bearings have the highest loading capacity at a speed of 0.2 - 0.8 m/sec. Both, loading capacity and lifetime can be increased by additional lubricant supplied to the bearing surface. Bearings operating at higher speed should have a porosity of 25 - 30% and the thickest possible walls. In case the oil content of the voids does not suffice, additional lubrication should be supplied, e. g. from an oil-soaked felt ring, slipped over the bearing. There are 5 figures, 1 table, and 6 Soviet-bloc references.

ASSOCIATION: Výzkumný ústav příslušenství motorových vozidel, Praha (Research Institute for Automotive Accessories, Prague)

Card 2/2

APPROVED FOR RELEASE: 06/14/2000 CIA-RDP86-00513R001134420008-8"

"APPROVED FOR RELEASE: 06/14/2000 CIA-RDP86-00513R001134420008-8

MINISTR, Zdenek, inz.

Modern materials for motor vehicle bearings. Automobil Cz 7 no.7:202-205 Jl '63.

1. Vyzkumny ustav prislusenstvi motorovych vozidel, Praha.

APPROVED FOR RELEASE: 06/14/2000 CIA-RDP86-00513R001134420008-8"

"APPROVED FOR RELEASE: 06/14/2000 CIA-RDP86-00513R001134420008-8

MINISTR, Zdenek, inz.

Building in of bearing bushes from porous metals. Stroj vyr 11 no.7:338-340 '63.

1. Vyzkumny ustav prislusenstvi motorovych vozidel, Praha.

APPROVED FOR RELEASE: 06/14/2000 CIA-RDP86-00513R001134420008-8"

"APPROVED FOR RELEASE: 06/14/2000 CIA-RDP86-00513R001134420008-8

MINISTR, Zdenek, inz.

Development of the technology of part production from iron powder in the Soviet Union. Stroj vyr 11 no.11:576 N'63.

1. Vyzkumny ustav prislusenstvi motorovych vozidel, Praha.

APPROVED FOR RELEASE: 06/14/2000 CIA-RDP86-00513R001134420008-8"

"APPROVED FOR RELEASE: 06/14/2000 CIA-RDP86-00513R001134420008-8

L 49199-65 EWP(e)/EPF(c)/EPR/T/EWP(t)/EWP(k)/EWP(z)/EWP(b) Pf-4/Pr-4/Ps-4 DJ/JD

ACCESSION NR: AP5015404 CZ/0031/64/012/010/0725/0730 34 B

AUTHOR: Ministr, Zdenek (Engineer)

TITLE: Lubrication of bearings of porous metals

SOURCE: Strojirenska vyroba, v. 12, no. 10, 1964, 725-730

TOPIC TAGS: antifriction bearing lubrication, lubrication equipment, foam metal

Abstract: Described are self-aligning ball and sliding bearings made of porous metals. Systems described have a built-in automatic lubrication equipment, and may be used for higher speed. They are suitable for small electrical rotary machines with shafts having

APPROVED FOR RELEASE: 06/14/2000 CIA-RDP86-00513R001134420008-8"

"APPROVED FOR RELEASE: 06/14/2000 CIA-RDP86-00513R001134420008-8

lubrication equipment, and may be used for higher speed. They are suitable for small electrical rotary machines with shafts having diameters up to 10 or 15 millimeters. Discussed are the bearing capacity, the building in of bearings, amount of oil in the bearing and tank, flow of oil in the bearing, examples of use, and material for the manufacture of porous-metal bearings.

Orig. art. has 11 figures and 1 graph.

ASSOCIATION: Vyzkumny ustav prislusenstvi motorovych vozidel, Prague (Research Institute for Motor-Vehicle Accessories)

Card 1/2

APPROVED FOR RELEASE: 06/14/2000 CIA-RDP86-00513R001134420008-8"

"APPROVED FOR RELEASE: 06/14/2000 CIA-RDP86-00513R001134420008-8

L 49199-65

ACCESSION NR: AP5015404

SUBMITTED: 00 ENCL: 00 SUB CODE: IE, MM

NO REF SOV: 000 OTHER: 003 JPRS

Card 2/2

APPROVED FOR RELEASE: 06/14/2000 CIA-RDP86-00513R001134420008-8"

"APPROVED FOR RELEASE: 06/14/2000 CIA-RDP86-00513R001134420008-8

MIHITRAKOV, K.

Appendicitis as focal infection and its effect on the heart; cardio-appendicular syndrome. Izv. Med. inst., Sofia 2 no.3:99-122 1951. (CIML 22:1)

1. Doctor, Honary Docent in Cardiology.

APPROVED FOR RELEASE: 06/14/2000 CIA-RDP86-00513R001134420008-8"

"APPROVED FOR RELEASE: 06/14/2000 CIA-RDP86-00513R001134420008-8

ACCESSION NR: AT4040445 S/2748/63/004/000/0121/0127

AUTHORS: Paylodze, I. P.; Minitskaya, I. L.

TITLE: Linear interpolator in a digital programmed control system

SOURCE: AN GruzSSR. Institut elektroniki, avtomatiki i telemekhaniki. Trudy*, v. 4, 1963, 121-127

TOPIC TAGS: automatic control system, automatic machine, cutting tool, metalworking machine, servomechanism system

ABSTRACT: The programmed control system in question was designed at the Institut elektroniki, avtomatiki i telemekhaniki AN GruzSSR for metal cutting machinery and is claimed to incorporate many original approaches, both with respect to the block diagram and the circuitry and elements employed. The linear interpolator described is made an integral part of the entire control system so as to reduce to a minimum the necessary information conversion and to eliminate the

APPROVED FOR RELEASE: 06/14/2000 CIA-RDP86-00513R001134420008-8"

"APPROVED FOR RELEASE: 06/14/2000 CIA-RDP86-00513R001134420008-8

ACCESSION NR: AT4040445

unreliable reversible counter (comparison unit). The function of the latter is assumed by the interpolator itself, the operation of which is synchronized with the actuating unit. A signal initiating the next step of the cutting tool is produced by the interpolator only after the feedback signal indicating correct performance of the preceding step is received from the actuating mechanism. The operation of the interpolator as a computer unit, as a control unit, and as a servomechanism is described. The frequency divider, shift register, and digital gates of the interpolator were described elsewhere (the authors with A. G. Lekvinadze and V. V. Imedadze, Sistema tsifrovogo programnogo upravleniya metallorezhushchimi stankami, VINITI, Moscow, 1961.) The authors claim that the incorporation of the interpolator into the control system made it possible to simplify the system appreciably and at the same time increase operating reliability and flexibility. The use of ferrite-transistor elements increases the noise immunity and makes the system more compact. Most of the ferrite-transistor elements are of original design and were described

APPROVED FOR RELEASE: 06/14/2000 CIA-RDP86-00513R001134420008-8"

"APPROVED FOR RELEASE: 06/14/2000 CIA-RDP86-00513R001134420008-8

ACCESSION NR: AT4040445

elsewhere (V. V. Imedadze and I. P. Pavlodze, Trudy Instituta elektroniki, avtomatiki i telemekhaniki AN GruzSSR, v. 1, 1960). The main premises underlying the calculation of the interpolator parameters are briefly stated. Orig. art. has: 5 figures.

ASSOCIATION: Institut elektroniki, avtomatiki i telemekhaniki AN GruzSSR (Institute of Electronics, Automation, and Telemechanics, AN Gruz SSR)

SUBMITTED: 00 ENCL: 01

SUB CODE: IE, DP NR REF SOV: 002 OTHER: 000

Card 3/4

APPROVED FOR RELEASE: 06/14/2000 CIA-RDP86-00513R001134420008-8"

"APPROVED FOR RELEASE: 06/14/2000 CIA-RDP86-00513R001134420008-8

ACCESSION NR: AT4040445

ENCLOSURE: 01

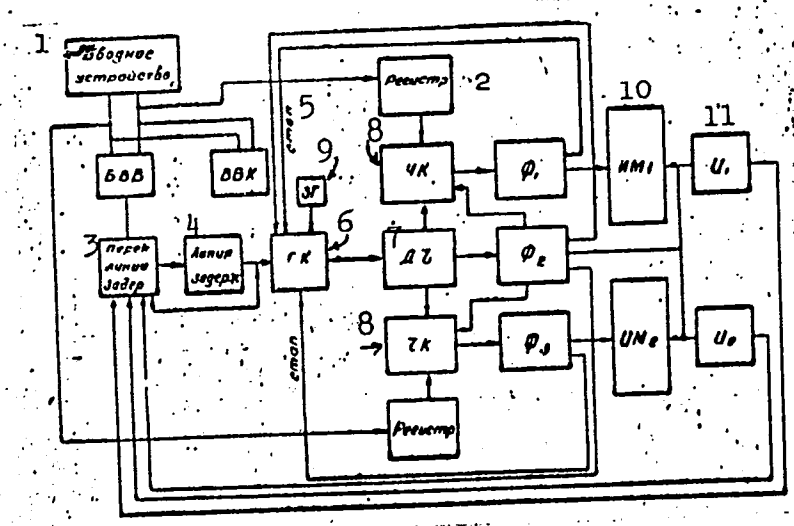

1 - input unit
2 - register
3 - delay line switch
4 - delay line
5 - stop
6 - main gate
7 - frequency divider
8 - number gates
9 - master generator
10 - actuating mechanism
11 - meter

Block diagram of programmed control system for lathe

Card 4/4

APPROVED FOR RELEASE: 06/14/2000 CIA-RDP86-00513R001134420008-8"

"APPROVED FOR RELEASE: 06/14/2000 CIA-RDP86-00513R001134420008-8

MINIUS, Vladas; SUMINAS, A., red.; PAKERYTE, O., tekhn. red.

[Light is still on in the operating room] Operacineje dar sviesu. Vilnius, Valstybine politines ir mokslines literaturos leidykla, 1961. 201 p. (MIRA 15:3)

(SURGERY, OPERATIVE)

APPROVED FOR RELEASE: 06/14/2000 CIA-RDP86-00513R001134420008-8"

"APPROVED FOR RELEASE: 06/14/2000 CIA-RDP86-00513R001134420008-8

NEKLESOVA, I.D.; MINIUSHEVA, Z. Sh.; KUDRINA, M.A.

Use of an organic phosphate ester in treating experimental trichophytosis in animals. Pat. fiziol. i eksp. terap. 5 no.5: 75-79 '61 (MIRA 17:4)

APPROVED FOR RELEASE: 06/14/2000 CIA-RDP86-00513R001134420008-8"

"APPROVED FOR RELEASE: 06/14/2000 CIA-RDP86-00513R001134420008-8

Minjineanu, M

The invariant of the propagation of electromagnetic energy in metallic circuits. p. 469. ELECTROTEHNICA. (Asociata Stiinifica a Engineerilor si Tehnicienilor din Rominia si Ministerul Energiei Electrice si Industriei Electrotehnice) Bucuresti. Vol. 3, no. 11, Nov. 1955

So. East European Accessions List Vol. 5, no 9 September, 1956

APPROVED FOR RELEASE: 06/14/2000 CIA-RDP86-00513R001134420008-8"

"APPROVED FOR RELEASE: 06/14/2000 CIA-RDP86-00513R001134420008-8

L 51087-65 EWT(m)/EWP(j) Pc-4 RM

ACCESSION NR: AP5015480 CZ/0031/64/012/012/0894/0897

12
B

AUTHOR: Mink, Walter (Meinerzhagen)

TITLE: Designing of the runners of molds for injection of thermoplastic materials

SOURCE: Strojirenska vyroba, v. 12, no. 12, 1964, 894-897

TOPIC TAGS: thermoplastic material, plastic fabricating machinery

Abstract: /author's Czech summary, modified/ Success in the technique of injection of thermoplastic materials depends on the use of the proper molds for injection. The article summarizes experience obtained in the development of runners of those molds and cites a number of suitable and unsuitable solutions. Orig. art. has 3 figures and 1 table.

ASSOCIATION: none

SUBMITTED: 00 ENCL: 00 SUB CODE: MT

NO REF SOV: 000 OTHER: 000 JPRS

Card 1/1

APPROVED FOR RELEASE: 06/14/2000 CIA-RDP86-00513R001134420008-8"

"APPROVED FOR RELEASE: 06/14/2000 CIA-RDP86-00513R001134420008-8

S/186/63/005/002/004/005
E075/E136

AUTHORS: Lapitskiy, A.V., Geletseanu, I., and Mink, Ya.

TITLE: Investigation of the complex formation of thorium with mandelic and α-oxyisobutyric acids

PERIODICAL: Radiokhimiya, v.5, no.2, 1963, 249-258

TEXT: The complexing with the acids was examined with a view to their utilization as eluants in the purification of Th by ion-exchange methods. To this end the adsorption of ^{234}Th was studied on cation exchanger resin Dowex 50 and 5 in the Na form. The work was carried out at the pH's of 1.75 to 2.5 to minimize the adsorption of Th on glass and because at this pH range the distribution coefficients were sufficiently large. The instability constants were calculated at pH = 2.2 by two methods, of which the method of S. Froneus (Acta Chi., Scand., v.4, no.1, 1950, 72) was considered the more reliable. The first instability constants for mandelic and α-isobutyric acid were 1.82×10^{-3} and 3.83×10^{-5} respectively. The second constants were 0.67×10^{-5} and 2.44×10^{-6}, and the third constants 1.92×10^{-7} and 8.34×10^{-9} respectively. Changes in the concentration of mandelic acid from

Card 1/2

APPROVED FOR RELEASE: 06/14/2000 CIA-RDP86-00513R001134420008-8"

"APPROVED FOR RELEASE: 06/14/2000 CIA-RDP86-00513R001134420008-8

Investigation of the complex ... S/186/63/005/002/004/005
E075/E136

0.01 to 0.1 M decrease the distribution coefficient by two orders of magnitude and a similar trend is shown for α-oxyisobutyric acid. The first complex $[Th\ A]^{3+}$ forms at the concentration of addend of 2×10^{-3} M. During further increases of the concentration up to about 10^{-2} M the composition of the complex changes to $[Th\ A_2]^{2+}$, $[Th\ A_3]^{+}$ and $[Th\ A_{3.5}]^{0.5+}$. In general, α-oxyisobutyric acid forms more stable complexes than mandelic acid and therefore is a more suitable eluent for the isolation of Th by ion exchange methods.
There are 13 figures and 7 tables.

SUBMITTED: January 18, 1962

Card 2/2

APPROVED FOR RELEASE: 06/14/2000 CIA-RDP86-00513R001134420008-8"

"APPROVED FOR RELEASE: 06/14/2000 CIA-RDP86-00513R001134420008-8

MINKA, A.F. [Mynka, A.F.]

Synthesis and properties of 5-alkyl-substituted derivatives of pseudothiohydantoin and 2,4-thiazolidinedione. Farmatsev. zhur. 18 no.4:24-27 '63. (MIRA 17:7)

1. Kafedra farmatsevticheskoy khimii L'vovskogo meditsinskogo instituta.

APPROVED FOR RELEASE: 06/14/2000 CIA-RDP86-00513R001134420008-8"

"APPROVED FOR RELEASE: 06/14/2000 CIA-RDP86-00513R001134420008-8

TURKEVICH, N.M.; MINKA, A.F.

Synthesis of thiazolidone derivatives of biological interest. Part 22: Infrared absorption spectra of pseudothiohydantoin and 2,4-thiazolidinedione. Zhur. ob. khim. 35 no.5:884-885 My '65. (MIRA 18:6)

1. L'vovskiy meditsinskiy institut.

APPROVED FOR RELEASE: 06/14/2000 CIA-RDP86-00513R001134420008-8"

"APPROVED FOR RELEASE: 06/14/2000 CIA-RDP86-00513R001134420008-8

AKIMOV, V.S.; ABRAMOVICH, S.Sh.; MINKAYROVA, S.S.

Laboratory investigation of the combined dewaxing and deoiling of raffinates from Tuymazi oil and a mixture from Volgograd oil. Trudy BashNII NP no.7:46-52 '64. (MIRA 17:9)

APPROVED FOR RELEASE: 06/14/2000 CIA-RDP86-00513R001134420008-8"

"APPROVED FOR RELEASE: 06/14/2000 CIA-RDP86-00513R001134420008-8

MINKEL'DEY, M.A., kandidat tekhnicheskikh nauk; SELEZNEVAYA, E.S. kandidat fiziko-matematicheskikh nauk, redaktor; MAKSIMOVA, I.G., redaktor; BRAININA, M.I., tekhnicheskiy redaktor.

[M.M.Pomortsev; first Russian aerologist] M.M.Pomortsev; pervyi russkii aerolog. Pod red. E.S. Seleznevoi. Leningrad, Gidrometeorologicheskoe izd-vo, 1954. 74 p. (MLRA 7:10)
(Pomortsev, Mikhail Mikhailovich, 1851-1916) (Meteorology)

APPROVED FOR RELEASE: 06/14/2000 CIA-RDP86-00513R001134420008-8"

"APPROVED FOR RELEASE: 06/14/2000 CIA-RDP86-00513R001134420008-8

MINKELUDEV, M.A., kandidat tekhnicheskikh nauk.

Lightweight prestressed reinforced concrete dam in Scotland. Gidr. stroi. 26 no.5:54-55 My '57. (MLRA 10:6)
(Scotland--Dams)

APPROVED FOR RELEASE: 06/14/2000 CIA-RDP86-00513R001134420008-8"

"APPROVED FOR RELEASE: 06/14/2000 CIA-RDP86-00513R001134420008-8

SOV/97/58/2/13/16

AUTHOR: Minkel'dey, M.A., Candidate of Technical Sciences.

TITLE: Large Assembled Reinforced Concrete Water Reservoir. (Sbornyy zhelezobetonnyy rezervuar bol'shoy yemkosti dlya vody).

PERIODICAL: Beton i Zhelezobeton, 1958, Nr 2 pp 76-77.

ABSTRACT: This is an abstract from "Concrete and Constructional Engineering, 1956, Nr 7. There are four figures.

1. Dams--Construction 2. Reinforced concrete--Applications

Card 1/1

APPROVED FOR RELEASE: 06/14/2000 CIA-RDP86-00513R001134420008-8"

"APPROVED FOR RELEASE: 06/14/2000 CIA-RDP86-00513R001134420008-8

MINKER, E.

Data on information regarding the vegetative nervous system of cats. In German. p. 209.
(ACTA BIOLOGICA. Vol. 2, no. 1/4, Dec. 1956, Hungary)

SO: Monthly List of East European Accessions (EEAL) LC. Vol. 6, no. 12, Dec. 1957.
Uncl.

APPROVED FOR RELEASE: 06/14/2000 CIA-RDP86-00513R001134420008-8"

"APPROVED FOR RELEASE: 06/14/2000 CIA-RDP86-00513R001134420008-8

MINKER, E.; ABRAHAM, A.

Innervation of the intestinal canal of the medical leech (Hirudo med. L.).
p. 139

A MAGYAR TUDOMANYOS AKADEMIA V. OSZTALYA BIOLOGIAI CSOPORTJANAK KOZLEMENYEI.
Budapest, Hungary. Vol. 2, no. 2, 1958.

Monthly List of East European Accession (EEAI), LC, Vol. 9, no. 2, Feb. 1960

Uncl.

APPROVED FOR RELEASE: 06/14/2000 CIA-RDP86-00513R001134420008-8"

"APPROVED FOR RELEASE: 06/14/2000 CIA-RDP86-00513R001134420008-8

DOMJAN, Gyula (Beloiannisz-ter, 8. Szeged, Ungarn); MINKER, Emil (Beloiannisz-ter 12, Szeged, Ungarn)

Investigation of phosphomonoesterases in the central ganglia of snails (Helic pomatia). Acta biol Hung 11 no.3:219-229 '60. (EEAI 10:4)

1. Chemisches und Biochemisches (Vorstand: A Kramli) sowie Pharmakologisches Institut (Vorstand: N.Jancso) der Medizinischen Universitat, Szeged.

(SNAILS)
(NERVES)
(PHOSPHATASES)

APPROVED FOR RELEASE: 06/14/2000 CIA-RDP86-00513R001134420008-8"

"APPROVED FOR RELEASE: 06/14/2000 CIA-RDP86-00513R001134420008-8

MINKER, Emil (Szeged, Beloiannisz ter 12, Hungary.);
DOMJAN, Gyula (Szeged, Beloiannisz ter 8., Hungary.)

Histochemical studies of phosphatases in the intramural ganglion cells of the intestinal canal of Helix pomatia.
Acta biol Hung 12 no.2:137-140 '61.

1. Institute of Pharmacology (Head: M. Jancso) and Institute of Medical Chemistry and Biochemistry (Head: M. Kramli), Medical University, Szeged.

*

APPROVED FOR RELEASE: 06/14/2000 CIA-RDP86-00513R001134420008-8"

"APPROVED FOR RELEASE: 06/14/2000 CIA-RDP86-00513R001134420008-8

MINKER, Emil (Szeged, Beloiannisz ter, 12, Hungary); KOLTAI, Matyas, (Szeged, Beloiannisz ter, 12, Hungary)

Studies on isolated organs of gastropods. Acta biol Hung 12 no.3:199-209 '61.

1. Pharmakologisches Institut, Medizinische Universitat, Szeged (Vorstand: M. Jancso).

APPROVED FOR RELEASE: 06/14/2000 CIA-RDP86-00513R001134420008-8"

"APPROVED FOR RELEASE: 06/14/2000 CIA-RDP86-00513R001134420008-8

MINKER, Emil; KOLTAI, Matyas

Investigations in the interactions of ganglionic-blocking agents and potassium salts. Acta physiol Hung 20 no.2:187-195 '61.

1. Pharmakologisches Institut der Medizinischen Universitat, Szeged.

APPROVED FOR RELEASE: 06/14/2000 CIA-RDP86-00513R001134420008-8"

"APPROVED FOR RELEASE: 06/14/2000 CIA-RDP86-00513R001134420008-8

MINKER, E.; KOLTAI, M.

On the effect of ganglion-stimulating substances following the treatment with ganglion-blocking agents. Acta physiol. acad. sci. hung. 20 no.4:411-420 '61.

1. Pharmakologisches Institut der Medizinischen Universitat, Szeged.

(AUTONOMIC DRUGS pharmacol)

APPROVED FOR RELEASE: 06/14/2000 CIA-RDP86-00513R001134420008-8"

"APPROVED FOR RELEASE: 06/14/2000 CIA-RDP86-00513R001134420008-8

MINKER, E.; KOLTAI, M.

Modification of the action of the ganglion-blocking agents hexamethonium, D-tubocurarine and TEAB by heparin. Acta physiol. acad. sci. hung. 22 no.1:99-109 '62.

1. Pharmakologisches Institut der Medizinischen Universitat, Szeged.
(HEXAMETHONIUM COMPOUNDS) (TUBOCURARINE)
(TETRAETHYLAMMONIUM COMPOUNDS) (HEPARIN)

APPROVED FOR RELEASE: 06/14/2000 CIA-RDP86-00513R001134420008-8"

"APPROVED FOR RELEASE: 06/14/2000 CIA-RDP86-00513R001134420008-8

MINKER, E.; KOLTAI, M.

Studies on the ganglionic action of sulfamethylthiazole. Acta physiol. acad. sci. hung. 22 no.1:111-117 '62.

1. Pharmakologisches Institut der Medizinisches Universitat, Szeged.
(SULFTHIAZOLES) (GANGLIONIC BLOCKING AGENTS)

APPROVED FOR RELEASE: 06/14/2000 CIA-RDP86-00513R001134420008-8"