"APPROVED FOR RELEASE: Wednesday, June 21, 2000 CIA-RDP86-00513R00113

BYSTROV, V.F.; STEPANYANTS, A.U.; MIRONOV, V.A.

Structure of chemical compounds as determined by nuclear magnetic resonance spectra. Part 17: Structure of some derivatives of bicyclo (2,2,1) heptane. Zhur.org.khim. 1 no.2:294-296 F '65. (MIRA 18:4)

1. Institut organicheskoy fiziki AN SSSR i Institut khimicheskoy fiziki AN SSSR.

APPROVED FOR RELEASE: Wednesday, June 21, 2000 CIA-RDP86-00513R001134

"APPROVED FOR RELEASE: Wednesday, June 21, 2000 CIA-RDP86-00513R00113

NEFED'YEVA, N.P.; PETRUSHINA, L.I.; BAKINA, M.N.; PARIZH, B.M.; MIRONOV, V.A.

Lyophilization of type-specific staphylococcus phages. Zhur. mikrobiol., epid. i immun. 42 no.4:121-125 Ap '65. (MIRA 18:5)

1. Institut pitaniya AMN SSSR, Gosudarstvennyy kontrol'nyy institut meditsinskikh biologicheskikh preparatov imeni Tarasevicha i Institut virusnykh preparatov, Moskva.

APPROVED FOR RELEASE: Wednesday, June 21, 2000 CIA-RDP86-00513R001134

"APPROVED FOR RELEASE: Wednesday, June 21, 2000 CIA-RDP86-00513R00113

APPROVED FOR RELEASE: Wednesday, June 21, 2000 CIA-RDP86-00513R001134

"APPROVED FOR RELEASE: Wednesday, June 21, 2000 CIA-RDP86-00513R00113

SOBOLEV, Ye.V.; MIRONOV, V.A.; FADEYEVA, T.M.

Substituted cyclopentadienes and related compounds. Report 14: Special features of the vibrational spectra of adducts of substituted cyclopentadienes with maleic anhydride. Izv. AN SSSR. Ser. khim. no.8:1357-1363 '65. (MIRA 18:9)

1. Institut organicheskoy khimii im. N.D. Zelinskogo AN SSSR i Institut neorganicheskoy khimii Sibirskogo otdeleniya AN SSSR.

APPROVED FOR RELEASE: Wednesday, June 21, 2000 CIA-RDP86-00513R001134

"APPROVED FOR RELEASE: Wednesday, June 21, 2000 CIA-RDP86-00513R00113

YEGOROV, N.S.; TOROPOVA, Ye.G.; [illegible]AKOVA, [illegible].I.; MIKHAYLOVA, [illegible].; MI[illegible]ONCY, [illegible].A.

Formation of novobiocin in the dynamics of the development of Actinomyces spheroides culture on a synthetic medium with various nitrogen sources. Antibiotiki 1[illegible] no.8:6[illegible]-[illegible] Ag '65. (MIRA 18:9)

1. Kafedra mikrobiologii Moskovskogo gosudarstvennogo universiteta imeni M.V. Lomonosova.

APPROVED FOR RELEASE: Wednesday, June 21, 2000 CIA-RDP86-00513R001134

"APPROVED FOR RELEASE: Wednesday, June 21, 2000 CIA-RDP86-00513R00113

MIRONOV, V.A., YEGOROV, N.S.

Effect of ammonium sulfate on the development of [illegible] spheroides and the formation of novobiocin [illegible] mikrobiol. [illegible] 1 no.5:587-590 [illegible] '65.

1. Moskovskiy gosudarstvennyy [illegible] mer. M.V. Lomonosova, biologo-pochvennyy fakul'tet.

APPROVED FOR RELEASE: Wednesday, June 21, 2000 CIA-RDP86-00513R001134

"APPROVED FOR RELEASE: Wednesday, June 21, 2000 CIA-RDP86-00513R00113

MIRONOV, V. D. Cand. Tech. Sci.

Dissertation: "Concerning Calculation of Constant-Speed Is[illegible]" All-Union Order of the Labor Red Banner Sci. [illegible] Engineering [illegible] Dzerzhinskiy, 23 Apr [illegible].

SO: Vechernyaya Moskva, [illegible], [illegible] (Project #[illegible])

APPROVED FOR RELEASE: Wednesday, June 21, 2000 CIA-RDP86-00513R001134

"APPROVED FOR RELEASE: Wednesday, June 21, 2000 CIA-RDP86-00513R00113

N 64

SA

101. Automatic regulators, system VTI.—Moscow, V. D. *Elektr. St.* (No. 7) 8-13 (1948) *In Russian.*—New Russian types are described in detail. The following are used as reference instruments: thermometers, thermocouples (some of special high speed type), differential manometers, etc.; as master, a special contact galvanometer with Hg contacts of closure time constant up to 6 sec and a sensitivity of $10^{-10}$ W, and an ingenious servomotor combining the action of a motor, reduction gear train, adjustable limiter and an electric brake. The motor is 1 kW 3-ph., the gear box operates over 1 to 2 r.p.m., limiting takes place over any angle between 30° and 270°. An elastic degenerative link system is obtained by the use of an electrothermal "isodrome"—a combination of balanced thermocouples and switched electric heaters operated by the input and output of the complete system. Several applications of the regulator are described. A. L.

ASM-SLA METALLURGICAL LITERATURE CLASSIFICATION

APPROVED FOR RELEASE: Wednesday, June 21, 2000 CIA-RDP86-00513R001134

"APPROVED FOR RELEASE: Wednesday, June 21, 2000 CIA-RDP86-00513R001134

USSR/Engineering - Automatic Control Jan 52

"Calculation and Adjustment of the Single-Impulse Electronic Feed-Water Regulator," Cand Tech Sci, V. D. Mironov, Laureate of Stalin Prize, A. V. Naumov, Engr, Lab of Automatic Regulation

"Iz v-s Teplotekh Inst" No 1, pp 1-9

Briefly reviews automatic feed-water regulating systems in boilers and describes system of 2 single-impulse electronic regulators with combined fixed and variable feedback. Discusses dynamic

203T21

USSR/Engineering - Automatic Control (Contd) Jan 52

properties of zone under regulation and develops formulas for calcg adjustment of regulators and for evaluating quality of regulation.

203T21

MIRONOV, V. I.

APPROVED FOR RELEASE: Wednesday, June 21, 2000 CIA-RDP86-00513R001134

"APPROVED FOR RELEASE: Wednesday, June 21, 2000 CIA-RDP86-00513R00113

MIRONOV, V. D.

Electronic Control

Automatic electronic device of the VTI system. Rab. energ., [illegible], no. [illegible], [illegible].

Monthly List of Russian Accessions, Library of Congress, November 1952. UNCLASSIFIED.

APPROVED FOR RELEASE: Wednesday, June 21, 2000 CIA-RDP86-00513R001134

"APPROVED FOR RELEASE: Wednesday, June 21, 2000 CIA-RDP86-00513R001134

USSR/Engineering - Automatic Control, Servo-mechanisms Jul 52

"Electronic Follow-Up System," V.D. Mironov, Cand Tech Sci, Stalin Prize Laureate, Ye.N. Minyayev, Engr, Lab of Automatic Regulation, "Energodetal'" Plant

"Iz V-S Teplotekh Inst" No 7, pp 14-17

PA 233T28

Describes simplified follow-up system developed at VTI for cases when identical shifting of several regulating members from single automatic regulator is required. Electronic following device of ESP type is specific element of this system which permits parallel

233T28

or in-series connections. Describes parallel electronic follow-up system in application to servomotors of KDU type.

233T28

MIRONOV, V. D.

APPROVED FOR RELEASE: Wednesday, June 21, 2000 CIA-RDP86-00513R001134

"APPROVED FOR RELEASE: Wednesday, June 21, 2000 CIA-RDP86-00513R00113

PA 233T24

USSR/Engineering - Containers, Hydraulic Aug 52
Testing

"Hydraulic Test of Welded Containers in Serial Production," L. I. Blagodatskiy, Engr

"Avtogen Delo" No 8, pp 23, 24

Describes stand for simultaneous hydraulic testing of 11 railroad-car air tanks of 55-l capacity. Stand is equipped with system of pipelines for filling tanks with water or air. Gives sequence of testing operations and outlines advantages of method.

233T24

APPROVED FOR RELEASE: Wednesday, June 21, 2000 CIA-RDP86-00513R001134

"APPROVED FOR RELEASE: Wednesday, June 21, 2000 CIA-RDP86-00513R00113

MIRONOV, V. D.; NAUMOV, A. V.

Feed Water

Calculation and arrangement of a single-phase electronic regulator of feed water. Izv. VTI 21 no. 1, 195[illegible].

Monthly List of Russian Accessions, Library of Congress, April 195[illegible]. UNCLASSIFIED.

APPROVED FOR RELEASE: Wednesday, June 21, 2000 CIA-RDP86-00513R001134

"APPROVED FOR RELEASE: Wednesday, June 21, 2000 CIA-RDP86-00513R00113

MIRONOV, V. I.

Electronic Control

Adjustment of electronic controllers.
Izv. VTI 21, No. 4, 1952.

9. Monthly List of Russian Accessions, Library of Congress, August 1952. UNCLASSIFIED.

APPROVED FOR RELEASE: Wednesday, June 21, 2000 CIA-RDP86-00513R001134

"APPROVED FOR RELEASE: Wednesday, June 21, 2000 CIA-RDP86-00513R00113

MINYAYEV, YE. N., MIRONOV, V. D.

Electronics

Electronic tracing system.
Izv. VTI 21, No. 7, 1952.

9. Monthly List of Russian Accessions, Library of Congress, October 1952. UNCLASSIFIED.

APPROVED FOR RELEASE: Wednesday, June 21, 2000 CIA-RDP86-00513R001134

"APPROVED FOR RELEASE: Wednesday, June 21, 2000 CIA-RDP86-00513R00113

MIRONOV, V. D.

Governors (Steam Engine)

Improved VTI electronic governor.
Izv. VTI 21, No. 7, 1952.

9. Monthly List of Russian Accessions, Library of Congress, October 1952[redacted]. Unclassified.

APPROVED FOR RELEASE: Wednesday, June 21, 2000 CIA-RDP86-00513R001134

"APPROVED FOR RELEASE: Wednesday, June 21, 2000 CIA-RDP86-00513R00113

Mironov V. D

621.316.71.076.7 : 621.187.1

4118. Three-impulse electronic regulation of boiler feedwater. V. D. MIRONOV AND A. V. NAUMOV. *Elekt. Stantsii*, [redacted] *In Russian.*

The operation of a regulator controlled simultaneously by water level, water flow and steam consumption is analysed theoretically. Test data of the regulator's performance are presented graphically and discussed in detail. The main advantages over a regulator controlled by water level only are reduction of the tendency to over-swing in relation to steam consumption; shortening of the period of unbalance following large changes of load, or of feedwater pressure. Water and steam flow indicators have square-law characteristics, and further improvement in dynamic performance is expected with linear indicators.

F. QUELON

APPROVED FOR RELEASE: Wednesday, June 21, 2000 CIA-RDP86-00513R001134

"APPROVED FOR RELEASE: Wednesday, June 21, 2000 CIA-RDP86-00513R00113

MIRONOV, Vadim Dmitriyevich; STEFANI, Evgeniy Pavlovich; DULEYEV, Ye. M., redaktor; LARIONOV, G.Ye., tekhnicheskiy redaktor.

[Electronic automatic regulators of heating processes] Elektronnye avtomaticheskie reguliatory teplovykh protsessov. Moskva, Gos.energ.izd-vo, 1955. 223 p. (MLRA 8:12)
(Heat engineering) (Automatic control)

APPROVED FOR RELEASE: Wednesday, June 21, 2000 CIA-RDP86-00513R001134

"APPROVED FOR RELEASE: Wednesday, June 21, 2000 CIA-RDP86-00513R00113

Subject : USSR/Power Eng. AID P - 4078

Card 1/2 Pub. 110-a - 3/14

Author : Mironov, V. D., Kand. Tech. Sci. All-Union Heat Engineering Institute.

Title : On dynamic properties of pressure and steam discharge in drum boilers.

Periodical : Teploenergetika, 12, 14-22, D 1955

Abstract : The control and regulation of steam pressure at automatic power plants requires further study and discussions on transient conditions of simultaneously operating boilers. The article presents an analysis of boilers steam output and of the steam-forming processes, e.g., circulation, draft. The superheaters' resistance and the number of simultaneously working boilers is of great importance. Nine diagrams. Eight Russian references, 1951-1955.

APPROVED FOR RELEASE: Wednesday, June 21, 2000 CIA-RDP86-00513R001134

"APPROVED FOR RELEASE: Wednesday, June 21, 2000 CIA-RDP86-00513R00113

Teploenergetika, 12, 14-22, D 1955 AID P - 4078

Card 2/2 Pub. 110-a - 3/14

Institution : None

Submitted : No date

APPROVED FOR RELEASE: Wednesday, June 21, 2000 CIA-RDP86-00513R001134

"APPROVED FOR RELEASE: Wednesday, June 21, 2000 CIA-RDP86-00513R00113

MIRONOV, V.D., kandidat tekhnicheskikh nauk.

Systems for automatic control of combustion with the use of oxygen meters. Teploenergetika 3 no.11:25-29 N '56.

(MLRA 9:12)

1. Vsesoyuznyy teploteknicheskiy institut.
(Automatic control) (Combustion) (Oxygen--Analysis)

APPROVED FOR RELEASE: Wednesday, June 21, 2000 CIA-RDP86-00513R001134

"APPROVED FOR RELEASE: Wednesday, June 21, 2000 CIA-RDP86-00513R00113

Subject : USSR/Engineering AID P - 5011

Card 1/1 Pub. 110-a - 13/17

Author : Mironov, V. D., Kand. Tech. Sci.

Title : Oxygen measuring device (Chronicle)

Periodical : Teploenergetika, 9, 61, S 1956

Abstract : The author describes the new gas analyzer for oxygen manufactured in the All-Union Heat Engineering Institute. The device is used for the automatic electronic control of the efficiency of combustion in stationary steam boilers. Diagram.

Institution : None

Submitted : No date

APPROVED FOR RELEASE: Wednesday, June 21, 2000 CIA-RDP86-00513R001134

"APPROVED FOR RELEASE: Wednesday, June 21, 2000 CIA-RDP86-00513R00113

MIRONOV, V. I., kandidat tekhnicheskikh nauk.

Setting regulators for steam pressure and fuel delivery [with summary in English]. Teploenergetika 4 no.8:3-9 Ag '57. (MIRA 10:9)

1. Vsesoyuznyy teplotekhnicheskiy institut.
(Boilers)

APPROVED FOR RELEASE: Wednesday, June 21, 2000 CIA-RDP86-00513R001134

"APPROVED FOR RELEASE: Wednesday, June 21, 2000 CIA-RDP86-00513R00113

[illegible], V. [illegible].

"On the operation of an electronic hydraulic regulator."

report presented at the Second Conf. on the Problem of [illegible] Automation, at Inst. of Automation, [illegible], 1 - [illegible] Mar. [illegible].

APPROVED FOR RELEASE: Wednesday, June 21, 2000 CIA-RDP86-00513R001134

"APPROVED FOR RELEASE: Wednesday, June 21, 2000 CIA-RDP86-00513R00113

AUTHOR: Mironov, V.D., Cand.Tech.Sci. SOV/96-58-6-18/24

TITLE: General industrial automatic regulators in Western Germany. (Avtomaticheskiye regulyatory obshchepromyshlennogo naznacheniya v zapadnoy Germanii)

PERIODICAL: Teploenergetika, 1958, No.6. pp. 84-88 (USSR)

ABSTRACT: This article is based on material collected at the 1957 Dusseldorf Exhibition of control instruments and automatic equipment. German firms provided 65% of the exhibits. After a brief introductory statement on the services that are commonly provided to purchasers of instruments, the products of the different firms are described in turn and at some length. Eight schematic or circuit diagrams are given. No special comment is made. There are 10 figures.

1. Control systems--Equipment 2. Control system--Germany

Card 1/1

APPROVED FOR RELEASE: Wednesday, June 21, 2000 CIA-RDP86-00513R001134

"APPROVED FOR RELEASE: Wednesday, June 21, 2000 CIA-RDP86-00513R00113

AUTHOR: Mironov, V.D. (Candidate of Technical Science) SOV/[illegible]

TITLE: The Automation of the Combustion Process (Ob avtomatizatsii protsessa goreniya)

PERIODICAL: Teploenergetika, 1958, Nr 9, pp 8 - 19 (USSR)

ABSTRACT: For a long time the only automatic equipment in power plants was the turbine governor and the water-level control in the boiler drum, the combustion process being manually controlled. This is no longer satisfactory, and the present article describes the evolution of automatic equipment. The simplest control scheme, which was used on large boilers for a long time, is illustrated schematically in Fig 1a. The steam-pressure regulator receives signals from a manometer and acts on the fuel- and air-regulators of all boilers operating in parallel. The pressure regulator can usually maintain constant pressure irrespective of boiler loading, but simpler control systems are still used which are based on a static pressure regulator, usually a manometer (Fig 1b). In this case the pressure varies with the load. A major difficulty with circuits of this kind is that of measuring the fuel consumption accurately, because the fuel varies

1/10

APPROVED FOR RELEASE: Wednesday, June 21, 2000 CIA-RDP86-00513R001134

"APPROVED FOR RELEASE: Wednesday, June 21, 2000 CIA-RDP86-00513R00113



in mechanical structure and chemical composition. It is particularly difficult to control combustion of solid pulverised fuel in this way. This control system is currently used only in small boilers burning fuel-oil or occasionally gas. Efforts to improve combustion control systems centred on regulating the actual intensity of the furnace process. One scheme depends on manometric measurements of the pressure in the boiler drum. A special feature of the circuit, shown in bold lines in Fig 2, is that there is no control of steam pressure in the collector main, but individual regulators stabilise the pressure in the boiler drums. With this scheme the pressure in the steam main can vary, because it differs from the pressure in the drums by the amount of the pressure drop in the superheater. There are various ways of overcoming this, one of them being to use a correcting steam-pressure regulator in the steam main, as shown in dotted lines in Fig 2. More accurate distribution of load in a system with a correcting regulator can be obtained by using a steam meter, as shown by the bold lines in Fig 3. This



APPROVED FOR RELEASE: Wednesday, June 21, 2000 CIA-RDP86-00513R001134

"APPROVED FOR RELEASE: Wednesday, June 21, 2000 CIA-RDP86-00513R00113

The Automation of the Combustion Process SOV/[illegible]

sensitive instrument gives better dynamic response to external disturbances. Still better dynamic behavior of the fuel regulator was obtained by introducing an additional signal from a single manometer through a differentiator, which gives the so-called 'heat-fuel' scheme dotted in Fig [illegible]. This system had acceptable dynamic properties and gave reasonable load distribution. However, the search for methods of making the combustion process more efficient continued. The need is to control the excess air in the boiler, and attempts have been made to construct a regulator for adjusting the air flow according to the steam consumption in what is known as the 'steam-air' circuit. This circuit has various disadvantages. It cannot be used with wet fuel, its dynamic properties are not good. Attempts that have been made to improve it are shown in Figs 4a dotted, 4b and finally 4c, which is the so-called 'heat-air' scheme. This, the best indirect method [illegible], the thermal load both for stabilisation of thermal conditions and for increasing combustion efficiency, consists in measuring the heat from the sum of signals from a steam meter and a manometer

Card 3/10

APPROVED FOR RELEASE: Wednesday, June 21, 2000 CIA-RDP86-00513R001134

"APPROVED FOR RELEASE: Wednesday, June 21, 2000 CIA-RDP86-00513R00113

The Automa[illegible] P[illegible] S[illegible]

through a [illegible]. There are [illegible] distinct methods of doing [illegible] [illegible]ally in Figs 5a and 5b. In the event of [illegible] [illegible], the first scheme operates the fuel-[illegible] before the air-regulator, which has various [illegible]. In the second scheme, the fuel- and air-regulator [illegible] together, and the circuit is simpler and [illegible]. All these control methods depend more or less on measuring the steam output of the boilers. There are, however, [illegible] methods of controlling the furnace process. In [illegible] system, for a direct flow boiler, the thermal conditions are stabilised by reference to the temperature of the [illegible] flue gas. However, changes in the slagging of heating surfaces or in the excess-air factor affect this control system. The intensity of radiation from the burners can be used to control furnace load; photo cells and water tubes have been tried for this purpose and were found to have good dynamic but poor static characteristics. Methods based on furnace-gas analysis have been much more widely applied. In principle, any of the constituent gases can be used for this purpose but the carbon dioxide

Card 4/10

APPROVED FOR RELEASE: Wednesday, June 21, 2000 CIA-RDP86-00513R001134

"APPROVED FOR RELEASE: Wednesday, June 21, 2000 CIA-RDP86-00513R00113

The Automation of the Combustion Process SOV/[illegible]

and oxygen contents are favoured. Oxygen measurements are most accurate when there is little excess air, that is when the furnace is working well, and this is when $CO_2$ control gives the greatest errors. The merits of control in terms of gas [illegible] are discussed, and the conditions under which chemically- or mechanically-incomplete combustion can be [illegible] to a minimum are analysed. When burning solid and liquid fuel a certain application of time and [illegible] is required to gasify the fuel. If there is [illegible] gasification zone is cool and not all [illegible] If there is not enough air combustion is [illegible]. It is concluded that at present [illegible] universal criterion of the quality of [illegible] is the oxygen content in the furnace [illegible] prospects of achieving [illegible] combustion [illegible] chemically-incomplete control by [illegible] in this is required. Furnace for creating [illegible] offers wide possibilities of improving [illegible]. One possible method [illegible] is shown in Fig 7a.

Card 5/10

APPROVED FOR RELEASE: Wednesday, June 21, 2000 CIA-RDP86-00513R001134

"APPROVED FOR RELEASE: Wednesday, June 21, 2000 CIA-RDP86-00513R00113

The Automation of the Combustion P[illegible] SOV/[illegible]

In this [illegible] corrected by an oxygen meter, corrects the [illegible]. The circuit given in Fig 7b achieves [illegible] of load between boilers, because the [illegible] on the fuel regulator. In [illegible] boiler is established by the [illegible] conditions. [illegible] with the draught into the boiler [illegible] by leakages of air on, but these [illegible] the air duct and so control [illegible] by using draught 8b. The [illegible] diagrammatically in Figs 8a and simplified [illegible] complicated and can be [illegible] is replaced by direct [illegible] appropriate regulator. A [illegible] in the air-supply is shown in Fig [illegible] initial circuit (Fig 7a), in this [illegible] pressure regulator acts directly only [illegible]. There is [illegible] delay in [illegible] correct value because [illegible] meter. Attempts have been made [illegible] by adding a special thermal

Card 6/10

APPROVED FOR RELEASE: Wednesday, June 21, 2000 CIA-RDP86-00513R001134

"APPROVED FOR RELEASE: Wednesday, June 21, 2000 CIA-RDP86-00513R00113

A [illegible] of the Combustion Process SOV/ [illegible] / [illegible]

[illegible] regulator based on the 'heat-fuel' principle (Fig. [illegible]). [illegible] arrangement is elaborate and requires very [illegible] [illegible]. A better solution entails simplifying [illegible] shown in Fig 7b by transferring the [illegible] regulator directly to a regulator [illegible] [illegible] the furnace load. With [illegible] [illegible] which [illegible] described, this [illegible] [illegible] Fig 10; full-scale [illegible] [illegible] The circuit contains some [illegible] [illegible] limiting devices to prevent excessively [illegible] [illegible] of the boiler. It is [illegible] [illegible] independent fuel-supply [illegible] [illegible] those with shaft mills [illegible] [illegible] relationship between the fuel supply [illegible] [illegible] conditions; these boilers require [illegible] [illegible]. The simplest example, illustrated in Fig. [illegible] [illegible] control system for a boiler [illegible] [illegible] [illegible] delivery of [illegible] [illegible] regulator must play a leading part in [illegible] [illegible] control system. The principles [illegible]

APPROVED FOR RELEASE: Wednesday, June 21, 2000 CIA-RDP86-00513R001134

"APPROVED FOR RELEASE: Wednesday, June 21, 2000 CIA-RDP86-00513R00113

A [illegible] Combustion Processes SOV/[illegible]

explained, including methods of allowing for changes in [illegible] chemical structure and quality of the fuel. [illegible]

[illegible] be appreciably [illegible] complicated by the additional [illegible] It has been [illegible] the mill to the furnace are [illegible] in the delivery of the [illegible] the mill. However, [illegible] contrary [illegible] the mill. Other [illegible] are [illegible] concluded that the best combination of the [illegible] circuits is obtained with [illegible] The [illegible] Other [illegible] team [illegible] other further increased the [illegible] In addition, [illegible]

APPROVED FOR RELEASE: Wednesday, June 21, 2000 CIA-RDP86-00513R001134

"APPROVED FOR RELEASE: Wednesday, June 21, 2000 CIA-RDP86-00513R00113



is required for milling and the quantity of [illegible] is reduced. This tends to prevent the fire [illegible] overloaded with wet peat and at the same time, [illegible] the excess air, which is the correct solution in [illegible] It is important to develop a good combustion control system for boilers with cyclone pre-furnaces, which will [illegible] widely used. A possible circuit is shown on Fig 19, and differs from the circuit for a boiler with shaft mills by the use on each pre-furnace of a cyclone load regulator operated from the oxygen meter. The control circuits that have been considered all pertain to a number of boilers working on a common main. With the introduction of [illegible] turbine unit sets, other control systems will probably be required. However, present indications are that [illegible] systems can be used or will need much modification. For example, a control system for a unit set [illegible] fuel oil, or pulverized fuel is shown in Fig 14. It is obtained by simplifying the circuit shown in Fig 10 and [illegible] milling elements to protect the unit from very low steam pressure. Of the circuits that have been described, the only ones that have been tested in practice are those

APPROVED FOR RELEASE: Wednesday, June 21, 2000 CIA-RDP86-00513R001134

"APPROVED FOR RELEASE: Wednesday, June 21, 2000 CIA-RDP86-00513R00113

T[illegible] A[illegible] of the Combustion Process SOV/[illegible]

[illegible] are intended for boilers with [illegible] pulverised fuel received [illegible] from an [illegible] [illegible]. The others will need practical verification.

There are 14 figures, [illegible] literature references ([illegible] English)

ASSOCIATION: Vsesoyuznyy [illegible]

(All-Union Thermo-[illegible] Institute)

1. Steam power plants--Control systems 2. [illegible]--Applications
3. Water--Control systems 4. Fuels--Consumption

Card 10/10

APPROVED FOR RELEASE: Wednesday, June 21, 2000 CIA-RDP86-00513R001134

"APPROVED FOR RELEASE: Wednesday, June 21, 2000 CIA-RDP86-00513R00113

MIRONOV, V. D., Doc of Tech Sci -- (diss) " Automation of the Heating Process with Direct Control of its Quality," Moscow, 1959, 21 pp (Moscow Order of Lenin Power Institute) (KL 4-60, 117)

APPROVED FOR RELEASE: Wednesday, June 21, 2000 CIA-RDP86-00513R001134

"APPROVED FOR RELEASE: Wednesday, June 21, 2000 CIA-RDP86-00513R00113

SOV/96-59-7-1/6

AUTHORS: Boloban, P.Ye., Davydov, N.I. and Mironov, V.D., Candidates of Technical Sciences

TITLE: Tasks in the Automation of New Thermal Power Stations (Zadachi avtomatizatsii novykh teplovykh elektrostantsiy)

PERIODICAL: Teploenergetika, 1959, Nr 7, pp 3-5 (USSR)

ABSTRACT: The ideal features of automatic control schemes for power systems are stated in general terms. The present position in the automatic control of power generation is briefly reviewed, noting current development trends. Success is now being achieved in the automatic control of once-through boilers, and automatic control is beginning to be used in water preparation. Qualified staff experienced in the adjustment of automatic control equipment are available. However, there are a number of important defects and omissions. Attention has been largely concentrated on automatic control of sets during normal operation, very little has been done on automatic starting and stopping of sets and automatic protection

Card 1/3

APPROVED FOR RELEASE: Wednesday, June 21, 2000 CIA-RDP86-00513R001134

"APPROVED FOR RELEASE: Wednesday, June 21, 2000 CIA-RDP86-00513R00113

SOV/96-59-7-1/6

Tasks in the Automation of New Thermal Power Stations

under fault conditions is inadequate. Little attention has been paid to mechanisation and automation of the laborious work of fuel handling. One of the main hindrances to the rapid development of automation in power engineering is the problem is not considered as a whole. The [illegible] turbine alternator set should be considered as an entity but in fact has to be treated as a number of separate parts because the equipment is manufactured [illegible] considerable number of factories without effective [illegible]. Automatic equipment is allotted a secondary role and is adapted to the set after the main design is settled. Moreover in many departments particularly fuel handling and water treatment, the degree of mechanisation is not sufficient to permit of automation. The ranges of control of different components [illegible] and do not meet the technical

Card 2/3

APPROVED FOR RELEASE: Wednesday, June 21, 2000 CIA-RDP86-00513R001134

"APPROVED FOR RELEASE: Wednesday, June 21, 2000 CIA-RDP86-00513R00113

SOV/96-59-7-1/16

Tasks in the Automation of New Thermal Power Stations

requirements, for example, for operation at no-load. Real progress will only be made if the requirements of complete automation are given prominence. This will necessarily influence the design of the main and auxiliary equipment. It must not be assumed that new large sets will operate only on base load, because in the future such sets will have to cover the main load of the power systems. Most control equipment is electronic and although this type of equipment has numerous advantages some instruments are unreliable, particularly polarised relays, magnetic starters and differential manometers. In designing automatic equipment it is desirable to separate the supervisory and the control functions of the instruments. Their construction can then be simplified. There is need for a greater variety of control equipment. However, the main hindrance to further advance is the absence of organised work on the integrated problem as a whole.

ASSOCIATION Vsesoyuznyy teplotekhnicheskiy institut (All Union Thermo-Technical Institute)

Card 3/3

APPROVED FOR RELEASE: Wednesday, June 21, 2000 CIA-RDP86-00513R001134

"APPROVED FOR RELEASE: Wednesday, June 21, 2000 CIA-RDP86-00513R001134

PHASE I BOOK EXPLOITATION SOV/4671

Akademiya nauk SSSR. Institut avtomatiki i telemekhaniki. Seminar po pnevmogidravlicheskoy avtomatike. 2d and 3d session

Voprosy pnevmo- i gidro- avtomatiki (Problems in Pneumatic and Hydraulic Automation Moscow, 1960. 211 p. Errata slip inserted. 4,500 copies printed.

Resp. Ed. M.A. Ayzerman, Doctor of Technical Sciences, Professor; Ed. of Publishing House. A.A. Tal'; Tech. Ed.: S.G. Tikhomirova.

PURPOSE: This collection of articles is intended for scientific workers, industrial designers and engineers interested in automation and telemechanics.

COVERAGE: The collection of 23 articles is a continuation of an earlier work of the Academy of Sciences USSR, on pneumatic and hydraulic automation systems, published in 1959. A wide range of problems connected with the design and operation of pneumatic and hydraulic automation equipment is described. An addition to problems based on experiments, the collection also contains discussions of new trends in the field, such as the possibility of using very low pressure for the operation of pneumatic devices. Some articles of this collection were written in the German Democratic Republic and in Czechoslovakia and reflect a somewhat different approach to automation problems. No personalities are mentioned. References accompany most of the articles.

PNEUMATIC AND HYDRAULIC DEVICES AND SYSTEMS OF AUTOMATIC REGULATION


Feygel'son, L.L. Pneumatic Compensating Pressure and Rarefication Transmitters and the Transmission of Pressure 57

Auzan, R.A., and L.O. Khvilevitskiy. Dynamic Characteristics of AUS (Agregatnaya unifitsirovannaya sistema. Unifying Assembly Systems) Regulators and Recommendations for Their Tuning 68

Volgin, V.V. Direct and Reverse Lead in Automatic Regulation Systems Composed of AUS Pneumatic Instruments 79

Dvoretskiy, V.M. Small Scale Hydraulic Lead Block of Compensation Type 88

Tomayy, V.P. Method of Increasing the Application of Industrial Hydraulic Instruments 93

Mironov, V.D. EGR-1 Electronic and Hydraulic Regulator 105

Beyrakh, E.Ya. MTTA (Moskovskiy zavod teplovoy avtomatiki - Moscow Heat Automation Plant) Electronic and Pneumatic Regulator 111

Nikitin, V.A. AUS Unified Pneumatic Assembly System - Base of a Complex Automation in the Petroleum Refining Industry 125


PNEUMATIC COMPUTING-SOLVING AND SCANNING DEVICES


Ivlichev, Yu.I., and N.N. Bedzhafov. Construction Problems of Pneumatic Computing Solving Devices 132

Lenin, S.D. Small Scale Pneumatic Continuous Action Calculating Machine and the Delay Block 138

Zalmanzon, L.A., and A.I. Semikova. Investigation of Characteristics of Pneumatic Chambers Used as Summators 146

Perenda, T.K., and A.A. Tal'. Pneumatic Throttleless Relay Diagrams 154

Tagayevskaya, A.A. Device for the Application of Pneumatic External Regulator on Items With Several Regulating Components 158

Anders, V.R., T.K. Berends, and N.L. Kharas. KhPR-1P Regulating Chromatograph With a Pneumatic Outlet 162

Dubkin, V.I., M.L. Kurskaya and Yu.I. Ostrovskiy. Application of an External Regulator for Controlling and Regulating Certain Chemical Processes According to the Thermal Effect of the Reaction


PNEUMATIC AND HYDRAULIC AUTOMATION DEVICES
IN
THE GERMAN DEMOCRATIC REPUBLIC AND CZECHOSLOVAKIA


Britall, V. (GDR). Hydraulic and Combined Automatic Regulation Systems 175

Ferner, V. (GDR). Components of Automatic Regulators 180

Hempl, T. (Czechoslovakia). Hydraulic Regulators of the Křižík Plant 205


AVAILABLE: Library of Congress (TJ840.S42)

Card 1/5

AC/dwm/gmp
1-18-61

APPROVED FOR RELEASE: Wednesday, June 21, 2000 CIA-RDP86-00513R001134

"APPROVED FOR RELEASE: Wednesday, June 21, 2000 CIA-RDP86-00513R00113

KORYTINA, S.F.; MIRONOV, V.D.

Miniature a.c. autocompensator. Priborostroenie no.7:26-28 Jl '60. (MIRA 13:7)

(Electronic instruments)

APPROVED FOR RELEASE: Wednesday, June 21, 2000 CIA-RDP86-00513R001134

"APPROVED FOR RELEASE: Wednesday, June 21, 2000 CIA-RDP86-00513R00113

MIRONOV, V.D., kand.tekhn.nauk

New electronic automatic regulators. Teploenergetika 7 no.6 20-27 Je '60. (MIRA 13:8)

1. Vsesoyuznyy teplotekhnicheskiy institut.
(Electronic control)
(Electric power plants)

APPROVED FOR RELEASE: Wednesday, June 21, 2000 CIA-RDP86-00513R001134

"APPROVED FOR RELEASE: Wednesday, June 21, 2000 CIA-RDP86-00513R00113

S/103/60/02[illegible]/06/02[illegible]/XX
B019/B063

AUTHOR: Mironov, V. D. (Moscow)

TITLE: Design of an Automatic Control Device for Boiler Units

PERIODICAL: Avtomatika i telemekhanika, 1960, Vol. 21, No. 6, pp. 833-[illegible]

TEXT: The introduction to the present paper gives a brief historical survey of the development of control devices for boiler units in the Soviet Union. In this connection, products of the factory "Teploavtomat", the Tsentral'nyy kotlo-turbinnyy institut (Central Institute for Steam Turbines), the Vsesoyuznyy elektrotekhnicheskiy institut (All-Union Electrotechnical Institute), and the Vsesoyuznyy teplotekhnicheskiy institut (All-Union Heat Engineering Institute) are mentioned. In all the control installations designed by these establishments automation and control act in parallel. These control systems are called "apparatus type", whereas those in which automatic controllers and control instruments are connected in series are called "instruments systems". The first type is more dependable than the second. The advantages of electric control

Card 1/3

APPROVED FOR RELEASE: Wednesday, June 21, 2000 CIA-RDP86-00513R001134

"APPROVED FOR RELEASE: Wednesday, June 21, 2000 CIA-RDP86-00513R00113

Design of an Automatic Control Device for Boiler Units

S/103/60/021/006/023/027 XX
B019/B063

over hydraulic and mechanical control are mentioned, and three control schemes are described (Fig 1. 1) denotes a pickup, 2) an amplifier, 3) a final control element, 4) a feedback element, 5) a remote control element, 6) a control member, and 7) an additional amplifier The scheme 1B guarantees a maximum of reliability in operation It uses a trigger amplifier Additional amplifiers are not required, and the final control element need not be loaded with a feedback circuit. On the basis of these three fundamental types, the All Union Heat Engineering Institute has developed a number of electronic control systems The block diagram of the main type of these controllers is shown in Fig 2 It consists of 1, 2, 3) pickups, 4) reference input elements, 5) measuring device 6) amplifier, 7) feedback device, 8) automatic switch, 9) key of remote control, 10) magnetic starter, 11) final control element, and 12) indicating instrument Furthermore, two electronic controllers for regulating the air-to-steam ratio, the heat-to-air ratio, etc are discussed Finally, the further development of such systems is dealt with. There are 4 figures.

Card 2/3

APPROVED FOR RELEASE: Wednesday, June 21, 2000 CIA-RDP86-00513R001134

"APPROVED FOR RELEASE: Wednesday, June 21, 2000 CIA-RDP86-00513R00113

Design of an Automatic Control Devi
for Boiler Units

S/103/60/021/
019/B063

Рис. 1. Структурные схемы регуляторов. *а* — контур обратной связи охватывает усилитель и астатический исполнительный механизм, *б* — контур обратной связи охватывает только усилитель, астатический исполнительный механизм преобразуется в статический с использованием дополнительного усилителя, *в* — контур обратной связи охватывает усилитель с релейной характеристикой, исполнительный механизм — астатический, с постоянной скоростью. *1* — датчик, *2* — усилитель, *3* — исполнительный механизм, *4* — устройство обратной связи, *5* — орган дистанционного управления, *6* — регулирующий орган, *7* — дополнительный усилитель

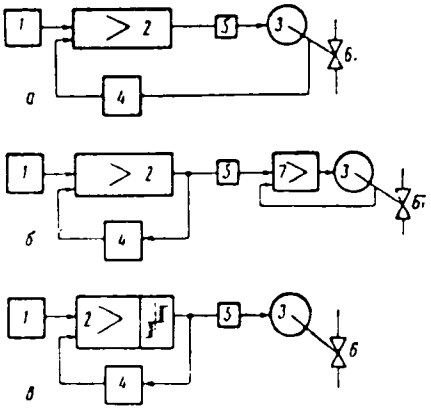


Card 3/3

APPROVED FOR RELEASE: Wednesday, June 21, 2000 CIA-RDP86-00513R001134

"APPROVED FOR RELEASE: Wednesday, June 21, 2000 CIA-RDP86-00513R00113

S/194/61/000/008/035/092
D201/D304

AUTHOR: Mironov, V.D.

TITLE: Electronic-hydraulic regulator ЭГР-1 (EGR-1)

PERIODICAL: Referativnyy zhurnal. Avtomatika i radioelektronika, no. 8, 1961, 38, abstract 8 V296 (V sb. Vopr. pnevmo- i gidroavtomatiki, M., AN SSSR, 1960, 105-110)

TEXT: The main elements of the regulator are pickups, the regulator proper, input, electro-mechanical transducer and a hydraulic follow-up system. The pick-ups are standard original instruments as used in existing electronic regulators. The law of the regulating input is determined by RC-networks and resistors in the feedback path of the input amplifier. The output voltage of the amplifier is converted into the angle of rotation of the shaft of the electro-mechanical follow-up system (by a transducer) which consists of an electrodynamic arrangement - a restoring winding in the field of a permanent magnet, a similar arrangement in the feed-

Card 1/3

APPROVED FOR RELEASE: Wednesday, June 21, 2000 CIA-RDP86-00513R001134

"APPROVED FOR RELEASE: Wednesday, June 21, 2000 CIA-RDP86-00513R00113

Electronic-hydraulic regulator... S/194/61/000/008/035/092
D201/D304

back path, and a valve amplifier of the error signal. The rotating shutter of the hydraulic power amplifier is fixed at the transducer shaft. The rotation of the shutter changes the cross-section of the control nozzle and the corresponding pressure differential at the differential piston of hydro-amplifier. The piston moves in conjunction with the sleeve and valve of the hydraulic drive. The drive piston has the feed-back needle which, being displaced with respect to the hub, varies the cross-section of the feedback throttle. The pressure drop at the piston of the hydro-amplifier becomes zero, the hub assuming a neutral position and the drive piston stopping in a position at which the cross-section of the control nozzle and of the feedback throttle are equal to each other. The displacement of the hydraulic drive piston corresponds to the angle of rotation of the shaft of the electro-mechanical follow-up system, i.e. to the output signal of the regulator. Basic characteristics of the regulator are as follows: Range of adjustments of the time constant of the isodrome 1-1500 sec., the range change of the coefficient of internal disproportion 0.02 - 5 mV/%, input re-

Card 2/3

APPROVED FOR RELEASE: Wednesday, June 21, 2000 CIA-RDP86-00513R001134

"APPROVED FOR RELEASE: Wednesday, June 21, 2000 CIA-RDP86-00513R00113

Electronic-hydraulic regulator

S/194/61/000/008/035/092
D201/D304

sistance of the control instrument 1000 ohm, supply water pressure 2.5 - 12 atm., water consumption 500 l/hr, the sluggishness of the follow-up system 2%, the overall time of piston movement 10 sec. 4 figures 2 references [Abstracter's note: Complete translation]

Card 3/3

APPROVED FOR RELEASE: Wednesday, June 21, 2000 CIA-RDP86-00513R001134

"APPROVED FOR RELEASE: Wednesday, June 21, 2000 CIA-RDP86-00513R00113

MIRONOV, V.D.

Development of automatic regulators designed by the All-Union Heat-Engineering Institute. Priborostroenie no.9:25-27 S '63. (MIRA 16:9)

(Electric controllers)

APPROVED FOR RELEASE: Wednesday, June 21, 2000 CIA-RDP86-00513R001134

"APPROVED FOR RELEASE: Wednesday, June 21, 2000 CIA-RDP86-00513R00113

ACCESSION NR: AP4041337 S/0119/64/000/006/0011/0014

AUTHOR: Mironov, V. D.; Svecharnik, D. V.

TITLE: Electronic system of supervision and control instruments

SOURCE: Priborostroyeniye, no. 6, 1964, 11-14

TOPIC TAGS: industrial automation, automatic control, EAUS instrument, supervisory control, electronic automatic control instrument

ABSTRACT: The electronic unit standardized system (EAUS - Soviet abbreviation) includes sensors, transducers, controllers, actuators, indicators, recorders, final amplifiers, and signaling devices intended for industrial-process supervision and automatic control. The instruments are designed for a standardized d-c signal 0(0.5)-5 ma. Two structural diagrams of EAUS application are shown in Enclosure 1. Controlling instruments are manufactured in two types: a relay controller with a variable-duration constant-height output signal and an analog

Card 1/3

APPROVED FOR RELEASE: Wednesday, June 21, 2000 CIA-RDP86-00513R001134

"APPROVED FOR RELEASE: Wednesday, June 21, 2000 CIA-RDP86-00513R00113

ACCESSION NR: AP4041337

controller with a variable output signal (operating characteristics of the controllers are tabulated). Special "correcting devices" are provided for converting signals from various sensors into the standard d-c signal. Also, these additional electronic devices are designed: a differentiator, a synchronizer, a limiter, a copying power amplifier, a manually-controlled initiating element, and a dynamic coupling. The system permits an easy matched connection with AUS pneumatic devices. A few applications of the EAUS system are indicated. Orig. art. has: 5 figures and 1 table.

ASSOCIATION: Nauchno-issledovatel'skiy institut teploenergeticheskikh priborov (Scientific Research Institute of Heat-Power Instruments)

SUBMITTED: 00 ENCL: 01

SUB CODE: IE NO REF SOV: 000 OTHER: 000

Card 2/3

APPROVED FOR RELEASE: Wednesday, June 21, 2000 CIA-RDP86-00513R001134

"APPROVED FOR RELEASE: Wednesday, June 21, 2000 CIA-RDP86-00513R00113

ACCESSION NR: AP4041337

ENCLOSURE: 01

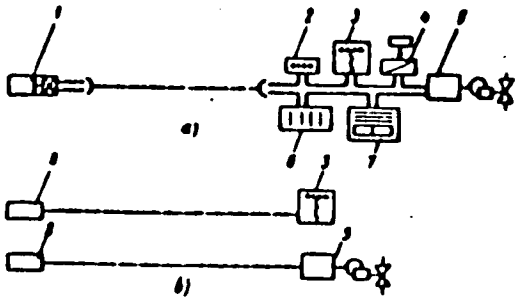


Structural diagrams of EAUS

(a) One info source feeds all secondary devices;
(b) Two sources of information.

1 - Standardized-signal sensor; 2 - secondary indicating instrument; 3 - secondary recorder; 4 - secondary signaling device; 5 - controller; 6 - centralized supervision apparatus; 7 - electron controller; 8 - sensors. (In the "b" case, the standardized signal is not always desirable as it may complicate the system and impair its reliability)

Card 3/3

APPROVED FOR RELEASE: Wednesday, June 21, 2000 CIA-RDP86-00513R001134

"APPROVED FOR RELEASE: Wednesday, June 21, 2000 CIA-RDP86-00513R00113

MIRONOV, V.D., dokt. tekhn. nauk

Automatic control systems of large power generating blocks [illegible]
35 no.9:1[illegible] S '64.
[illegible]

APPROVED FOR RELEASE: Wednesday, June 21, 2000 CIA-RDP86-00513R001134

"APPROVED FOR RELEASE: Wednesday, June 21, 2000 CIA-RDP86-00513R00113

MIRONOV, V.D., doktor tekhn. nauk

Problems of automation. Teploenergetika 10 no.12:7-10 D '63.
(MIRA 17:8)

1. Vsesoyuznyy teplotekhnicheskiy institut.

APPROVED FOR RELEASE: Wednesday, June 21, 2000 CIA-RDP86-00513R001134

"APPROVED FOR RELEASE: Wednesday, June 21, 2000 CIA-RDP86-00513R00113

APPROVED FOR RELEASE: Wednesday, June 21, 2000 CIA-RDP86-00513R001134

"APPROVED FOR RELEASE: Wednesday, June 21, 2000 CIA-RDP86-00513R00113

CA MIRONOV, V. F.

10

**Organomagnesium syntheses of silicohydrocarbons through secondary haloalkylsilanes.** A. D. Petrov and V. F. Mironov. *Doklady Akad. Nauk S.S.S.R.* 79, 707-10 (1950). While under normal Grignard conditions of reaction the secondary halides lead to much β-elimination and cleavage of C–Si bond with olefin formation, the Yavorskii technique (*C.A.* 3, 1019) and the presence of a double bond in the org. radical lead to satisfactory results. Addn. of a 1:1.3 mixt. of $Et_3SiCl$ and $CH_3CHCH_2Cl$ (I) to Mg gave a little ($MeCH:CH)_2$ and a trace of organo-Si deriv. if molar amts. with respect to Mg were used. Increase of the proportion of I to 4 moles gave 66% yields. Thus addn. to 40 g. Mg in 3.5 l. $Et_2O$ of 200 g. I and 100 g. $Et_3SiCl$ and refluxing 1 hr., distn. of $Et_2O$, heating the residue [illegible] hr. to 100°, and treatment with acidified $H_2O$ gave 98% [illegible] $Et_3SiCH_2CH:CH_2$, bₚ 170.2°, $d_4^{20}$ 0.7873, $n_D^{20}$ 1.414. Passage of dry HBr into the product gave $Et_3SiCH$-CHMeBr, yellowish liquid, which loses propene at room temp. and $n_D^{20}$ drops rapidly from 1.4[illegible] to 1.4[illegible]. The bromide (18 g.) mixed with 81 g. I at [illegible]° and added rapidly to a Mg in 300 ml. $Et_2O$ preliminarily activated with a little I gave after 3 hrs. reflux 1.5 g. $Et_3SiCH:CHMeCH:CH_2$, bₚ 218-20°, $n_D^{20}$ 1.4515, $d_4^{20}$ 0.8[illegible]. Substitution of PhBr for I gave 23% $Et_3SiCH:CHMeCH:CH_2$, bₚ 271-6°, $n_D^{20}$ 1.4987, $d_4^{20}$ 0.8886, while EtBr gave in low yield $Et_3SiCH:CHMeEt$, bₚ 152.4°, $n_D^{20}$ 1.4282, and a little [illegible] with volume bₚ 202.4°, $n_D^{20}$ 1.4[illegible], $d_4^{20}$ 0.7[illegible]. G. M. Kosolapoff

1951

APPROVED FOR RELEASE: Wednesday, June 21, 2000 CIA-RDP86-00513R001134

"APPROVED FOR RELEASE: Wednesday, June 21, 2000 CIA-RDP86-00513R00113

MIRONOV, V.F.

Sintez, kremniy

**Synthesis of silicohydrocarbons from tertiary, secondary, and primary β-halosilanes.** A. D. Petrov and V. F. Mironov. *Doklady Akad. Nauk S.S.S.R.* 80, 761-4(1951); *C.A.* 45, 7081h.—Usually, increased ionization of the C–X link in β-halosilanes, as one proceeds from primary halides to secondary ones, facilitates the formation of silanes in reactions with Grignard reagents. Addn. of 2 moles $CH_2:CHCH_2Br$ and 1 mole $Et_2SiCl_2$ to Mg in $Et_2O$ over 10 hrs. gave 70% triethylallylsilane. Similarly were obtained: 61% *methylbis(allyl)silane*, $b_{760}$ 180.5°, $n_D^{20}$ 1.4602, $d_4^{20}$ 0.8055; 65% *methylbis(allyl)silane*, $b_{760}$ 122.5°, $n_D^{20}$ 1.4430, $d_4^{20}$ 0.7630; 20% *dimethylallylsilane*, $b_{760}$ 136.8°, $n_D^{20}$ 1.4420, $d_4^{20}$ 0.7679. $Et_3SiCH_2CMe$, $b_{760}$ 196.0°, is obtained in 80% yield from $Et_3Si$ and $MeMgCl$, with $Et_2O$ catalyst; the product is converted readily to $Et_3SiCH:CH_2$ according to Ushakov and Itenberg (C.A. 32, 3868[9]), best in an autoclave. Addn. of 91 g. $Me_2C:CHCl$ and 75 g. $Et_2SiCl_2$ to 49 g. Mg in 4 l. $Et_2O$ over 6 hrs., followed by refluxing 2 hrs., slow concn. and heating the residue 10 hrs. at 100° gave 70.5% $Et_2Si(CH_2CMe:CH_2)_2$, $b_{760}$ 188.5°, $n_D^{20}$ 1.4505, $d_4^{20}$ 0.7904. The prepn. from $EtMgBr$ and $Cl_2Si(CH_2CMe:CH_2)_2$ is less satisfactory, the intermediate $b_{760}$ 140.1°, $n_D^{20}$ 1.4616, $d_4^{20}$ 1.1784. Treatment of the above unsatd. silanes with HX at −70° gave the resp. β-halo analogs, which are too unstable to be purified and which were therefore used immediately. The Cl or the Br derivs. prepd. from $Et_2Si(CH_2CH:CH_2)_2$ (by addn. of HX), treated with $CH_2:CHCH_2MgX$, gave $Et_2Si(CH_2CHMeCH_2CH:CH_2)_2$, $b_{760}$ 230.1°, $n_D^{20}$ 1.4600, $d_4^{20}$ 0.8042. $Et_2SiCH_2CHBrMe$ and $PrMgCl$ at −70° gave 30% $Et_2SiCH_2CHMePr$, $b_{760}$ 222.4°, $n_D^{20}$ 1.4443, $d_4^{20}$ 0.7851. $Et_2SiCH_2CMeClMe$ and $CH_2:CHCH_2Cl$ added simultaneously to Mg in $Et_2O$ at −70° gave 22% $Et_2Si(CH_2CMe(CH_2CH:CH_2)_2$, $b_{760}$ 235.6°, $n_D^{20}$ 1.4560, $d_4^{20}$ 0.8508. $EtMgBr$ gave 20% $Et_2SiCH_2CMeEt$, $b_{760}$ 211.15°, $n_D^{20}$ 1.4466, $d_4^{20}$ 0.8057. $Et_2SiCH_2CH_2Br$ and $CH_2:CHCH_2Br$ similarly gave a small amt. of $Et_2SiCH:CH_2$ and 24% $Et_2Si(CH_2CH_2CH_2CH:CH_2)_2$, $b_{760}$ 238-7°, $n_D^{20}$ 1.4600, $d_4^{20}$ 0.7971; $EtMgBr$ in the above reaction gave a trace of $Et_2SiEt_2$, b. 189.01°, and 53% $Et_2Si(CH_2CHMe)_2$. $Me_2Si(CH_2CHBrMe)_2$ and $CH_2:CHCH_2Br$ added to Mg in $Et_2O$ gave 10% $CH_2:CHCH_2Si(Me)(CH_2CHMeCH_2CH:CH_2)_2$, $b_{760}$ 260.1.5°, $n_D^{20}$ 1.4500, $d_4^{20}$ 0.8021. $CH_2:CHCH_2MgBr$ and $(CH_2:CHCH_2)_2SiMe$ gave 7.8% $CH_2:CHCH_2Si(Me)(CH_2CHMeCH_2CH:CH_2)_2$, $b_{760}$ 181.4°, $n_D^{20}$ 1.4482, $d_4^{20}$ 0.7981, and a low yield of $MeSi(CH_2CHMeCH_2CH:CH_2)_3$, $b_{760}$ 289.5°, $n_D^{20}$ 1.4500, $d_4^{20}$ 0.8150. G. M. Kosolapoff

APPROVED FOR RELEASE: Wednesday, June 21, 2000 CIA-RDP86-00513R001134

"APPROVED FOR RELEASE: Wednesday, June 21, 2000 CIA-RDP86-00513R00113

MIRONOV, V. F.

MIRONOV, V. F. - "Synthesis of Silicon Hydrocarbons From Beta-Halogen Silane." Sub 19 Nov 52, Moscow Order of Lenin Chemicotechnological Inst imeni D. I. Mendeleyev. (Dissertation for the Degree of Candidate in Chemical Sciences).

SO: Vechernaya Moskva January-December 1952

APPROVED FOR RELEASE: Wednesday, June 21, 2000 CIA-RDP86-00513R001134

"APPROVED FOR RELEASE: Wednesday, June 21, 2000 CIA-RDP86-00513R00113

MIRONOV, V.F.

Chemical Abst.
Vol. 48 No. 9
May 10, 1954
Organic Chemistry

The mechanism of reaction of alkylmagnesium halides with silicon halides. A. D. Petrov and V. F. Mironov. Bull. Acad. Sci. U.S.S.R., Div. Chem. Sci. 1952, 891-9 (Engl. translation).—See C.A. 47, 1047i. H. L. H.

APPROVED FOR RELEASE: Wednesday, June 21, 2000 CIA-RDP86-00513R001134

"APPROVED FOR RELEASE: Wednesday, June 21, 2000 CIA-RDP86-00513R00113

MIRONOV, V. F.

Chemical Abst.
Vol. 48 No. 8
Apr. 25, 1954
Organic Chemistry

(4)

**The mechanism of reaction of alkylmagnesium halides with β-silicohalides.** A. D. Petrov and V. F. Mironov (D. I. Mendeleev Chem. Technol. Inst., Moscow). Izvest. Akad. Nauk S.S.S.R., Otdel. Khim. Nauk 1952, 935-45. Correction to abstract in C.A. 47, 10471. The sentence beginning in line 12, column 10472 should read: In this way 5-25% yields of the following tetraalkylsilanes were obtained (b.p., $n_D^{20}$, and $d_{20}$ given): $PhMe_2SiCH_2CHMeEt$, $b_{10}$ 242°, 1.4895, 0.8806; $PhMe_2SiCH_2CHMeCH_2CH_2CH_3$, $b_{10}$ 256-8°, 1.4990, 0.8859; $Me_3SiCH_2CHMeEt$, $b_{760}$ 143.2°, 1.4120, 0.7369; $Me_3SiCH_2CHMePr$, $b_{760}$ 154.5°, 1.4190, 0.7492; $Me_3SiCH_2CHMePh$, $b_{10}$ 221-3°, 1.4940, 0.8702; $Me_3SiCH_2CHMeCH_2CH_2CH_3$, $b_{760}$ 151.3°, 1.4264, 0.7575; $Pr_3SiCH_2CHMeEt$, $b_{10}$ 240.3°, 1.4450, 0.7965; $Pr_3SiCH_2CHMeCH_2CH_2CH_3$ (I), $b_{10}$ 255.6°, 1.4545, 0.8008; $Pr_3SiCH_2CHMePr$ (II), $b_{10}$ 257.9°, 1.4470, 0.8011; $Bu_3SiCH_2CHMeEt$, $b_{10}$ 272.4°, 1.4480, 0.8010; $Bu_3SiCH_2CHMeCH_2CH_2CH_3$ (III), $b_{10}$ 289.9°, 1.4568, 0.8122.

C. C. Langham

11-11-54

APPROVED FOR RELEASE: Wednesday, June 21, 2000 CIA-RDP86-00513R001134

"APPROVED FOR RELEASE: Wednesday, June 21, 2000 CIA-RDP86-00513R00113

MIRONOV, V. F.

USSR/Chemistry - Silicon-Organic Compounds Apr 53

"Synthesis and Properties of Silicon Hydrocarbons," A.D. Petrov and V.F. Mironov (Moscow)

Usp Khim, Vol 22, No 4, pp 377-409

Authors discuss the synthesis of silicon hydrocarbons from halogenosilanes with the halogen at the silicon atom, the synthesis of aryl silanes and the role of spatial hinderances in the synthesis of aryl- and alkyl-substituted silanes, and the synthesis of silanes through a, β, γ, and δ halogenosilanes. The authors then discuss the synthesis

256T32

and properties of unsatd silicohydrocarbons. The bibliography, consisting of 154 references, is taken largely from western sources (43 are Russian, balance foreign)

(CA 47 no.19: 9911 '53)

APPROVED FOR RELEASE: Wednesday, June 21, 2000 CIA-RDP86-00513R001134

"APPROVED FOR RELEASE: Wednesday, June 21, 2000 CIA-RDP86-00513R00113

MIRONOV, V. F.

Optical method of studying silicon organic compounds. The additivity of the intensities of the characteristic frequencies in the Raman spectra of allylsilanes. P. A. Bazhulin, Yu. P. Egorov, and V. F. Mironov. Doklady Akad. Nauk S.S.S.R. 92, 515-17(1953)(Engl. translation issued as U.S. Atomic Energy Comm. NSF-tr-197, 3 pp.(1954)).—Integrated intensities and widths of Raman bands of the substituted silanes $X_{4-n}SiY_n$, where $X$ is Me and $Y$ is $CH_2{=}CHCH_2$, are reported. Characteristic frequencies are identified for the $CH_2{=}CHCH_2$ group, and their intensities are shown to be additive within the exptl. error (± 15%). Several bands broaden and others become narrow as $n$ is successively 1, 2, 3, and 4. With increase of symmetry the frequency of the totally symmetrical SiC stretching vibration decreases from 550 to 525 cm.$^{-1}$; the band broadens, while the integrated intensity remains const.

H. J. Bernstein

MF
11-10-54

APPROVED FOR RELEASE: Wednesday, June 21, 2000 CIA-RDP86-00513R001134

"APPROVED FOR RELEASE: Wednesday, June 21, 2000 CIA-RDP86-00513R00113

B. T. R.
Vol. 3 No. 4
Apr. 1954
Chemistry-Organic

(3) Chem

4596* Interaction of Unsaturated Silicon Hydrocarbons With Dialkyldithiophosphoric Acids. (Russian) A. D. Petrov, V. F. Mironov, and V. G. Glukhovtsev. *Doklady Akademii Nauk SSSR*, v. 93, no 3, Nov 21, 1953, p 499-501

Investigation of union with vinyl- and allyl silanes was made. Table 8 ref

Inst. Org. Chem. im. Zelinskiy, AS USSR

APPROVED FOR RELEASE: Wednesday, June 21, 2000 CIA-RDP86-00513R001134

"APPROVED FOR RELEASE: Wednesday, June 21, 2000 CIA-RDP86-00513R00113

MIRONOV, V. F.

USSR/Chemistry Synthesis

Card : 1/1

Authors : Ponomarenko, V. A., and Mironov, V. F.

Title : Synthesis of certain alkenyl- and alkyl silanes and their derivatives

Periodical : Izv. AN SSSR, Otd. Khim. Nauk., 3., 497 - 503, May - June 1954

Abstract : Experimental data are presented on the synthesis of alkenyl- and alkyl silanes and their derivatives (alkenylhalogen silanes, alkylethoxy-silanes, alkylhalide silanes). The ability of diallylsilane to rhodanize with a yield close to the calculated, and the ability of allyl silane to attract HCl, are explained. Data are also presented characterizing the relation between the solidification point of silanes and their structure and it was shown that the refraction magnitude of the Si-C bond is determined by the radical which includes the carbon bound with the silicon. Eighteen references: 12 USA and 6 USSR. Tables.

Institution : Acad. of Sc. USSR, The N. D. Zelinskiy Institute of Org. Chemistry

Submitted : July 17, 1953

APPROVED FOR RELEASE: Wednesday, June 21, 2000 CIA-RDP86-00513R001134

"APPROVED FOR RELEASE: Wednesday, June 21, 2000 CIA-RDP86-00513R00113

Mironov, V.F.

USSR/Chemistry - Synthesis

Card 1/1 Pub. 40 - 26/27

Authors : Petrov, A. D.; Mironov, V. F.; and Glukhovtsev, V. G.

Title : The synthesis of diallyl silanes

Periodical : Izv. AN SSSR. Otd. khim. nauk 6, 1123-1124, Nov-Dec 1954

Abstract : Data are presented regarding the synthesis of four new diallyl silanes including three with aryl radicals. The chemical characteristics of a hitherto unknown alpha-naphthylmethyldichlorosilane are described. Five references: 4 USSR and 1 USA (1949-1954). Table.

Institution : Acad. of Sc., USSR, The N. D. Zelinskiy Institute of Organ. Chemistry

Submitted : July 12, 1954

APPROVED FOR RELEASE: Wednesday, June 21, 2000 CIA-RDP86-00513R001134

"APPROVED FOR RELEASE: Wednesday, June 21, 2000 CIA-RDP86-00513R00113

MIRONOV, V.F.

USSR.

New method of synthesis of α-iodoalkyltrialkylsilanes. V. A. Ponomarenko and V. F. Mironov (N. D. Zelinskii Inst. Org. Chem., Acad. Sci. U.S.S.R., Moscow). *Doklady Akad. Nauk S.S.S.R.* 94, 435-8(1954).—The reaction of MeMgI with $Cl_3SiCH_2Cl$ yields $Me_3SiCH_2Cl$ and $Me_3SiCH_2I$, the latter apparently formed in exchange reaction of the chloro deriv. with MgICl. Reaction of $Et_3SiCHClMe$ with $MgI_2$ gave 70% $Et_3SiCHIMe$. Higher temp. and longer reaction time favor the formation of the iodo derivs. as might be expected. EtMgI yields more iodo deriv. than does MeMgI. No bromo derivs. are formed, however, when RMgBr is used. Thus a convenient method for prepn. of iodoalkyl silanes is obtained. Passage of $Cl_2$ into refluxing 300 g. $MeSiCl_3$ for 22 hrs. while the refluxing vapor was subjected to ultraviolet irradiation gave 53% $Cl_3SiCH_2Cl$, b. 117-8.5°. Similarly were obtained: 75% $MeSiCl_2CH_2Cl$, m. 120.5-1.5°, and $Me_2SiClCH_2Cl$ (77.2%), $b_{22}$ 113.8°. Heating 503 g. $Et_4Si$ with 472 g. $SO_2Cl_2$ and 1.5 g. $Bz_2O_2$ to 60-70° yielded a stream of $SO_2$ and HCl and after 2-3 hrs. the mixt. was distd. yielding 50% $Et_3SiCHMeCl$, $b_{10}$ 104.6°, $n_D^{20}$ 1.4535, along with unstated yield of a fraction, b. 233-3.5°, $d_{20}$ 0.9619, $n_D^{20}$ 1.4590, which slowly loses HCl in NaOH soln. To MeMgI, from 85 g. Mg, in 1.0 l. $Et_2O$ was slowly added 184 g. $Cl_3SiCH_2Cl$, the solvent was removed and the residue heated 9 hrs. on a steam bath, treated with $Et_2O$ and $H_2O$, and the org. layer distd. yielding 9 g. $Me_3SiCH_2Cl$, $b_{760}$ 97°, $n_D^{20}$ 1.4172, and 109.2 g. (52%) $Me_3SiCH_2I$, $b_{760}$ 139.5°, $n_D^{20}$ 1.4895. To MeMgI from 48.3 g. Mg was added 96 g. $Cl_3SiCH_2Cl$ and the mixt. refluxed 7 hrs. yielding 25% $Me_3SiCH_2I$ and 50% $Me_2SiCH_2Cl$; the yield of the latter is 69.5% after 3 hrs. refluxing in $Et_2O$. Heating the reaction mixt. of EtMgI (from 22 g. Mg) and 46 g. $Cl_3SiCH_2Cl$, after removal of $Et_2O$, on a steam bath 10 hrs. gave 37 g. $Et_3SiCH_2I$, b. 215-18°, $n_D^{20}$ 1.5086, $d_{20}$ 1.3418. A similar reaction (25

APPROVED FOR RELEASE: Wednesday, June 21, 2000 CIA-RDP86-00513R001134

"APPROVED FOR RELEASE: Wednesday, June 21, 2000 CIA-RDP86-00513R00113

hrs. heating) of EtMgBr and $Cl_2SiCH_2Cl$ gave 62.2% $Et_2SiCH_2Cl$, $b_{760}$ 179°, $n_D^{20}$ 1.4480, $d_{20}$ 0.9101. Heating similarly for 9 hrs. the reaction mixt. of EtMgI (from 19 g. Mg) and 51.8 g. $Cl_2SiMeCH_2Cl$ gave 81% $Et_2SiMeCH_2I$, $b_{760}$ 194.6°, $n_D^{20}$ 1.5005, $d_{20}$ 1.3090. Similarly (8 hrs. heating) EtMgI and $ClSiMe_2CH_2Cl$ gave 63% $EtMe_2SiCH_2I$, $b_{760}$ 169.5°, $n_D^{20}$ 1.4955, $d_{20}$ 1.2937. To $MgI_2$ prepd. in $Et_2O$ from 6 g. Mg and 63.5 g. $I_2$ was added 45 g. $Et_2SiCH$-MeCl, the solvent was removed, and the residue heated on a steam bath 10 hrs., yielding after the usual treatment 67% $Et_2SiCHMeI$, $b_8$ 97°, $b_6$ 86–8°, $b_{10}$ 235–7°, $n_D^{20}$ 1.5053, $d_{20}$ 1.2950.

O. M. Kosolapoff

APPROVED FOR RELEASE: Wednesday, June 21, 2000 CIA-RDP86-00513R001134

"APPROVED FOR RELEASE: Wednesday, June 21, 2000 CIA-RDP86-00513R00113

MIRONOV, V. F.

USSR/Chemistry - Chlorination - Alkylation

Card 1/1 : Pub. 22 - 30/46

Authors : Petrov, A. D., Mem. Corresp. of Acad. of Sc. USSR; Mironov, V. F; Ponomarenko, V. A; and Chernyshev, E. A.

Title : Chlorination of alkylsilane and disilane chlorides and alkylation of aromatic hydrocarbons by forming halides

Periodical : Dok. AN SSSR 97/4, 687-690, Aug 1, 1954

Abstract : The chlorination of $C_2H_5SiCl_3$, $Cl_3SiCH_2SiCl_3$ and $Cl_3SiCH_2CH_2SiCl_3$ and the process of alkylation of aromatic hydrocarbons by the halides formed during this process, are explained on the basis of literature data. It was established that $C_2H_5SiCl_3$ chlorinates into alpha- and beta-chloroethyl-trichlorosilanes and $Cl_3SiCH_2SiCl_3$, as well as $SO_2Cl_2$ chlorinate into dichloride. Twelve references: 8-USA; 3-USSR and 1-English (1946-1954). Tables.

Institution : ....

Submitted : April 31, 1954

APPROVED FOR RELEASE: Wednesday, June 21, 2000 CIA-RDP86-00513R001134

"APPROVED FOR RELEASE: Wednesday, June 21, 2000 CIA-RDP86-00513R00113

USSR/Chemistry - Polymerization

Card 1/1 Pub. 22 - 31/56

Authors : Petrov, A. D.; Korshak, V. V., Memb. Correspondents of Ac. of Sc. USSR.; Polyakova, A. M.; Sakharova, A. A.: Mironov, V. F.; and Nikishin, G. I.

Title : High-pressure polymerization of mono- and polyalkenylsilanes

Periodical : Dok. AN SSSR 99/5, 785-788, Dec 11, 1954

Abstract : Nineteen silico-olefines of different structure were subjected to polymerization by heating to 130° in the presence of tertiary butyl peroxide and 5500 atm pressure. The results show that under such rigid conditions the polymerizability of various alkenyl silanes and the nature of the polymers derived vary to a large extent. The reactivity of alkenyl silanes is determined by the structure of the latter and the orientation of the multiple bond relative to the Si-atom. The products, obtained through high-pressure polymerization of alkenyl silanes, are tabulated. Seven references: 5-USSR 1-USA and 1-English (1937-1953). Table; drawing

Institutution: Academy of Sciences USSR, Institute of Organic Chemistry and Institute of Elementary Organic Compounds

Submitted : June 29, 1954

APPROVED FOR RELEASE: Wednesday, June 21, 2000 CIA-RDP86-00513R001134

"APPROVED FOR RELEASE: Wednesday, June 21, 2000 CIA-RDP86-00513R00113

MIRONOV, V.F.

Petrov, A. D., and Mironov, V. F.: Darstellung und Eigenschaften von [redacted]asserstoffen. Translated from Russian by Fr. Hennig. Berlin: Akademie-[redacted] 1955. 48 pp. DM 5.60.

Translation of Title: Production and Properties of Silicon Coal Hydrogen. Translated from Russia

Chem

APPROVED FOR RELEASE: Wednesday, June 21, 2000 CIA-RDP86-00513R001134

"APPROVED FOR RELEASE: Wednesday, June 21, 2000 CIA-RDP86-00513R00113

MIRONOV, V. F.

CH

Cyanoethylation of organosilicon amines. V. F. Mironov, A. D. Petrov, and N. A. Pogonkina (N. D. Zelinskii Inst. Org. Chem., Acad. Sci. U.S.S.R., Moscow). *Izvest. Akad. Nauk S.S.S.R., Otdel. Khim. Nauk* 1955, 768-70; *Bull. Acad. Sci. U.S.S.R., Div. Chem. Sci.* 1955, 685-7(Engl. translation).—Heating 160 g. $EtNH_2$ and 150 g. $Me_3SiCH_2Cl$ in an autoclave 10 hrs. at 150° gave after treatment of the mixt. with 10% NaOH, 51% $EtNHCH_2SiMe_3$, $b_{760}$ 121.2°, $n_D^{20}$ 1.4155, $d_{20}$ 0.7594, and 15.4% $EtN(CH_2SiMe_3)_2$, $b_{760}$ 194.5°, $n_D^{20}$ 1.4349, $d_{20}$ 0.7914. $Et_2NH$ (91 g.) and 61.3 g. $Me_3SiCH_2Cl$ in 8 hrs. at 150° gave 72.5% $Et_2NCH_2SiMe_3$, $b_{760}$ 148.2°, $n_D^{20}$ 1.4232, $d_{20}$ 0.7693; only 19% yield was obtained by ordinary refluxing 31 hrs., and 53 hrs. longer reflux gave 32.4% total yield. $EtNH_2$ (23.2 g.) and 20 g. $(MeO)_3SiMeCH_2Cl$ in 4 hrs. at 150° gave 25.0% $EtNHCH_2SiMe(OMe)_2$, $b_{760}$ 156.5°, $n_D^{20}$ 1.4118, $d_{20}$ 0.9120. To 3.7 g. $CH_2:CHCN$ (I) was added 9.2 g. $EtNHCH_2SiMe_3$ and the mixt. kept 12 hrs. at 60° gave 77.4% $Me_3SiCH_2NEtCH_2CH_2CN$, $b_6$ 83.5°, $n_D^{20}$ 1.4466, $d_{20}$ 0.8612. I (10 g.), 3.2 g. AcOH, and 20.6 g. $PhNHCH_2SiMe_3$ in 24 hrs. at 130° gave 68.6% $Me_3SiCH_2NPhCH_2CH_2CN$, $b_6$ 199-201°, $n_D^{20}$ 1.5388, $d_{20}$ 1.9886. I (10 g.) and 19.3 g. $EtNHSiEt_3$ in 61 hrs. at 77-80° gave 13.6% $Et_3SiNEtCH_2CH_2CN$, $b_{760}$ 262-5°, $n_D^{20}$ 1.4575, $d_{20}$ 0.8914, while a 40% yield was obtained on treatment of 92.7 g. $EtNHCH_2CH_2CN$ with 65 g. $Et_3SiCl$ in dry $Et_2O$, and keeping overnight; the product $b_{760}$ 265-6°, $n_D^{20}$ 1.4500, $d_{20}$ 0.8[illegible]. To 3.2 g. $EtNHCH_2SiMe_3$ in $Et_2O$ was added 6 g. MeI; after 8 days the mixt. yielded 6 g. $(Me_3SiCH_2NEtMe)I$, m. 118°; in 8 days the yield reached 100%. Similarly were prepd. $Me_3SiCH_2NEt_2I$, m. 170°; $Me_3SiCH_2NEt(CH_2CH:CH_2)I$, m. 144-6°; $Me_3SiCH_2NMeEt(CH_2CH_2CN)I$, m. 190°; and $(Me_3SiCH_2)_2NEtMeI$, m. 140-2°. G. M. Kosolapoff

2

APPROVED FOR RELEASE: Wednesday, June 21, 2000 CIA-RDP86-00513R001134

"APPROVED FOR RELEASE: Wednesday, June 21, 2000 CIA-RDP86-00513R00113

[illegible]

[illegible] To 341 g. $EtSiCl_3$ in 66 g. pyridine and 500 ml. $C_6H_6$ was added in 3 hrs. with cooling 59 g. $Me_2COHCN$; after 24 hrs. the mixt. was filtered and distd. yielding a range of fractions which gave 65.6% $EtSiCl_2OCMe_2CN$, $b_7$ 78°, $n^{20}_D$ 1.4288, $d_{20}$ 1.1374, and 11.8% $EtSiCl(OCMe_2CN)_2$, $b_{11}$ 139–40°, 1.4320, 0.9735. Similarly were prepd.: 72.2% $MeSiH(OCMe_2CN)_2$, $b_{14}$ 108°, 1.4130, 0.9644; 60.3% $Et_2Si(OCMe_2CN)_2$, $b_{18}$ 141–2°, 1.4270, 0.9576; 81% $PhMeSi(OCMe_2CN)_2$, $b_4$ 153–4°, 1.4780, 1.0327; 77.5% $Me(ClCH_2)Si(OCMe_2CN)_2$, $b_7$ 114°, 1.4380, 1.0702; 40.8% $MeSi(CHCl_2)(OCMe_2CN)_2$, $b_7$ 189°, 1.4462, 1.1374; 82.2% $PhSiCl_2(OCMe_2CN)$, $b_7$ 116°, 1.4995, 1.1915; 55.8% $Si(OCMe_2CN)_4$, m. 92–4°. Cf. Frisch and Wolf, *C.A.* 48, 6057g.

G. M. Kosolapoff

APPROVED FOR RELEASE: Wednesday, June 21, 2000 CIA-RDP86-00513R001134

"APPROVED FOR RELEASE: Wednesday, June 21, 2000 CIA-RDP86-00513R00113

MIRONOV, V.F.

USSR/ Chemistry - Synthesis

Card 1/2 Feb. 40 - 25/27

Authors : Mironov, V. F., and Pogonkina, N. A.

Title : Synthesis of silico-hydrocarbons with the double bond in and E- position relative to the Si-atom

Periodical : Izv. AN SSSR. Otd. khim. nauk 1, 182-186, Jan-Feb 1955

Abstract : Data are presented on the order of addition of HBr to delta-alkenylsilane. The discovery of a new method for the synthesis of gamma-alkenyl silanes through dehydrobromination of delta-bromalkyltrialkylsilanes with alkali, is announced. The six new gamma-alkenylsilanes synthesized by the new method and by the reaction of Grignard reagents consisting of alpha-chloroalkyltrialkylsilanes with allyl bromide and methyl chloride are described.

Institution : Acad. of Sc., USSR, The N. D. Zelinskiy Inst. of Org. Chem.

Submitted : July 19, 1954

APPROVED FOR RELEASE: Wednesday, June 21, 2000 CIA-RDP86-00513R001134

"APPROVED FOR RELEASE: Wednesday, June 21, 2000 CIA-RDP86-00513R00113

Card 2/2 Pub. 40 - 25/27

Periodical : Izv. AN SSSR. Otd. khim. nauk 1, 182-186, Jan-Feb 1955

Abstract : The synthesis of the first alkenylsilane representative with the double bond in epsilon position relative to the Si atom is explained. Eleven references: 5 USA, 5 USSR and 1 English (1946-1954). Table

APPROVED FOR RELEASE: Wednesday, June 21, 2000 CIA-RDP86-00513R001134

"APPROVED FOR RELEASE: Wednesday, June 21, 2000 CIA-RDP86-00513R00113

MIRONOV, V.F.

USSR/ Chemistry - Synthesis methods

Card 1/1 Pub. 22 21/50

Authors : Petrov, A. D., Memb. Corresp., Acad. of Sc., USSR.; Mironov, V. F.; and Pogonkina, N. A.

Title : Synthesis of trialkylsilimethylrhodanides and beta - (trialkylsililalkoxy) propionitriles

Periodical : Dok. AN SSSR 100/1, 81-84, Jan 1, 1955

Abstract : It is shown for the first time that alpha-chloramethyltrialkylsilanes (which only recently became accessible compounds), react easily with ammonium thyocyanate resulting in the formation of homologous thiocyanates. The derivition of hitherto unknown Si-containing alcohols and their acetates is announced. Recent application of the cyanethylation reaction in organic chemistry of silicones is also reported. A new method for the synthesis of trialkylsililmethylrhodanides and beta-(trialkylsililalkoxy) propionitriles is described. Seven references: 4 USA and 3 USSR (1946-1954). Table.

Institution : Acad. of Sc. USSR., The N.D. Zelinskiy Institute of Organic Chemistry

Submitted : July 7, 1954

APPROVED FOR RELEASE: Wednesday, June 21, 2000 CIA-RDP86-00513R001134

"APPROVED FOR RELEASE: Wednesday, June 21, 2000 CIA-RDP86-00513R00113

MIRONOV, V.F.

USSR/ Chemistry - Isotopic exchange

Card 1/1 Pub. 22 - 26/49

Authors : Miller, V. B.; Neyman, M. B.; Savitskiy, A. V.; and Mironov, V. F.

Title : Study of the ion isotopic exchange of alpha-iodalkyltrialkylsilanes with iodine ions

Periodical : Dok. AN SSSR 101/3, 495-497, Mar 21, 1955

Abstract : The isotopic exchange of $(CH_3)_3SiCH_2J$, $(C_2H_5)_3SiCH_2J$ and $(C_2H_5)_3SiCHJCH_3$ with sodium iodide was investigated in a 90% $C_2H_5OH$ solution. The radioisotope $J^{131}$ with a life span of 8.0 days was employed in the role of the marked atom. The results obtained are shown in graphs. The rate of the ion exchange was determined by the energetic barrier which the carbon atom must penetrate when passing through the face of the tetrahedron the apexes of which are occupied by three substitutes. Ten references: 8 USSR and 2 USA (1935-1954). Tables; graphs.

Institution : Acad. of Sc., USSR, Inst. of Chem. Phys.

Presented by : Academician V. N. Kondratyev, October 23, 1954

APPROVED FOR RELEASE: Wednesday, June 21, 2000 CIA-RDP86-00513R001134

"APPROVED FOR RELEASE: Wednesday, June 21, 2000 CIA-RDP86-00513R00113

Mironov, V.F.

3

7

M. A. YOUTZ

2 copies

Synthesis and properties of 1,1- and 1,2-bis(trimethylsilyl)ethylenes and 2-chlorovinylmethylsilane. V. F. Mironov, V. G. Glukhovtsev, and A. D. Petrov (N. D. Zelinskii Inst. Org. Chem., Acad. Sci. U.S.S.R., Moscow). *Doklady Akad. Nauk S.S.S.R.* 104, 865-8(1955).—Chlorination of 343 g. $(CH_2SiCl_2)_2$ to a reflux temp. of 221° (26 hrs.) gave 230 g. $Cl_3SiCHClCH_2SiCl_3$, b. 224-5°, $n_D^{20}$ 1.4915, $d_{20}$ 1.5774. Similar chlorinations yielded: 88.5% (combined) $MeCl_2CSiCl_3$, b. 136.8°, $n_D^{20}$ 1.4646, and $Cl_2CH_2CHClSiCl_3$, b. 161°, $n_D^{20}$ 1.4850, $d_{20}$ 1.5156, from $MeCHClSiCl_3$; from $ClCH_2CH_2SiCl_3$ was formed 92.5% (combined) $ClCH_2CHClSiCl_3$ and $Cl_2CHCH_2SiCl_3$. Distn. of 167 g. $Cl_3SiCHClCH_2SiCl_3$ and 85 g. quinoline gave 74% $Cl_3SiCH{:}CHSiCl_3$, b. 190-1°, m. 30.1°; with $Et_3NHI$ gave 56% yield. Similar dehydrochlorinations gave: 61% (combined) $CH_2{:}CClSiCl_3$, $b_{760}$ 124°, $n_D^{20}$ 1.4648, $d_{20}$ 1.4243; and $ClCH{:}CHSiCl_3$, $b_{760}$ 133°, $n_D^{20}$ 1.4745, $d_{20}$ 1.4[illegible]4. The latter with MeMgI gave 62% $ClCH{:}CHSiMe_3$, $b_{760}$ 116.6°, $n_D^{20}$ 1.4380, $d_{20}$ 0.8921; similarly prepd. was 61% $CH_2{:}CClSiMe_3$, b. 104°. Reaction of 1 mole MeMgI with 42 g. $(:CHSiCl_2)_2$ gave 80.5% $(:CHSiMe_2)_2$, $b_{760}$ 145.5°, $n_D^{20}$ 1.4310, $d_{20}$ 0.7589; 76% by Wurtz reaction with Na, $Me_3SiCl$ (in $Et_2O$-ligroine with a little EtOAc) and $CHCl{:}CHSiMe_3$. $(:CHSiCl_2)_2$ and EtMgBr gave 76.6% $(:CHSiEt_2)_2$, $b_{760}$ 262-3°, $n_D^{20}$ 1.4615, $d_{20}$ 0.8226. A Wurtz reaction of 9 g. Na (in MePh) with 20 g. $Me_3SiCl$, 1.5 ml. EtOAc, and 24.5 g. $CH_2{:}CClSiMe_3$ gave 46.5% $CH_2{:}C(SiMe_3)_2$, b. 150-1°. $(:CHSiMe_2)_2$ (11.4 g.) at −70° treated with 10.6 g. $Br_2$ yielded after 3 days standing $(CHBrSiMe_2)_2$, sepd. into *isomers*, m. 28° and $b_{2.4}$ 100°, m. 7-10°, $n_D^{20}$ 1.5005, $d_{20}$ 1.3636, which fumes in air.

G. M. Kosolapoff

APPROVED FOR RELEASE: Wednesday, June 21, 2000 CIA-RDP86-00513R001134

"APPROVED FOR RELEASE: Wednesday, June 21, 2000 CIA-RDP86-00513R00113

**Direct synthesis of polysilyl chlorides from α- and β-chloroalkylsilyl chlorides.** S. I. Sadyk-Izade, E. A. Chernyshev, and V. F. Mironov (N. D. Zelinskii Inst. Org. Chem., Moscow). *Izvest. Akad. Nauk S.S.S.R.* 105, 490-8(1935).—Passage of chloroalkylsilyl chlorides over Si-Cu at 370-400° resulted in substitution of a 2nd chlorosilyl group into the alkyl chain, the yield of products decreasing in the series $Cl_3SiCH_2CH_2Cl$, $MeCHClSiCl_3$, $MeSiCl_2CH_2Cl$, $ClCH_2SiCl_3$, from 55% to 30%; polysubstitution products were formed in smaller amts. The above starting materials yielded the following products: $ClCH_2SiCl_3$ gave 2% $SiCl_4$, 10% $MeSiCl_3$, 30% starting material, 30% $CH_2(SiCl_3)_2$, b. 180.5-1°, and 8.5% $SiCl_3(CH_2SiCl_3)_2$, b. 157-8°, $d_{20}$ 1.5423, $n_D^{20}$ 1.4970; $MeSiCl_2CH_2Cl$ gave 2% $SiCl_4$, 21% $Me_2SiCl_2$, 17% starting material, 28.7% $MeSiCl_2CH_2SiCl_3$, b. 183.5-4.5°, $d_{20}$ 1.4107, $n_D^{20}$ 1.4092, and 10.7% $(MeSiCl_2CH_2)_2SiCl_2$, b. 124-4°, 1.3782, 1.4905; $MeCHClSiCl_3$ gave 3.3% $SiCl_4$, 28.9% $EtSiCl_3$, 6% starting material, 5% $Cl_3SiCHMeSiHCl_2$, b. 180.4-1°, 1.4373, 1.4780, 25% $MeCH(SiCl_3)_2$, b. 197-7.3°, 1.5121, 1.4842, 8.3% $(CHMeSiCl_3)_2$, b. 237-9°, $d_{20}$ 1.4332, 1.4910, and 6.6% $SiCl_2(CHMeSiCl_3)_2$, b. 272.5-5°, 1.4736, 1.4990; $ClCH_2CH_2SiCl_3$ gave trace of $HSiCl_3$, 3% $SiCl_4$, 8.3% $EtSiCl_3$, 6% $CH_2(CH_2SiCl_3)_2$, 17.3% $(CH_2SiCl_3)_2$, b. 166-9.2°, 5.3% $Cl_3SiCH_2CH_2SiHCl_2$, b. 183-4°, and 10% $SiCl_2(CH_2CH_2SiCl_3)_2$, b. 154.5-6°, m. 41-6°. G. M. K.

APPROVED FOR RELEASE: Wednesday, June 21, 2000 CIA-RDP86-00513R001134

"APPROVED FOR RELEASE: Wednesday, June 21, 2000 CIA-RDP86-00513R00113

MIRANOV, V. F.

Synthesis of organosilicon compounds with a double bond in the α-position by the Wurtz reaction. A. D. Petrov, V. F. Mironov, and V. G. Glukhovtsev. *Bull. Acad. Sci. U.S.S.R. Div. Chem. Sci.* 1950, 451-6(Engl. translation).—See *C.A.* 50, 16663*f*.
B. M. R.

3

APPROVED FOR RELEASE: Wednesday, June 21, 2000 CIA-RDP86-00513R001134

"APPROVED FOR RELEASE: Wednesday, June 21, 2000 CIA-RDP86-00513R00113

MIRONOV, V. F.

Synthesis and transformation of organosilicon thiocyanates and mercaptans. V. F. Mironov and N. A. Pogonkina. *Bull. Acad. Sci. U.S.S.R., Div. Chem. Sci.* 1956, 719-24 (English translation).—See *C.A.* 51, 1810a.
B. M. R.

4 pm
2 may

pm

mji

APPROVED FOR RELEASE: Wednesday, June 21, 2000 CIA-RDP86-00513R001134

"APPROVED FOR RELEASE: Wednesday, June 21, 2000 CIA-RDP86-00513R00113

Polymerization and copolymerization of alkenylsilanes under high pressure. III. A. M. Polyakova, V. V. Korshak, A. A. Sakharova, A. D. Petrov, V. F. Mironov, and G. I. Nikishin (Inst. Heterorganic Compds., Acad. Sci. U.S.S.R., Moscow). *Izvest. Akad. Nauk S.S.S.R., Otdel. Khim. Nauk* 1956, 979–85; cf. *C.A.* 49, 15727*i*.—Polymerization and copolymerization of alkenylsilanes was performed in the presence of 3% $(Me_2CO)_2$ at 130° at 5500 atm. The following monomers gave viscous liquid polymers: $Et_3SiCH{:}CH_2$, $Et_3SiCMe{:}CH_2$, $Et_3SiCH{:}CHMe$, $Et_3SiCH{:}CMe_2$, $Me_3SiCMe{:}CH_2$, $(:CHSiEt_3)_2$, $(Me_3Si)_2C{:}CH_2$, $(CH_2{:}CH)_4Si$ (gave solid polymer), dimer of $(Me_3Si(CH{:}CH_2)_2$, $Et_3SiCH_2CH{:}CH_2$, $Me_3SiCH_2CH{:}CH_2$, $Cl_3SiCH_2CH{:}CH_2$, $Me_3SiCH_2CMe{:}CH_2$, $Me_2PhSiCH_2CH{:}CH_2$, $Bu_3SiCH_2CH{:}CH_2$, $(EtO)_3SiCH_2CH{:}CH_2$, $Et_3Si(CH_2CH{:}CH_2)_2$ (solid polymer formed), $Me_3Si(CH_2CH{:}CH_2)_2$ (solid polymer formed), $Et_2SiH(CH_2CH{:}CH_2)_2$ (solid polymer formed), $MeSiH(CH_2CH{:}CH_2)_2$ (solid polymer), $MePhSi(CH_2CH{:}CH_2)_2$ (solid polymer), $Ph_2Si(CH_2CH{:}CH_2)_2$ (solid polymer), $MeSiH(CH_2CH{:}CH_2)_2$ (solid polymer), $PrSiH(CH_2CH{:}CH_2)_2$ (solid polymer), $Me(1\text{-}C_{18}H_{37})Si(CH_2CH{:}CH_2)_2$ (solid polymer), $Me_3Si(CH_2CMe{:}CH_2)_2$ (solid polymer), $MeSi(CH_2CH{:}CH_2)_3$ (solid polymer), $MeSi(CH_2CMe{:}CH_2)_3$ (solid polymer), $Si(CH_2CH{:}CH_2)_4$ (solid polymer), $Si(CH_2CMe{:}CH_2)_4$ (solid polymer). The following monomers failed to polymerize: $Me_3SiCH{:}CHMe$, $Me_3SiCH{:}CMe_2$, $Et_3SiCH{:}CHCl$, $Me_3SiCH{:}CHCl$, $Me_3Si(CH{:}CH_2)_3$, $Et_3SiCHMeCH{:}CH_2$, $R_3Si(OEt)_3$ ($R_3$ = cyclopentadienyl). Viscous polymers were obtained from: $Et_3SiCH_2CH_2CH{:}CH_2$, $Me_3SiCH_2CH_2CH{:}CH_2$, $Et_2MeSiCH_2CH_2CH{:}CH_2$, $EtMe_2SiCH_2CH_2CH{:}CH_2$, $Et_3SiCHMeCH_2CH_2CH_2$ (only at 5500

APPROVED FOR RELEASE: Wednesday, June 21, 2000 CIA-RDP86-00513R001134

"APPROVED FOR RELEASE: Wednesday, June 21, 2000 CIA-RDP86-00513R00113

Polyakova, N.N., Korshak, V.V. ...

(dtm. pressure), $Mt_2SiCH_2CH_2CMe:CH_2$, $Et_2SiCH_2CHMe$-$CH:CHMe$, $Pr_2SiCH_2CHMeCH_2CH:CH_2$, $Bu_2SiCH_2CH$-$MeCH_2CH:CH_2$, $Me_2SiCH_2CH_2CH_2CH_2CH:CH_2$, and $R_2SiMe_2$ ($R_2$ as above). Copolymers with $CH_2:CMeCO_2Me$ were prepd. with $PhMe_2SiCH_2CH:CH_2$, $PhMeSi(CH_2CH:$-$CH_2)_2$, $Me_2Si(CH_2CH:CH_2)_2$, $Me_2Si(CH_2CMe:CH_2)_2$, the products being generally hard solids. Mol. wts. and physicomech. properties of the copolymers are tabulated. Polymers of dialkenylsilanes were generally tridimensional structures which do not soften up to 400°. The methacrylate copolymers display a transition temp. forming highly elastic materials, which at higher temp. form flowing fluids.

G. M. Kosolapoff

2/2

OM mk

800000

APPROVED FOR RELEASE: Wednesday, June 21, 2000 CIA-RDP86-00513R001134

"APPROVED FOR RELEASE: Wednesday, June 21, 2000 CIA-RDP86-00513R00113

MIRONOV, V. F.

Synthesis of unsaturated organogermanium compounds. A. D. Petrov, V. F. Mironov, and I. R. Dolgii (N. D. Zelinskii Inst. Organ. Chem. Acad. Sci. U.S.S.R., Moscow). *Izvest. Akad. Nauk S.S.S.R., Otdel. Khim. Nauk* 1956, 1146-8.—Passage of $CH_2:CHCH_2Cl$ (300 g.) at 340° at 60 drops/min. over mixed 25 g. powd. Ge and 10 g. Cu gave 170 g. condensate yielding 85 g. $CH_2:CHCH_2GeCl_3$ (I), $b_{10.4}$ 153.5°, $n_D^{20}$ 1.4928, $d_4^{20}$ 1.5274. Similarly $CH_2:CMeCH_2Cl$ gave 24% $CH_2:CMeCH_2GeCl_3$, $b_1$ 42°. With MeCl, run at 550°, there formed 35% $MeGeCl_3$, $b_{760}$ 110°, $n_D^{20}$ 1.4085, $d_4^{20}$ 1.7053, and 26% $Me_2GeCl_2$, $b_{760}$ 127°, $n_D^{20}$ 1.4600, $d_4^{20}$ 1.5063. With EtCl, run at 550°, there formed 65% $EtGeCl_3$, $b_{760}$ 141°, $n_D^{20}$ 1.4750, $d_4^{20}$ 1.6041. I and MeMgCl gave after 10 hrs. refluxing and treatment with $H_2O$ 68.1% $CH_2:CHCH_2GeMe_3$, $b_{760}$ 101°, $n_D^{20}$ 1.4333, $d_4^{20}$ 0.9952. Reaction of $Me_2GeCl_2$ with $CH_2:CHCH_2MgBr$ gave in 10 hrs. 42% $(CH_2:CHCH_2)_2GeMe_2$, $b_{760}$ 146°, $n_D^{20}$ 1.4645, $d_4^{20}$ 1.0337. Similar reaction with $MeGeCl_3$ gave $MeGe(CH_2CH:CH_2)_3$, 45%, $b_{10}$ 196.5°, $n_D^{20}$ 1.4807, $d_4^{20}$ 1.0222. I and EtMgBr gave 52.3% $CH_2:CHCH_2GeEt_3$, $b_{10}$ 50°; $b_{760}$ 180°, $n_D^{20}$ 1.4591, $d_4^{20}$ 1.0004. Similarly was prepd. 42.5% $CH_2:CMeCH_2GeMe_3$, $b_{760}$ 121°, $n_D^{20}$ 1.4416, $d_4^{20}$ 0.9508. To 100 g. $EtGeCl_3$ and 80 ml. (?) $SO_2Cl_2$ was added 0.7 g. $Bz_2O_2$ and the mixt. was heated 3 hrs., treated with 0.3 g. $Bz_2O_2$ and heated 1 hr. until gas evolution ceased, yielding 5 g. $EtGeCl_3$, 5 g. $MeCHClCH_2GeCl_3$, $b_{10.4}$ 167°, $n_D^{20}$ 1.4938, $d_4^{20}$ 1.5975, and 44 g. $ClCH_2CH_2GeCl_3$, $b_{10.4}$ 188°, $n_D^{20}$ 1.5094, $d_4^{20}$ 1.7587. The latter (40 g.) and 31 g. quinoline was distd. up to 200° yielding 4 g. $GeCl_4$ and 20.6% $CH_2:CHGeCl_3$, $b_{10.4}$ 127.5°, $n_D^{20}$ 1.4816, $d_4^{20}$ 1.6520. To $CH_2:CHCH_2MgBr$ from 12 g. RBr was added 20 g. $Me_2SiBr$ and after 10 hrs. refluxing there was obtained 47.6% $CH_2:CHCH_2SiMe_3$, $b_{760}$ 125.5°, $n_D^{20}$ 1.4734, $d_4^{20}$ 1.2549. G. M. Kosolapoff.

APPROVED FOR RELEASE: Wednesday, June 21, 2000 CIA-RDP86-00513R001134

"APPROVED FOR RELEASE: Wednesday, June 21, 2000 CIA-RDP86-00513R00113

MIRONOV, V.F.

USSR/Chemistry - Reaction processes

Card 1/2 Pub. 40 - 11/25

Authors : Petrov, A. D.; Yegorov, Yu. P.; Mironov, V. F.; Nikishin, G. I.; and Bugorkova, A. A.

Title : Reactivity and the molecular-optical properties of alkenylsilanes

Periodical : Izv. AN SSSR. Otd. khim. nauk 1, 50-55, Jan 1956

Abstract : The existence of a parallelism between the rates of thiocyanogen additions and the spectral line intensity was experimentally established for a majority of alkenylsilanes of various structure. It was found that allylsilanes and alkenylsilanes with a ternary double bond are characterized by very high activity of the double bonds toward addition reactions and also by very high spectral line intensity, infrared absorption bands as well as by the presence of

Institution : Acad. of Sc., USSR, Inst. of Organ. Chem. im. N. D. Zelinskiy

Submitted : March 18, 1955

APPROVED FOR RELEASE: Wednesday, June 21, 2000 CIA-RDP86-00513R001134

"APPROVED FOR RELEASE: Wednesday, June 21, 2000 CIA-RDP86-00513R00113

Card 2/2 Pub. 40 - 11/25

Periodical : Izv. AN SSSR. Otd. khim. nauk 1, 50-55, Jan 1956

Abstract : an exaltation of the molecular refraction. The connection between the alkenylsilane characteristics and the $\sigma - \pi$ conjugations is explained. The causes for the changes in the spectral line intensity values of double bonds are discussed. Twenty references: 16 USSR, 1 Swedish, 1 Eng., 1 Australian and 1 USA (1946-1955). Tables; graphs.

APPROVED FOR RELEASE: Wednesday, June 21, 2000 CIA-RDP86-00513R001134

"APPROVED FOR RELEASE: Wednesday, June 21, 2000 CIA-RDP86-00513R00113

MIRONOV, V. F.

E-2

USSR/Organic Chemistry - Synthetic Organic Chemistry

Abs Jour : Referat Zhur - Khimiya, No 2, 1957, 4464

Author : Petrov, A.D., Mironov, V.F., Vdovin, V.M., Zalykh-Zade, S.I.

Inst : Academy of Sciences USSR

Title : Cyanethylation of Silicochloroform

Orig Pub : Izv. AN SSSR, Otd. khim. n , 1956, No 2, 256-25

Abstract : It is shown that on heating for 4 hours at 160-170° and 20 atmospheres in the presence of Raney nickel, $HSiCl_3$ is added to $CH_2=CHCN$ (I), to give $Cl_3SiCH_2CH_2CN$ (II) (BP 79-82°/10 mm, MP 32-33°) with a yield of 12 2%. $HSi(CH_3)Cl_2$, under the same conditions, is added to I, but pure $Cl_2(CH_3)SiCH_2CH_2CN$ could not be isolated. On interaction of II with $CH_3MgI$ was obtained

Card 1/2



APPROVED FOR RELEASE: Wednesday, June 21, 2000 CIA-RDP86-00513R001134

"APPROVED FOR RELEASE: Wednesday, June 21, 2000 CIA-RDP86-00513R00113

E-2

USSR/Organic Chemistry - Synthetic Organic Chemistry

Abs Jour : Referat Zhur - Khimiya, No 2, 1957, 4464

$(CH_3)_3SiCH_2CH_2CCCH_3$, BP 82-85°/65 mm, $n^{20}D$ 1.4231, $d_4^{20}$ 0.8339.

Card 2/2

- 1?? -

APPROVED FOR RELEASE: Wednesday, June 21, 2000 CIA-RDP86-00513R001134

"APPROVED FOR RELEASE: Wednesday, June 21, 2000 CIA-RDP86-00513R00113

USSR/Organic Chemistry - Synthetic Organic Chemistry, E-2

Abst Journal: Referat Zhur - Khimiya, No [illegible], 1957, 948

Author: Petrov, A. D., Mironov, V. F., and Glukhovtsev, V. G.

Institution: Academy of Sciences USSR

Title: Wurtz-type Synthesis of Organosilicon Compounds with a Double Bond in the α-Position

Original Periodical: Izv. AN SSSR, Section on Chemical Sciences, 1956, No 4, 461-466

Abstract: The condensation of trialkylchlorosilanes with derivatives of $CH_2 = CHCl$ (I) with the aid of Na and in the presence of ethyl acetate gives high yields of organosilicone compounds with α-positioned double bonds. The condensation of $SiCl_4$ (II) with I under such conditions yields $(CH_2 = CH)_4Si$ (III), while $(CH_3)_2C = CHBr$ (IV) and $CH_3CHBr$ (V) condensed with $ClSi(CH_3)_2C_2H_5$ (VI) yield $(CH_3)_2C = CHSi(CH_3)_2C_2H_5$ (VII) and $CH_3CH = CHSi(CH_3)_2C_2H_5$ (VIII). Reaction of $(CH_3)_3SiCH = CHCl$ (IX) and $(CH_3)_3SiCl = CH_2$ (X) with $ClSiR_3$ (XI), where R = $CH_3$, yields $[(CH_3)_3SiCH =]_2$ (XII) and $[(CH_3)_3Si]_2C = CH_2$ (XIII). Condensation of

Card 1/5

APPROVED FOR RELEASE: Wednesday, June 21, 2000 CIA-RDP86-00513R001134

"APPROVED FOR RELEASE: Wednesday, June 21, 2000 CIA-RDP86-00513R00113

USSR/Organic Chemistry - Synthetic Organic Chemistry, E-

Abst Journal: Referat Zhur - Khimiya, No [illegible]

Abstract: $CH_3CCl = CHCH_2OH$ (XIV) with XI in the presence of pyridine yields $CH_3CCl = CHCH_2OSiR_3$ (XV) which, when reacted with XI in the presence of Na, forms $R_3SiC(CH_3) = CHCH_2OSiR_3$ (XVI); XVI can be hydrolyzed to $R_3SiC(CH_3) = CHCH_2OH$ (XVII). The latter reacts with $CH_2 = THCN$ (XVIII) to give $R_3SiC(CH_3) = CHCH_2OCH_2CH_2CHCN$ (XIX). The $CH_2 = CH$- group in III does not show activation with MR. The characteristic frequency of $CH_2 = CH$- in the spectra of III and [illegible] $H_3SiCH = CH_2$ is 1,272, 1,404, 1,594, and 1,654 $cm^{-1}$. To 140 gms of dispersed Na in 300 ml of ether and 250 gms of II are added 3-5 ml ethyl acetate; a stream of I is passed through the boiling ether for [illegible] hours. The yield of III is 65%, mp [illegible] 0/740 mm, $n_D^{20}$ 1.4625, $d_4^{20}$ [illegible]. The chlorination of 2 kg of $CH_2H_3SiCl_3$ gives a conversion of 93% to a mixture of $ClCH_2CH_2SiCl_3$ (XX), bp 191.7°/751 mm, $n_D^{20}$ 1.4652, $d_4^{20}$ 1.4239, and $CH_3CHClSiCl_3$ (XXI), bp 136.5°/746.5 mm, $n_D^{20}$ 1.4545, $d_4^{20}$ 1.3912, in the ratio 1:1.5. The chlorination of XXI at 125° gives an 69% conversion to a 1:0.6 mixture of $CH_3CCl_2SiCl_3$ and $CH_2ClCHClSiCl_3$ (XXII) (bp [illegible]0/755 mm, $n_D^{20}$ 1.5[illegible]5, $d_4^{20}$ [illegible]). The chlorination of XX at 140° results in a 93% conversion to a not easily separable mixture of XXII and $CHCl_2CH_2SiCl_3$ (XXIII); the

Card 2/5

APPROVED FOR RELEASE: Wednesday, June 21, 2000 CIA-RDP86-00513R001134

"APPROVED FOR RELEASE: Wednesday, June 21, 2000 CIA-RDP86-00513R00113

USSR/Organic Chemistry - Synthetic Organic Chemistry, E-

Abst Journal: Referat Zhur - Khimiya, No [illegible], [illegible], [illegible]

Abstract: mixture boils at [illegible]. From $(Cl_3Si)_2CHCH_3$ it is possible to obtain $(Cl_3Si)_2CCl_2CH_3$ in yields of 44%, bp 224°/741 mm, $n_D^{20}$ [illegible], $d_4^{20}$ 1.5926; when HCl is split off, $(Cl_3Si)_2C = CH_2$ is formed, bp 199-200°/746 mm, $n_D^{20}$ [illegible]. When HCl is evolved in the presence of dimethyl aniline from a mixture of XXII and XXIII, a 66% conversion to $Cl_3SiCH = CHCl$ (XXIV), bp [illegible] mm, $n_D^{20}$ [illegible], $d_4$ [illegible], and $Cl_3SiCCl = CH_2$ (XXV), bp [illegible] mm, $n_D^{20}$ [illegible], $d_4$ [illegible], is obtained; the ratio of the products is [illegible]:1.3. From [illegible] gms of XXV and $CH_3MgI$ (45 gms Mg, 350 gms $CH_3I$, in 0.5 l ether, refluxing for 5 hours) X is prepared in yields of [illegible]%, bp [illegible]°; by the same method, $CH_2 = CCl_2Si(C_2H_5)_3$ is prepared from XV and $C_2H_5MgBr$, yield 78.5%, bp [illegible]°/730 mm, $n_D^{20}$ [illegible], $d_4^{20}$ 0.9256. Reaction of XXIV with $CH_3MgI$ gives IX, yield [illegible]%, bp [illegible]°/741 mm, $n_D^{20}$ [illegible], $d_4^{20}$ 0.8924. A dispersion of [illegible] gms Na in [illegible] l ether is prepared; 20 gms XI (R = $CH_3$), 1.2 ml X, and [illegible] ml of ethyl acetate are added. After the start of the reaction an additional 23.5 gms of X are added and the mixture refluxed [illegible] hours. The yield of III is 46.5%, bp [illegible]/756.5 mm, $n_D^{20}$ [illegible], $d_4^{20}$ 0.7923. From [illegible] gms Na, [illegible] gms XI (R = $CH_3$), and 27 gms IX, XII is prepared in yields of [illegible]%, bp [illegible]°/746 mm.

Card 3/[illegible]

APPROVED FOR RELEASE: Wednesday, June 21, 2000 CIA-RDP86-00513R001134

"APPROVED FOR RELEASE: Wednesday, June 21, 2000 CIA-RDP86-00513R00113

USSR/Organic Chemistry - Synthetic Organic Chemistry, E-2

Abst Journal: Referat Zhur - Khimiya, No 1, 1957, 948

Abstract: $n_D^{20}$ 1.4310, $d_4^{20}$ 0.7589. From 17 gms Na, 41 gms VI, one milliliter ethyl acetate, and 47 gms IV, VII is prepared in yields of 51.1%, bp 139.5°/743 mm, $n_D^{20}$ 1.4361, $d_4^{20}$ 0.7649; V and VI give VIII, yield 32.5%, bp 118.5°/739 mm, $n_D^{20}$ 1.4265, $d_4^{20}$ 0.7546. When a mixture of 52 gms XI (R = $CH_3$) and 39 gms XIV is refluxed for 4 hours, XV (R = $CH_3$) is obtained, yield 50.8%, bp 164-165°, $n_D^{20}$ 1.4350, $d_4^{20}$ 0.[illegible]. To a mixture of 142 gms XI (R = $C_2H_5$), 80 gms pyridine, and 250 ml $C_6H_6$, 109 gms XIV are added and the mixture allowed to stand for 4[illegible] hours. The yield of XV (R = $C_2H_2$) is 82.5%, bp 72°/2 mm, $n_D^{20}$ 1.453[illegible], $d_4^{20}$ 0.9553. To 8 gms Na in 200 ml ether and 21 gms XI (R = $CH_3$), 28.5 gms XV are added over a period of 2 hours after the initiation of the reaction with ethyl acetate. After heating for 3 hours XVI (R = $CH_3$) is obtained, yield 52%, bp 195°/759 mm, $n_D^{20}$ 1.4369, $d_4^{20}$ 0.8309. XV (R = $C_2H_5$) and XI (R = $C_2H_5$) give XVI (R = $C_2H_5$), yield 52%, bp 101°/2 mm, $n_D^{20}$ 1.4628, $d_4^{20}$ 0.8716. When 16 gms of 16 (R = $CH_3$) in 20 ml alcohol are refluxed with 30 ml water and 4 drops HCl for 8 hours, XVII (R = $CH_3$) is obtained, yield 60%, bp 47°/2 mm, $n_D^{20}$ 1.4590, $d_4^{20}$ 0.8698. The hydrolysis of XVI (R = $C_2H_5$) yields XVII (R = $C_2H_5$), yield 59%, bp 81°/2 mm, $n_D^{20}$ 1.4725, $d_4^{20}$ 0.8866.

Card 4/5

APPROVED FOR RELEASE: Wednesday, June 21, 2000 CIA-RDP86-00513R001134

"APPROVED FOR RELEASE: Wednesday, June 21, 2000 CIA-RDP86-00513R00113

PETROV, A.D.; MIRONOV, V.F.; MASHANTSKER, D.

Dehydrochlorination of di- and monochloralkylsilane chlorides. Rearrangement of 1,2-bis-(trichlorosilyl)chloroethane during the dehydrochlorination with aluminum chloride. Izv.AN SSSR Otd.khim.nauk no.5:550-558 My '56. (MIRA 9:9)

1.Institut organicheskoy khimii imeni N.D.Zelinskogo Akademii nauk SSSR.
(Hydrochloric acid) (Silane) (Ethane)

APPROVED FOR RELEASE: Wednesday, June 21, 2000 CIA-RDP86-00513R001134

"APPROVED FOR RELEASE: Wednesday, June 21, 2000 CIA-RDP86-00513R00113

MIRONOV, V.F.; POGONKINA, N.A.

Synthesis and conversions of silicon organic rhodanides and mercaptans. Izv.AN SSSR. Otd.khim.nauk no.6:707-712 Je '56. (MIRA 9:9)

1.Institut organicheskoy khimii imeni N.D.Zelinskogo Akademii nauk SSSR.
(Silicon organic compounds)

APPROVED FOR RELEASE: Wednesday, June 21, 2000 CIA-RDP86-00513R001134

"APPROVED FOR RELEASE: Wednesday, June 21, 2000 CIA-RDP86-00513R00113

MIRONOV, V. F.

Category: USSR/Chemistry of High-Molecular Substances F.

Abs Jour: Referat Zhur-Khimiya, No 9, 1957, 30910

Author : Korshak V. V., Petrov A. D., Matveyeva N. G., Mironov V.F., Nikitin G. I., Sadykh-Zade S. I.

Inst : not given

Title : Concerning High-Molecular Compounds. XCVII. Polymerization and Copolymerization of Some Silicon-Olefins

Orig Pub: Zh. obshch. khimii, 1956, 26, No 4, 1209-1212

Abstract: Study of the tendency of tri-n-butyl-allyl silane (I), BP 135°/12 mm, $n^{20}D$ 1.4534, $d_4^{20}$ 0.8031, methyl-diallyl silane (II) BP 122.5°/745 mm, $n^{20}D$ 1.4430, $d_4^{20}$ 0.7360, dimethyl-dimethallyl silane (III) BP 178-185°/758 mm, $n^{20}D$ 1.4515, $d_4^{20}$ 0.8012, tetramethallyl silane (IV) BP 269.5°/745 mm, $n^{20}D$ 1.4950, $d_4^{20}$ 0.8609, dimethyl-phenyl-vinyl-ethinyl silane (V) BP 83-84°/65 mm, $n^{20}D$ 1.5391, $d_4^{20}$ 0.0229, to polymerize and copolymerize with methyl methacrylate (VI) and styrene (VII). I-IV do not form polymers either on heating (100° and 160°, 50 hours) with or

Card : 1/2



APPROVED FOR RELEASE: Wednesday, June 21, 2000 CIA-RDP86-00513R001134

"APPROVED FOR RELEASE: Wednesday, June 21, 2000 CIA-RDP86-00513R00113

MIRONOV, V. F.

4

Direct synthesis of alkylpolysilane chlorides. A. D. Petrov, S. I. Sadykh-Zade, E. A. Chernyshev, and V. F. Mironov (Inst. Org. Chem., Acad. Sci. U.S.S.R., Moscow). Zhur. Obshchei Khim. 26, 1248-54(1956)); cf. C.A. 50, 11233/, 13728a.—Halogenated chlorosilanes were passed over pieces of 80-20 Si-Cu alloy at indicated temps. to afford a direct synthesis of polysilanes shown below. At 300-70° $ClCH_2SiCl_3$ gave 2% $SiCl_4$, 10% $MeSiCl_3$, 30% $ClCH_2SiCl_3$, 30% $CH_2(SiCl_3)_2$, and 8.5% $SiCl_2(CH_2SiCl_3)_2$, $b_{10}$ 187-8°. At 360-70° $ClCH_2CH_2SiCl_3$ gave 3% $SiCl_4$, 8.3% $EtSiCl_3$, 5% $CH_2:CHSiCl_3$, b. 90-2°, 3.3% $Cl_3SiCH_2CH_2Cl$, b. 182-4°, 43.6% $(CH_2SiCl_3)_2$, b. 199°, and 10% $SiCl_2(CH_2CH_2SiCl_3)_2$, $b_{1.5}$ 154.5-6°. $MeSiCl_2CHCl_2$ at 360-70° gave 4.9% $SiCl_4$, 25.6% $MeSiCl_3$, 4.2% $MeSiCl_2CH_2Cl$, b. 120-2°, 10.5% $MeSiCl_2CH_2SiCl_3$, b. 182.5-3°, and 14% $MeSiCl_2CH(SiCl_3)_2$, m. 49-50°, $b_{10}$ 124-5°. $MeSiCl_2CH_2Cl$ at 360-70° gave 2% $SiCl_4$, 21% $MeSiCl_3$, 17.3% $MeSiCl_2CH_2Cl$, 28.7% $MeSiCl_2CH_2SiCl_3$, b. 183.5-4.5°, and 16.7% $SiCl_2(CH_2SiMeCl_2)_2$, $b_1$ 123-4°. $CHCl(SiCl_3)_2$ at 360-70° gave 6.3% $SiCl_4$, 16.7% $CH_2(SiCl_3)_2$, b. 179.9°, 29.8% $CH(SiCl_3)_3$, $b_2$ 108-9°, m. 57°, and 10.4% $[CH(SiCl_3)_2]_2$, $b_2$ 139-40°. At 360-70° $Cl_2SiCH_2CHCl_2$ gave 3.2% $HSiCl_3$, 13% $SiCl_4$, 15.2% $CH_2:CHSiCl_3$, b. 90-3°, and 9.1% $ClCH:SiCl_2$, b. 133-32.5°. At 360-70° $Cl_2SiCHClMe$ gave 3.3% $SiCl_4$, 28.3% mixed $EtSiCl_3$ and $CH_2:CHSiCl_3$, 5% $Cl_2SiCHClMe$, 5% $Cl_2SiCHMeSiHCl_2$, b. 100.4-1°, 25% $Cl_2SiCHMeSiCl_3$, b. 197-7.3°, 3.3% $(CHMeSiCl_3)_2$, b. 237-9°, and 6.6% $SiCl_2(CHMeSiCl_3)_2$, b. 227-75°. At 360-70° $Cl_2SiCHCl_2$ gave 35.2% $SiCl_4$, 3.5% $MeSiCl_3$, 3.6% $ClCH_2SiCl_3$, 22.4% $CH_2(SiCl_3)_2$, $b_5$ 58-9°, and 13% $CH(SiCl_3)_3$, $b_2$ 113-14.5°, m. 55-6°. At 300-70° $CCl_2(SiCl_3)_2$ gave 18.2% $SiCl_4$ and 11.4% $[C(SiCl_3)_2]_2$, m. 55-9°, $b_{12}$ 200-8°. Direct synthesis with $CCl_4$ gave the last product and tetrachloroethylene. Direct synthesis from $MeSiCl_2CHCl_2$ gave 25.0% $MeSiCl_3$, some $MeSiCl_2CH_2SiCl_3$, and 14% $MeSiCl_2CH(SiCl_3)_2$, $b_{10}$ 124-5°, m. 49-50°. Constants of purified products were: $CHMe(SiCl_3)_3$, $b_{100}$ 197-7.3°, $n^{25}_D$ 1.4842, $d_{20}$ 1.5131; $CHMe(SiHCl_2)SiCl_3$, $b_{760}$ 180.4-1°, 1.4780, 1.4273; $MeSiCl_2CH_2SiCl_3$, $b_{100}$ 183.5-4.5°, 1.4693, 1.4107; $(CHMeSiCl_3)_2$, $b_{760}$ 237-9°, 1.4910, 1.4732; $SiCl_2(CHMeSiCl_3)_2$, $b_{760}$ 273.5-5°, 1.4990, 1.4736; $SiCl_2(CH_2SiCl_3)_2$, $b_5$ 157-8°, 1.4970, 1.5423; $SiCl_2(CH_2SiMeCl_2)_2$, $b_5$ 123-4°, 1.4905, 1.3782; $SiCl_2(CH_2CH_2SiCl_3)_2$, $b_{1.5}$ 154.5-6°, m. 44-6°; $CH(SiCl_3)_3$, m. 57°, $b_2$ 108-9°; $MeSiCl_2CH(SiCl_3)_2$, m. 49-50°, $b_{10}$ 124-5°; $[CH(SiCl_3)_2]_2$, $b_2$ 139-40°, 1.6212, 1.6929.

G. M. Kosolapoff

1/2

2/2

PROVED FOR RELEASE: Wednesday, June 21, 2000 CIA-RDP86-00513R00113

"APPROVED FOR RELEASE: Wednesday, June 21, 2000 CIA-RDP86-00513R00113

MIRONOV, V. F.

Direct synthesis of alkylpolysilane chlorides. A. D. Petrov, S. I. Sadykh-Zade, E. A. Chernyshev, and V. F. Mironov. J. Gen. Chem. U.S.S.R. 26, 1413-18(1956)(English translation).—See C.A. 50, 14510f. B. M. R.

1-4E2C
2-May

APPROVED FOR RELEASE: Wednesday, June 21, 2000 CIA-RDP86-00513R001134

"APPROVED FOR RELEASE: Wednesday, June 21, 2000 CIA-RDP86-00513R00113

Mironov, V. F.

3 2 May

Relative reactivity of the C—Cl bond of α- and γ-chloroalkyltrimethylsilanes in reaction with potassium iodide. V. F. Mironov. *Proc. Acad. Sci. U.S.S.R., Sect. Chem.* 108, 225-8(1956)(English translation).—See *C.A.* 50, 14515a. R. M. B.

Chem

pm mt

APPROVED FOR RELEASE: Wednesday, June 21, 2000 CIA-RDP86-00513R001134

"APPROVED FOR RELEASE: Wednesday, June 21, 2000 CIA-RDP86-00513R00113

USSR/Organic Chemistry - Theoretical and General Questions on Organic Chemistry. E-1

Abst Journal: Referat Zhur - Khimiya, No 1, 1[illegible]

Author: Mironov, V.F.

Institution: Academy of Sciences USSR

Title: The Relative Reactivity of the C-Cl Bond in α- and γ-Chloroalkyltrimethylesilanes with Potassium Iodide

Original Periodical: Dokl. AN SSSR, 1956, Vol 108, No 2, 266-269

Abstract: The exchange reaction between α-chloromethyltrimethylesilane (I) and γ-chloropropyltrimethylesilane (II) with KI was investigated in order to clarify the relative reactivity in the C-Cl bond in bimolecular nucleophilic substitution reactions. It was established that the halogen in α-chlorosilanes (α-KRKh) is considerably more mobile than in γ-KRKh. When 0.3 moles of I are distilled together with 0.3 moles of II in acetone solution, 0.21 moles of α-iodomethyltrimethylesilane (III) are evolved; the amount of γ-iodopropyltrimethylesilane (IV) evolved is only ~0.03 moles. The contradictions between the results

Card 1/3

APPROVED FOR RELEASE: Wednesday, June 21, 2000 CIA-RDP86-00513R001134

"APPROVED FOR RELEASE: Wednesday, June 21, 2000 CIA-RDP86-00513R00113

USSR/Organic Chemistry - Theoretical and General Questions on Organic Chemistry. E-1

Abst Journal: obtained and earlier work (L. H. Sommer and E. Dorfman, J. Amer. Chem. Soc., 1946, 68, 488) concerning the great reactivity of the C-Cl bond in the γ position to the Si in the reaction between $Cl(CH_2)_nSiCl_3$ with alcoholic alkali apparently can be explained not by different mechanisms for the reaction of α- and γ-KRKh with alkali or KI but bi different mechanisms for the reaction of alkali with α- and γ-$Cl(CH_2)_nSiCl_3$. The following α- and γ-KRKh have been synthesized by the reactinn of γ- and γ- chloroalkylsilylchlorides with $RMgX_2$ (the starting materials, percent yield, B.P. in °C/mm, $n^{20}D$ and $d_4^{20}$ are indicated in that order): I, $CH_3MgCl$ and $ClCh_2Si(CH_3)Cl_2$ (v), 85, 97-98, --, --; II, $CH_3MgCl$ and $Cl(CH_2)SiCl_2$, 84, 150.5/744, 1.4319, 0.8789; γ-chloropropyldiethylmethylesilane, $C_2H_5MgBr$ and $Cl(CH_2)_3Si(CH_3)Cl_2$ (VI), 65.5, 64/3, 1.4483, 0.8976; γ-chloropropyldipropylmethylesilane, n-$C_3H_7MgBr$ and VI, 58, 69-70/1, 1.4515, 0.8887; α-chloromethyldibutylmethylsilane, n-$C_4H_9MgBr$ and V, 74.7, 227.5/767, 1.4480, 0.8827; γ-chloromethyldiphenylmethylesilane, $C_6H_5MgBr$ and V, 60.7, 93.5/1, 1.5717, 0.9945; α-chloromethyltripropylesilane, n-$C_3H_7MgBr$ and $ClCh_2ClCl_2$, 25, 222/733, 1.4530, 0.8919. The following α- and γ-iodosilanes have been synthesized by heating the corresponding α- and

Card 2/3

USSR/Organic Chemistry - Theoretical and General Questions on Organic Chemistry, E-1

Abst Journal: Referat Zhur - Khimiya, No 1, 1957, 755

APPROVED FOR RELEASE: Wednesday, June 21, 2000 CIA-RDP86-00513R00113

Abstract: γ-KRKh with KI in acetone solution (the time of heating 14 hours, the yield in percent, the B. P. in °C/mm, and $n^{20}D$ and $d_4^{20}$ are given in that order): α-iodomethyldipropylmethylesilane, 45, 71.5, 227-228/746, 1.4944, 1.2742; IV, 32, 43, 191-192/744, 1.4[illegible], 1.3256; III, 32, 75, 139-139.5, 1.4915, --. V was obtained by chlorinating $(CH_3)_2SiCl_2$ for 25 hours at a temperature below 126°; the yield of V is 76.5%, B. P. 120-121°. In addition to V, $Cl_2CHSi(CH_3)Cl_2$ (VII) is also formed with a yield of 16.5% and a B. P. of 148-149°. At higher temperatures (up to 149°) the yield of VII increases to 56% and the yield of V drops to 11.8%. The chlorination of I (20 hours) under conditions of droplet condensation (up to 135°) leads to the formation of $Cl_2CHSi(CH_3)_3$, B. P. 131-132°, and $(CH_3)_2Si(CH_2Cl)_2$, B. P. 153°, in the ratio 1:1.8; the total yield is 88% based on I charged.

Card 3/3

"APPROVED FOR RELEASE: Wednesday, June 21, 2000 CIA-RDP86-00513R00113

MIRONOV, V.F.

Dehydrochlorination of dichloroisopropyltrichlorosilanes and methylation of chloroisopropenyltrichlorosilanes. A. D. Petrov, V. F. Mironov, and V. G. Glukhovtsev (N. D. Zelinskii Inst. Org. Chem., Acad. Sci. U.S.S.R., Moscow). *Doklady Akad. Nauk S.S.S.R.* 110, 93-6(1956).—iso-PrMgBr from 780 g. iso-PrBr and 1550 g. $SiCl_4$ gave 536 g. iso-$PrSiCl_3$, $b_{760}$ 119°, $n^{20}_D$ 1.4336, $d_{20}$ 1.2024($n^{20}_D$, $d_{20}$ are also used below). This chlorinated finally at 148° (cf. Ponomarenko and Mironov, *C.A.* 49, 3795c) gave (after 63 hrs.) 230 g. starting material, 340 g. $Me_2CClSiCl_3$ (I), $b_{760}$ 161°, and 500 g. $ClCH_2CHMeSiCl_3$ (Ia), $b_{760}$ 164°, 1.4070, 1.3520. I (74 g.) and 64 g. quinoline distd. up to 220° gave 13 g. $CH_2{:}CMeSiCl_3$ (II), $b_{760}$ 113.5°, 1.4453, 1.2285; distn. of II with a little $AlCl_3$ gave some 45% vinyl deriv. Heating 230 g. I, 155 g. $SO_2Cl_2$, and 0.5 g. $Bz_2O_2$ 10 hrs. with 2 addns. of $Bz_2O_2$ (0.5 g. each) gave 100 g. I and 93 g. not quite pure $ClCH_2CMeClSiCl_3$ (III), $b_{10}$ 183.5°, b. 188.5°, $n^{20}_D$ 1.4845, m. 24-7°; chlorination of II gave the same material, $b_{760}$ 191°, $n^{20}_D$ 1.4840, m. −7 to +13°, indicating a mixt. Heating 303 g. Ia with 230 g. $SO_2Cl_2$ and 0.5 g. $Bz_2O_2$ 8 hrs. gave 116 g. $Cl_2CHCHMeSiCl_3$ (IV), $b_{760}$ 192.5°, 1.4833, 1.4760, and 117 g. $(ClCH_2)_2CHSiCl_3$ (V), $b_{760}$ 205°, 1.4940, 1.4947. III distd. with quinoline gave 30% $ClCl{:}CMeSiCl_3$ (VI), $b_{760}$ 154°, 1.4815, 1.3830, while IV gave 29% of the same product, $b_{760}$ 153°, 1.4780, 1.3820. V and quinoline gave 30.5% $ClCH_2C({:}CH_2)SiCl_3$, $b_{760}$ 164°, 1.4794, 1.3967, which with MeMgCl gave 45.5% $CH_2{:}CH{:}SiMe_3$, $b_{760}$ 110°, 1.4195, 0.7482. VI and MeMgCl gave 65% $ClCH{:}CMeSiMe_3$ (VII), $b_{760}$ 137.5°, 1.4500, 0.9045. Reaction of 20 g. $Me_3SiCl$, 10 g. powd. Na, 1 ml. EtOAc, and 27 g. VII in $Et_2O$ gave in 5 hrs. 16.5 g. $Me_3SiCH{:}CMeSiMe_3$, $b_{760}$ 163.5°, 1.4435, 0.7809.

G. M. Kosolapoff

APPROVED FOR RELEASE: Wednesday, June 21, 2000 CIA-RDP86-00513R001134