APPROVED FOR RELEASE: 06/23/11: CIA-RDP86-00513R001134700006-6

MITSEK, V.Ye.

DEGTIAREV, G.V.; MITSEK, V.Ye., Assistant
Dagestan Agricultural Institute
"On the method of simultaneous operative intervention in thoracic and peritoneal cavities in traumatic reticulopericarditis."
SO: Vet. 28 (10) 1951, p. 37

APPROVED FOR RELEASE: 06/23/11: CIA-RDP86-00513R001134700006-6

APPROVED FOR RELEASE: 06/23/11: CIA-RDP86-00513R001134700006-6

L 07098-67

ACC NR: AP6029105

structure when the ratio of the y and x components of the demagnetizing factor is very small the Bloch sections of the domain walls should be thicker than the Neel line. /Abstracter's note: Although presumably the inferences are in general agreement with experimental data, in the paper no attempt is made to compare the predictions with experimental results./ Orig. art. has 5 formulas.

SUB CODE: 20 SUBM DATE: 00 ORIG. REF: 002 OTH REF: 004

Card 2/2

APPROVED FOR RELEASE: 06/23/11: CIA-RDP86-00513R001134700006-6

APPROVED FOR RELEASE: 06/23/11: CIA-RDP86-00513R001134700006-6

L 07098-67 EWT(1)/EWT(m)/EWP(t)/ETI IJP(c) JD/GG

ACC NR: AP6029105 SOURCE CODE: UR/0048/66/030/006/0947/0948

AUTHOR: Mitsek, A. I.

ORG: Institute of Metal Physics, Academy of Sciences of the SSSR (Institut fiziki metallov Akademii nauk SSSR)

TITLE: Effect of a magnetic field on the 180° walls in a magnetically uniaxial ferromagnet [Report, All-Union Conference on the Physics of Ferro- and Antiferromagnetism held 2-7 July 1965 in Sverdlovsk]

SOURCE: AN SSSR, Izvestiya. Seriya fizicheskaya, v. 30, no.6, 1966, 947-948

TOPIC TAGS: magnetic thin film, ferromagnetic material, magnetic domain boundary

ABSTRACT: The influence of a magnetic field on the domain walls in soft ferromagnets is considered from the theoretical standpoint. Equations are adduced for the "polarization" components of a 180° domain wall in weak and strong fields. These are used to infer the behavior of a Bloch wall in a film, depending on the orientation of the easy axis relative to the field. With the easy axis in the plane of the film the Bloch walls should break up into segments, the length of which will depend on the film thickness. Further theoretical evaluations lead to the conclusion that the effective thickness of the domain walls decreases with reduction of the film thickness and in the range of extremely thin films the Block walls should come to be similar to Neel walls if not identical with them. In the presence of subdomain

Card 1/2

APPROVED FOR RELEASE: 06/23/11: CIA-RDP86-00513R001134700006-6

APPROVED FOR RELEASE: 06/23/11: CIA-RDP86-00513R001134700006-6

L 47054-66

ACC NR: AP6015469

The author expresses his gratitude to Yu. P. Irkhin for numerous discussions and valuable advice, and to M. I. Kurkin for a discussion of the results. Orig. art. has: 23 formulas.

SUB CODE: 12,20/ SUBM DATE: 12Oct65/ ORIG REF: 008/ OTH REF: 003

Card 2/2 ULR

APPROVED FOR RELEASE: 06/23/11: CIA-RDP86-00513R001134700006-6

APPROVED FOR RELEASE: 06/23/11: CIA-RDP86-00513R001134700006-6

L 47054-66 EWT(1) IJP(c)

ACC NR: AP6015469 SOURCE CODE: UR/0181/66/008/005/1498/1503

AUTHOR: Mitsek, A. I.

ORG: Institute of Physics of Metals, AN SSSR, Sverdlovsk (Institut fiziki metallov AN SSSR)

TITLE: The theory of spin waves in ferromagnetics

SOURCE: Fizika tverdogo tela, v. 8, no. 5, 1966, 1498-1503

TOPIC TAGS: spin wave theory, ferromagnetic material, Green function, function analysis

ABSTRACT: The author uses the method of the two-time Green functions to calculate $\langle S_k^z S_{-k}^z \rangle$ for small k. It is shown that a branch of "longitudinal" spin waves with a linear law of dispersion with small k should exist in a ferromagnetic. On the basis of the results obtained, the temperature dependence of the magnetic anisotropy constant is examined. It is noted in conclusion that, knowing the form of the correlation function of the type

$$\langle S_k^z S_{-k}^z \rangle \sim \frac{A}{2\delta_k} S^2 \hbar \operatorname{cth} \frac{\delta_k}{2\pi T}$$

it is possible to follow the influence of the longitudinal spin waves on the kinetic processes in ferromagnetics, the absorption of sound, the scatter of neutrons by ferromagnetics, etc.

Card 1/2

APPROVED FOR RELEASE: 06/23/11: CIA-RDP86-00513R001134700006-6

APPROVED FOR RELEASE: 06/23/11: CIA-RDP86-00513R001134700006-6

ACC NR: AP7005124

through reversible rotation of I_s is the presence in the ferromagnetic specimen of surface anisotropy on a plane surface perpendicular to the axis of easy magnetization, with the constant of this anisotropy being negative and equaling in order of magnitude the geometric mean of the parameter of exchange interaction and the anisotropy constant of the substance. In this way the magnetization reversal of ferromagnetics along the axis of easy magnetization can be explained from the standpoint of micromagnetics, i.e. from the standpoint of the thermodynamic theory of magnetization reversal. Reverse-phase nucleation then occurs owing to the reversible rotation of the vector of spontaneous magnetization. Orig. art. has: 20 formulas.

SUB CODE: 20, 11/ SUBM DATE: 19Nov65/ ORIG REF: 004/ OTH REF: 006

Card 2/2

APPROVED FOR RELEASE: 06/23/11: CIA-RDP86-00513R001134700006-6

APPROVED FOR RELEASE: 06/23/11: CIA-RDP86-00513R001134700006-6

ACC NR: AP7005124 SOURCE CODE: UR/0126/66/022/004/0481/0486

AUTHOR: Mitsek, A. I.

ORG: Institute of Metal Physics, AN SSSR (Institut fiziki metallov AN SSSR)

TITLE: On a possible mechanism of magnetization reversal in ferromagnetics

SOURCE: Fizika metallov i metallovedeniye, v. 22, no. 4, 1966, 481-486

TOPIC TAGS: ferromagnetic material, spontaneous magnetization, magnetic anisotropy, nucleation

ABSTRACT: Ya. S. Shur et al. (Izv. AN SSSR, ser. fiz., 1964, 28, 553; FMM, 1965, 20, 673) propose a model of magnetization reversal of ferromagnetics in which reverse-phase nucleation commences with the reversible rotation of the vector I_s of spontaneous magnetization in the surface layer of the ferromagnetic. Accordingly the article explores the conditions under which this mechanism of nucleation is possible in uniaxial ferromagnetics. The distribution of spontaneous magnetization in the neighborhood of the surface of a ferromagnetic during the initial stage of magnetization reversal is calculated by the variational method. It is shown that a necessary condition for the implementation of the mechanism of nucleation

Card 1/2 UDC: 538.2.01

APPROVED FOR RELEASE: 06/23/11: CIA-RDP86-00513R001134700006-6

APPROVED FOR RELEASE: 06/23/11: CIA-RDP86-00513R001134700006-6

L 14986-66
ACC NR: AP5028553

Data for the third case were obtained theoretically using parameters from the literature for cobalt, magnetic plumbite and other ferromagnets. For internal magnetic fields, lying in the difficult magnetization plane, no blocking results other than the case where the field H lies in the plane of the boundary. If the internal field lies at an angle $\psi \neq 0$ with the plane of the domain boundary then the character changes. For the case where $\psi = \pi/2$ the field is distroted when it interacts with the boundary, blocking the domain wall. Considering the dependence of the oscillation frequency of the domain boundaries on the quasielastic force and field it was found that it could increase or decrease depending on ψ. Therefore this frequency interval for ferromagnetics, containing boundaries, oriented in arbitrary directions with the relative external field necessarily expands with rise in the magnitude of the field. Orig. art. has: 3 figures, 37 equations.

SUB CODE: 20/ SUBM DATE: 18Feb65/ ORIG REF: 004/ OTH REF: 005

Card 4/4

APPROVED FOR RELEASE: 06/23/11: CIA-RDP86-00513R001134700006-6

APPROVED FOR RELEASE: 06/23/11: CIA-RDP86-00513R001134700006-6

L 14986-66

ACC NR: AP5028553

The values of the energy and inertial mass of the domain boundaries for fields perpendicular to he boundaries were also dependent on the magnetic field.

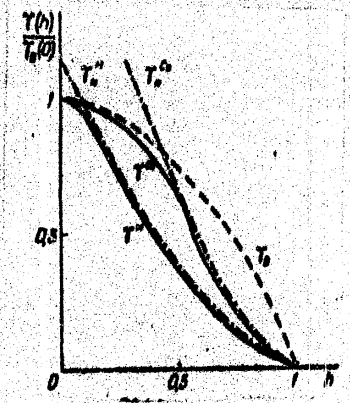

Fig. 2. Energy of domain boundaries as a function of the magnitude of the field normal to the boundary.

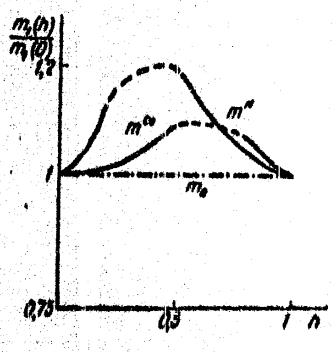

Fig. 3. Inertial mass of the boundaries as a function of the magnitude of the field normal to the plane of the boundary.

Card 3/4

APPROVED FOR RELEASE: 06/23/11: CIA-RDP86-00513R001134700006-6

APPROVED FOR RELEASE: 06/23/11: CIA-RDP86-00513R001134700006-6

L 14986-66
ACC NR: AP5028553

appropriate boundary conditions. The results for the first two cases showed that the change in inertial mass with field was equal to the change in the energy of the boundary.

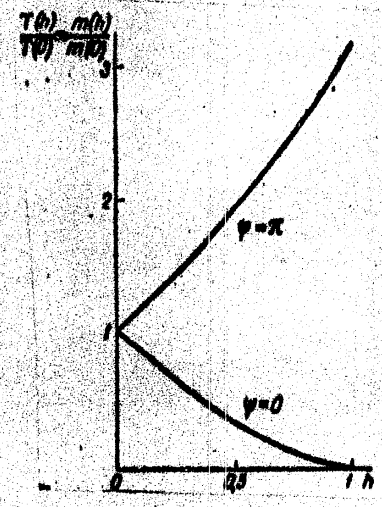

Fig. 1. Energy and inertial mass of the boundaries as a function of the value of the field lying in the plane of the boundaries.

Card 2/4

APPROVED FOR RELEASE: 06/23/11: CIA-RDP86-00513R001134700006-6

APPROVED FOR RELEASE: 06/23/11: CIA-RDP86-00513R001134700006-6

L 14986-66 EWT(1)/EWP(e)/EWT(m)/EWA(d)/EWP(t)/EWP(z)/EWP(b) IJP(c) JD

ACC NR: AP5028553 (N) SOURCE CODE: UR/0126/65/020/005/0653/0662

AUTHOR: Mitsek, A. I.

ORG: Institute of Physics of Metals AN SSSR (Institut fiziki metallov AN SSSR)

TITLE: Influence of an internal magnetic field on domain boundaries. 1. Horizontal 180°-type domain boundaries in magnetically uniaxial ferromagnets

SOURCE: Fizika metallov i metallovedeniye, v. 20, no. 5, 1965, 653-662

TOPIC TAGS: ferromagnetic material, magnetic domain structure, metal physics, magnetization, magnetic field

ABSTRACT: A study was made of the distribution of magnetization in 180°-type domain boundaries of magnetically uniaxial ferromagnets placed in external fields perpendicular to the axis of easy magnetization. Values for the energies and inertial masses of these domain boundaries were determined for three cases, where the field was: 1) parallel to the polarization of the boundary ($\psi = 0$), 2) antiparallel ($\psi = \pi$) and 3) normal to the boundary ($\psi = \pi/2$). The energies of the domain boundaries were determined from the density of the thermodynamic potential function, utilizing

Card 1/4 UDC: 539.292 : 548.0 : 538.01

APPROVED FOR RELEASE: 06/23/11: CIA-RDP86-00513R001134700006-6

APPROVED FOR RELEASE: 06/23/11: CIA-RDP86-00513R001134700006-6

ILLEGIBLE

APPROVED FOR RELEASE: 06/23/11: CIA-RDP86-00513R001134700006-6

APPROVED FOR RELEASE: 06/23/11: CIA-RDP86-00513R001134700006-6

ILLEGIBLE

APPROVED FOR RELEASE: 06/23/11: CIA-RDP86-00513R001134700006-6

APPROVED FOR RELEASE: 06/23/11: CIA-RDP86-00513R001134700006-6

ACCESSION NR: AP4030631

give rise to errors. High frequency electrical measurements on $BiFeO_3$-$LaFeO_3$ solid solutions showed that $BiFeO_3$ is not ferroelectric. The ferroelectric materials $YMnO_3$ and $YbMnO_3$ were found to be antiferromagnetic, with Neel points below the temperature of liquid nitrogen. Orig.art.has: 40 formulas, 3 figures and 1 table.

ASSOCIATION: none

SUBMITTED: 00

SUB CODE: GP, CHEM

DATE ACQ: 30Apr64

NR REF SOV: 011

ENCL: 00

OTHER: 004

Card 3/3

APPROVED FOR RELEASE: 06/23/11: CIA-RDP86-00513R001134700006-6

APPROVED FOR RELEASE: 06/23/11: CIA-RDP86-00513R001134700006-6

ACCESSION NR: AP4030631

tization to the electric and the magnetic field. Possible interaction mechanisms between polarization and magnetization are: interaction of both with the elastic deformations of the crystal; the influence of electric charge distribution on the ferromagnetic exchange interaction; the influence of electric charge distribution on the electron orbits, and therefore on the spin-orbit coupling. Particularly favorable for the simultaneous appearance of ferromagnetic and ferroelectric properties are complex crystals with the perovskite structure containing transition metals and ions having an unshared 6s electron pair. $Pb(Fe_{2/3}W_{1/3})O_3$ and $Pb(Fe_{1/2}Nb_{1/2})O_3$ were investigated and found to be ferroelectric as well as antiferromagnetic. Some of the ferric ions do not participate in the antiferromagnetic ordering and so behave paramagnetically, leading to an increase in the susceptibility with decreasing temperature even below the Neel point. Calculations of the Neel point (G.A.Smolenskiy, V.A. Isupov, N.N.Kraynik and A.I.Aranovskaya, Izv.AN SSSR, Ser.fiz.25,1333,1961), on the assumption that a ferric ion participates in the antiferromagnetic ordering only when it has at least two magnetic nearest neighbors, gave results in reasonable agreement with experiment for $Pb(Fe_{2/3}W_{1/3})O_3$. There have been indications, particularly from its behavior in certain solid solutions, that the antiferromagnetic $BiFeO_3$ might be ferroelectric. The low resistivity of this substance, however, can

Card 2/3

APPROVED FOR RELEASE: 06/23/11: CIA-RDP86-00513R001134700006-6

APPROVED FOR RELEASE: 06/23/11: CIA-RDP86-00513R001134700006-6

ACCESSION NR: AP4030631

S/0048/64/028/004/0614/0619

AUTHOR: Smolenskiy, G.A.; Bokov, V.A.; Mitsek, A.I.

TITLE: Regarding the existence of magnetic and electric ordering in crystals /Report, Symposium on Ferromagnetism and Ferroelectricity held in Leningrad 30 May to 5 June 1963/

SOURCE: AN SSSR. Izv.,Ser.fiz.,v.28, no.4, 1964, 614-619

TOPIC TAGS: ferromagnetic ferroelectric materials, perovskite structure, ferromagnetic ordering, ferroelectric ordering, $BiFeO_3$, $YMnO_3$, $YbMnO_3$

ABSTRACT: The authors point out that there is no basic principle forbidding the simultaneous appearance of ferroelectric and ferromagnetic ordering in the same crystal, and they discuss recent work, both their own and others', indicating the existence of such double ordering in some substances. Two of the authors have given a thermodynamic discussion of simultaneously ferromagnetic and ferroelectric materials (G.A.Smolenskiy, Fizika tverdogo tela,4,No.5,1055,1962; A.I.Mitsek and G.A.Smolenskiy,Ibid.No.12,3581,1962). These substances are characterized by a combined electromagnetic susceptibility tensor relating both the polarization and the magne-

Card 1/3

APPROVED FOR RELEASE: 06/23/11: CIA-RDP86-00513R001134700006-6

APPROVED FOR RELEASE: 06/23/11: CIA-RDP86-00513R001134700006-6

ACCESSION NR: AP4023383

cal cubic antiferromagnetics. The experimental results thus support the hypothesis that the investigated alloys possess both ferromagnetic and antiferromagnetic states. Orig. art. has: 14 formulas and 3 figures.

ASSOCIATION: Institut fiziki metallov Akademii nauk SSSR (Institute of Physics of Metals, Academy of Sciences, SSSR); Ural'skiy gosudarstvennyy universitet (Ural State University)

SUBMITTED:	00	DATE ACQ:	10Apr64	ENCL:	00
SUB CODE:	PH	NO REF SOV:	005	OTHER:	003

Card 3/3

APPROVED FOR RELEASE: 06/23/11: CIA-RDP86-00513R001134700006-6

APPROVED FOR RELEASE: 06/23/11: CIA-RDP86-00513R001134700006-6

ACCESSION NR: AP4023383

axial system of this sort (K.B.Vlasov and A.I.Mitsek, Fizika metallov i metallovedeniye,14,487,498,1962). In the present paper the theoretical treatment is extended to systems with cubic symmetry. UA is possible when the coupling between the antiferromagnetic vector and the crystal lattice is stronger than the coupling between the ferromagnetic and antiferromagnetic subsystems. The states with UA are metastable and can be altered by application of a magnetic field exceeding the threshold field of the antiferromagnetic subsystem. UA was observed in disordered Ni-Mn alloys (28.1 atomic percent Mn) at temperatures below 20.4°K. The magnetization was investigated in the [111] direction, and the UA was evinced by a characteristic bend in the magnetization curve or by a horizontal shift of the hysteresis loop. Samples that were cooled in the presence of a magnetic field showed UA; those that were cooled in the zero field did not. The samples were subjected to an intense pulsed magnetic field (up to 170 kOe) in an effort to alter their UA. At 4.2°K a field of 10 kOe appreciably altered the UA of a sample that had been cooled in a field of 1300 Oe, and a field of 130 kOe changed its sign. A sample that was cooled in the absence of a magnetic field and initially showed no UA, acquired UA when subjected to magnetic fields greater than 60 kOe. The degree of UA (as measured by the shift of the hysteresis loop) was a linear function of the field for inducing fields greater than 60 kOe. These fields are of the order of the threshold fields for typi-

Card 2/3

APPROVED FOR RELEASE: 06/23/11: CIA-RDP86-00513R001134700006-6

APPROVED FOR RELEASE: 06/23/11: CIA-RDP86-00513R001134700006-6

ACCESSION NR: AP4023383 S/0048/64/028/003/0423/0429

AUTHOR: Vlasov,K.B.; Volkenshteyn,N.V.; Vonsovskiy,S.V.; Mitsek,A.I.; Turchinskaya, M.I.

TITLE: Unidirectional anisotropy [Report, Symposium on Ferromagnetism and Ferroelectricity held in Leningrad 30 May to 5 June 1963]

SOURCE: AN SSSR. Izvestiya fizicheskaya, v.28, no.3, 1964, 423-429

TOPIC TAGS: ferromagnetism, antiferromagnetism, cubic lattice ferromagnets, unidirectional anisotropy, nickel manganese alloy

ABSTRACT: A substance is said to possess unidirectional anisotropy (UA) when its magnetic properties differ in the two directions of the same crystallographic axis. This phenomenon was first observed by W.H.Mejklejohn and C.P.Bean (Phys.Rev.,105, 904,1956), who ascribed its appearance in their material to an exchange interaction across the boundaries between ferromagnetic and antiferromagnetic phases. Two of the present authors have suggested that UA could appear in a single ferromagnetic substance provided a weakly interacting sub-lattice constituting an antiferromagnetic subsystem were present, and they have given a thermodynamic discussion of a uni-

Card 1/3

APPROVED FOR RELEASE: 06/23/11: CIA-RDP86-00513R001134700006-6

APPROVED FOR RELEASE: 06/23/11: CIA-RDP86-00513R001134700006-6

ACCESSION NR: AP4011758

or in cubic crystals of the classes T and T_h. Piezomagnetism may probably be observed in ferrimagnetics as well but only against a "zero background," at the point of compensation (if there is one). Actually the effect will appear on one side of the point of compensation or the other when elastic stresses are applied to the sample. The authors computed the temperature dependence of a piezomagnetic model and the spectra of spin waves, taking into account the elastic stresses, for the antiferromagnetic crystals MnF_2 and CoF_2. "We express our deep thanks to Ye. A. Turov for his constant interest in the work and for his valuable discussions, and we thank S. V. Vonsovskiy for discussing some of the results." Orig. art. has: 3 tables and 29 formulas.

ASSOCIATION: Institut fiziki metallov AN SSSR, Sverdlovsk (Institute of the Physics of Metals AN SSSR)

SUBMITTED: 26Jul63 DATE ACQ: 14Feb64 ENCL: 00

SUB CODE: PH NO REF SOV: 018 OTHER: 007

Card 2/2

APPROVED FOR RELEASE: 06/23/11: CIA-RDP86-00513R001134700006-6

APPROVED FOR RELEASE: 06/23/11: CIA-RDP86-00513R001134700006-6

ACCESSION NR: AP4011758 S/0181/64/006/001/0210/0218

AUTHORS: Mitsek, A. I.; Shavrov, V. G.

TITLE: Piezomagnetism in antiferromagnetics and ferrimagnetics

SOURCE: Fizika tverdogo tela, v. 6, no. 1, 1964, 210-218

TOPIC TAGS: piezomagnetism, antiferromagnetic, ferrimagnetic, sublattice, magnetic crystal, compensation point, piezomagnetic coefficient, antiferromagnetic structure, ferromagnetic structure, spin wave, spin wave spectrum

ABSTRACT: The authors have investigated the piezomagnetic effect in magnetic crystals having two sublattices. They have examined the symmetry of crystals that permit piezomagnetism and have computed the tensors of piezomagnetic coefficients for all types of antiferromagnetic structures. Piezomagnetism can be observed only in antiferromagnetics the structure of which permits the existence of weak ferromagnetism. If the antiferromagnetic is found in a state in which the weak ferromagnetic moment is absent, then piezomagnetism can be observed against a "zero background." When a weak ferromagnetic moment is present, the piezomagnetic effect supplies an additional field that may be distinguished (in principle). Thus, like weak ferromagnetism, the piezomagnetic effect is impossible in triclinic crystals

Card 1/2

APPROVED FOR RELEASE: 06/23/11: CIA-RDP86-00513R001134700006-6

APPROVED FOR RELEASE: 06/23/11: CIA-RDP86-00513R001134700006-6

ACCESSION NR: AP4000619

where K - constant in magnetic crystallographic anisotropy, α - direction cosine, $K < 0$, $H = 0$, $\alpha_i^2 = 1/3$ and $K > 0$, $H = 0$, $\alpha_1^2 = \alpha_2^2 = 1/2$, $\alpha_3 = 0$. It is shown that the magnetostriction deformation dependence on the direction of H in the domain below the antiferromagnetic field threshold is determined to a significant extent by the direction vector of antiferromagnetism. Some experimental results of magnetostriction properties of CoF_2 and MnF_2 peizomagnetics have been presented. "The author is grateful to Ye. A. Turov, K. B. Vlasov, and R. Z. Levitin for their help." Orig. art. has: 36 equations.

ASSOCIATION: Ural'skiy gosuniversitet im. A. M. Gor'kogo (Ural State University)

SUBMITTED: 11Feb63 DATE ACQ: 27Nov63 ENCL: 00

SUB CODE: PH NO REF SOV: 005 OTHER: 004

Card 2/2

APPROVED FOR RELEASE: 06/23/11: CIA-RDP86-00513R001134700006-6

APPROVED FOR RELEASE: 06/23/11: CIA-RDP86-00513R001134700006-6

ACCESSION NR: AP4000619 S/0126/63/016/004/0501/0508

AUTHOR: Mitsek, A. I.

TITLE: Thermodynamic theory of the magnetostriction properties of antiferromagnetics. 2. Cubic ferromagnetics, piezomagnetics

SOURCE: Fizika metallov i metallovedeniye, v. 16, no. 4, 1963, 501-508

TOPIC TAGS: magnetostriction property, thermodynamic theory, antiferromagnetic magnetostriction, dynamics, antiferromagnetic property, ferromagnetic, cubic ferromagnetic, piezomagnetic single domain, single domain cubic antiferromagnetic, cubic antiferromagnetic, magnetostriction, deformation, threshold antiferromagnetic field, antiferromagnetic vector, cobalt fluoride, manganese fluoride, cobalt, manganese, flouride, thermodynamic potential, compressibility coefficient, Young modulus, antiferromagnetic, piezomagnetic property

ABSTRACT: The magnetostriction properties of single domain cubical antiferromagnetics have been studied. Expressions are derived relating the magnetostriction deformation to the external field H in all regions of temperature existing in the antiferromagnetic state. Three cases are considered in detail $K > 0$, $H = 0$, $\alpha_3 = 1$

Card 1/2

APPROVED FOR RELEASE: 06/23/11: CIA-RDP86-00513R001134700006-6

APPROVED FOR RELEASE: 06/23/11: CIA-RDP86-00513R001134700006-6

MITSEK, A.I.

Thermodynamic theory of magnetically elastic properties of antiferromagnetic materials. Part 1. Uniaxial antiferromagnetic material. Fiz. met. i metalloved. 16 no.2:168-178 Ag '63. (MIRA 16:8)

1. Ural'skiy gosudarstvennyy universitet im. A.M. Gor'kogo. (Ferromagnetism)

APPROVED FOR RELEASE: 06/23/11: CIA-RDP86-00513R001134700006-6

APPROVED FOR RELEASE: 06/23/11: CIA-RDP86-00513R001134700006-6

L 18021-63

ACCESSION NR: AP3003872

4

expansion) and directly (because of magnetoelastic interaction). He obtained a positive contribution of thermal expansion to anisotropy in Co, amounting to $\sim 2 \cdot 10^5$ erg/cm^3, but concludes this cannot be used to explain the actual process because of insufficient data on some of the parameters. For Ni, he obtained negative contribution but did not compute a numerical value because of unreliable experimental data. For iron he computed a value of $\sim 10^5$ erg/cm^3. He concludes that the direct effect of thermal expansion cannot explain the deviations in magnetic crystallographic anisotropy from the formula given by the spin-wave theory. But the effect of thermal expansion is considerable and may be calculated completely by more precise measurements of the magnetostriction constants and the coefficients of thermal expansion in the required temperature interval. "I express my deep thanks to Yu. P. Irkhin for constant interest in the work and for discussions of the results, and also to S. V. Vonsovskiy for his valuable discussions." Orig. art. has: 22 formulas.

ASSOCIATION: Ural'skiy gosudarstvennyy universitet, Sverdlovsk (Ural State University)

SUBMITTED: 28Jan63 DATE ACQ: 15Aug63 ENCL: 00

SUB CODE: PH NO REF SOV: 012 OTHER: 010

Card 2/2

APPROVED FOR RELEASE: 06/23/11: CIA-RDP86-00513R001134700006-6

APPROVED FOR RELEASE: 06/23/11: CIA-RDP86-00513R001134700006-6

L 18025-63 EWT(1)/EWP(q)/EWT(m)/BDS/ES(s)-2 AFFTC/ASD/SSD/IJP(C)
Pad/Pt-4 JD/WB
ACCESSION NR: AP3003872 S/0181/63/005/007/1800/1804

69
65

AUTHOR: Mitsek, A. I.

TITLE: Effect of thermal expansion on the temperature dependence of the constants of magnetic crystallographic anisotropy in ferromagnetic substances

SOURCE: Fizika tverdogo tela, v. 5, no. 7, 1963, 1800-1804

TOPIC TAGS: thermal expansion, temperature, anisotropy, magnetic crystallographic anisotropy, ferromagnetism, Fe, Co, Ni, magnetoelastic interaction, magnetostriction, spin wave, spin orbit interaction, electron, lattice, iron, cobalt, nickel

ABSTRACT: In this theoretical discussion the author considers the indicated dependence to be incapable of explanation by taking into account only the expansion of a further magnetic order during elevation of temperature (as is done in models of spin waves). He finds it necessary to consider the possible change in electron structure during temperature rise, which may produce change in the parameters of spin-orbit interaction, and this may have a consequent effect on the magnetic anisotropy. He also considers change in the state of the lattice, since this will also affect the anisotropy indirectly (through change in the lattice during heat

Card 1/2

APPROVED FOR RELEASE: 06/23/11: CIA-RDP86-00513R001134700006-6

APPROVED FOR RELEASE: 06/23/11: CIA-RDP86-00513R001134700006-6

On the thermodynamic theory S/126/62/014/004/003/017
E032/E314

ASSOCIATIONS: Institute fiziki metallov AN SSSR
(Institute of Physics of Metals of the AS USSR)
Ural'skiy gosudarstvennyy universitet im.
A.M. Gor'kogo
(Ural State University im. A.M. Gor'kiy)

SUBMITTED: April 19, 1962

Card 3/3

APPROVED FOR RELEASE: 06/23/11: CIA-RDP86-00513R001134700006-6

APPROVED FOR RELEASE: 06/23/11: CIA-RDP86-00513R001134700006-6

is a single transition point Θ. Two special cases are considered, namely, $\Theta_C \gg \Theta_N$ and $\Theta_C \ll \Theta_N$. In the first of these, it is shown that when the interaction between the sub-systems is taken into account, then provided it is small, it is found that 1) is has no effect on the temperature-dependence of the spontaneous magnetization and the susceptibility, 2) when $M \neq 0$, antiferromagnetic order will appear and 3) the phase-transition temperature Θ will increase. It is shown in the second of the above two cases that: a) when the temperature is less than or equal to Θ weak ferromagnetism appears in addition to the antiferromagnetic ordering; b) the form of the temperature-dependence of the antiferromagnetic-order parameter ℓ is not affected when the interaction between the sub-systems is taken into account in the form of Eq. (1.4) of the previous paper and c) the phase-transition temperature is increased and the character of the transition changes from the antiferromagnetic type to the ferromagnetic type. The paper is concluded with a review of the general implications of the theory with regard to the form of the magnetization curves.

APPROVED FOR RELEASE: 06/23/11: CIA-RDP86-00513R001134700006-6

APPROVED FOR RELEASE: 06/23/11: CIA-RDP86-00513R001134700006-6

42247

S/126/62/014/004/003/017
E032/E314

24.2200

AUTHORS: Vlasov, K.B. and Mitsek, A.I.

TITLE: On the thermodynamic theory of the existence of ferromagnetism and antiferromagnetism in matter.
II. Temperature-dependence of parameters determining the magnetic state and the form of the magnetization curve [1]

PERIODICAL: Fizika metallov i metallovedeniye, v. 14, no. 4, 1962, 498 - 502

TEXT: The theory developed by the present authors in the previous paper (FMM, 1962, v.14, no. 4, 486) is used to discuss the temperature-dependence of quantities determining the form of the magnetization curves at points which would be the phase-transition points if the ferro-and antiferromagnetic sub-systems were isolated, i.e. the Curie point Θ_C for the ferromagnetic sub-system and the Neel point Θ_M for the antiferromagnetic sub-system. An interaction of the form given by Eq. (1.4) of the preceding paper (c.f. preceding abstract) ensures that there

Card 1/3 [1] Ref S/126/62/014/004/003/017 for Part I

APPROVED FOR RELEASE: 06/23/11: CIA-RDP86-00513R001134700006-6

APPROVED FOR RELEASE: 06/23/11: CIA-RDP86-00513R001134700006-6

domain are discussed. The properties of the domain structure and displacement of domain boundaries are also analysed. In the case of a magnetically uniaxial crystal with domain structure in the initial state and $q < 1$, the displacement of the boundaries is inhibited and when the field is parallel to the anisotropy axis the displacement begins only at fields of the order of H_s, where

$$H_s = H_{s0}/(1 - q^2); \quad H_{s0} = (C/M_s) \qquad (2.5).$$

For other orientations of the field the displacement of boundaries should begin at even higher fields. Rotation processes should appear at fields of the order of H_s and parallel to the anisotropy axis. They also occur at much smaller fields for other orientations. There are 2 figures.

ASSOCIATION: Institut fiziki metallov (Institute of Physics of Metals)
Ural'skiy gosudarstvennyy universitet im. A.M. Gor'kogo (Ural State University im. A.M. Gor'kiy)

SUBMITTED: April 19, 1962

APPROVED FOR RELEASE: 06/23/11: CIA-RDP86-00513R001134700006-6

APPROVED FOR RELEASE: 06/23/11: CIA-RDP86-00513R001134700006-6

and therefore only special cases are considered in this paper. The analysis of special cases is based on the following expression for the thermodynamic potential

$$\Phi = \Phi_o + B\cos^2\eta + B'\cos^2\psi - C\cos(\psi - \eta) - M_s H\cos(\eta - \omega) - \frac{1}{2}\left\{\chi_{\parallel}\cos^2(\psi - \omega) + \chi_{\perp}\sin^2(\psi - \omega)\right\} \quad (2.1)$$

where $\chi_{\perp}$ and $\chi_{\parallel}$ are the two susceptibilities of the antiferromagnetic sub-system and η, ψ and ω are the angles of $\underline{M}$, $\underline{l}$ and $\underline{H}$ with the z-axis. The equilibrium values of η and ψ are determined from the condition that Φ should be a minimum and it is then found that the solutions may be divided into two classes, namely, $q < 1$ and $q > 1$, where $q = C/2|B'|$. The analysis applies both to uniform and nonuniform (domain structure) distribution of the parameters characterizing the degree of magnetic order. Processes involving the rotation of the spontaneous magnetization vector and the antiferromagnetic vector $\underline{l}$ in each

APPROVED FOR RELEASE: 06/23/11: CIA-RDP86-00513R001134700006-6

APPROVED FOR RELEASE: 06/23/11: CIA-RDP86-00513R001134700006-6

where $\underline{M}$ is the magnetization of the ferromagnetic sub-system

$$\underline{m} = \underline{M}_1 + \underline{M}_2; \quad \underline{l} = \underline{M}_1 - \underline{M}_2$$

and $F(\underline{r})$ is the sum of 1) the increase in the free exchange energy due to the perturbation, 2) the free energy of irregularities and 3) the crystallographic free energy of magnetic anisotropy. The present theory is more general than that of Meiklejohn and Bean (Phys. Rev., 1957, 105, 904) because in the expression for the exchange energy of ineteraction between the sub-systems

$$E_{B3} = -(2M_s M_o)^{-1}\left\{C(\underline{Ml}) - D(\underline{mM})\right\} \qquad (1.4)$$

where M_s is the spontaneous magnetization, it is not assumed that $D = -C$. The general problem is therefore to vary the thermodynamic potential in order to find the equilibrium values of $\underline{M}$, $\underline{l}$ and $\underline{m}$ for each value of $\underline{H}$ and thereby obtain the magnetization curve. In general, the problem is rather difficult

APPROVED FOR RELEASE: 06/23/11: CIA-RDP86-00513R001134700006-6

APPROVED FOR RELEASE: 06/23/11: CIA-RDP86-00513R001134700006-6

matrix. A thermodynamic theory is now developed for the description of these phenomena. It is assumed that the magnetic material can be regarded, on the zero-order approximation, as a combination of a ferromagnetic (or ferrimagnetic) and antiferromagnetic sub-system. Large exchange interactions within each sub-system give rise to the ordering of the magnetic moments. The exchange and magnetic interactions between the sub-systems, the magnetic interaction within each system, the interaction of each sub-system with the external magnetic field and the possible resulting nonuniformity of the magnetic moments are looked upon as perturbations. The analysis is confined to the case where antiferromagnetic sub-systems may be regarded as consisting of two magnetic sub-lattices with magnetizations $\underline{M}_1$ and $\underline{M}_2$ $(|\underline{M}_1| = |\underline{M}_2| = \underline{M}_o)$. The thermodynamic potential due to the departure from the zero-order state is then given by:

$$\underline{\Phi} = \frac{1}{V}\int \underline{\Phi}(\underline{r})d\underline{r}; \quad \underline{\Phi}(r) = F(\underline{r}) - (\underline{M} + \underline{m})\underline{H} \qquad (1.1)$$

APPROVED FOR RELEASE: 06/23/11: CIA-RDP86-00513R001134700006-6

APPROVED FOR RELEASE: 06/23/11: CIA-RDP86-00513R001134700006-6

42216

S/126/62/014/004/002/017
E032/E314

AUTHORS: Vlasov, K.B. and Mitsek, A.I.

TITLE: On the thermodynamic theory of the existence of ferromagnetism and antiferromagnetism in matter. I. Magnetization processes

PERIODICAL: Fizika metallov i metallovedeniye, v. 14, no. 4, 1962, 487 - 497

TEXT: It has been suggested that the one-directional anisotropy observed in unordered Ni-Mn and Cu-Mn alloys can be explained by assuming the presence of ferro- and antiferromagnetic states. For Ni-Mn alloys, which approach the stoichiometric composition of Ni_3Mn, it has been assumed that the unordered (ferromagnetic) matrix contains regions enriched with Mn which are in the antiferromagnetic state [Kouvel and Graham, J.Phys. Chem.Sol., 1959, 11, No. 3-4, 220; Kouvel, J. Phys. Chem.Sol., 1961, 21, No. 1-2; Volkenshteyn and Turchinskaya, Doklad na Soveshchanii po nizkim temperaturam (Report on Conference on Low Temperatures], Kiev, 1961]. It is noted that it is not clear whether these regions are crystallographically separated from the

Card 1/5

APPROVED FOR RELEASE: 06/23/11: CIA-RDP86-00513R001134700006-6

APPROVED FOR RELEASE: 06/23/11: CIA-RDP86-00513R001134700006-6

with respect to M; $\tilde{A} = A + 4\varrho_2$, $\tilde{\gamma}_1 = \gamma_1 - 2\varrho_1\vec{P}_2$. The constants ϱ_i are combinations of the parameters L_j, q_k and of the elastic modulus c_{rs}. It is found that $m_\perp = 0.43\ m_o$ and $m_\parallel = 0.35\ m_o$.

ASSOCIATION: Institut poluprovodnikov AN SSSR, Leningrad (Institute of Semiconductors AS USSR, Leningrad)

SUBMITTED: July 11, 1962

APPROVED FOR RELEASE: 06/23/11: CIA-RDP86-00513R001134700006-6

APPROVED FOR RELEASE: 06/23/11: CIA-RDP86-00513R001134700006-6

relation between the tensors of the piezomoduli $d_{ij,k} = (\partial u_{ij}/\partial E_k)_{\vec{E}} \neq 0$ and the coefficients of the paraprocess of magnetostriction. Moreover photoelectromagnetic, thermoelectromagnetic and other new mixed static effects may occur in seignettoelectric ferroelectric materials; they are found to be analogs of the piezoelectromagnetic forces. With increasing deviation from the cubical symmetry, and neglecting other similar effects, the Landau theory of phase transitions of the second kind can be applied in the neighborhood of the magnetic Curie point Θ_{mag} and of the electric Curie point Θ_{el}. If $\Theta_{el} > \Theta_{mag}$ $(\Theta_{el} - \Theta_{mag} \sim \Theta_{el})$, the thermodynamic potential Φ in the vicinity of Θ_{mag} can be expanded in a series

$$\Phi = \Phi_0 + \frac{1}{2}[a + \eta_1(P^2)]\mathbf{M}^2 + \frac{1}{4}\bar{A}\mathbf{M}^4 + \frac{1}{4}\bar{B}\sum M_i^4 + \frac{1}{2}\eta_{\parallel}''\mathbf{P}^2\beta_i^2 M_i^2 + \frac{1}{2}\eta_3''P^2(\beta\mathbf{M})^2 - (\mathbf{MH}) - (\mathbf{PE}). \quad (4.1)$$

APPROVED FOR RELEASE: 06/23/11: CIA-RDP86-00513R001134700006-6

APPROVED FOR RELEASE: 06/23/11: CIA-RDP86-00513R001134700006-6

parameters of the magnetoelectric energy if (1.1) is not taken into account. The dielectric tensor is $\varepsilon_{ij} \sim 4\pi\chi_{ij}^{(ee)}$, where $\chi_{ij}^{(ee)} = -(\partial^2 \Phi/\partial E_i \partial E_j)$ are the components of the tensor of the dielectric susceptibility and Φ is the thermodynamic potential. $\chi_{ij}^{(mm)} = -(\partial^2 \Phi/\partial H_i \partial H_j)$ is the magnetic susceptibility and $\chi_{ij}^{(em)} = -\chi_{ji}^{(me)} = -(\partial^2 \Phi/\partial E_i \partial H_j)$ is the magnetoelectric susceptibility. The equation $(\partial P_i/\partial H_j) = (\partial M_j/\partial E_i)$ is valid. The susceptibility tensor of the third rank and of the third order can be written as tensor of the second rank and of the sixth order

$$\left\| \begin{matrix} \|\chi_{ij}^{(ee)}\| & \|\chi_{kl}^{(em)}\| \\ \|\chi_{lk}^{(me)}\| & \|\chi_{mn}^{(mm)}\| \end{matrix} \right\|$$

. The piezomagnetoelectric coefficients $\Pi_{ij,kl} = \partial \vec{u}_{ij}/\partial E_k \partial H_l = \partial d_{ij,k}/\partial H_l = \partial D_{ij,l}/\partial E_k$ express the

APPROVED FOR RELEASE: 06/23/11: CIA-RDP86-00513R001134700006-6

APPROVED FOR RELEASE: 06/23/11: CIA-RDP86-00513R001134700006-6

subsystems. Both types of energy occur when the external potentials σ_{ij} are applied. The free energies for the tetragonal, rhombohedral and orthorhombic phase, given by

$$F_A^{(1)} = F_{A0}^{(1)} + \frac{1}{4}\tilde{B}\alpha_i^2\alpha_i^2 + \frac{1}{2}(\tilde{\gamma}_2 + \tilde{\gamma}_3)\alpha_3^2, \qquad (2.4),$$

$$F_A^{(2)} = F_{A0}^{(2)} + \frac{1}{4}\tilde{B}\alpha_i^2\alpha_i^2 + \frac{1}{3}\tilde{\gamma}_3(\alpha_1\alpha_2 + \alpha_2\alpha_3 + \alpha_3\alpha_1), \qquad (2.5) \text{ and}$$

$$F_A^{(3)} = F_{A0}^{(3)} + \frac{1}{4}\tilde{B}\alpha_i^2\alpha_i^2 + \frac{1}{4}(\tilde{\gamma}_2 + \tilde{\gamma}_3)(\alpha_1^2 + \alpha_2^2) + \frac{1}{2}\tilde{\gamma}_3\alpha_1\alpha_2; \qquad (2.6),$$

are derived from the free energy of the crystallographic anisotropy, which is accurate to the fourth power of the direction cosines α_i of the magnetization and β_i of the electric polarization. γ_2 and γ_3 are the

APPROVED FOR RELEASE: 06/23/11: CIA-RDP86-00513R001134700006-6

APPROVED FOR RELEASE: 06/23/11: CIA-RDP86-00513R001134700006-6

$$\Phi_{e.y.} = q\mathbf{P}^2\Delta\omega + q_1 P_i^2 u_{ii} + \frac{1}{2} q_2 P_i P_j u_{ij}, \quad (i \neq j) \qquad (1.3),$$

the free magnetoelastic energy

$$\Phi_{m.y.} = L\mathbf{M}^2\Delta\omega + L_1 M_i^2 u_{ii} + \frac{1}{2} L_2 M_i M_j u_{ij}; \qquad (1.4)$$

and the energy $\Phi_\sigma = -K\sigma_{ii}u_{ii} - \mu\sigma_{ij}u_{ij}$ $(i > j)$ of the external potentials. $\Delta\omega = \sum u_{ii}$, $(i, j = x,y,z)$ denotes the change in volume. The dimensions of a seignetoelectric ferromagnetic body depend symmetrically on the electric polarization $\vec{P}$ and on the magnetization $\vec{M}$. The contributions made to the free energies of the ferromagnetic and ferroelectric subsystems, and to the magnetoelectric energy, are obtained by inserting the equilibrium deformations in (1.1). The magnetoelectric energy results from interaction between the magnetoelastic and the electroelastic energy of the lattice

APPROVED FOR RELEASE: 06/23/11: CIA-RDP86-00513R001134700006-6

APPROVED FOR RELEASE: 06/23/11: CIA-RDP86-00513R001134700006-6

S/181/62/004/012/033/052
B125/B102

AUTHORS: Mitsek, A. I., and Smolenskiy, G. A.

TITLE: The thermodynamic theory of seignettoelectric ferromagnetic materials

PERIODICAL: Fizika tverdogo tela, v. 4, no. 12, 1962, 3581-3592

TEXT: A theory of seignettoelectric ferromagnetic materials is established by generalizing the thermodynamic theories of ferromagnetism and ferroelectricity. The portion of the thermodynamic potential $\Phi_y = \Phi_{y \cdot y} + \Phi_{э \cdot y} + \Phi_{M \cdot y} + \Phi_{\sigma}$ (1.1) that depends on the equilibrium components of the deformation tensor u_{ij} is composed of the isotropic contribution

$$\Phi_{y.y.} = \frac{1}{2}\left(c_{11} - \frac{1}{2}c_{12}\right)u_{ii}u_{ii} + \frac{1}{4}c_{12}(\Delta u)^2 + \frac{1}{4}c_{44}u_{ij}u_{ij}, \quad (i \neq j) \qquad (1.2),$$

the free electroelastic energy

Card 1/6

APPROVED FOR RELEASE: 06/23/11: CIA-RDP86-00513R001134700006-6

APPROVED FOR RELEASE: 06/23/11: CIA-RDP86-00513R001134700006-6

85690

Temperature Dependence of Magnetostriction S/056/60/038/006/033/049/XX
B006/B070

moduli, the thermal lattice vibrations not being considered. Harmonic elastic lattice vibrations do not alter the equilibrium deformations of the crystal, and so do not affect the average magnetoelastic energy of the ferromagnetic. Anharmonic oscillations lead to thermal expansion, and can be added to the correction for temperature change of the magnetostriction deformations in first approximation. Thus, the temperature dependence of magnetostriction deformations is largely determined by the thermal vibrations of magnetization, that is, by spin waves. Thus, the problem set here can be reduced to a calculation of the energy spectrum of spin waves. It differs from the previous paper only in that the magnetoelastic energy is taken into consideration. S. V. Vonsovskiy is thanked for discussions and advice. There are 9 Soviet references.

ASSOCIATION: Institut fiziki metallov Akademii nauk SSSR (Institute of Metal Physics of the Academy of Sciences USSR)

SUBMITTED: January 9, 1960

Card 3/3

APPROVED FOR RELEASE: 06/23/11: CIA-RDP86-00513R001134700006-6

APPROVED FOR RELEASE: 06/23/11: CIA-RDP86-00513R001134700006-6

85690

Temperature Dependence of Magnetostriction S/056/60/038/006/033/049/XX
B006/B070

$\mathcal{L}_{me} = -A_{ls;n_1n_2n_3}\sigma_{ls}m_x^{n_1}\ m_y^{n_2}\ m_z^{n_3} - G_{ijls}\sigma_{ls}\frac{\partial m_t}{\partial T_i}\frac{\partial m_t}{\partial r_j}$, where $m_t(\vec{r})$ $= M_t(\vec{r})/M_0$ are the components of the unit vector of the local magnetization; M_0 - absolute saturation; $i,j,l,s,t \equiv x,y,z$; n_1, n_2, n_3 - whole numbers; $n_1+n_2+n_3 = 2N$ (an even number); summation is to be made over repeated subscripts. The first term gives the anisotropic part of magnetoelastic energy in the form of an expansion in a power series of the magnetization components; the second term gives the change in volume energy of the ferromagnetic, where $G_{ijls} = -\partial A_{ij}/\partial\sigma_{ls}$; A_{ij} are the volume exchange parameters. The explicit forms of the parameters A and G are determined by the crystal symmetry. The components of the elastic stress tensor σ_{is} can be considered parameters for the present problem; they are related to the equilibrium deformations through the elastic

Card 2/3

APPROVED FOR RELEASE: 06/23/11: CIA-RDP86-00513R001134700006-6

APPROVED FOR RELEASE: 06/23/11: CIA-RDP86-00513R001134700006-6

05090

S/056/60/038/006/033/049/XX
B006/B070

24.7900 (1035,1144,1160)

AUTHORS: Turov, Ye. A., Mitsek, A. I.

TITLE: Temperature Dependence of Magnetostriction

PERIODICAL: Zhurnal eksperimental'noy i teoreticheskoy fiziki, 1960, Vol. 38, No. 6, pp. 1847-1851

TEXT: A study is made of the temperature dependence of linear (anisotropic) and volume (isotropic) magnetostriction at low temperatures by using the phenomenological method of spin-wave theory. The present work is a continuation of Ref. 1 where the temperature dependence of the ferromagnetic anisotropy constant was investigated by the same authors on the basis of the phenomenological spin-wave theory. The results obtained there are used now to determine the temperature dependence of the constant of anisotropic magnetostriction. The theoretical considerations are based on a general formulation for the density of magnetoelastic energy of a ferromagnetic. In the first approximation, this formulation has the following form:

Card 1/3

APPROVED FOR RELEASE: 06/23/11: CIA-RDP86-00513R001134700006-6

APPROVED FOR RELEASE: 06/23/11: CIA-RDP86-00513R001134700006-6

PHASE I BOOK EXPLOITATION SOV/4893

Vsesoyuznoye soveshchaniye po fizike, fiziko-khimicheskim svoystvam ferritov i fizicheskim osnovam ikh primeneniya. 3d, Minsk, 1959

Ferrity; fizicheskiye i fiziko-khimicheskiye svoystva. Doklady (Ferrites; Physical and Physicochemical Properties. Reports) Minsk, Izd-vo AN BSSR, 1960. 655 p. Errata slip inserted. 4,000 copies printed.

Sponsoring Agencies: Nauchnyy sovet po magnetizmu AN SSSR. Otdel fiziki tverdogo tela i poluprovodnikov AN BSSR.

Editorial Board: Resp. Ed.: N. N. Sirota, Academician of the Academy of Sciences BSSR; K. P. Belov, Professor; Ye. I. Kondorskiy, Professor; K. M. Polivanov, Professor; N. V. Telesnin, Professor; G. A. Smolenskiy, Professor; N. N. Sholkite, Candidate of Physical and Mathematical Sciences; N. M. Smolyarenko; and L. A. Bashkirov; Ed. of Publishing House: S. Kholyavskiy; Tech. Ed.: I. Volokhanovich.

PURPOSE: This book is intended for physicists, physical chemists, radio electronics engineers, and technical personnel engaged in the production and use of ferromagnetic materials. It may also be used by students in advanced courses in radio electronics, physics, and physical chemistry.

COVERAGE: The book contains reports presented at the Third All-Union Conference on Ferrites held in Minsk, Belorussian SSR. The reports deal with magnetic transformations, electrical and galvanomagnetic properties of ferrites, studies of the growth of ferrite single crystals, problems in the chemical and physicochemical analysis of ferrites, studies of ferrites having rectangular hysteresis loops and multicomponent ferrite systems exhibiting spontaneous rectangularity, problems in magnetic attraction, highly coercive ferrites, magnetic spectroscopy, ferromagnetic resonance, magneto-optics, physical principles of using ferrite components in electrical circuits, anisotropy of electrical and magnetic properties, etc. The Committee on Magnetism, AS USSR (S. V. Vonsovskiy, Chairman) organized the conference. References accompany individual articles.

Akulov, N. S. Theory of the Rectangular Hysteresis Loop 23

Turov, Ye. A., and A. I. Mitsek. Theory of the Temperature Dependence of the Magnetic Anisotropy Constant of Ferromagnetics and Ferrites 28

Vlasov, B. V., and B. Kh. Iskhakhametov. Rotation of the Polarization Plane of Elastic Waves in Magnetically Polarized Magnetoelastic Media 41

Syrkin, L. N. Discussion of the [Preceding] Report 48

Sirota, N. N. The Physicochemical Nature of Ferrites and Their Properties 50

Sirota, N. N., E. A. Ovseychuk, and N. P. Tekhanovich. Some Peculiarities of the Magnetic Transformation of Ferrites at Curie Point 74

Belov, K. P., and R. Z. Levitin. Magnetoelastic Phenomena in Antiferromagnetics 78

Belov, K. P., V. P. Belov, A. V. Zalesskiy, and A. A. Popova. Magnetic and SHF Properties of Magnesium-Manganese Ferrite Single Crystals 83

Titova, A. G. Growing Ferrite Single Crystals With Structure of the Garnet Type 89

Card 4/18

APPROVED FOR RELEASE: 06/23/11: CIA-RDP86-00513R001134700006-6

APPROVED FOR RELEASE: 06/23/11: CIA-RDP86-00513R001134700006-6

TUROV, Ye.A.; MITSEK, A.I.

Temperature dependence of ferromagnetic anisotropy. Zhur.eksp. i teor.fiz. 37 no.4:1127-1132 O '59. (MIRA 13:1)

1. Institut fiziki metallov Akademii nauk SSSR.
(Ferromagnetism)

APPROVED FOR RELEASE: 06/23/11: CIA-RDP86-00513R001134700006-6

APPROVED FOR RELEASE: 06/23/11: CIA-RDP86-00513R001134700006-6

PISZCZAK, Stanislaw; MITSCHKE, Czeslaw

Psychological aspects of labor studies. Wiad naft 10 no. 1: 19-21 Ja '64.

APPROVED FOR RELEASE: 06/23/11: CIA-RDP86-00513R001134700006-6

APPROVED FOR RELEASE: 06/23/11: CIA-RDP86-00513R001134700006-6

PISZCZEK, Stanislaw; MITSCHKE, Czeslaw

Selected problems of industrial psychology. Wiad naft 9 no.7/8:179-181 Jl-Ag '63.

APPROVED FOR RELEASE: 06/23/11: CIA-RDP86-00513R001134700006-6

APPROVED FOR RELEASE: 06/23/11: CIA-RDP86-00513R001134700006-6

SCHNEIDER, P.; MITSCHKA, P.

Effect of internal diffusion on catalytic reactions. Pt.1.
Coll Cz Chem 30 no.1:146-157 Ja '65.

1. Institute of Chemical Process Fundamentals of the Czechoslovak Academy of Sciences, Prague. Submitted May 7, 1964.

APPROVED FOR RELEASE: 06/23/11: CIA-RDP86-00513R001134700006-6

APPROVED FOR RELEASE: 06/23/11: CIA-RDP86-00513R001134700006-6

SHNEIDER, P. [Schneider, P.]; ~~MICHKA, P.~~ [Mitschka, P.]

Determining the constants of Frost's kinetic compensation for catalytic reaction. Coll Cz Chem 27 no.2:458-461 F '62.

1. Institut teoreticheskikh osnov khimicheskikh protsessov Chekhoslovatskaya Akademiya nauk, Praga.

APPROVED FOR RELEASE: 06/23/11: CIA-RDP86-00513R001134700006-6

APPROVED FOR RELEASE: 06/23/11: CIA-RDP86-00513R001134700006-6

MITSCHKA, P.

Non-Newtonian liquids. Pt. 2. Coll Cz Chem 29 no.[illegible]
D '64.

1. Institut fur theoretische Grundlagen der chemischen Technik, Tschechoslowakische Akademie der Wissenschaften, Prague.

APPROVED FOR RELEASE: 06/23/11: CIA-RDP86-00513R001134700006-6

APPROVED FOR RELEASE: 06/23/11: CIA-RDP86-00513R001134700006-6

CZECHOSLOVAKIA

SCHNEIDER, P; KITSCHKA, P

Institute of Chemical Process Fundamentals, Czechoslovak Academy of Sciences, Prague-Suchdol - (for both)

Prague, Collection of Czechoslovak Chemical Communications, No 3, March 1966, pp 1205-1213

"Effect of internal diffusion on catalytic reactions. Part 3: Effect of particle shape on reaction with Langmuir-Hinshelwood type of kinetics."

APPROVED FOR RELEASE: 06/23/11: CIA-RDP86-00513R001134700006-6

APPROVED FOR RELEASE: 06/23/11: CIA-RDP86-00513R001134700006-6

MITSCHKA, P.; SCHNEIDER, P.

Determining the constants of speed leveling of heterogenous catalytic reactions. Coll Cz Chem 26 no.4:1195-1200 Ap '61.

1. Institut fur theoretische Grundlagen der chemischen Technik, Tschechoslowakische Akademie der Wissenschaften, Prag.

(Catalysis)

APPROVED FOR RELEASE: 06/23/11: CIA-RDP86-00513R001134700006-6

APPROVED FOR RELEASE: 06/23/11: CIA-RDP86-00513R001134700006-6

ILLEGIBLE

APPROVED FOR RELEASE: 06/23/11: CIA-RDP86-00513R001134700006-6

APPROVED FOR RELEASE: 06/23/11: CIA-RDP86-00513R001134700006-6

ILLEGIBLE

APPROVED FOR RELEASE: 06/23/11: CIA-RDP86-00513R001134700006-6

APPROVED FOR RELEASE: 06/23/11: CIA-RDP86-00513R001134700006-6

MITSAY, L.V.

Investigation of the spectra reflection of white oil paints.
Lakokras.mat.i ikh prim. no.3:55-57 '60. (MIRA 14:4)
(Paint—Spectra)

APPROVED FOR RELEASE: 06/23/11: CIA-RDP86-00513R001134700006-6

APPROVED FOR RELEASE: 06/23/11: CIA-RDP86-00513R001134700006-6

MITSAS, L.S., Cand Geog Sci -- (diss) "Relief of the umbelt ~~edge strip~~ of the last glacier. For example the basin of the Vil'ne River." Vil'nyus, 1958, 17 pp (Min of Higher Education USSR. Vil'nyus State Univ im V. Kapsukas) 100 copies (KL, 29-58, 129)

APPROVED FOR RELEASE: 06/23/11: CIA-RDP86-00513R001134700006-6

APPROVED FOR RELEASE: 06/23/11: CIA-RDP86-00513R001134700006-6

L 32152-66 RO

ACC NR: AT6023535 SOURCE CODE: HU/2505/65/027/002/0193/0197

AUTHOR: Fekete, Marton; Borsy, Jozsef--Borshi, Y.; Mitsanyi, Attila--Mitshan'i, A.

ORG: Research Institute for Pharmaceutical Chemistry, Budapest (Gyogyszerkutato Intezet); Experimental Research Department, Medical University of Budapest (Budapesti Orvostudomanyi Egyetem Kiserleti Kutatointezet)

24
B+1

TITLE: Coronary vasodilator effect of methophenazine and some other phenothiazine derivatives

SOURCE: Academia scientiarum hungaricae. Acta physiologica, v. 27, no. 2, 1965, 193-197

TOPIC TAGS: chlorpromazine, blood circulation, drug effect, nervous system drug

ABSTRACT: 1) Methophenazine was found to exert a more marked and prolonged coronary vasodilator effect on the Langendorf isolated heart preparation than does papaverine, chlorpromazine or perphenazine. 2) Methophenazine inhibits the vasopressin-induced elevation of the T-wave to the same extent as prenylamine. Chlorpromazine and perphenazine are less potent in this respect. 3) Myocardial blood flow was increased somewhat less, and muscle blood flow somewhat more by the tested phenothiazine derivatives than by papaverine. In both respects, methophenazine proved to be the most effective one among the phenothiazine derivatives tested. Orig. art. has: 3 figures. [Orig. art. in Eng.] [JPRS]

SUB CODE: 06 / SUBM DATE: 04Jun64 / ORIG REF: 002 / OTH REF: 011

Card 1/1 RB

0915 1498

APPROVED FOR RELEASE: 06/23/11: CIA-RDP86-00513R001134700006-6

APPROVED FOR RELEASE: 06/23/11: CIA-RDP86-00513R001134700006-6

L 15459-66

ACC NR: AT6007422

sponse to pre-treatment with the drug, the arterial blood pressure decreased and the myocardial blood flow increased. In the control shock group, the flow decreased significantly while vascular resistance only slightly, during the oligemic periods. In the animals pre-treated with phenoxybenzamine, the myocardial blood flow did not drop below the initial level in spite of the hypotension, while the resistance decreased markedly. The results led to some new conclusions as to the mechanism and therapy of hemorrhagic and cardiogenic shock. [JPRS]

SUB CODE: 06 / SUBM DATE: none

Card 2/2

APPROVED FOR RELEASE: 06/23/11: CIA-RDP86-00513R001134700006-6

APPROVED FOR RELEASE: 06/23/11: CIA-RDP86-00513R001134700006-6

L 15436-66 EWT(m)
ACC NR: AT6007422

SOURCE CODE: HU/2505/65/026/00X/0036/0036

AUTHOR: Mitsanyi, A.; Kovach, A. G. B.; Biro, Zsuzsanna

ORG: Experimental Research Laboratory, Medical University of Budapest (Budapesti Orvostudomanyi Egyetem, Kiserleti Kutatolaboratorium)

B+1 29 28

TITLE: Myocardial blood flow in hemorrhagic shock with and without phenoxybenzamine treatment as determined by the 'heated thermocouple' method [This paper was presented at the 29th Meeting of the Hungarian Physiological Society held in Szeged from 2 to 4 July 1964]

SOURCE: Academia scientiarum hungaricae. Acta physiologica, v. 26, Supplement, 1965, 36

TOPIC TAGS: circulatory system, blood pressure, drug effect, animal physiology

ABSTRACT: In recent years, increasing importance has again been attributed to cardiac lesions in the development of irreversible shock. In the present study, hemorrhagic shock was induced in dogs anesthetized with chloralose, and myocardial blood flow was studied by the method of HENGEL and RUEF, based on heat conductivity measurements. As phenoxybenzamine is known to have a protective effect, the studies were extended to animals pre-treated with the compound. It was found that, in re-

Card 1/2

APPROVED FOR RELEASE: 06/23/11: CIA-RDP86-00513R001134700006-6

APPROVED FOR RELEASE: 06/23/11: CIA-RDP86-00513R001134700006-6

YANINA, S.P.; MITSAK, V.F.

OP-10 foaming agent for synthetic glues. Der.prom. 9 no.2: 20-21 F '60. (MIRA 13:6)
(Glue) (Foam)

APPROVED FOR RELEASE: 06/23/11: CIA-RDP86-00513R001134700006-6

APPROVED FOR RELEASE: 06/23/11: CIA-RDP86-00513R001134700006-6

MITS, YE. G.

Nurses and Nursing

Experience of conducting nurses conferences on science and practice. Med. sestra No. 2, 1953.

SO: Monthly List of Russian Accessions, Library of Congress, June 1953, Uncl.

APPROVED FOR RELEASE: 06/23/11: CIA-RDP86-00513R001134700006-6

APPROVED FOR RELEASE: 06/23/11: CIA-RDP86-00513R001134700006-6

ZENIN, V.N.; MITS, V.N.

Electromagnetic radiation of industrial explosives during the blast. Vzryv. delo no.52/9:115-130 '63. (MIRA 17:12)

1. Makeyevskiy nauchno-issledovatel'skiy institut po bezopasnosti truda v gornoy promyshlennosti.

APPROVED FOR RELEASE: 06/23/11: CIA-RDP86-00513R001134700006-6

APPROVED FOR RELEASE: 06/23/11: CIA-RDP86-00513R001134700006-6

ZENIN, V.I.; MITS. V.N.

Electromagnetic radiation during the detonation of explosive charges. Vop. bezop. v ugol'. shakh. 13:265-279 '62. (MIRA 16:5)

(Electromagnetic waves) (Blasting)

APPROVED FOR RELEASE: 06/23/11: CIA-RDP86-00513R001134700006-6

APPROVED FOR RELEASE: 06/23/11: CIA-RDP86-00513R001134700006-6

MITS, V.N.; RES'YAN, A.K.; REDZIO, A.G.

Radiotelephone for mines. Trudy MakNII 14. Vop. gor. elektromekh. no.5:198-208 '62. (MIRA 16:6)
(Radiotelephone) (Mine communications)

APPROVED FOR RELEASE: 06/23/11: CIA-RDP86-00513R001134700006-6

APPROVED FOR RELEASE: 06/23/11: CIA-RDP86-00513R001134700006-6

MITS, V.N.

[redacted]

Experimental study of a magnetic recorder on mine steel hoisting cables. Trudy MakNII 14. Vop. gor. elektromekh. no.5:100-121 '62. (MIRA 16:6)

(Wire rope--Testing)
(Magnetic recorders and recording)

APPROVED FOR RELEASE: 06/23/11: CIA-RDP86-00513R001134700006-6

APPROVED FOR RELEASE: 06/23/11: CIA-RDP86-00513R001134700006-6

GORBATOV, S. P., inzh.; MITS, I. S., inzh.

Testing pile shells with vertical loading. Transpstroi 13 no. 11:45-47 N '63. (MIRA 17:5)

APPROVED FOR RELEASE: 06/23/11: CIA-RDP86-00513R001134700006-6

APPROVED FOR RELEASE: 06/23/11: CIA-RDP86-00513R001134700006-6

MITS, A.A., mladshiy nauchnyy sotrudnik

Age-related characteristics of the caterpillar of cotton bollworm. Zashch. rast. ot vred. i bol. 9 no.1:45-46 '64. (MIRA 17:4)

1. Institut zoologii i parazitologii AN UzSSR.

APPROVED FOR RELEASE: 06/23/11: CIA-RDP86-00513R001134700006-6

APPROVED FOR RELEASE: 06/23/11: CIA-RDP86-00513R001134700006-6

MITS, A.A.

Origin of the pattern of micropylar roseite on the chorion of owlet moths. (Lepidoptera, Noctuidae). Uzb.biol.zhur. 7 no.2: 45-48'63. (MIRA 16:8)

1. Institut zoologii i parazitologii AN UzSSR.
(OWLET MOTHS) (INSECTS--EGGS) (CHORION)

APPROVED FOR RELEASE: 06/23/11: CIA-RDP86-00513R001134700006-6

APPROVED FOR RELEASE: 06/23/11: CIA-RDP86-00513R001134700006-6

MITS, A.A:

"Transient Response in Band Amplifiers" Tr. Kharkovsk. Politekhn. In-ta. Seriya Elektroraditekhn, 3, No 1, 1954, 49-78

"Van der Pol method is applied to tests of transient response in n-cascaded detuned amplifier circuit. The derived equations hold also for the frequency converter. The stability of the amplifier under pulse distortion is called "antiparasitism" and is determined by the ratio of the stabilized amplitude of harmonic oscillations at the amplifier's output to the maxium voltage surge due to the constant emf coupled at the imput. The possible speed of the telegraphing is determined from the curves of voltage rise under action of the harmonic emf without consideration of the response to the disturbances. (RZhFiz, No 11, 1955)

APPROVED FOR RELEASE: 06/23/11: CIA-RDP86-00513R001134700006-6

APPROVED FOR RELEASE: 06/23/11: CIA-RDP86-00513R001134700006-6

1

USSR/Radio Waves - SHF
Wave Guides

Dec 1946

"Rectangular Wave Guides as Cut-off Wavemeters for Centimeter Waves," A. A. Mits, Candidate of Mechanical Sciences, N. S. Zinchenko, 5 pp

"Radiotekhnika" Vol I, No 9

The possibility of employing a rectangular wave guide as a wavemeter operating at cut-off wave length in the centimeter wave range is examined. The advantages of such a wavemeter against the types of existing wavemeters are demonstrated. Wave length measurements by means of such a wavemeter can be performed to within 10^{-5} sec, the measurement accuracy being independent of the wave length measured. An example of such a wavemeter setup is described.

20763

MITS, A. A.

APPROVED FOR RELEASE: 06/23/11: CIA-RDP86-00513R001134700006-6

APPROVED FOR RELEASE: 06/23/11: CIA-RDP86-00513R001134700006-6

MITRYUSHKIN, Konstantin Petrovich, kand.sel'skokhoz.nauk; ORLOV, Vasiliy Pavlovich, kand.sel'skokhoz.nauk; PYLAYEVA, A.P., red.; BALLOD, A.I., tekhn.red.

[In the struggle to increase agricultural production] V bor'be za pod"em sel'skogo khoziaistva. Moskva, Gos.izd-vo sel'khoz. lit-ry, 1959. 232 p. (MIRA 12:12)
(Agriculture)

APPROVED FOR RELEASE: 06/23/11: CIA-RDP86-00513R001134700006-6

APPROVED FOR RELEASE: 06/23/11: CIA-RDP86-00513R001134700006-6

MITRIUSHKIN, A., starshiy leytenant

Visiting our companions in arms. Komm.Vooruzh.Sil 2 no.13: 78-80 Jl '62. (MIRA 15:7)

(Bulgaria--Armed forces--Political activity)

APPROVED FOR RELEASE: 06/23/11: CIA-RDP86-00513R001134700006-6

APPROVED FOR RELEASE: 06/23/11: CIA-RDP86-00513R001134700006-6

1. MITEYUKOVSKIY, V. M. ; ENG.; LYAPIN, P. K., ENG.

2. USSR (600)

4. Dynamos

7. Automatic starting of a reserve hydro-generator at lowered frequency. Elek. sta. 23. No. 9. 1952.

9. Monthly List of Russian Accessions, Library of Congress, January 1953. Unclassified.

APPROVED FOR RELEASE: 06/23/11: CIA-RDP86-00513R001134700006-6

APPROVED FOR RELEASE: 06/23/11: CIA-RDP86-00513R001134700006-6

MITRYUKOVSKIY, V. M.

USSR/Metals
Steel Ingots
Metallurgy, Ferrous

Oct 48

"Influence of Gas Evolution on the Formation of a 6.5-Ton Ingot From Boiling Steel," Docent A. A. Bezdenezhnykh, V. F. Agapov, A. M. Bigeyev, I. A. Tkachenko, V. M. Mitryukovskiy, A. L. Kushnarev, Engineers, Magnitogorsk Mining Metal Inst, 7 pp

"Stal'" No 10

Use of new method for collecting gases evolved from a solidifying boiling steel ingot (under positive pressure) indicated inaccuracy of vast majority of results of foreign researchers, who worked with a vacuum and extracted gases from metal and settling simultaneously, using containers for taking samples. Main constituent of gases evolved is carbon monoxide (90%), not hydrogen. Vigorous boiling of the metal in the mold causes vertical circulation, which improves ingot structure. Manganese has considerable effect on rate of gas evolution. When content exceeds 0.40%, amount of gas decreases and ingot structure deteriorates.

PA 19/49T78

APPROVED FOR RELEASE: 06/23/11: CIA-RDP86-00513R001134700006-6

APPROVED FOR RELEASE: 06/23/11: CIA-RDP86-00513R001134700006-6

MITRYUKOVSKIY, V.I., inzhener; PESOCHIN, M.I., inzhener.

Automatic switching-in of stand-by hydrogenerators. Elek.sta. 27 no.1:28-29 Ja '56. (MLRA 9:6)
(Electric generators)

APPROVED FOR RELEASE: 06/23/11: CIA-RDP86-00513R001134700006-6

APPROVED FOR RELEASE: 06/23/11: CIA-RDP86-00513R001134700006-6

MITRYUKOVA, M.S.

USSR / Zooparasitology. Acarina and Insects. Vectors of Pathogenic Agents. Insects. G

Abs Jour: Ref Zhur-Biol., No 6, 1959, 24302.

Author : Shura-Bura, B. L., Shaykov, A. D., Ivanova, Ye. V., Glazunova, A. Ya., Mitryukova, M. S., Fedorova, E. G.

Inst : Not given.

Title : On the Character of Spreading of Some Species of Synanthropic Flies from the Point of Release.

Orig Pub: Entomol. obozreniye, 1958, 37, No 2, 336-345.

Abstract: The point where flies were released was in a little populated area 0.5 km from the main highway, 4-5 km to the east and west from the towns of Pushkin and Kolpino, 15 km. to the south of the Leningrad suburbs. For the experiment, about 85 thousand flies were prepared. 24 hours

Card 1/3

44

Abstract: before the experiment, the flies received no food. For three hours before being freed, the flies were fed a fermenting solution of sugar, and rotted meat filling to which a solution of radioactive sodium phosphate was added. Catching of the flies was conducted from 1-15 km from the point of freeing, at 45 points by net traps, and at 5 by fly paper. Maximum distance of flight (in km): Muscina stabulans and Hydrotaea dentipes 15, Protophormia terrae-novae and Musca domestica 10.7, Calliphora erythrocephala 8.6, Lucilia caesar 6.2, C. erythrocephala 5, Muscina assimilis and Fannia canicularis 4.5. Maximum speed of migration was within the limits of 4 km of unpopulated area. The average speed of flies here reaches, in a majority of the species, 1 km per

Card 2/3

Abstract: hour. Full dispersion of flies took place after 3 days. Migration went on with stops in unpopulated areas. P. terrae-novae, M. domestica, M. stabulans and others migrated long distances through marshes and waste lands. The direction went mostly toward animal breeding sovkhozes, subsidiary farm barnyards, to yards of food establishments which were in unsanitary conditions, groceries and houses. The main direction of the migration was toward Leningrad. -- A. P. Adrianov.

Card 3/3

45

APPROVED FOR RELEASE: 06/23/11: CIA-RDP86-00513R001134700006-6

APPROVED FOR RELEASE: 06/23/11: CIA-RDP86-00513R001134700006-6

MITRYUKOVA, M. S.

SHURA-BURA, B.L.; SHAYKOV, A.D.; IVANOVA, Ye.V.; GLAZUNOVA, A.Ya.,
MITRYUKOVA, M.S.; FEDOROVA, K.G.

Migration of synanthropic flies to the cities from open fields.
Med.paraz. i paraz. bol. 25 no.4:368-372 O-D '56. (MLRA 10:1)

1. Iz kafedry voyennoy epidemiologii voyenno-morskogo fakul'teta pri
I Leningradskom meditsinskom institute imeni akademika I.P.Pavlova
i Leningradskoy gorodskoy dezinfektsionnoy stantsii.
(FLIES,
migration to cities (Rus))

APPROVED FOR RELEASE: 06/23/11: CIA-RDP86-00513R001134700006-6

APPROVED FOR RELEASE: 06/23/11: CIA-RDP86-00513R001134700006-6

MITRYNOWICZ-MODRZEJEWSKA, Aleksandra; PAWLOWSKI, Zygmunt.

New methods for hearing tests in children and a critical evaluation of tone audiometry. Otolaryng. pol. 17 no.4:361-364 '63.

1. Z Oddziału Foniatrycznego Kliniki Otolaryngologicznej AM w Warszawie. Kierownik Oddziału: prof. dr. A. Mitrynowicz-Modrzejewska.

APPROVED FOR RELEASE: 06/23/11: CIA-RDP86-00513R001134700006-6

APPROVED FOR RELEASE: 06/23/11: CIA-RDP86-00513R001134700006-6

MITRYNOWICZ-MODRZEJEWSKA, Aleksandra

Post-traumatic vocal disorders and phoniatric rehabilitation.
Otolaryng. pol. 16 no.3:563-569 '62.

1. Z Oddzialu Foniatrycznego Kliniki Otolaryngologicznej AM w Warszawie
Dyrektor Kliniki: prof. dr J. Szymanski.
(SPEECH DISORDERS) (VOCAL CORDS)

APPROVED FOR RELEASE: 06/23/11: CIA-RDP86-00513R001134700006-6

APPROVED FOR RELEASE: 06/23/11: CIA-RDP86-00513R001134700006-6

MITRYAYEVA, N.M.

Reviews and discussions. Izv. AN Kazakh. SSR. Ser. geol. 22 no.1: 90-92 Ja-F '65. (MIRA 18:6)

1. Institut geologicheskikh nauk im. K.I. Satpayeva, g. Alma-Ata.

APPROVED FOR RELEASE: 06/23/11: CIA-RDP86-00513R001134700006-6

APPROVED FOR RELEASE: 06/23/11: CIA-RDP86-00513R001134700006-6

MITRYAYEVA, N.M.; MURATOVA, D.N.

Jordanite in the ores of the Bestyube deposit (central Kazakhstan).
Trudy Inst.geol.nauk AN Kazakh.SSR [illegible]. (MIRA 17:9)

APPROVED FOR RELEASE: 06/23/11: CIA-RDP86-00513R001134700006-6

APPROVED FOR RELEASE: 06/23/11: CIA-RDP86-00513R001134700006-6

MITRYAYEVA, N.M.; LI, V.G.

Manifestation of primary zoning in the Uzunzhal deposit. Trudy Inst.geol.nauk AN Kazakh.SSR 6:108-115 '62. (MIRA 16:6)
(Kazakhstan—Ore deposits)

APPROVED FOR RELEASE: 06/23/11: CIA-RDP86-00513R001134700006-6

APPROVED FOR RELEASE: 06/23/11: CIA-RDP86-00513R001134700006-6

MITRYAYEVA, N.M.; ROZHNOV, A.A.; SHCHERBA, G.N.

Genesis of complex metal ores of the Atasu region (central Kazakhstan). Izv. AN Kazakh.SSR. Ser.geol. no.6:53-64 '62. (MIRA 16:5)

(Atasu region—Ore deposits)

APPROVED FOR RELEASE: 06/23/11: CIA-RDP86-00513R001134700006-6

APPROVED FOR RELEASE: 06/23/11: CIA-RDP86-00513R001134700006-6

MITRYAYEVA, N.M.

Geocronite in the ores of the Uzunzhal deposit in central Kazakhstan. Izv. AN Kazakh.SSR. Ser.geol. no.4:97-103 '61. (MIRA 15:3)

(Kazakhstan--Geocronite)

APPROVED FOR RELEASE: 06/23/11: CIA-RDP86-00513R001134700006-6

APPROVED FOR RELEASE: 06/23/11: CIA-RDP86-00513R001134700006-6

KOZLOVSKAYA, Z.A.; MITRYAYEVA, N.M.

Rhenium in some copper-porphyritic deposits of central Kazakhstan. Izv. AN SSR. Ser. geol. no.1:95-99 '61. (MIRA 14:6)
(Kazakhstan—Rhenium)

APPROVED FOR RELEASE: 06/23/11: CIA-RDP86-00513R001134700006-6

APPROVED FOR RELEASE: 06/23/11: CIA-RDP86-00513R001134700006-6

IVANKIN, P.F.; MITRYAYEVA, N.M.; PURKINA, Z.A.

Types of ores and stages in the ore formation in the Novoberezovskoye deposit. Trudy Alt.GMNII AN Kazakh.SSR 8:146-169 '60. (MIRA 13:7)
(Altai Mountains--Sulfides)

APPROVED FOR RELEASE: 06/23/11: CIA-RDP86-00513R001134700006-6

APPROVED FOR RELEASE: 06/23/11: CIA-RDP86-00513R001134700006-6

KUCHANSKAYA, O.F., MITRYAYEVA, N.M.

New minerals in ores of the Dzhezkazgan deposit. Izv. AN Kazakh. SSR. Ser. geol. no.2:46-53 '60. (MIRA 13:8)
(Dzhezkazgan region--Minerals)

APPROVED FOR RELEASE: 06/23/11: CIA-RDP86-00513R001134700006-6

APPROVED FOR RELEASE: 06/23/11: CIA-RDP86-00513R001134700006-6

SATPAYEV, K.I.; POLOSUKHIN, A.P.; BAISHEV, S.B.; CHOKIN, Sh.Ch.; BORUKAYEV, R.A.; AKHMEDSAFIN, U.M.; KUSHEV, G.L.; SHCHERBA, G.N.; MONICH, V.K.; MEDOYEV, G.TS.; LAVROV, V.V.; BARBOT-DE-MARNI, A.V.; GALITSKIY, V.V.; ZHILINSKIY, G.B.; KAYUPOV, A.K.; KAZANLI, D.N.; KOLOTILIN, N.F.; MUKHAMEDZHANOV, S.M.; SATPAYEVA, T.A.; VEYTS, B.I.; GAZIZOVA, K.S.; CHOLPANKULOV, T.Ch.; PARSHIN, A.V.; BYKOVA, M.S.; MITKYAYEVA, N.M.; VOLKOV, A.N.; CHAKABAYEV, S.Ye.; YARENSKAYA, M.A.; KHAYRUTDINOV, D.Kh.

On the 60th anniversary of the birth of I.I. Bok, Academician of the Academy of the Kazakh S.S.R. Vest.AN Kazakh.SSR 14 no.10:95-96 O '58. (MIRA 11:12)

(Bok, Ivan Ivanovich, 1898-)

APPROVED FOR RELEASE: 06/23/11: CIA-RDP86-00513R001134700006-6

APPROVED FOR RELEASE: 06/23/11: CIA-RDP86-00513R001134700006-6

SATPAYEV, K.I.; BORUKAYEV, R.A.; AKHMEDSAFIN, U.M.; BOK, I.I.; KUSHEV, G.L.; SERGIYEV, N.G.; SHLYGIN, Ye.D.; SHCHERBA, G.N.; MONICH, V.K.; LOMONOVICH, I.I.; LAVROV, V.V.; MEDOYEV, G.TS.; NOVOKHATSKIY, I.P.; BARBOT-DE-MARNI, A.V.; GALITSKIY, V.V.; KOLOTILIN, N.F.; ZHILINSKIY, G.B.; KAYUPOV, A.K.; KAZANLI, D.N.; SATPAYEVA, T.A.; ABDULKABIROVA, M.A.; GAZIZOVA, K.S.; VEYTS, B.I.; KHAYRUTDINOV, D.Kh.; MUKHAMEDZHANOV, S.M.; CHOLPANKULOV, T.Ch.; PARSHIN, A.V.; TAZHIBAYEVA, P.T.; YANULOVA, M.K.; BYKOVA, M.S.; VOLKOV, A.N.; BOLGOV, G.N.; MITRYAYEVA, N.M.; CHOKABAYEV, S.Ye.; KUNAYEV, D.S.; YARENSKAYA, M.A.; REBROVA, T.I.

Tireless explorer of the depths of the earth's crust; on the 65th birthday and 40th anniversary of the scientific engineering activities of Academician M.P. Rusakov. Vest. AN Kazakh. SSR 13 no.12:96-97 D '57. (MIRA 11:1)

(Rusakov, Mikhail Petrovich, 1892-)

APPROVED FOR RELEASE: 06/23/11: CIA-RDP86-00513R001134700006-6

APPROVED FOR RELEASE: 06/23/11: CIA-RDP86-00513R001134700006-6

MITRYAYEVA, N.M.

IVANKIN, P.F.; MITRYAYEVA, N.M.

Some results of structural and paragenetic studies of "Nikolayevskoye" sulfide deposits in the Altai. Trudy Alt. GMNII AN Kazakh. SSR no.5: 14-33 '57. (MIRA 11:4)

(Altai Territory--Sulfides)

APPROVED FOR RELEASE: 06/23/11: CIA-RDP86-00513R001134700006-6

APPROVED FOR RELEASE: 06/23/11: CIA-RDP86-00513R001134700006-6

MITRYAYEVA, N.M.

Phenomena of selective metasomatism in one of the lead deposit groups of Kara-Tau. Izv.AN Kazakh.SSR.Ser.geol. no.22:92-98 '56. (MLRA 9:8)

(Kara-Tau--Lead ores) (Kara-Tau--Metasomatism)

APPROVED FOR RELEASE: 06/23/11: CIA-RDP86-00513R001134700006-6

APPROVED FOR RELEASE: 06/23/11: CIA-RDP86-00513R001134700006-6

ILLEGIBLE

APPROVED FOR RELEASE: 06/23/11: CIA-RDP86-00513R001134700006-6

APPROVED FOR RELEASE: 06/23/11: CIA-RDP86-00513R001134700006-6

MITRYAYEVA, N.M.

Origin of lead deposits in the Kara-Tau. Izv.AN Kazakh.SSR.Ser. geol. no.21:41-52 '55. (MLRA 9:8)
(Kara-Tau--Lead ores)

APPROVED FOR RELEASE: 06/23/11: CIA-RDP86-00513R001134700006-6

APPROVED FOR RELEASE: 06/23/11: CIA-RDP86-00513R001134700006-6

ACC NR: AP6029029

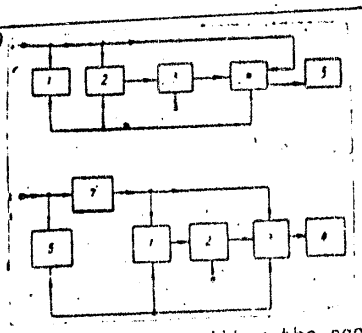

Fig. 1. 1 - predicting filter; 2 - comparison stage; 3 - threshold stage; 4 - electronic selector; 5 - load; 6 - interpolation filter; 7 - delay line

passes to the load of the device either the accepted or the predicted signal, depending on which of these signals is statistically closer to the actual signal. The device is made in such a form that an interpolation filter is mounted in the output of the communications channel instead of the predicting filter. Between this interpolation filter and the comparison stage a delay line is connected in the passing circuit of the accepted signal. This delay line provides a delay of the accepted signal by an amount equal to half of the interpolation interval. Orig. art. has: 1 figure.

SUB CODE: 09, 17/ SUBM DATE: 24May65

Card 2/2

APPROVED FOR RELEASE: 06/23/11: CIA-RDP86-00513R001134700006-6

APPROVED FOR RELEASE: 06/23/11: CIA-RDP86-00513R001134700006-6

ACC NR: AP6029029 SOURCE CODE: UR/0413/66/000/014/0040/0040

INVENTOR: Mitryayev, Ye. V.

ORG: none

TITLE: A device for the optimum processing of telemetry signals at the output of a communications channel. Class 21, No. 183806

SOURCE: Izobret prom obraz tov zn, no. 14, 1966, 40

TOPIC TAGS: signal processing, telemetry equipment, telemetry technique

ABSTRACT: This Author Certificate presents a device for the optimum processing of telemetry signals at the output of a communications channel. The device is produced on the basis of a multiple stage circuit and is designed to reduce the errors to values. A predicting filter (which produces a linear prediction with a minimum mean-square error) and a stage for the comparison of the accepted value with the predicted value are connected in parallel to the resulting signal at the output of the communications channel. The comparison stage is made on the basis of a summator circuit with a modulus of two. The output of the comparison stage is connected to the threshold stage with the triggering level set in accordance with the statistical characteristics of the signal and the interference (see Fig. 1). An electronic selector selector is connected to the output of the threshold stage. This electronic selector

UDC: 621.398:621.372.542.29

Card 1/2

APPROVED FOR RELEASE: 06/23/11: CIA-RDP86-00513R001134700006-6

APPROVED FOR RELEASE: 06/23/11: CIA-RDP86-00513R001134700006-6

L 10240-63 EWT(d)/FCC(w)/EDS--AFFTC/ASD/
ACCESSION NR: AP3000987 S/0109/63/008/006/0923/0929

56

AUTHOR: Mikhayev, Ye. V.

TITLE: Transmission of telemetering information by means of group codes

SOURCE: Radiotekhnika i elektronika, v. 8, no. 6, 1963, 923-929

TOPIC TAGS: telemetering, group code, noise-immune communication

ABSTRACT: A mathematical method of optimum representation of digital data by noise-immune group-code combinations is offered. A minimum mean risk, in terms of a power function of losses and for a uniform distribution of a-priori probabilities, is ensured. "The formulation of this problem was repeatedly discussed with L. F. Borodin who supplied a few valuable advices." "In conclusion the author is thankful to N. N. Buga for his/her? constant attention to this work." Orig. art. has: 26 formulas, 1 figure, and 3 tables.

ASSOCIATION: none

SUBMITTED: 15Jun62 DATE ACQD: 01Jul63 ENCL: 00

SUB CODE: CO,IE NO REF SOV: 003 OTHER: 000

Card 1/2

APPROVED FOR RELEASE: 06/23/11: CIA-RDP86-00513R001134700006-6

APPROVED FOR RELEASE: 06/23/11: CIA-RDP86-00513R001134700006-6

MATVEYEV, G.A.; YEVGRAFOVA, L.N., otv.za vypusk; KURSHEV, N.V., prof.otv.red.; VAKHITOV, M.B., kand.tekhn.nauk, dotsent, red.; GALIULLIN, A.S., doktor, tekhn.nauk, red.; MITRYAYEV, M.I., kand.tekhn.nauk, dotsent, red.; RADTSIG, Yu.A., doktor tekhn.nauk, prof., red.; FEDOROV, A.K., kand.tekhn.nauk, dotsent, red.

[A method for generating tooth surfaces of hyperbolical gears] Odin iz sposobov obrazovaniia poverkhnostei zub'ev giperboloidnykh koles. Kazan' 1960. 23 p. (Kazan. Aviatsionnyi institut. Trudy, no.60). (MIRA 15:3)

(Gearing, Bevel)

APPROVED FOR RELEASE: 06/23/11: CIA-RDP86-00513R001134700006-6

APPROVED FOR RELEASE: 06/23/11: CIA-RDP86-00513R001134700006-6

ILLEGIBLE

APPROVED FOR RELEASE: 06/23/11: CIA-RDP86-00513R001134700006-6

APPROVED FOR RELEASE: 06/23/11: CIA-RDP86-00513R001134700006-6

ILLEGIBLE

APPROVED FOR RELEASE: 06/23/11: CIA-RDP86-00513R001134700006-6