APPROVED FOR RELEASE: 06/23/11: CIA-RDP86-00513R001134900005-6

MOKHOVA, V.K., kand.med.nauk; BLOKH, G.K., kand.med.nauk; SNEZHKOV, S.Ya., vrach; IVANOVA, L.A., vrach

Goiter in Bezhetsk District, Kalinin Province. Trudy KGMI no.10:55-56 '63. (MIRA 18:1)

1. Iz kafedry fakul'tetskoy terapii (zav. kafedroy - prof. N.N. Vysotskiy) i kafedry fakul'tetskoy khirurgii (zav. kafedroy - zasluzhennyy deyatel' nauki RSFSR prof. V.S.Semenov) Kalininskogo gorodskogo meditsinskogo instituta.

APPROVED FOR RELEASE: 06/23/11: CIA-RDP86-00513R001134900005-6

APPROVED FOR RELEASE: 06/23/11: CIA-RDP86-00513R001134900005-6

[illegible] before and after a [illegible]. [illegible] no. [illegible] 226-230 '63. (MIRA 18:[illegible])

1. Iz kafedry fakul'tetskoy terapii (zav. kafedroy - prof. N.N. Vysotskiy) Kalininskogo gosudarstvennogo meditsinskogo institu[illegible].

APPROVED FOR RELEASE: 06/23/11: CIA-RDP86-00513R001134900005-6

APPROVED FOR RELEASE: 06/23/11: CIA-RDP86-00513R001134900005-6

no.4:45-50

1. Iz fakul'tetskoy terapevticheskoy kliniki (dir.-deystvitel'nyy chlen AMN SSSR prof. V.N.Vinogradov) I Moskovskogo ordena Lenina meditsinskogo instituta.

(ANGINA PECTORIS, physiology, periodicity)

(PERIODICITY, in various diseases, angina pectoris)

APPROVED FOR RELEASE: 06/23/11: CIA-RDP86-00513R001134900005-6

APPROVED FOR RELEASE: 06/23/11: CIA-RDP86-00513R001134900005-6

MOKHOVA, V. K.

"Angina Pectoris, The Characteristics of Its Course in Hypertensive Patients." Cand Med Sci, First Moscow Medical Inst, Moscow, 1954.
(KL, No 7, Feb 55)

SO: Sum. No. 631, 26 Aug 55 - Survey of Scientific and Technical Dissertation Defended at Most Higher Educational Institutions.
(14)

APPROVED FOR RELEASE: 06/23/11: CIA-RDP86-00513R001134900005-6

APPROVED FOR RELEASE: 06/23/11: CIA-RDP86-00513R001134900005-6

POPOVA, E.N.; MOKHOVA, T.M.

Functional and structural changes in the central nervous system under the influence of nivaline. Zhur. vys. nerv. deiat. 14 no.2: 337-345 Mr-Ap '64. (MIRA 17:6)

1. Institute of Brain, U.S.S.R. Academy of Medical Sciences, Moscow.

APPROVED FOR RELEASE: 06/23/11: CIA-RDP86-00513R001134900005-6

APPROVED FOR RELEASE: 06/23/11: CIA-RDP86-00513R001134900005-6

MOKHOVA, T.M.

Electroencephalography in vascular disorders of the motor analyzer in man. Zhur. nevr. i psikh. 61 no.9:1294-1298 '61. (MIRA 14:9)

1. Laboratoriya elektrofiziologii (zav. - prof. L.G.Trofimov) Instituta mozga (dir. - prof. S.A.Sarkisov) AMN SSSR, Moskva.
(ELECTROENCEPHALOGRAPHY) (APOPLEXY)

APPROVED FOR RELEASE: 06/23/11: CIA-RDP86-00513R001134900005-6

APPROVED FOR RELEASE: 06/23/11: CIA-RDP86-00513R001134900005-6

MOKHOVA, T.M.

"Problems in the diagnosis and pathomorphology of nervous diseases," edited by F.A.Poemnyi, M.L.Biriukov. Reviewed by T.M.Mokhova. Zhur.nevr.i psikh. 61 no.2:312-313 '61. (MIRA 14:6)
(NERVOUS SYSTEM—DISEASES) (POEMNYI, F.A.)
(BIRIUKOV, M.L.)

APPROVED FOR RELEASE: 06/23/11: CIA-RDP86-00513R001134900005-6

APPROVED FOR RELEASE: 06/23/11: CIA-RDP86-00513R001134900005-6

SARKISOV, S.A., MOKHOVA, T.M.

Effect of eserine on structural changes in the synapses and on bio-electric potentials of the cerebral cortex [with summary in French] Zhur.nevr. i psikh. 58 no.8:907-913 '58 (MIRA 11:9)

1. Institut mozga AMN SSSR, Moskva.
(PHYSOSTIGMINE, effects,
on brain synapses & EEG (Rus))
(ELECTROENCEPHALOGRAPHY, eff. of drugs on,
physostigmine (Rus))
(BRAIN, eff. of drugs, on
physostigmine, on synapses (Rus))
(SYNAPSES,
brain, eff. of physostigmine (Rus))

APPROVED FOR RELEASE: 06/23/11: CIA-RDP86-00513R001134900005-6

APPROVED FOR RELEASE: 06/23/11: CIA-RDP86-00513R001134900005-6

MOKHOVA, T.M.

"Proserine, eserine, dibazole and their use in neuropathology" by N.N. Anosov, M.A. Rozin. Zhur.nevr. i psikh. 58 no.7:893-895 '58 (MIRA 11:7)

(PHARMACOLOGY)
(NERVOUS SYSTEM--DISEASES)
(ANOSOV, N.N.)
(ROZIN, M.A.)

APPROVED FOR RELEASE: 06/23/11: CIA-RDP86-00513R001134900005-6

APPROVED FOR RELEASE: 06/23/11: CIA-RDP86-00513R001134900005-6

MOKHOVA, T.M.

"Clinical electroencephalography" by S.A. Chugunov. Reviewed by T.M. Mokhova. Zhur.nevr. i psikh 58 no.4:506-507 '58 (MIRA 11:5)
(ELECTROENCEPHALOGRAPHY)
(CHUGUNOV, S.A.)

APPROVED FOR RELEASE: 06/23/11: CIA-RDP86-00513R001134900005-6

APPROVED FOR RELEASE: 06/23/11: CIA-RDP86-00513R001134900005-6

MOKHOVA, T. M.

TROFIMOV, L.G., prof.; MOKHOVA, T.M.

Achievements in concepts about the brain. Vest. AMN SSSR 13 no.1: 12-18 '58. (MIRA 11:2)

1. Institut mozga AMN SSSR.
(BRAIN
anat. & physiol. study achievements, review)

APPROVED FOR RELEASE: 06/23/11: CIA-RDP86-00513R001134900005-6

APPROVED FOR RELEASE: 06/23/11: CIA-RDP86-00513R001134900005-6

MOKHOVA, T. M.

BLINKOV, S.M.; MOKHOVA, T.M.

Development of the temporoparieto-occipital ssubarea in man. Zhur. nevr. i psikh. 56 no.12:970-971 '56. (MLRA 10:2)

1. Nauchno-issledovatel'skiy institut mozga (dir. - prof. S.A. Sarkisov) AMN SSSR, Moskva.
(BRAIN, anat. and histol.
temporo-parieto-occipital substrate develop. in apes & man)

APPROVED FOR RELEASE: 06/23/11: CIA-RDP86-00513R001134900005-6

APPROVED FOR RELEASE: 06/23/11: CIA-RDP86-00513R001134900005-6

EXCERPTA MEDICA Sec.2 Vol.10/8 Phy.Biochem. Aug 57

3478. MOKHOVA T.M. Electrical phenomena in cortical areas of analysors in the elaboration of motor conditioned reflexes in man (Russian text) Ž.VYŠČ NERV DEJATEL. [illegible] 328) Graphs 5 Illus 1

The registration of biopotentials from places of the skull corresponding to the optic acoustic and motor cortical areas as well as from muscles of the subject's hand in the course of the elaboration and fixation of motor conditioned reflexes in man was performed by means of EEG. A low sound was the positive and a high sound was the inhibitory conditioned stimulus; the reaction consisted in the pressing of a rubber bulb with the hand. The most distinct changes of EEG to the positive stimulus (the appearance of slow waves with fast waves superimposed on them) as well as to negative stimulus (lowering of amplitude of the waves) were found at all investigated areas in the several first experiments; also the EMG waves showed an increased amplitude. After fixation of the reflexes the changes of EEG became limited to the motor area and the EMG showed a lower amplitude and shorter duration than before.

Wyrwicka - Warsaw

APPROVED FOR RELEASE: 06/23/11: CIA-RDP86-00513R001134900005-6

APPROVED FOR RELEASE: 06/23/11: CIA-RDP86-00513R001134900005-6

MOKHOVA, T.I.; TURINYA, G.K.; KONOPLEVA, N.V.

Here is a word from directors of agrochemical laboratories. Nauka i pered. op. v sel'khoz. 7 no.5:33-34 My '57. (MLRA 10:6)

1. Argokhimicheskaya laboratoriya Petrovskoy mashinno-traktornoy stantsii, Yaroslavskoy oblasti (for Mokhova). 2. Agrokhimicheskaya laboratoriya Liyelstraupskoy mashinno-traktornoy stantsii, Latviyskoy SSR (for Turinya). 3 Agrokhimicheskaya laboratoriya Vitebskoy mashinno-traktornoy stantsii, Belorusskoy SSR (for Konopleva).
(Agricultural chemistry)

APPROVED FOR RELEASE: 06/23/11: CIA-RDP86-00513R001134900005-6

APPROVED FOR RELEASE: 06/23/11: CIA-RDP86-00513R001134900005-6

ROSSIKHIN, V.S.; PROTOPOPOVA, A.K.; MOKHOVA, N.V.

"Molecular physics" by I.V. Radchenko. Reviewed by V.S. Rossikhin, A.K. Protopopova, N.V. Mokhova. Inzh.-fiz. zhur. 4 no.9:134-135 S '61. (MIRA 14:8)
(Molecular theory) (Radchenko, I.V.)

APPROVED FOR RELEASE: 06/23/11: CIA-RDP86-00513R001134900005-6

APPROVED FOR RELEASE: 06/23/11: CIA-RDP86-00513R001134900005-6

GRODZINSKIY, A.M. [Hrodsins'kyi, A.M.]; MOKHOVA, N.I.; PILIPENKO-YURCHAK, L.D. [Pylypenko-IUrchak, L.D.]; FILIPPOVICH, T.N. [Filippovych, T.M.]

Growth inhibiting substances in crop residues and weeds. Part 1: Effect of water-soluble inhibitors on seed germination and plant growth. Ukr. bot. zhur. 19 no.6:30-38 '62. (MIRA 16:2)

1. Institut botaniki AN UkrSSR, otdel fiziologii.
(Growth inhibiting substances) (Germination)

APPROVED FOR RELEASE: 06/23/11: CIA-RDP86-00513R001134900005-6

APPROVED FOR RELEASE: 06/23/11: CIA-RDP86-00513R001134900005-6

UKHANOV, V.V.; FLEROVA, R.A.; ZNAMENSKAYA, Ye.M.; SEMENOVA, Ye.S.; ANDREYEVA, N.M.; SKORODUMOV, D.Ye.; GAVRILOV, A.M.; PETRIKEVICH, N.P.. Prinimali uchastiye: MOKHOVA, M.A.; BORSUK, N.V.. PROSKURYAKOV, A.K., otv.red.; SHATILINA, M.K., red.; SOLOVEYCHIK, A.A., tekhn.red.

[Directions for hydrometeorological stations and posts] Nastavlenie gidrometeorologicheskim stantsiiam i postam. Leningrad, Gidrometeor.izd-vo. No.6, pt.3. [Compiling and preparing for printing the yearbook of hydrology] Sostavlenie i podgotovka k pechati gidrologicheskogo ezhegodnika. 1958. 290 p. (MIRA 13:2)

1. Russia (1923- U.S.S.R.) Glavnoe upravlenie gidrometeorologicheskoi sluzhby. 2. Otdel gidrometrii Gosudarstvennogo ordena Trudovogo Krasnogo Znameni gidrologicheskogo instituta (for all except Shatilina, Soloveychik).
(Hydrology--Yearbooks)

APPROVED FOR RELEASE: 06/23/11: CIA-RDP86-00513R001134900005-6

APPROVED FOR RELEASE: 06/23/11: CIA-RDP86-00513R001134900005-6

LEVIN, Ya.A.; MOKHOVA, A.P.; KUKHTIN, V.A.

Synthesis of some derivatives of 4, 5, 6, 7-dibenz-1, 3-diaza-2, 4, 6-cycloheptatriene. Zhur.ob.khim. 31 no.5:1573-1576 My '61. (MIRA 14:5)

1. Kazanskiy filial nauchno-issledovatel'skogo kinofotoinstituta. (Cycloheptatriene)

APPROVED FOR RELEASE: 06/23/11: CIA-RDP86-00513R001134900005-6

APPROVED FOR RELEASE: 06/23/11: CIA-RDP86-00513R001134900005-6

MOKEEVA, A.G.(Nishnyaya Tura, Sverdlovskaya oblast')

How do I instill lasting knowledge in pupils studying geometry.
Mat. v shkole no.5:61-63 S-O '60. (MIRA 13:10)
(Geometry--Study and teaching)

APPROVED FOR RELEASE: 06/23/11: CIA-RDP86-00513R001134900005-6

APPROVED FOR RELEASE: 06/23/11: CIA-RDP86-00513R001134900005-6

MOKHOV, Z.S., kand.tekhn.nauk, dotsent

Elastic properties and strength of quartz sandstone, diabase, and dolomite. Sbor. trud. LIIZHT no.174:201-216 '60. (MIRA 15:11)
(Rocks--Testing)

APPROVED FOR RELEASE: 06/23/11: CIA-RDP86-00513R001134900005-6

APPROVED FOR RELEASE: 06/23/11: CIA-RDP86-00513R001134900005-6

APPROVED FOR RELEASE: 06/23/11: CIA-RDP86-00513R001134900005-6

APPROVED FOR RELEASE: 06/23/11: CIA-RDP86-00513R001134900005-6

MOKHOV, Z.S., kand.tekhn.nauk, dotsent

Investigating and selection of grouting fillers used for sealing tunnels and other underground structures. Sbor. LIIZHT no.156:196-211 '58. (MIRA 11:9)

(Grouting) (Mortors) (Tunnels)

APPROVED FOR RELEASE: 06/23/11: CIA-RDP86-00513R001134900005-6

APPROVED FOR RELEASE: 06/23/11: CIA-RDP86-00513R001134900005-6

MOKHOV, Z.S.

MOKHOV, Z.S., kandidat tekhnicheskikh nauk, dotsent

Elastic properties of some rocks. Sbor. LIIZHT no.148:180-186 '55
(Rocks--Testing) (MIRA 8:10)

APPROVED FOR RELEASE: 06/23/11: CIA-RDP86-00513R001134900005-6

APPROVED FOR RELEASE: 06/23/11: CIA-RDP86-00513R001134900005-6

MOKHOV, Yu.V., assistent

Effect of rounding-off errors on the accuracy of the solution of systems of linear equations. Trudy MIRGAIK no.42:[illegible]

[illegible]

1. Kafedra geodezii Moskovskogog instituta inzhenerov [illegible] aerofotos"yemki i kartografii.

(Algebras linear)

APPROVED FOR RELEASE: 06/23/11: CIA-RDP86-00513R001134900005-6

APPROVED FOR RELEASE: 06/23/11: CIA-RDP86-00513R001134900005-6

KLIMOV, O.D., kand.tekhn.nauk; MOKHOV, Yu.V., aspirant

Oscillation of the axis of sight in theodolites during focussing. Trudy MIIGAIK no.36:55-62 '59. (MIRA 13:4)

1. Kafedra prikladnoy geodezii Moskovskogo instituta inzhenerov geodezii, aerofotos"yemki i kartografii.
(Theodolites)

APPROVED FOR RELEASE: 06/23/11: CIA-RDP86-00513R001134900005-6

APPROVED FOR RELEASE: 06/23/11: CIA-RDP86-00513R001134900005-6

3(2),3(4)

AUTHOR: None Given SOV/6-59-6-21/22

TITLE: Chronicle (Khronika)

PERIODICAL: Geodesiya i kartografia, 1959, Nr 6, pp 74-75 (USSR)

ABSTRACT: At the Moskovskiy institut inzhenerov geodezii, aerofotos"yemki i kartografii (Moscow Institute of Geodetic, Aerial Survey and Cartographic Engineers), the Ordinary Scientific Conference took place on April 22-24. A. I. Ivanov, Docent, Candidate of Philosophic Sciences, spoke on "The Outstanding Work of Materialistic Philosophy". A. N. Baranov, Chief of the Glavnoye upravleniye geodezii i kartografii (Main Administration of Geodesy and Cartography) spoke "On the Seven-year Plan for the Development of Topographic-geodetic and Cartographic Work". The following reports were delivered in the geodetic section: A. M. Faynsil'ber, Professor, "Some Integrals of the Surface Theorems and Their Application to the Mechanics of Artificial Satellites of the Earth".- A. V. Kondrashkov, Docent, "Radio-electronics and Geodesy".- G. V. Bagratuni, Docent, "Accuracy in the Solution of Inverse Position Computations by the Coordinates of Different Geodetic Systems".- P. P. Shokin, Docent, "Gravimetry in the Present Stage of Development".- Yu. V. Makhov, Assistant, reported on the influence of rounding errors on the accuracy of solution of linear equation systems.- V. D. Bol'shakov, Candidate of Technical Sciences, spoke on the "Investigation of the Rules of Distribution of Errors in Generalising the Relief in Surveys".- N. D. Drozdov, Post-graduate Student, reported on the solution of linear systems for the adjustment of geodetic networks.- V. M. Korolevtsev, Docent, demonstrated an apparatus designed by him for parallactic traversing with a short constant vertical basis.- The following reports were delivered in the aerophotogeodetic section: A. S. Valnyev, Docent, reported on a parallactic reducer, an additional device to the stereo-comparator.- N. N. Veselovskiy, Docent, spoke on the possibility of generalising the formulas for the air survey of outlines and altitudes.- B. N. Rodionov and N. P. Zakasnov, Docents, reported on a band-shaped central shutter for aerial cameras, B. N. Rodionov on a stroboscopic collimator sight, B. N. Rodionov and Engineer V. I. Yerkhov on the scheme of a computing device for the automatic entry of the airplane into the route for air surveys.- Ye. P. Arzhanov presented some simplifications for the computation of constants of aerial cameras.- Yu. N. Kuznetsov, Post-graduate Student, spoke on the use of rapid film recording for the investigation of aerial-camera shutters.- V. I. Grishin, Engineer of the Geotekhkontora Gosplana RSFSR, spoke "On Some Results and Tasks in the Execution of Large-scale Photo-theodolite Surveys".- The following reports were delivered in the cartographic section: Professor V. I. Sukhov spoke on the content of the new map on a scale of 1 : 2,500,000.- Professor A. I. Preobrazhenskiy spoke on "Mineral Resources of the USSR and Their Representation on Economic Maps".- S. S. Sudakova, Assistant, reported on the method of geographic field research during the preparatory editorial work at the object of cartography.- A. S. Tolstoukhov, Assistant, reported on the improvement of relief representation of wooded flat country on the topographic map on a scale of 1 : 10,000.- Yu. S. Bilish, Assistant, reported on maps of apartment building in the atlases of the oblast'.- In the section of building of apparatus, I. I. Men'shikov, Docent, spoke on the life of A. S. Popov.- N. V. Yakovlev, Assistant, reported on reflecting lenses, Professor I. G. Sarkin on the increase in accuracy in measuring physical magnitudes, Engineer V. M. Nazarov on vertical axial systems for highly accurate optic theodolites, V. S. Usov, Assistant, on sighting with telescopes with zone plates, P. P. Zakharov, Assistant, on the automatization of evaluation of image couples.

Card 1/4

Card 2/4

Card 3/4

APPROVED FOR RELEASE: 06/23/11: CIA-RDP86-00513R001134900005-6

MOKHOV, Yu. V.

TITLE: Scientific-technical Conference of the MIIGA i K in 1959 (Nauchno-tekhnicheskaya konferentsiya MIIGA i K 1959 g.)

PERIODICAL: Izvestiya vysshikh uchebnykh zavedeniy. Geodeziya i aerofotos"yemka, 1959, Nr 3, pp 144 - 146 (USSR)

ABSTRACT: The periodic scientific-technical conference of the Moskovskiy institut inzhenerov geodezii, aerofotos"yemki i kartografii (Moscow Institute of Geodetic, Aerial Survey and Cartographic Engineers) was held on April 22-24, 1959, with the participation of 500 persons. 31 lectures were delivered. The introductory speech was held by Professor A. A. Izotov. Candidate of Philosophical Sciences A. I. Ivanov lectured on "The Outstanding Work of Materialistic Philosophy"; Candidate of Technical Sciences A. V. Kondrashkov on "Radioelectronics and Geodesy"; Candidate of Technical Sciences G. V. Bagratuni on "Accuracy of the Solution of the Inverse Position Computation With Coordinates of Different Geodetic Systems"; Candidate of Technical Sciences P. P. Shokin reported on "Gravimetry in Today's Stage of Development"; Candidate of Technical Sciences V. D. Bol'shakov on "Investigation of the Rules Governing the Distribution of Errors When Generalizing the Relief in Photography"; Post-graduate Student Iu. V. Mokhov on "The Influence of the Rounding Error on the Accuracy of Solutions of Linear Equation Systems". Post-graduate Student N. D. Drozdov reported "On the Solution of Linear Systems in the Compensation of Geodetic Nets". Docent V. M. Korolevtsev dealt with "The Experience in the Application of Parallactic Polygonometry With Short Basis and Constant Vertical Basis". Doctor of Physical and Mathematical Sciences A. M. Faynzil'berg lectured on "Some Integrals From the Theory of Surfaces and Their Application to the Mechanics of Artificial Earth Satellites"; Candidate of Technical Sciences A. S. Valuyev on "The Stereocomparator With Correctors". Assistant M. I. Burov spoke on "Photogrammetric Method of Determining the Altitudes of Luminous Clouds". Candidate of Technical Sciences N. N. Veselovskiy reported on "The Generalization of the Formulas for the Plane Aerial Survey and the Altitudinal Aerial Survey". Candidate of Technical Sciences B. N. Rodionov and Candidate of Technical Sciences M. P. Zakazov dealt with "Central Shutters of Band Type Aerial Cameras". Candidate of Technical Sciences B. N. Rodionov spoke on the "Stroboscopic Collimator Visor"; Engineer V. I. Yerkhov reported on a "Computing Gear for the Automatic Entry of the Airplane in the Aerial Photography Path". Post-graduate Student Iu. S. Kazanetsov spoke on the "Application of the Instantaneous Photography for Aerial Camera Testing". Assistant Ye. P. Arzhanov spoke on the "Computation of the Aerial Camera Constants"; Engineer V. I. Grushin, Chief Technician of the Geotekhkomtsen Gosplana RSFSR on "Some Results and Tasks Related to Large-scale Phototheodolite Surveying Operations"; Doctor of Technical Sciences V. I. Sukhov on "The Problem Concerning the Contents of the New Map on the Scale of 1 : 2500000"; Doctor of Technical Sciences A. I. Preobrazhenskiy on "Mineral Deposits in the USSR and Their Reproduction on Economic Maps"; Assistant S. S. Sudakova on the "Method of Geographic Investigation on the Field During the Preparatory Editorial Work on the Cartographing Object (From the Working Experience Acquired by the Meshcherskaya ekspeditsiya (Meshcherskaya Expedition of the MIIGA i K 1958)". Assistant A. S. Tolstoukhov dealt with "The Problem of Improving the Relief Representation of a Flat Inhabited Territory on the Topographic Map on the Scale of 1 : 10000". Candidate of Technical Sciences Iu. S. Bilich spoke on "Maps of Cultivated Areas in the Comprehensive Atlantes of the Oblast'". Candidate of Technical Sciences I. I. Men'shikov dealt with "A. S. Popov - Scientist, Inventor, Pedagogist (On the 100th Birthday of A. S. Popov)". Senior Lecturer N. V. Yakovlev lectured on "Mirror Lens Objectives With Great Luminous Intensity". Professor I. G. Sarkin reported on "The Problem of Compensating the Variations and the Increase of Accuracy in the Measurement of Physical Quantities". Candidate of Technical Sciences V. A. Afanas'yev dealt with "Methods of Measuring Investigations Concerning Optical Main Characteristics of Aerial Camera Objectives With Dropping Atmospheric Pressure and Temperature". Engineer V. M. Nazarov lectured on "Vertical Axis Systems of High-precision Optical Theodolites". Assistant V. S. Usov spoke on "Sighting by the Aid of Telescopes With Zone Plates". Post-graduate Student P. P. Zakharov dealt with "The Automation of Measurements on a Pair of Stereoscopic Pictures". At the Plenary Session held on April 24 the Chief of the Glavnoye upravleniye geodezii i kartografii MVD SSSR (Chief Administration of Geodesy and Cartography of the Ministry of Internal Affairs of the USSR), A. N. Baranov lectured on "The Seven-year Plan and the Development of Topographic-geodetic and Cartographic Work".

Card 1/3

Card 2/3

Card 4/3

APPROVED FOR RELEASE: 06/23/11: CIA-RDP86-00513R001134900005-6

APPROVED FOR RELEASE: 06/23/11: CIA-RDP86-00513R001134900005-6

ACCESSION NR: AP4025086

boron concentrations in the original specimen, both the activation energy and the pre-exponential multiplier D_0 tend to increase. It is assumed that the phosphor diffuses in silicon, with a given amount of alloy concentration as acceptors, through vacant lattice points throughout the temperature range 1100 to 1300C. It is shown that with an increase in silicon solution concentration with acceptor impurities an increase is observed in D_0 which can be explained as an entropy rise in the system. Throughout the experiments a very sharp increase in activation energy was observed with an increase in acceptor mixture because of changes in the location of Fermi levels. "The author is grateful to B. I. Boltaks and G. F. Myachkova for their help." Orig. art. has: 10 equations, 6 figures, and 3 tables.

ASSOCIATION: Leningradskiy politekhnicheskiy institut imeni M. I. Kalinina (Leningrad Polytechnical Institute)

SUBMITTED: 14Jul62 DATE ACQ: 14Feb64 ENCL: 00

SUB CODE: PH NO REF SOV: 005 OTHER: 008

Card 2/2

APPROVED FOR RELEASE: 06/23/11: CIA-RDP86-00513R001134900005-6

APPROVED FOR RELEASE: 06/23/11: CIA-RDP86-00513R001134900005-6

S/0139/63/000/006/0041/0048

ACCESSION NR: AP4025086

AUTHOR: Mokhov, Yu. N.

TITLE: Diffusion of phosphorus in silicon alloyed with gallium and boron

SOURCE: IVUZ. Fizika, no. 6, 1963, 41-48

TOPIC TAGS: silicon gallium alloy, boron alloy, diffusate, activation energy, phosphorus, lattice point, acceptor admixture

ABSTRACT: An experimental investigation has been made of P^{32} diffusion in silicon with gallium in concentrations of $2 \cdot 10^{17}$ to $1.4 \cdot 10^{19}$ cm^{-3} and with boron alloyed at $3 \cdot 10^{17}$ to $3 \cdot 10^{19}$ cm^{-3} concentrations; samples were heat treated in air for 100 hours at 1250C. The concentration distribution of the diffusate is expressed by the law.

$$C(x, t) = C_0 \operatorname{erfc} \frac{x}{2\sqrt{Dt}} .$$

The results are given in graphical and tabular form. With increase in gallium and

Card 1/2

APPROVED FOR RELEASE: 06/23/11: CIA-RDP86-00513R001134900005-6

APPROVED FOR RELEASE: 06/23/11: CIA-RDP86-00513R001134900005-6

MOKHOV, Yu.M.

Concentration of phosphorus atoms in silicon diffusing from the gaseous phase. Izv. vys. ucheb. zav; fiz. no.1:31-34 '63. (MIRA 16:5)

1. Leningradskiy politekhnicheskiy institut imeni M.I.Kalinina.
(Silicon) (Phosphorus) (Diffusion)

APPROVED FOR RELEASE: 06/23/11: CIA-RDP86-00513R001134900005-6

APPROVED FOR RELEASE: 06/23/11: CIA-RDP86-00513R001134900005-6

Self-Diffusion and Diffusion of the Impurities in Lead Telluride and Lead Selenide 57-28-5-22/36

ASSOCIATION: Institut poluprovodnikov AN SSSR (Institute for Semiconductors, AS USSR)
Leningradskiy politekhnicheskiy institut im. M.I. Kalinina (Leningrad Polytechnical Institute imeni M.I. Kalinin)

SUBMITTED: September 18, 1957

1. Lead selenide--Impurities 2. Lead telluride--Impurities

Card 3/3

APPROVED FOR RELEASE: 06/23/11: CIA-RDP86-00513R001134900005-6

APPROVED FOR RELEASE: 06/23/11: CIA-RDP86-00513R001134900005-6

compounds. The heat of formation of PbTe equals 16,8 kcal/g-mol, which is considerably less than in a considerable number of analogous semiconductor compounds. The dislocation of Sb and Sn in the crystal lattice apparently proceeds according to the lead vacacies, and is accompanied by the formation and the destruction of the complexes Sb_2, Te_3, SnTe, and Sb_2Se_3, the cohesive forces of which are greater than those of the components of the base lattice. This latter phenomenon apparently causes the observed "anomaly" in the interrelations between the values of the activation energy in the self diffusion and the heterodiffusion of the investigated elements in PbTe and PbSe. As the heat of formation of PbSe is greater than that of PbTe the considerably higher values of the activation energy for the self- and heterodiffusion in lead selenide in comparison to lead telluride become understandable. There are 2 figures, 2 tables, and 5 references, 4 of which are Soviet.

APPROVED FOR RELEASE: 06/23/11: CIA-RDP86-00513R001134900005-6

APPROVED FOR RELEASE: 06/23/11: CIA-RDP86-00513R001134900005-6

AUTHORS: Boltaks, B. I., Mokhov, Yu. N. 57-28-5-22/36

TITLE: Self-Diffusion and Diffusion of the Impurities in Lead Telluride and Lead Selenide (Samodiffuziya i diffuziya primesey v telluride i selenide svintsa)

PERIODICAL: Zhurnal Tekhnicheskoy Fiziki, 1958, Vol. 28, Nr 5, pp. 1046--1050 (USSR)

ABSTRACT: In the present paper the authors communicated the results of the investigation of the self-diffusion of tellurium and the diffusion of antimony and tin in lead telluride as well as data on the diffusion of antimony and selenium (self-diffusion) in lead selenide. Lead telluride and-selenide crystallize in a structure of NaCl-type. The character of binding, however, in these compounds differs considerably from a pure ion binding, which is distinctive of rock salt. The combination of ion- and covalent binding in PbTe and PbSe leads to a reduction of the heat of formation as related to the gram equivalent and therefore also leads to a reduction of the cohesive forces between the components of these compounds (Ref 4). The relatively small values of the activation energy during self-diffusion in PbTe agree with the small values of the heat of formation of these

Card 1/3

APPROVED FOR RELEASE: 06/23/11: CIA-RDP86-00513R001134900005-6

APPROVED FOR RELEASE: 06/23/11: CIA-RDP86-00513R001134900005-6

MOKHOV, Yu.N.

USSR / Physical Chemistry. Crystals. B-5

Abs Jour : Ref Zhur - Khimiya, No 8, 1957, 25904

Author : B.I. Boltaks, Yu. N. Mokhov

Title : Diffusion of Lead in Telluric of Lead.

Orig Pub : Zh. Tekh. Fiz., 26, No 11, pp. 2448-50, 1956

: Monocrystalline bars of PbTe of specific conductivity of 350 to 400 mho/cm grown by Bridgeman's method were annealed in vacuum 100 hours at 400°, which reduced the hole concentration to (2 - 6) . 10^{17} per cub.cm. Pb layer was applied by vacuum evaporization. The diffusion vacuum annealing was carried out at 250 to 500°. The method of p -n-transition was used for measuring the diffusion factor D. The depth of the transition location (PbTe possesses p-conductivity, and the diffusion layer possesses the n-conductivity) was observed with a microscope. A hot W sound served as an indicator of the change of the conductivity sign. $D = 2.9 \times 10^{-5} \exp(-0.6\ ev/kT)$ sq.cm/sec was received. It is surmised that Pb^{2+} ions are shifting along the lines between lattice points of PbTe.

Card : 1/1

APPROVED FOR RELEASE: 06/23/11: CIA-RDP86-00513R001134900005-6

APPROVED FOR RELEASE: 06/23/11: CIA-RDP86-00513R001134900005-6

ACC NR: AP7000685

studies. Morphological investigation of the preparations revealed the presence of benign nevus type tumors in group 2 (control eye) and group 4 in the treated eye. In both cases the localization was under the basal epithelium of the limbus. The epithelia always remained intact. The tumors appear to be of spontaneous origin. Examination of the lids revealed occasional formation of cystic cavities on the side of the meibomian glands. No pathology was found in the retina. Orig. art. has: 1 table 1 figure.

SUB CODE: 06/ SUBM DATE: 05Feb66/ ORIG REF: 0[illegible]/ OTH REF: 001

Card 2/2

APPROVED FOR RELEASE: 06/23/11: CIA-RDP86-00513R001134900005-6

APPROVED FOR RELEASE: 06/23/11: CIA-RDP86-00513R001134900005-6

ACC NR: AP7000685 (A, N) SOURCE CODE: UR/0240/66/000/012/0010/0014

AUTHOR: Mokhov, Yu. I.

ORG: Institute of General and Communal Hygiene im. A. N. Sysin, AMN SSSR, Moscow (Institut obshchey i kommunal'noy gigiyeny AMN SSSR)

TITLE: Hygienic evaluation of maximum permissible concentration of ultraviolet radiation in artificial lighting

SOURCE: Gigiyena i sanitariya, no. 12, 1966, 10-14

TOPIC TAGS: UV irradiation, lighting equipment, tumor, photoophthalmia

ABSTRACT: The immediate and long range effects of exposing the eye to long-wave UV irradiation are studied. The eyes of 16 Chinchilla rabbits were irradiated for various periods daily for 4 months with 2850 μW, equal to 3/4 of the erythemogenic dose. The experiments were carried out in a dark room with an OE-1-15 erythemogenic luminescent radiation lamp. Group 1 was treated for 30 min at intensity of 95 μW/cm^2, group 2--1.5 hr at 31.6 μW/cm^2; group 3--3 hr at 15.5 μW/cm^2; group 4--5 hr at 9.5 μW/cm^2. The total was equal to 70 erythemogenic doses. Prolonged exposure to maximum permissible UV doses produced no visible pathology in the eyes except photoophthalmia in group 1 which was treated with a dose exceeding 15 times the normal amount. After 4 months, 2 rabbits of each group were killed, and the eyes enucleated for pathological

Card 1/2 UDC: 613.165.6:628.9

APPROVED FOR RELEASE: 06/23/11: CIA-RDP86-00513R001134900005-6

APPROVED FOR RELEASE: 06/23/11: CIA-RDP86-00513R001134900005-6

L 30173-66

ACC NR: AP6012513

Both agree well with published data, the activation energy of the diffusion of aluminum being 4.7 -- 4.9 ev. The authors thank their coworkers in the laboratory and especially Yu. P. Maslakovets for guidance, G. A. Lomakina for measuring the concentrations in the samples, and S. I. Tayts for helping construct and prepare the necessary apparatus. Orig. art. has: 2 figures.

SUB CODE: 20/ SUBM DATE: 16Nov65/ ORIG REF: 001/ OTH REF: 003

Card 2/2

APPROVED FOR RELEASE: 06/23/11: CIA-RDP86-00513R001134900005-6

APPROVED FOR RELEASE: 06/23/11: CIA-RDP86-00513R001134900005-6

L 30173-66 EWP(e)/EWT(m)/T/EWP(t)/ETI IJP(c) JD

ACC NR: AP6012513 SOURCE CODE: UR/0181/66/008/004/1298/1299

AUTHORS: Vodakov, Yu. A.; Mokhov, Ye. N.; Reyfman, M. B.

ORG: Institute of Semiconductors, AN SSSR, Leningrad (Institut poluprovodnikov AN SSSR)

84
81
E

TITLE: Diffusion of boron and aluminum in n-SiC

SOURCE: Fizika tverdogo tela, v. 8, no. 4, 1966, 1298-1299

TOPIC TAGS: silicon carbide, physical diffusion, boron, aluminum, pn junction, temperature dependence, activation energy

ABSTRACT: In view of the lack of data on the diffusion of boron and aluminum in n-SiC, in spite of the fact that it is extensively used for diffusion p-n junctions, the authors measured diffusion produced in a closed system based on vacuum-dense graphite from the gas phase at 1800 -- 2250C. The diffusion time reached 30 hours. n-type α-SiC was used with nitrogen concentration 1×10^{19}--2×10^{17} at/cm^3. The diffusion coefficient was calculated from the depth of the p-n junction, which in turn was measured by taking an oblique cut, using a thermal probe, and chemical decoration. Plots of the temperature dependence of the diffusion coefficients and empirical formulas corresponding to them are given.

Card 1/2

APPROVED FOR RELEASE: 06/23/11: CIA-RDP86-00513R001134900005-6

APPROVED FOR RELEASE: 06/23/11: CIA-RDP86-00513R001134900005-6

MOKHOV, Ye.N.

Concerning the distribution of the settling time between the output and preliminary stages of an amplifier. Izv.vys.ucheb.zav.; radiotekh. 4 no.6:671-678 N-D '61. (MIRA 15:4)

1. Rekhomendovana kafedroy radiopriyemnykh ustroystv Novosibirskogo elektrotekhnicheskogo instituta svyazi.
(Amplifiers (Electronics)) (Pulse circuits)

APPROVED FOR RELEASE: 06/23/11: CIA-RDP86-00513R001134900005-6

APPROVED FOR RELEASE: 06/23/11: CIA-RDP86-00513R001134900005-6

26214
S/106/60/000/010/009/009/XX
A055/A133

Correction of a pulse-amplifier stage with...

calculation, at the end of the article, illustrates the author's reasoning. There are 5 figures, 1 table and 4 Soviet-bloc references.

SUBMITTED: December 30, 1959

Fig. 1.
Legend: 1 - inp
2 - outp
3 - e

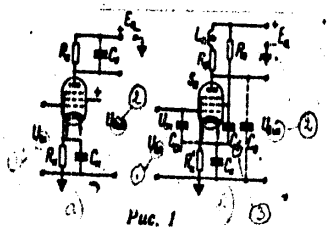

Рис. 1

[Abstracter's note: The following subscripts are translated in text and formulae:
setup stands for уст
e stands for э
fr (front) stands for ф

Card 6/6

APPROVED FOR RELEASE: 06/23/11: CIA-RDP86-00513R001134900005-6

APPROVED FOR RELEASE: 06/23/11: CIA-RDP86-00513R001134900005-6

26214
S/106/60/000/010/009/009/XX
A055/A133

of the tube, and

$$g = \frac{1}{\tau_{setup}(1+\varepsilon_{ck+}+\varepsilon_{ck-})}$$

characterizes the serviceability of the stage arrangement when it is used at the amplifier output (ε_{ck+} and ε_{ck-} are grid-cathode voltage overshoots). Analysis and graphs show that the serviceability coefficient g is the greater, the greater the ratio c of the input-pulse build-up time t_{fr} to the value of t_{setup} of the stage. At $c > 0.5$, the analysed system permits obtaining a greater g than the system with simple correction by an inductance (at the cost of a certain decrease of d). The use of the analysed system is also expedient for $c \leq 0.5$ if it is impossible to use a large C_k or if it is necessary to reduce nonlinear distortions. The additional correction by an inductance in the anode circuit ensures an increase of g by a factor of 1.5, in comparison with the correction by means of C_k alone. When $1 + SR_k$ increases, the growth of g slows down gradually and even ceases completely. When the input-pulse-front durations t_{fr+} and t_{fr-} are unequal, it is possible to obtain a serviceability coefficient very much nearer to the value corresponding to $c = \infty$ ($t_{fr} \to \infty$). The slowing down of the growth of g will occur at great values of $1 + SR_k$. This will permit to increase g still more. The optimum values of $n = \frac{C_k R_k}{C_o R_a}$ will be nearer to those which correspond to $c = \infty$ (d_{max}). A numerical

APPROVED FOR RELEASE: 06/23/11: CIA-RDP86-00513R001134900005-6

APPROVED FOR RELEASE: 06/23/11: CIA-RDP86-00513R001134900005-6

26214
S/106/60/000/010/009/009/XX
A055/A133

Correction of a pulse-amplifier stage with...

$$K(p) = \frac{S_a R_a (1+pk\tau_a)(1+p\tau_k)}{(1+p\tau_a+p^2k\tau_a^2)[1+S_aR_k+p(1+1)\tau_k]} \qquad (3)$$

Analysis and graphs show that the system of Fig. 1 b permits obtaining, at a reduced value of n and C_k ($n = \frac{C_kR_k}{C_oR_a}$), a somewhat smaller setup-time than in the case of the system shown in Fig. 1a. To compare the quality factor of pulse-amplifying systems, the author introduces the following concept of the quality of the stage:

$$D = \frac{K}{t_{setup}}$$

The system amplification factor is obtained by considering that $p \to \infty$ in (3):

$$K = \frac{S_aR_a}{1+S_aR_k} \qquad (4)$$

The setup-time of the stage is:

$$t_{setup} = \tau_{setup}C_oR_a \qquad (5)$$

τ_{setup} being the relative setup-time deduced from graphs. The quality factor of the stage with cathode feedback is:

$$D = \frac{K}{t_{setup}} = \frac{S_a}{\tau_{setup}(1+SR_k)C_o} = d\,\frac{S_a}{C_o} \qquad (6)$$

Card 3/6

APPROVED FOR RELEASE: 06/23/11: CIA-RDP86-00513R001134900005-6

APPROVED FOR RELEASE: 06/23/11: CIA-RDP86-00513R001134900005-6

$K_a(i\omega)$ representing the transmission factor of the usual stage with a simple correction by an inductance:

$$K(i\omega) = \frac{-S(R_a+i\omega L_a)}{1+i\omega C_0 R_a + (i\omega)^2 L_a C_0},$$

whereas $K_{ck}(i\omega)$ is the transmission factor from the input terminals to the grid-cathode points. In the presence of C_e connected to the cathode, we have:

$$K_{ck}(i\omega) = \frac{1+i\omega C_k R_k}{1+S_a R_k + i\omega(C_k+C_{ck})R_k}$$

where

$$R_k = \frac{R_k' R_e}{R_k'+R_e}$$

Introducing the expressions

$$p = i\omega; \quad \tau_a = C_0 R_a; \quad \tau_k = C_k R_k \quad , \qquad (2)$$
$$k = \frac{L_a}{C_0 R_a^2}; \quad l = \frac{C_{ck}}{C_k}$$

we obtain the expression for the transient response of the stage:

APPROVED FOR RELEASE: 06/23/11: CIA-RDP86-00513R001134900005-6

APPROVED FOR RELEASE: 06/23/11: CIA-RDP86-00513R001134900005-6

26214
S/106/60/000/010/009/009/XX
A055/A133

7,2510

AUTHOR: Mokhov, E. N.

TITLE: Correction of a pulse-amplifier stage with current-feedback by an inductance inserted in the anode circuit

PERIODICAL: Elektrosvyaz', no. 10, 1960, 39 - 46

TEXT: In order to compensate the quality loss in pulse-amplifier stages, T. M. Agakhanyan [Ref. 1: "Primeneniye skhemy s korrektsiyey v tsepi katoda v vykhodnom kaskade videousiliteliya" ("The use of a correcting system in the cathode circuit of a videoamplifier output stage"), Radiotekhnika, v. 12, no. 6, 1957] shunted the bias resistance R_k (see Fig. 1a) by a correcting or compensating capacitance. But the gain thus obtained in the output voltage proves often quite small. It is interesting therefore to use additional correction by means of an inductance inserted into the anode circuit of the amplifier stage (Fig. 1b). The present article is an analysis of the properties of the system shown in Fig. 1b. Neglecting the tube's internal resistance and the tube's output capacitance, the transmission factor of the system can be expressed as:

$$K(i\omega) = \frac{u_{outp}}{u_{inp}} = \frac{u_{outp}}{u_{ck}} \frac{u_{ck}}{u_{inp}} = K_a(i\omega)\, K_{ck}(i\omega), \qquad (1)$$

Card 1/6

APPROVED FOR RELEASE: 06/23/11: CIA-RDP86-00513R001134900005-6

APPROVED FOR RELEASE: 06/23/11: CIA-RDP86-00513R001134900005-6

Analysis of an amplifier... S/194/61/000/008/038/092
D201/D304

the transfer function β^1 of the f - b four-pole and of the internal resistance of the valve; 4) The gain control or frequency response compensation carried out inside the f - b four-pole does not affect in practice the output impedance; 5) The output impedance of amplifier may be adjusted by varying the f - b resistance which may be required for compensating design errors and to obtain perfect matching. A similar analysis, made for a circuit in which heavy feedback is applied around 3 stages, has shown that results obtained for a 2 stage amplifier remain valid, with two special provisions which are discussed. 2 references. [Abstracter's note: Complete translation] V13

Card 2/2

APPROVED FOR RELEASE: 06/23/11: CIA-RDP86-00513R001134900005-6

APPROVED FOR RELEASE: 06/23/11: CIA-RDP86-00513R001134900005-6

S/194/61/000/008/088/092
D201/D304

9.3240

AUTHOR: Mokhov, Ye.M.

TITLE: Analysis of an amplifier with transformer-bridge combined negative feedback circuit

PERIODICAL: Referativnyy zhurnal. Avtomatika i radioelektronika, no. 8, 1961, 16, abstract 8 K107 (Tr. uchebn. in-tov svyazi. M-vo svyazi SSSR, 1960, no. 3, 119-126)

TEXT: The derivation is given of fundamental design relationships for a group-amplifier with a transformer-bridge circuit of the combined feedback. The following has to be proved: 1) The gain and frequency response of the amplifier with heavy negative f - b is determined only by the parameters s of the f - b four-pole and of the output six-pole; 2) The gain is practically independent of supply voltage variations, of valves and of their ageing; 3) The output impedance of the heavy feedback amplifier is determined only by the parameters of the output six-pole and is independent both of

Card 1/2

APPROVED FOR RELEASE: 06/23/11: CIA-RDP86-00513R001134900005-6

APPROVED FOR RELEASE: 06/23/11: CIA-RDP86-00513R001134900005-6

APPROVED FOR RELEASE: 06/23/11: CIA-RDP86-00513R001134900005-6

APPROVED FOR RELEASE: 06/23/11: CIA-RDP86-00513R001134900005-6

MOKHOV, Ye. N. Cand Tech Sci -- (diss) " ~~Some questions~~ Certain problems on the theory, computation, and high-frequency correction of a cascade with a cathodic load in the ~~method~~ mode of amplification of impulses."

[Mos] 1957. 12 pp. (Min Communication USSR. Mos Electrical Engineering Inst of Communication.) 130 Copies.

(KL, 8-58, 106)

APPROVED FOR RELEASE: 06/23/11: CIA-RDP86-00513R001134900005-6

APPROVED FOR RELEASE: 06/23/11: CIA-RDP86-00513R001134900005-6

MOKHOV, V. S.

Mokhov, V. S. "Precision casting", Sbornik sokr. [illegible] tekhn. konf-tsii predpriyatiy mashinostroit. i metallobrabat. [illegible], Saratov, 194[illegible], p. [illegible]-87.

SO: U-3261, 10 April 53, (Letopis 'Zhurnal 'nykh statey, [illegible]).

APPROVED FOR RELEASE: 06/23/11: CIA-RDP86-00513R001134900005-6

APPROVED FOR RELEASE: 06/23/11: CIA-RDP86-00513R001134900005-6

TALANOV, P.I.; KVASHA, F.S.; MOKHOV, V.N.

Effect of thermal stresses in green molding mixtures [illegible] formation of shrinkage cavities. Izv. vys. ucheb. zav.: [illegible] met. 8 no.11:148-152 '65. (MIRA 18:[illegible])

1. Zavod-vtuz pri Moskovskom avtomobil'nom zavode im. Likhacheva.

APPROVED FOR RELEASE: 06/23/11: CIA-RDP86-00513R001134900005-6

APPROVED FOR RELEASE: 06/23/11: CIA-RDP86-00513R001134900005-6

S/179/60/000/006/020/036
E191/E135

On the Possibility of Applying the Equations of B.I. Davydov's Studies to Free Turbulence

The problem of the development with time of the separation layer is chosen as an example. At the initial instant, two semi-infinite fluid flows, moving in opposite directions at a certain velocity, come into contact over a plane. All the mean values will depend solely upon the time and the distance from the initial plane of contact. Using the derivations of Davydov, the present author shows that a solution of the free turbulence problem which agrees with experimental results cannot be obtained by the Davydov method in its present form. Acknowledgements are expressed to G.I. Barenblatt and B.I. Davydov for their assistance. There are 6 references: 3 Soviet and 3 non-Soviet.

SUBMITTED: March 16, 1960

Card 2/2

APPROVED FOR RELEASE: 06/23/11: CIA-RDP86-00513R001134900005-6

APPROVED FOR RELEASE: 06/23/11: CIA-RDP86-00513R001134900005-6

S/179/60/000/006/020/036
E191/E135

AUTHOR: Mokhov, V.N., (Moscow)

TITLE: On the Possibility of Applying the Equations of B.I. Davydov's Studies to Free Turbulence

PERIODICAL: Izvestiya Akademii nauk SSSR, Otdeleniye tekhnicheskikh nauk, Mekhanika i mashinostroyeniye, 1960, No. 6, pp. 125-126

TEXT: Referring to papers by B.I. Davydov (Refs 1, 2) it is recalled that certain assumptions on the relationship between the mean values in a fully developed turbulent flow have yielded a self-contained system of equations. The basic magnitudes are the mean velocity and pressure, the single point second and third moments of pulsating velocities and the turbulent energy dissipation. The equations contain three empirical constants derived by Davydov from comparison with experimental data. Steady state flow bounded by solid walls was used as the example for these derivations. An attempt is made in the present paper to apply the system of equations proposed by Davydov to a turbulent flow not bounded by solid walls (free turbulence).

Card 1/2

APPROVED FOR RELEASE: 06/23/11: CIA-RDP86-00513R001134900005-6

APPROVED FOR RELEASE: 06/23/11: CIA-RDP86-00513R001134900005-6

taken into account, i.e. according to the spin of the recoil nucleus J_f β as a function of the interaction constants:

$$J_f = 1 : \beta = \pm(|C_A|^2 - |C_T|^2)/(|C_A|^2 + |C_T|^2)$$

$$J_f = 0 : \beta = \pm(|C_V|^2 - |C_S|^2)/(|C_V|^2 + |C_S|^2)$$

The authors thank Ya. B. Zel'dovich for his interest and valuable advice. There are 7 references, 2 of which are Soviet.

SUBMITTED: November 25, 1958

APPROVED FOR RELEASE: 06/23/11: CIA-RDP86-00513R001134900005-6

APPROVED FOR RELEASE: 06/23/11: CIA-RDP86-00513R001134900005-6

states $F = J \pm 1/2$ separately (hyperfine splitting); this was done for the first time by Bernstein et al (Ref 3) for the normal muon capture by nuclei. Because of the conservation of spin in the system muon-nucleus, the nuclei themselves show partial polarization after depolarization of the mesons. Calculation of correlation in the case of the existence of a hyperfine structure is carried out for a nucleus with any spin J; the μ-meson polarized in the z-direction is assumed to be captured in the K-orbit of the nucleus. By means of the wave function describing the state of the meson formed, formulas are derived for the capture probability W_{F,F_z}. ($F = J \pm 1/2$, $F_z = M + 1/2$, the projection of the total momentum on to the z-axis). For the correlation function $W \sim 1 + \beta \cos \theta$ then holds. (θ = the angle between the original muon spin and the γ-momentum). For β formulas are in the following derived, which represent $C_A C_V$ and $C_S C_T$ and also M and J. With J = 0 the same results are obtained as in the case in which hyperfine splitting-up is not

APPROVED FOR RELEASE: 06/23/11: CIA-RDP86-00513R001134900005-6

APPROVED FOR RELEASE: 06/23/11: CIA-RDP86-00513R001134900005-6

24(5), 21(7)

AUTHORS: Gandel'man, G. M., Mokhov, V. N. SOV/56-36-5-33/76

TITLE: The Radiation Capture of a Polarized μ^--Meson by Nuclei (Radiatsionnyy zakhvat polyarizovannogo μ^--mezona yadrami)

PERIODICAL: Zhurnal eksperimental'noy i teoreticheskoy fiziki 1959, Vol 36, Nr 5, pp 1513-1516 (USSR)

ABSTRACT: In the case of the radiation capture of a polarized μ^--meson (internal bremsstrahlung) with non-conservation of parity, there is a correlation between the muon spin direction and the direction of the departure of the γ-quantum; the latter is investigated by the present paper. The experimental investigation of the asymmetry of the flying off γ-quanta offers a possibility of forming a decision concerning the nature of muon-nucleus interaction. The problem has already been investigated with respect to muon capture by protons by employing the two-component neutrino theory; Gershteyn and Zel'dovich (Ref 2) showed that total depolarization of the muon occurs in hydrogen, which is explained as being a consequence of a skip effect on the protons. However, it also proves necessary to consider muon depolarization as a result of muon- and nuclear spin, and to investigate the two possible

Card 1/3

APPROVED FOR RELEASE: 06/23/11: CIA-RDP86-00513R001134900005-6

APPROVED FOR RELEASE: 06/23/11: CIA-RDP86-00513R001134900005-6

APPROVED FOR RELEASE: 06/23/11: CIA-RDP86-00513R001134900005-6

APPROVED FOR RELEASE: 06/23/11: CIA-RDP86-00513R001134900005-6

Žurn.eksp.i teor.fis,31,fasc.5,842-844 (1956) CARD 2 / 2 PA - 1927

primary proton bundle and the summations occurring therein are carried out. The total differential cross section resulting therefrom is explicitly written down, and likewise the polarization found in this approximation. Next, the scattering cross section is investigated in second perturbational approximation. Also here the carrying out of summations and integrations is discussed in short. The integral cross section thus obtained is explicitly given. At $\beta = v/c = 0,6$ and at $\beta = 0,77$ polarization becomes equal to zero. Also for relative polarization an expression is written down. The condition of the applicability of the perturbation theory to the present case is $Ze^2/\hbar v \ll 1$. For relativistic protons this is equivalent to the condition Z/137. The formulae found here are applicable in the following angle interval: $\hbar/pR_{at} < \theta < Ze^2/\varepsilon_{nu}$. Here p denotes the momentum of the proton and R_{at} and R_{nu} apparently denote (although not expressly mentioned) the radius of the atom and of the nucleus respectively.
For angles which are larger than $Ze^2/\varepsilon R_{nu}$ nuclear scattering is of essential importance. Also small angles must be excluded as a result of screening off the COULOMB field by the atomic electrons. The results obtained are suited as a correction to polarization on the occasion of nuclear scattering.

INSTITUTION: Moscow Engineering-Physical Institute.

APPROVED FOR RELEASE: 06/23/11: CIA-RDP86-00513R001134900005-6

APPROVED FOR RELEASE: 06/23/11: CIA-RDP86-00513R001134900005-6

MOKHOV, V.N

SUBJECT USSR / PHYSICS CARD 1 / 2 PA - 1927

AUTHOR URIN, M.G., MOCHOV, V.N.

TITLE The Polarization of Relativistic Protons in the Case of COULOMB Scattering.

PERIODICAL Žurn.eksp.i teor.fis, 31, fasc.5, 842-844 (1956)

Issued: 1 / 1957

Here the amount of this polarization is determined by means of the perturbation theory. Only for weak and only little modifying electromagnetic fields the equation, which describes a particle with spin 1/2 and with the magnetic moment (which exists at $v \ll c$) $M_p = \alpha e \hbar / 2mc$ (m - mass of the proton, $\alpha = 2,79$) is the following: $\left\{ i\gamma_k (p_k - eA_k) + (1/2) i M' \gamma_k \gamma_l F_{kl} + m \right\} \Psi = 0$. Here A_k denotes the four-potential, F_{kl} - the tensor of the electromagnetic field, $M' = M_p - e/2m$. Throughout the present work it holds that $\hbar = c = 1$. For steady states it applies that $\mathcal{H} \Psi = \mathcal{E} \Psi$. For a COULOMB field ($\vec{A} = 0$; $A_4 = i\varphi = iZe/r$) it holds that $\mathcal{H} = i\beta \gamma \vec{p} + \beta m + e\varphi + M' \gamma \nabla \varphi$. As it is possible, from the vectors entering into the problem, to compose a suitable pseudovector, polarization in the direction of the scattering plane is equal to zero. Therefore the spin is analyzed in the vertical direction, on which occasion scattering is looked upon as elastic. Next, an expression for the differential scattering cross section is written down for that case in which the exterior field can be looked upon as a perturbation. This cross section is specialized for an unpolarized

APPROVED FOR RELEASE: 06/23/11: CIA-RDP86-00513R001134900005-6

APPROVED FOR RELEASE: 06/23/11: CIA-RDP86-00513R001134900005-6

MOKHOV, V.N.; URIN, M.G.

Auger effect in heavy atoms. Zhur. eksp. i teor. fiz. 30 no.1:209-210 Ja '56. (MLRA 9:7)

1.Moskovskiy inzhenerno-fizicheskiy institut.
(Auger effect)

APPROVED FOR RELEASE: 06/23/11: CIA-RDP86-00513R001134900005-6

APPROVED FOR RELEASE: 06/23/11: CIA-RDP86-00513R001134900005-6

APPROVED FOR RELEASE: 06/23/11: CIA-RDP86-00513R001134900005-6

APPROVED FOR RELEASE: 06/23/11: CIA-RDP86-00513R001134900005-6

26053
S/137/61/000/007/071/072
A060/A130

Corrosion of high impedance manganese-base alloy

NaCl solution. When cathodic current protection is used, ensuring a lowering of the electrode potential in 3 pc NaCl solution to -0.72 v, corrosion cracking is not observed.

Ye. Leyner

[Abstracter's note: Complete translation]

Card 2/2

APPROVED FOR RELEASE: 06/23/11: CIA-RDP86-00513R001134900005-6

APPROVED FOR RELEASE: 06/23/11: CIA-RDP86-00513R001134900005-6

26055
S/137/[illegible]/007/07[illegible]/072
A060/A10[illegible]

18.8310

AUTHORS: Mokhov, V. M.; Topchiashvili, [illegible]

TITLE: Corrosion of high impedance manganese-base alloy

PERIODICAL: Referativnyy zhurnal, Metallurgiya, [illegible] ("Tr. In-ta prikl. khimii i elektrokhimii, AN Gruz[illegible] 960, v. [illegible] 95-110)

TEXT: Alloys of electrolytic Mn with 15-22 pc Ni and 13-16 pc Cu were investigated. The process of corrosive destruction of the Mn alloy in solutions of chlorides, sulphates, nitrates, and carbonates was studied. Solutions of NaCl are the most corrosive. The tendency towards corrosive cracking is connected with the intragranular block structure of the alloy. The electrode potential of the Mn alloy in a 3 pc aqueous solution of NaCl drops with the application of tensile stresses in correspondence to the magnitude of applied load. Under corrosion testing the alloy potential gradually drops and at rupture always attains the same value (- 0.72 [illegible]. Cathodic protection by current of $\geqslant 400\,\mu a/cm^2$ [Abstracter's note: The original text read $400\mu \geqslant a/cm^2$ - an obvious misprint.] considerably increases the resistance of the alloy to corrosive cracking in 3 pc

Card 1/2

APPROVED FOR RELEASE: 06/23/11: CIA-RDP86-00513R001134900005-6

APPROVED FOR RELEASE: 06/23/11: CIA-RDP86-00513R001134900005-6

MOKHOV, V.M.; TOPCHIASHVILI, L.I.

Electrode potentials of the alloys of a manganese-copper-nickel system. Trudy Inst. prikl. khim. i elektrokhim. AN Gruz. SSR no. 1:87-93 '60. (MIRA 14:2)
(Electrochemistry) (Manganese-copper-nickel alloys)

APPROVED FOR RELEASE: 06/23/11: CIA-RDP86-00513R001134900005-6

APPROVED FOR RELEASE: 06/23/11: CIA-RDP86-00513R001134900005-6

PHASE I BOOK EXPLOITATION SOV/4535

Vsesoyuznyy sovet nauchno-tekhnicheskikh obshchestv

Mezhkristallitnaya korroziya i korroziya metallov v napryazhennom sostoyanii (Intercrystalline and Stress Corrosion of Metals) Moscow, Mashgiz, 1960. 358 p. 3,000 copies printed.

Ed.: I.A. Levin, Candidate of Technical Sciences; Ed. of Publishing House: I.I. Lesnichenko, Engineer; Tech. Ed.: V.D. El'kind; Managing Ed. for Literature on Metalworking and Instrument Making (Mashgiz): V.V. Rzhavinskiy, Engineer; Editorial Board: I.A. Levin, Candidate of Technical Sciences (Chairman), V.P. Batrakov, Candidate of Technical Sciences, V.M. Nikiforova, Candidate of Technical Sciences, and A.V. Turkovskaya, Candidate of Technical Sciences.

PURPOSE: This collection of articles is intended for technical personnel concerned with problems of corrosion of metals.

COVERAGE: The collection contains discussions of intercrystalline corrosion of stainless steels and stress corrosion of carbon steels, low-alloy and stainless steels, and light-weight and nonferrous alloys. The tendency of steels of various composition and system to corrode under certain conditions is discussed and the nature of corrosion and corrosion cracking is analyzed. No personalities are mentioned. Most of the articles are accompained by bibliographic references, the majority of which are Soviet.

V. STRESS CORROSION OF LIGHTWEIGHT AND NONFERROUS ALLOYS

Tomashov, N.D., Doctor of Chemical Sciences, Professor, and V.N. Modestova, Candidate of Chemical Sciences. Effect of Stress on the Corrosion and Potentials of the Magnesium-Manganese Alloy System 275

Timonova, M.A., Candidate of Technical Sciences. The Nature of Corrosion Cracking of Magnesium Alloys and Protective Measures 289

Romanov, V.V., Candidate of Chemical Sciences. Effect of Certain Factors on the Tendency of Magnesium Alloys Toward Corrosion Cracking 312

Mozhov, N.M. Stress Corrosion of the High Electrical Resistance Manganese-Base Alloy 318

Volchkova, L.M., V.D. Plyasunov, and A.I. Krasil'shchikov. Effect of Mechanical Strains on the Electrode Potential of Copper 321

Bobylev, A.V., Candidate of Technical Sciences. The Tendency of Copper Alloys to Crack Depending Upon Their Composition 329

Klark, G.B., Candidate of Chemical Sciences. Corrosion Cracking of Brass in Various Climatic Zones of the USSR 345

[Otdel korrozii Instituta fizicheskoy khimii AN SSSR (Corrosion Department of the Institute of Physical Chemistry AS USSR) and Giprotsvetmetobrabotka (State Design and Planning Scientific Research Institute for Working of Nonferrous Metals) conducted joint research on this subject. A. Ye. Gopius, Candidate of Technical Sciences and Yu. A. Smirnova, Senior Scientific Worker, participated in the work on behalf of the latter institute.]

Gopius, A. Ye., Candidate of Technical Sciences, and Yu. A. Smirnova, Senior Scientific Worker. On the Problem of Short-Time Testing of Brass Resistance to Corrosion Cracking 349

Zalashnikov, S. I. and N. P. Klchin, Engineers. Detection of Intercrystalline Corrosion in Aluminum Alloys with the Dye Penetrant Flaw Detection Method. 33

[illegible] by Measuring the Internal Friction 152

Card 4/9

MOKHOV, V.M.

APPROVED FOR RELEASE: 06/23/11: CIA-RDP86-00513R001134900005-6

APPROVED FOR RELEASE: 06/23/11: CIA-RDP86-00513R001134900005-6

SOV/78-3-11-18/23

The Investigation of the Alloys of the System Manganese-Copper-Cobalt

case of a further increase in the cobalt content the hardness is increased and the alloys become extremely solid and brittle. The determination of the electric resistance was carried out by means of the potentiometer of the type PPTV 1. Comparatively higher values of the electric resistance occur in alloys with 20-30% cobalt. These alloys are of no practical interest, since they are not plastic. The dilatometric investigations in the ternary systems show that an intermediate phase occurs in alloys with 5-10% cobalt which is characterized by an anomalous expansion in the temperature range of 350-650°C.
There are 6 figures, 4 tables, and 5 references, 3 of which are Soviet.

ASSOCIATION: Institut prikladnoy khimii i elektrokhimii Akademii nauk Gruzinskoy SSR (Institute of Applied Chemistry and Electrochemistry, AS Gruzinskaya SSR)

SUBMITTED: July 22, 1957

Card 2/2

APPROVED FOR RELEASE: 06/23/11: CIA-RDP86-00513R001134900005-6

APPROVED FOR RELEASE: 06/23/11: CIA-RDP86-00513R001134900005-6

SOV/78-3-11-18/23

AUTHORS: Topchiashvili, L. I., Agladze, R. I., Mokhov, V. M.

TITLE: The Investigation of the Alloys of the System Manganese-Copper-Cobalt (Issledovaniye splavov sistemy marganets-med'-kobal't)

PERIODICAL: Zhurnal neorganicheskoy khimii, 1958, Vol 3, Nr 11, pp 2537-2544 (USSR)

ABSTRACT: The system manganese-copper-cobalt and above all ternary systems enriched with manganese were investigated. Purest electrolytical manganese, copper, and cobalt with a purity of 99,15% were the initial materials for the production of the alloys. The microstructure, hardness, electric resistance, and the dilatometric analysis of the samples were investigated. From the investigation of the microstructure the authors concluded that the addition of cobalt does not stabilize the γ and heat resistive solution. The manganese alloys of the ternary system manganese-copper-cobalt (up to 50% manganese) represent bi-phase mixtures ($\gamma + \alpha$Mn). The hardness of the alloys showed that the γ-phase is not stabilized in the manganese-cobalt-alloys with less than 50% cobalt. In alloys with 65 and 70% manganese and 10% cobalt an unimportant reduction of the hardness takes place. In the

Card 1/2

APPROVED FOR RELEASE: 06/23/11: CIA-RDP86-00513R001134900005-6

APPROVED FOR RELEASE: 06/23/11: CIA-RDP86-00513R001134900005-6

SOV/78-3-10-21/23

Phase Transformation in the System Manganese-Copper-Iron

the ternary system show that an addition of iron does not stabilize the γ-solid solution. All alloys containing 50-100% manganese are two-phase mixtures of $\gamma + \alpha$ Mn. The electric resistance was measured by means of the potentiometer of the PPTV -1 type. The results of the determinations of the electric resistance are presented in table 3. The transformation $\alpha \rightarrow \beta$ manganese in the binary alloy Mn-Cu could not be found by dilatometric investigations. However, a transformation of that kind can easily be observed by a dilatometric investigation of the binary alloy Fe-Mn. It follows from these investigations that an addition of iron to manganese alloys does not exert any influence upon the stabilization of the γ-solid solution, but causes the intense decomposition of this phase on a decrease in temperature under the formation of the α-manganese phase, due to which the alloys become crackly. There are 5 figures, 3 tables, and 6 references, 3 of which are Soviet.

ASSOCIATION: Institut prikladnoy khimii i elektrokhimii Akademii nauk Gruzinskoy SSR (Institute of Applied Chemistry and Electrochemistry of the Academy of Sciences, Gruzinskaya SSR)

Card 2/2

SUBMITTED: July 22, 1957

APPROVED FOR RELEASE: 06/23/11: CIA-RDP86-00513R001134900005-6

APPROVED FOR RELEASE: 06/23/11: CIA-RDP86-00513R001134900005-6

SOV/78-3-10-21/35

AUTHORS: Agladze, R. I., Topchiashvili, L. I., Mokhov, V. K.

TITLE: Phase Transformation in the System Manganese-Copper-Iron (Fazovyye prevrashcheniya v sistseme marganets-med'-zheleso)

PERIODICAL: Zhurnal neorganicheskoy khimii, 1958, Vol 3, Nr 10, pp 2354-2360 (USSR)

ABSTRACT: In the present paper the action of iron on the structure and properties of alloys obtained from manganese and copper was investigated. The alloys in the manganese corner of the ternary system manganese-copper-iron were investigated within the concentration range of 50-100% Mn. The initial materials used for the production of these alloys had a purity of 99,6%. The investigations of the alloys dealt with the microstructure, electric resistance and dilatometric analysis. In the alloys containing 60-90% manganese and the same quantities of copper and iron, the microstructure corresponds to the eutectoid type. This structure was probably caused by the decomposition of the β-manganese phase. A dendritic structure occurs in alloys containing 50-60% manganese, after their gradual cooling. The investigations of the microstructures in the manganese corner of

Card 1/2

APPROVED FOR RELEASE: 06/23/11: CIA-RDP86-00513R001134900005-6

APPROVED FOR RELEASE: 06/23/11: CIA-RDP86-00513R001134900005-6

L 45966-66
ACC NR: AT6030697

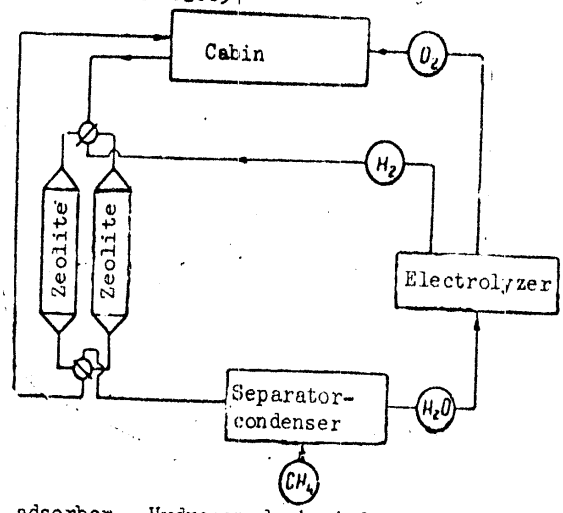

Fig. 2. Schematic diagram of a physical-chemical air "regeneration" system using B-zeolite

adsorber. Hydrogen derived from electrolysis is then passed through zeolite in a second adsorber, simultaneously desorbing CO_2 and reducing it to water and methane. The water is electrolyzed as in the first system. Temperature regulation is very important for the successful operation of this system, since a 7—12C temperature variation alters the gas conversion level by 10—15%. Orig. art. has: 3 figures. [JS]

SUB CODE: 06/ SUBM DATE: 14Apr66/ ATD PRESS: 5086

Card 3/3 hs

APPROVED FOR RELEASE: 06/23/11: CIA-RDP86-00513R001134900005-6

APPROVED FOR RELEASE: 06/23/11: CIA-RDP86-00513R001134900005-6

L 45966-66

ACC NR: AT6030697

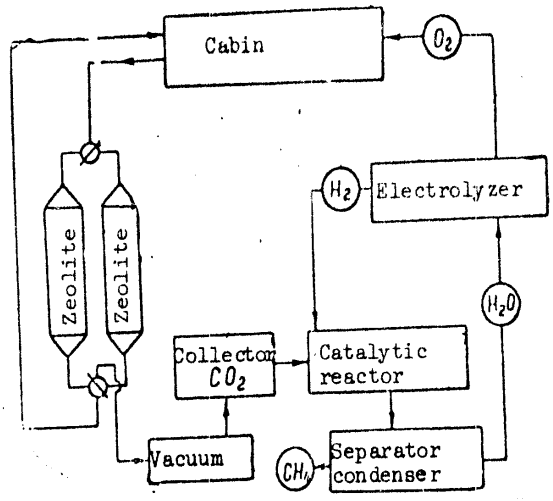

Fig. 1. Schematic diagram of a physical and chemical air "regeneration" system

can be used in such a system for both sorption and catalysis, retaining its properties through a number of cycles. An improved air "regeneration" scheme using B-zeolite is shown in Fig. 2. Cabin air is purified by passing through a B-zeolite

Card 2/3

APPROVED FOR RELEASE: 06/23/11: CIA-RDP86-00513R001134900005-6

APPROVED FOR RELEASE: 06/23/11: CIA-RDP86-00513R001134900005-6

L 45966-66 EWT(1)/EWT(m) SCTB JKT/DD/RD/JT/GD/JXT(CZ)

ACC NR: AT6030697 SOURCE CODE: UR/0000/66/000/000/0081/0084

AUTHOR: Cherkasov, V. K.; Ushakova, G. S.; Piguzova, L. I.; Devyatko, A. V.; Mokhov, V. G.; Solov'yev, V. I.; Portnova, K. M.; D'yakonov, R. V.; Martynova, R. A.; Ratts, L. B.

ORG: none

TITLE: The possibility of using the multifunctional properties of zeolites in a physical and chemical air-regeneration system

SOURCE: Konferentsiya po kosmicheskoy biologii i meditsine, 1964. Materialy. Moscow, Inst. mediko-biol. problem, 1966, 81-84

TOPIC TAGS: life support system, closed ecological system, space biology

ABSTRACT: A physical-chemical air "regeneration" system which has been proposed for manned spaceflight is shown in Fig. 1. In this system CO_2 is removed from cabin air by adsorption on zeolite. The carbon dioxide then undergoes vacuum desorption from the zeolite and passes through a CO_2 collector to the catalytic reactor, where it is reduced with hydrogen from the electrolyzer to water and methane. The water returns to the electrolyzer and is broken down into oxygen (used for human respiration) and hydrogen. The disadvantages of this method are the difficulties of creating a vacuum on board a spacecraft and the additional electrical energy required to operate the CO_2 collector. Studies have shown that specially treated B-zeolite

Card 1/3

APPROVED FOR RELEASE: 06/23/11: CIA-RDP86-00513R001134900005-6

APPROVED FOR RELEASE: 06/23/11: CIA-RDP86-00513R001134900005-6

MOKHOV, V. A., CAND AGR SCI, "~~AGROTECHNICAL PROCEDURES~~ Agricultural [illegible] ~~FOR~~ CONTROLLING the DEGENERATION OF POTATOES UNDER the CONDITIONS OF IRRIGATION ~~FARMING~~ agr IN THE SUBURBAN ~~[illegible]~~ area OF KARAGANDA." ALMA-ATA, 1961. (MIN OF HIGHER AND SEC SPEC ED KAZSSR, KAZAKH AGR INST). (KL, 3-61, 226).

APPROVED FOR RELEASE: 06/23/11: CIA-RDP86-00513R001134900005-6

APPROVED FOR RELEASE: 06/23/11: CIA-RDP86-00513R001134900005-6

Mokhov V. A.

MOKHOV, V.A., starshiy nauchnyy sotrudnik.

Effect of planting time on the setting of potato berries. Agrobiologiia no.4:157 Jl-Ag '57. (MIRA 10:9)

1. Karagandinskaya sel'skokhozyaystvennaya opytnaya stantsiya (Potato breeding)

APPROVED FOR RELEASE: 06/23/11: CIA-RDP86-00513R001134900005-6

APPROVED FOR RELEASE: 06/23/11: CIA-RDP86-00513R001134900005-6

9 (6)

SOV /112-57-5-10718

Translation from: Referativnyy zhurnal. Elektrotekhnika, 1957, Nr 5, p 162 (USSR)

AUTHOR: Shuvalov, V. A., Mokhov, V. A.

TITLE: Electronic Wire-Break Detector (Elektronnyy fiksator obryva provoda)

PERIODICAL: Obmen opytom. M-vo radiotekhn. prom-sti SSSR, 1955, Nr 4, pp 3-5

ABSTRACT: Bibliographic entry.

Card 1/1

APPROVED FOR RELEASE: 06/23/11: CIA-RDP86-00513R001134900005-6

APPROVED FOR RELEASE: 06/23/11: CIA-RDP86-00513R001134900005-6

(Spillway)

APPROVED FOR RELEASE: 06/23/11: CIA-RDP86-00513R001134900005-6

APPROVED FOR RELEASE: 06/23/11: CIA-RDP86-00513R001134900005-6
(Spillways)

APPROVED FOR RELEASE: 06/23/11: CIA-RDP86-00513R001134900005-6

APPROVED FOR RELEASE: 06/23/11: CIA-RDP86-00513R001134900005-6

MOKHOV, S.A., inzh.

Energy absorption through the impact of currents. [illegible] [illegible]; strei. no.4:201-[illegible]. (MIRA [illegible])

1. Rekomendovana kafedrom gidrotekhnicheskikh sooruzheniy Moskovskogo inzhenerno-stroitel'nogo instituta imeni. V.V. Kuybyshevo.
(Hydraulics)

APPROVED FOR RELEASE: 06/23/11: CIA-RDP86-00513R001134900005-6

APPROVED FOR RELEASE: 06/23/11: CIA-RDP86-00513R001134900005-6

MIKHAYLOV, B.V., kandidat tekhnicheskikh nauk; MOKHOV, S.A., inzhener.

Calculating the median coefficient of heat conduction in concrete slabs. Bet.i zhel.-bet. no.6:224 Je '56. (MLRA 9:3)
(Concrete slabs) (Heat--Transmission)

APPROVED FOR RELEASE: 06/23/11: CIA-RDP86-00513R001134900005-6

APPROVED FOR RELEASE: 06/23/11: CIA-RDP86-00513R001134900005-6

"Influence of chemical a
Diesel engine"

report presented at the conference on Combustion and Formation of the Mixture in Diesel Engines, convened by the Motor Laboratory, Acad. Sci. USSR, Moscow 10-12 June 1958.
(Vest. Ak Nauk SSSR, 1958, No. 9, 115-117)

APPROVED FOR RELEASE: 06/23/11: CIA-RDP86-00513R001134900005-6

APPROVED FOR RELEASE: 06/23/11: CIA-RDP86-00513R001134900005-6

S/081/61/000/011/022/030
B117/B203

Effect of additives on...

cracking fuel. In general, the effect of the additive is the higher, the longer is the ignition lag of the basic fuel, which applies to fuels rich in aromatic hydrocarbons. [Abstracter's note: Complete translation.]

Card 2/2

APPROVED FOR RELEASE: 06/23/11: CIA-RDP86-00513R001134900005-6

APPROVED FOR RELEASE: 06/23/11: CIA-RDP86-00513R001134900005-6

S/081/61/000/014/022/030
B117/B203

AUTHOR: Mokhov, R. M.

TITLE: Effect of additives on the ignition lag of diesel fuels

PERIODICAL: Referativnyy zhurnal. Khimiya, no. 14, 1961, 539, abstract 14M224. (Sb. Sgoraniye i smese-obrazovaniye v dizelyakh. M., AN SSSR, 1960, 82 - 89)

TEXT: On a single-cylinder section of a Д-6 (D-6) engine, and on an ИТ9-3 (IT9-3) engine, the author studied the effect of additives raising the octane number of diesel fuels on the operation of the engine. He tested four types of alkyl nitrates and three types of hydroperoxides in the fuels ДС (DS), ДЗ (DZ), and ДЛ (DL) according to ГОСТ 4749-49 (GOST 4749-49), as well as in a fuel composed of phlegm and naphtha obtained by the cracking of the petroleum - gas oil fraction and by catalytic refining of the broad fraction. The effect of additives was shown to depend on the property of the basic fuel. The first 0.5 - 1.0% of additives have the strongest effect on ignition lag and kinetics of the subsequent combustion. An increase in the additive concentration up to 2.0 - 3.0% does not change the indicator curve any more. The effect of the additive is strongest in

Card 1/2

APPROVED FOR RELEASE: 06/23/11: CIA-RDP86-00513R001134900005-6

APPROVED FOR RELEASE: 06/23/11: CIA-RDP86-00513R001134900005-6

Additives for S-Diesel Fuels for Lowering the Wear of the Engine Cylinders

65-58-4-11/12

corrosion. In the case of S-containing diesel oils, the scale formation on the piston was hardly affected. The quantity of deposits on the piston was practically the same. There are 2 Figures, 2 Tables and 4 Russian References.

1. Diesel fuels-Additives-Test methods 2. Diesel fuels-Additives-Test results

Card 3/3

APPROVED FOR RELEASE: 06/23/11: CIA-RDP86-00513R001134900005-6

APPROVED FOR RELEASE: 06/23/11: CIA-RDP86-00513R001134900005-6

65-58-4-11/12

Additives for S-Diesel Fuels for Lowering the Wear of the Engine Cylinders

Laboratory for Machine Testing AS USSR (Laboratoriya mashinovedeniya AN SSSR) was used. The experiments were carried out in three stages. In each experiment one of three types of fuels was used: (1) the standard fuel with low S content (GOST 4749-49), (2) standard S-containing fuel (GOST-305-42), (3) the standard S-containing fuel (GOST-305-42), S = 0.97%, with 0.3 zinc naphthenate. The zinc naphthenate was prepared in the AzNII, and contained about 8% of zinc. Table 1 gives the physicochemical properties of the tested fuels. The addition of 0.3% zinc naphthenate causes increased formation of coke, ash and increased acidity. Table 2: composition of the fuels. These experiments were carried out on the MT-10P (GOST 6360-52) standard oil. The maximum wear occurred in the upper part of the cylinder and was 8-10 mk. The diagram in fig.2 shows the wear of the cylinder when the three types of fuel were used. The maximum wear of the cylinder occurs at a distance of 10-20 mm from the upper surface of the first piston ring (16 mk). It is concluded that additives lower the

Card 2/3

APPROVED FOR RELEASE: 06/23/11: CIA-RDP86-00513R001134900005-6

APPROVED FOR RELEASE: 06/23/11: CIA-RDP86-00513R001134900005-6

MOKHOV, R. M.

AUTHOR: Mokhov, R. M. 05-58-4-11/12

TITLE: Additives for S - Diesel Fuels for Protection of the Engine Cylinders (Prisadki k sernistomu dizel'nomu toplivu, snizhayushchaya iznosy tsilindrov)

PERIODICAL: Khimiya i Tekhnologiya Topliv i Masel, 1958, No. 4, pp 82 - 86 (USSR)

ABSTRACT: Various compounds are added to oils to neutralize the combustion products. Additives such as NARC, AZNII - tsiatim-1, tsiatim-339 (GOST 5713-47) inhibit coke formation and also decrease the wear. Tsiatim-339 is recommended for diesel engines using S-fuels. Considerable neutralisation of the combustion products of the S compounds in the fuels takes place when about 3% of tsiatim-339 is added to diesel oils containing up to 1% of S. A method for adding zinc naphthenate was developed by AZNII NP in. V. V. Kuybyshev. When zinc naphthenate is added to diesel fuels, zinc compounds are formed after combustion, which settle on the combustion chamber and protect it against the corrosive action of the combustion products. Experiments were carried out on the effectiveness of zinc naphthenate in lowering the corrosion wear of the cylinder of the 2D6 diesel engine when fuel containing 1% of sulphur was used. The method developed by the

Card 1/3

APPROVED FOR RELEASE: 06/23/11: CIA-RDP86-00513R001134900005-6

APPROVED FOR RELEASE: 06/23/11: CIA-RDP86-00513R001134900005-6

APPROVED FOR RELEASE: 06/23/11: CIA-RDP86-00513R001134900005-6

APPROVED FOR RELEASE: 06/23/11: CIA-RDP86-00513R001134900005-6

MOKHOV, P.D.; KAPIENKOV, I.F.; MARGOLIN, S.F.

Combined hydraulic press system. Kuz.-shtam. proizv. 3 no.3:35-36 Mr '61. (MIRA 14:6)

(Hydraulic presses)

APPROVED FOR RELEASE: 06/23/11: CIA-RDP86-00513R001134900005-6

APPROVED FOR RELEASE: 06/23/11: CIA-RDP86-00513R001134900005-6

KRIVOSHEYEV, V.A.; MOKHOV, P.D.; DAVYDOVA, N.I.

Equipment for the making of large cores. Lit. proizv. no. 2:25 F '61. (MIRA 14:4)

(Coremaking) (Foundries--Equipment and supplies)

APPROVED FOR RELEASE: 06/23/11: CIA-RDP86-00513R001134900005-6

APPROVED FOR RELEASE: 06/23/11: CIA-RDP86-00513R001134900005-6

MOKHOV, P.D.; DAVYDOVA, N.I.; KAPLENKOV, I.F.

Modernization of the ShD-12 tenoner. Der.prom. 9 no.8:23 Ag '60. (MIRA 13:8)

(Woodworking machinery)

APPROVED FOR RELEASE: 06/23/11: CIA-RDP86-00513R001134900005-6

APPROVED FOR RELEASE: 06/23/11: CIA-RDP86-00513R001134900005-6

MOKHOV, P.D.; KAPLENKOV, I.F.; RUDENCK, P.P.

Boring bar for boring cylinders. Mashinostroitel' no.9:28 S '60.
(MIRA 13:9)
(Drilling and boring machinery--Attachments)

APPROVED FOR RELEASE: 06/23/11: CIA-RDP86-00513R001134900005-6

APPROVED FOR RELEASE: 06/23/11: CIA-RDP86-00513R001134900005-6

MOKHOV, P.D.; KAPLENKOV, I.F.

Output of the press has been doubled. Mashinostroitel' no.5:15 My '60. (MIRA 14:5)

(Hydraulic presses--Technological innovations)

APPROVED FOR RELEASE: 06/23/11: CIA-RDP86-00513R001134900005-6

APPROVED FOR RELEASE: 06/23/11: CIA-RDP86-00513R001134900005-6

BURIMSKIY, Yu.M.; MOKHOV, P.D.

Regulated boring holder. Mashinostroitel' no.3:15 Mr '60. (MIRA 13:6)
(Drilling and boring machinery--Attachments)

APPROVED FOR RELEASE: 06/23/11: CIA-RDP86-00513R001134900005-6

APPROVED FOR RELEASE: 06/23/11: CIA-RDP86-00513R001134900005-6

MOKHOV, P. D.

AUTHOR: Krivosheyev, V.A. and Mokhov, P.D. [illegible]

TITLE: The Hydrorivetting Machine (Gidroklepalinaya mashina)

PERIODICAL: Avtomobilinaya Promyshlennost', 1958, No 5, pp [illegible] (USSR)

ABSTRACT: This machine was constructed and delivered to the industry by the Minskiy Avtozavod (Minsk Automobile Plant). It is used for noiseless riveting of parts of the automobile body with cold or heated rivets. The formation of the locking head of a rivet is achieved by the gradual compression of the rod around the head. Owing to the small dimensions of the machine it does not need any special stand, and can be placed either on the floor or at any needed height. There is 1 photo, 1 table and 1 graph.

ASSOCIATION: Minskiy Avtozavod (The Minsk Automobile Plant)
Lesotekhnicheskiy Institut (The Institute of Technical Forestry)

AVAILABLE: Library of Congress

Card 1/1 1. Automobile industry-Production methods

APPROVED FOR RELEASE: 06/23/11: CIA-RDP86-00513R001134900005-6

APPROVED FOR RELEASE: 06/23/11: CIA-RDP86-00513R001134900005-6

GUBKIN, S.I.; YUSHKOV, V.A.; MOKHOV, P.D.

Effect of temperature on changes in the mechanical properties of 20Kh, 12KhNZA and 18KhGT steels. Sbor.nauch.trud.Fiz.-tekh.inst. AN BSSR no.1:15-25 '54. (MLRA 10:1)

(Steel alloys--Testing) (Metals, Effect of temperature on)

APPROVED FOR RELEASE: 06/23/11: CIA-RDP86-00513R001134900005-6

APPROVED FOR RELEASE: 06/23/11: CIA-RDP86-00513R001134900005-6

MOKHOV, P. D.

Dissertation: "Investigation of the Deformability of Alloy Steel Used in the Motor and Tractor Industry." Cand Tech Sci, Belorussian Polytechnic Inst, Minsk, 1954.
(Referativnyy Zhurnal--Mekhanika, Moscow, June 54)

SO: SUM 318, 23 Dec. 1954

APPROVED FOR RELEASE: 06/23/11: CIA-RDP86-00513R001134900005-6

APPROVED FOR RELEASE: 06/23/11: CIA-RDP86-00513R001134900005-6

A Method for the Investigation of Amplifier Diagrams By Means of Equations of Third Order Within Range of Short Periods of Time. 105-5-8/13

Here $G = \frac{Ax+B}{Mx+N} - \beta$ and $H = \frac{Ex+F}{(Mx+N)\beta}$. There is, therefore, no necessity of solving equations of third order. Only the last parameter changes unsystematically but this does not is an obstacle for the complete systematization of the results. What parameter- and root values must be assumed in order to reach the range of optimum transfer-characteristics (OTC) has still to be explained. This is done by means of Vyshnegradskiy's diagram This deagram is also used for the determination of the initial values of the parameters and of the real root. Data on the general order of the investigation of a diagram as well as a practical example are given. (With 7 illustrations, 1 table and 4 Slavic references).

ASSOCIATION Not Given.
PRESENTED BY
SUBMITTED 30.12.1956
AVAILABLE Library of Congress
Card 2/2

APPROVED FOR RELEASE: 06/23/11: CIA-RDP86-00513R001134900005-6

APPROVED FOR RELEASE: 06/23/11: CIA-RDP86-00513R001134900005-6

AUTHOR MOKHOV N.Ye. 108-5-8/13

TITLE A Method for the Investigations of Amplifier Diagrams By Means of Equations of Third Order Within Range of Short Periods of Time. (Metod issledovaniya usilitel'nykh skhem s kharakteristicheskimi uravneniyami tret'yey stepeni v oblasti malykh vremen. - Russian)

PERIODICAL Radiotekhnika, 1957, Vol 12, Nr 5, pp 54 - 61 (U.S.S.R.)

ABSTRACT A new method is suggested which consists of the following: When all parameters, with the exception of a parameter x, are given, the characteristic equation reads as follows: $N(p)=(Mx+N)p^3+(Ax+B)p^2+(Cx+D)p+(Ex+F)=0$, where M,N,A,B....F are the coefficients which can be determined according to the diagram-parameters which are known as regards their number. The coefficients of this equations are connected with its radicals it as follows:

$$\frac{Ax+B}{Mx+N} = -(p_1+p_2+p_3) \qquad \frac{Cx+D}{Mx+N} = p_1p_2+p_2p_3+p_3p_1 \qquad \frac{Ex+F}{Mx+N} = -p_1p_2p_3$$

This system of equations contains 3 equations with 4 variables. One of them must be given, the other two are computed. The essential feature of this method is that the value of the real radical is assumed to be $p_1 = -\beta$. The last parameter is then obtained by means of the following formula:

$$x = \frac{\beta^3N - \beta^2B + \beta D - F}{-\beta^3M + \beta^2A - \beta C + E}$$

The equation $p^2 + Gp + H = 0$ must be solved in order to find the other two roots.

Card 1/2

APPROVED FOR RELEASE: 06/23/11: CIA-RDP86-00513R001134900005-6

APPROVED FOR RELEASE: 06/23/11: CIA-RDP86-00513R001134900005-6

MOKHOV, N.V.; LABKOVSKIY, Ya.M.

X-ray diffraction study of the isothermal compressibility of ether and benzene. Ukr. fiz. zhur. 7 no.8:816-832 S '62. (MIRA 16:1)

1. Dnepropetrovskiy universitet.
(X rays--Diffraction) (Ether) (Benzene)

APPROVED FOR RELEASE: 06/23/11: CIA-RDP86-00513R001134900005-6

APPROVED FOR RELEASE: 06/23/11: CIA-RDP86-00513R001134900005-6

Temperature

with increasing temperature. This results in reduced variations at higher temperatures. The curve represented in Fig. 5 was plotted from the calculated variation intensities. With increasing distance from the critical temperature, variation decreased rapidly. There are 5 figures, 1 table, and 4 references: 2 Soviet and 2 US.

ASSOCIATION: Dnepropetrovskiy gosudarstvennyy universitet (Dnepropetrovsk State University)

SUBMITTED: October 12, 1958

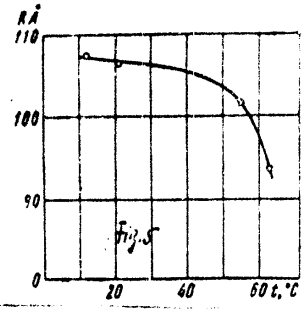

Card 2/2

APPROVED FOR RELEASE: 06/23/11: CIA-RDP86-00513R001134900005-6

APPROVED FOR RELEASE: 06/23/11: CIA-RDP86-00513R001134900005-6

AUTHORS: Mokhov, N. V. and Kirsh, I. V.

TITLE: X-Ray Study of the Change of the Degree of Concentration Variation in the System Carbon Disulfide - Methyl Alcohol as a Function of Temperature

PERIODICAL: Zhurnal fizicheskoy khimii, 1960, Vol. 34, No. 7, pp. 1553-1555

TEXT: The X-ray study of solutions with an upper critical solution temperature (Refs.1, 2) showed structural inhomogeneities in the neighborhood of critical temperature. This must lead to an uneven distribution of electron density. Therefore, the intensity of this concentration variation should be established by small-angle X-ray scattering. For this purpose, the binary liquid system carbon disulfide - methyl alcohol with a molar ratio of 1 : 5 (32% by weight of CS_2) was investigated at 12°, 21°, 55°, and 63°C. Because of the high absorption capacity of CS_2, molybdenum radiation was used. Distinct periodic maxima were found on the interference curves of small-angle X-ray scattering. These maxima shifted toward greater angles

Card 1/2

APPROVED FOR RELEASE: 06/23/11: CIA-RDP86-00513R001134900005-6

APPROVED FOR RELEASE: 06/23/11: CIA-RDP86-00513R001134900005-6

of concentration fluctuations in I and II at temperatures equidistant from the saturation temperature, shows that an increase of concentration entails a decrease in the range of fluctuations.

N. Andreyev

[Abstracter's note: Complete translation]

Card 2/2

APPROVED FOR RELEASE: 06/23/11: CIA-RDP86-00513R001134900005-6