"APPROVED FOR RELEASE: 07/12/2001 CIA-RDP86-00513R001135220010-6

31115
S/590/61/[illegible]
D040/D1[illegible]

The effect of machining ...

Sixteen blades were tested, 12 of which broke or cracked. The [illegible] the machining method or class did not really effect the mechanical strength of the blades, and class 6 finish may be used for the blade work portion. As seen from photomicrographs, cracks initiated and propagated along the grain boundaries only, and were not created by grain displacements caused by machining. Measurements of surface roughness with a ПЧ-2 (PCh-2) profilometer and Linnik's double microscope revealed that turned and milled blades with class 6 finish retained the initial finish for 300 hours. However, [illegible] blades of the same class started losing their finish after 300 hours. [illegible] ground blades with class 6 finish even from the first hours of testing. Polished class 9 surface deteriorated rapidly from the first hours. [illegible] is made to previous research conducted by the author [illegible] observed on blade models of ЭИ 61[illegible] (EI61[illegible]), ЭИ 67[illegible] (EI67[illegible]) and ЭИ [illegible] alloys. In general, the finish of EI765 alloy blades changed [illegible] the finer the initial finish, the more it was spoiled. Polished [illegible] a lower erosion resistance than turned and milled surfaces. Con[illegible] High-class finish on the work portion of gas turbine blades is unnecessary and class 6 may safely be used. Correspondingly amended requirements [illegible]

2/4

APPROVED FOR RELEASE: 07/12/2001 CIA-RDP86-00513R001135220010-6"

"APPROVED FOR RELEASE: 07/12/2001 CIA-RDP86-00513R001135220010-6

31115
S/590/61/102/000/002/005
D040/D113

The effect of machining ...

considerably cut the blades' production time and facilitate full mechanization of the machining process. Besides, special blade-finishing machines could be dispensed with. There are 12 figures, 3 tables and 1 Soviet reference.

Card 3/4

X

APPROVED FOR RELEASE: 07/12/2001 CIA-RDP86-00513R001135220010-6"

"APPROVED FOR RELEASE: 07/12/2001 CIA-RDP86-00513R001135220010-6

31115
S/590/61/102/000/002/005
D040/D113

The effect of machining ...

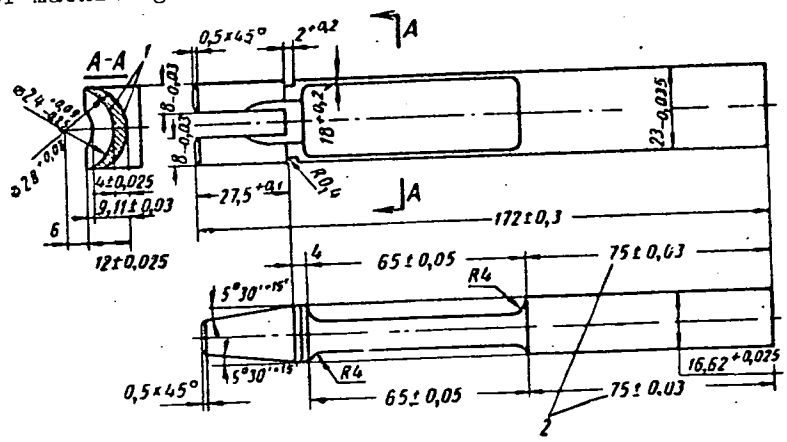

Fig. 1. Drawing of a blade:
1 - machining of the work portion in accordance with Ty (TU) specifications;
2 - the tolerance for the dimensions 75 mm is 0.03 mm on the convex and concave sides of the blade.

Card 4/4

APPROVED FOR RELEASE: 07/12/2001 CIA-RDP86-00513R001135220010-6"

"APPROVED FOR RELEASE: 07/12/2001 CIA-RDP86-00513R001135220010-6

ACC NR: AP6036961 (A, N) SOURCE CODE: UR/0181/66/008/011/3218/3225

AUTHOR: Ivanov, I. V.; Morozov, N. A.

ORG: Moscow State University im. M. V. Lomonosov (Moskovskiy gosudarstvennyy universitet)

TITLE: Method of studying the dynamic nonlinearity of ferroelectrics in superhigh frequency fields

SOURCE: Fizika tverdogo tela, v. 8, no. 11, 1966, 3218-3225

TOPIC TAGS: superhigh frequency, ferroelectric material

ABSTRACT: The paper describes an experimental method of studying the nonlinear properties of ferroelectric materials in SHF fields which makes it possible to determine the first coefficients of a series expansion of the permittivity in powers of the SHF electric field

$$\varepsilon(E, E_0) = \varepsilon(E_0)(1 + \alpha_1 E + \alpha_2 E^2 + \dots), \quad (1)$$

where $\varepsilon(E_0)$ is the permittivity of the material studied at a given strength of the constant bias electric field and α_1, α_2... are nonlinearity coefficients, which are also functions of the bias field. The effectiveness of multiplying the frequency of the SHF signal by a factor of two or three and the capacity of the sample studied were measured. It was found that if a film configuration is given to the ferroelectric

Card 1/2

APPROVED FOR RELEASE: 07/12/2001 CIA-RDP86-00513R001135220010-6"

"APPROVED FOR RELEASE: 07/12/2001 CIA-RDP86-00513R001135220010-6

ACC NR: AP6036961

sample, the measurements can be made under continuous (not pulsed) conditions. The proposed method was used to study the nonlinear dynamic properties of a series of ferroelectrics, and the results obtained will be published separately. Orig. art. has: 4 figures and 10 formulas.

SUB CODE: 20/ SUBM DATE: 01Apr66/ ORIG REF: 005/ OTH REF: 005

Card 2/2

APPROVED FOR RELEASE: 07/12/2001 CIA-RDP86-00513R001135220010-6"

"APPROVED FOR RELEASE: 07/12/2001 CIA-RDP86-00513R001135220010-6

L 14139-66 EWP(e)/EWT(m)/EWA(d)/EWP(t)/EWP(z)/EWP(b) JD/WH
ACC NR: AP6000865 SOURCE CODE: UR/0181/65/007/012/3627/3630

AUTHORS: Ivanov, I. V.; Morozov, N. A.

ORG: Moscow State University im. M. V. Lomonosov (Moskovskiy gosudarstvennyy universitet)

TITLE: Nonlinear properties of ferroelectric ceramics in strong microwave fields

SOURCE: Fizika tverdogo tela, v. 7, no. 12, 1965, 3627-3630

TOPIC TAGS: ferroelectric crystal, dielectric constant, ceramic material, Curie point, paraelectricity/VK3

ABSTRACT: The authors report on experiments evidencing that at temperatures below the Curie point the dielectric constant of ferroelectric materials with perovskite structure (VK ceramics) depend on the instantaneous values of the electric microwave field. The purpose of the investigation was to check whether the linear properties, the existence of which was proved experimentally above the Curie point, persist below the Curie point, and to ascertain whether these proper-

Card 1/3

APPROVED FOR RELEASE: 07/12/2001 CIA-RDP86-00513R001135220010-6"

"APPROVED FOR RELEASE: 07/12/2001 CIA-RDP86-00513R001135220010-6

L 14139-66
ACC NR: AP6000865

ties are due to the presence of paraelectric grains intruded in the ferroelectric ceramic below the Curie point, or to a true nonlinearity of the ferroelectric crystal. To avoid difficulties encountered with experiments on bulk samples, the authors perform the experiments on ferroelectric films of thickness smaller than 100 μ, on which electrodes were fastened by a special method. The method for testing the nonlinear properties is claimed to be original and reduces to a measurement of the first Fourier-expansion coefficient of the time-varying capacitance modulated by a harmonic voltage at 1500 Mcs. A resonance chamber tuned to 3,000 Mcs was used to measure the nonlinearity coefficient. The procedures are briefly described. The tests disclosed that in the temperature interval from 10 to 50C type VK-3 ferroelectrics have a nonlinearity at 1500 Mcs, as evidenced by frequency doubling. The nonlinearity coefficient differs from zero both above and below the Curie point, and has a relatively weakly pronounced maximum in the paraelectric temperature region. Since the Curie point of VK-3 is 30C, the nonlinearity occurred in both the paraelectric and in the ferroelectric phases of this material. Tests of the nonlinearity at different frequencies demonstrated the presence

Card 2/3

APPROVED FOR RELEASE: 07/12/2001 CIA-RDP86-00513R001135220010-6"

"APPROVED FOR RELEASE: 07/12/2001 CIA-RDP86-00513R001135220010-6

L 14139-66

ACC NR: AP6000865

of slow relaxation effects and a dependence of the hysteresis on the frequency. The latter has not been satisfactorily explained. Authors thank T. N. Verbitskaya for supplying the film samples of ferroelectric ceramic. Orig. art. has: 4 figures.

SUB CODE: 20/ 11/ SUBM DATE: 18Mar65/ ORIG REF: 001/ OTH REF: 004

Card FW 3/3

APPROVED FOR RELEASE: 07/12/2001 CIA-RDP86-00513R001135220010-6"

"APPROVED FOR RELEASE: 07/12/2001 CIA-RDP86-00513R001135220010-6

MOROZOV, N D.

G

20B-179. **Rapid Machining With Tools Having Negative Rake.** (In Russian) N D Morozov. *Stanki i Instrument* (Machine Tools and Equipment), v 20, June 1949, p 12-14.

Various designs of cutting tools with hard-metal tips for use in machining Cr-Mn-Si steel

APPROVED FOR RELEASE: 07/12/2001 CIA-RDP86-00513R001135220010-6"

"APPROVED FOR RELEASE: 07/12/2001 CIA-RDP86-00513R001135220010-6

PUSHKAREV, Yakov Nikolayevich; MOROZOV, N.D., VYDRIN, P.G., redaktor; ZUDAKIN, I.M., tekhnicheskiy redaktor

[High-speed cutting of trapezoidal threads in high-strength alloy steels] Skorostnoe narezanie trapetsoidal'nykh rez'b na legirovannykh vysokoprochnykh staliakh. Moskva, Gos.izd-vo oboronnoi promysh. 1951. 47 p. (MLRA 8:8)

(Screw cutting)

APPROVED FOR RELEASE: 07/12/2001 CIA-RDP86-00513R001135220010-6"

"APPROVED FOR RELEASE: 07/12/2001 CIA-RDP86-00513R001135220010-6

MOROZOV, N. D.

Lathes

PB chip-breaker for rapid turning, Stan i instr. 23 No. 3, 1952.

Monthly List of Russian Accessions, Library of Congress, July 1952. Unclassified.

APPROVED FOR RELEASE: 07/12/2001 CIA-RDP86-00513R001135220010-6"

"APPROVED FOR RELEASE: 07/12/2001 CIA-RDP86-00513R001135220010-6

MOROZOV, N.D.

N/5
743.2
.K63

Kolesnik, Pavel Adamovich

Avtomobil'nyye materialy i shiny (Posobiye avtomekhaniku) /Automobile materials and tires (a mechanic's handbook) by/P. A. Kolesnik i N. D. Morozov. Moskva, Avtotransizdat, 1954.

172 p. diagrs., tables.
"Literatura": p. 168.

APPROVED FOR RELEASE: 07/12/2001 CIA-RDP86-00513R001135220010-6"

"APPROVED FOR RELEASE: 07/12/2001 CIA-RDP86-00513R001135220010-6

KOLESNIK, Pavel Adamovich,; MOROZOV, Nikolay Dmitriyevich,; MARTENS, S.L., red.; GALAKTIONOVA, Ye.N., tekhn. red.

[Automobile materials and tires; a mechanic's handbook] Avtomobil'nye materialy i shiny; posobie avtomekhaniku. Izd. 2., perer. Moskva, Nauchno-tekhn. izd-vo avtotransp. lit-ry, 1958. 189 p. (MIRA 11:12)
(Automobiles)

APPROVED FOR RELEASE: 07/12/2001 CIA-RDP86-00513R001135220010-6"

"APPROVED FOR RELEASE: 07/12/2001 CIA-RDP86-00513R001135220010-6

SHESTOPALOV, Konstantin Sergeyevich,; ROGOZHIN, Aleksey Ivanovich,; MOROZOV, Nikolay Dmitriyevich; MARTENS, S.L.,red.; ZUYEVA, N.K.,tekhn.red.

[Use and repair of automobiles] Ekspluatatsiia i remont avtomobilei. Moskva, Nauchno-tekhn. izd-vo avtotransp. lit-ry, 1958. 319 p. (MIRA 11:12)

(Automobiles)

APPROVED FOR RELEASE: 07/12/2001 CIA-RDP86-00513R001135220010-6"

"APPROVED FOR RELEASE: 07/12/2001 CIA-RDP86-00513R001135220010-6

KOLESNIK, Pavel Adamovich; MOROZOV, Nikolay Dmitriyevich; SEDOVA, A.P., red.; DONSKAYA, G.D., tekhn. red.

[Materials used in motor vehicles and tires; manual for an automobile mechanic] Avtomobil'nye materialy i shiny; posobie avtomekhaniku. Izd.3., perer. Moskva, Nauchno-tekhn. izd-vo M-va avtomobil'nogo transp. i shossejnykh dorog RSFSR, 1962. 221 p. (MIRA 15:4)

(Materials) (Tires—Rubber)
(Motor vehicles—Maintenance and repair)

APPROVED FOR RELEASE: 07/12/2001 CIA-RDP86-00513R001135220010-6"

"APPROVED FOR RELEASE: 07/12/2001 CIA-RDP86-00513R001135220010-6

MOROZOV, Nikolay Dmitriyevich; SHESTOPALOV, Konstantin Sergeyevich; PLEKHANOV, I.P., red.

[Operation and repair of motor vehicles] Ekspluatatsiia i remont avtomobilei. Moskva, Transport, 1965. 336 p. (MIRA 18:7)

APPROVED FOR RELEASE: 07/12/2001 CIA-RDP86-00513R001135220010-6"

"APPROVED FOR RELEASE: 07/12/2001 CIA-RDP86-00513R001135220010-6

MOROZOV, N.F.

Analytic structure of the solution to the "membrane equation."
Dokl. AN SSSR 152 no.1:73-80 S '63. (MIRA 16:9)

1. Predstavleno akademikom V.I.Smirnovym.
(Elastic plates and shells) (Integral equations)

APPROVED FOR RELEASE: 07/12/2001 CIA-RDP86-00513R001135220010-6"

"APPROVED FOR RELEASE: 07/12/2001 CIA-RDP86-00513R001135220010-6

MOROZOV, N.F.

LEVIN, M.I.; MOROZOV, N.F.

[Automatic signalling in Russian diesel equipment] Avtomaticheskaia signalizatsiia v otechestvennykh dizel'nykh ustanovkakh. Leningrad, Gos. nauchno-tekhn. izd-vo mashinostroit.i sudostroit. lit-ry [Leningradskoe otd-nie] 1953. 142 p. (MIRA 7:3)

(Diesel engines) (Indicators for gas and oil engines)

APPROVED FOR RELEASE: 07/12/2001 CIA-RDP86-00513R001135220010-6"

"APPROVED FOR RELEASE: 07/12/2001 CIA-RDP86-00513R001135220010-6

LEVIN, M.I.; MOROZOV, N.F.

Designing basic instruments for the automatization of diesel engines. Priborostroenie no.9:23-24 S '56. (MLRA 9:10)

(Diesel engines) (Automatic control)

APPROVED FOR RELEASE: 07/12/2001 CIA-RDP86-00513R001135220010-6"

"APPROVED FOR RELEASE: 07/12/2001 CIA-RDP86-00513R001135220010-6

MOROZOV, N.F.

What our efficiency experts are working on. Avtom., telem. i sviaz' no.1:40 Ja 57. (MLRA 10:4)

1. Vozhegodskaya distantsiya signalizatsii i svyazi Severnoy dorogi. (Railroads--Signaling)

APPROVED FOR RELEASE: 07/12/2001 CIA-RDP86-00513R001135220010-6"

"APPROVED FOR RELEASE: 07/12/2001 CIA-RDP86-00513R001135220010-6

MOROZOV, N.F., inzh.

How the moving of signaling apparatus to a new location was accomplished. Avtom., telem. i sviaz' 4 no.4:37 Ap '60. (MIRA 13:6)

1. Vologodskaya distantsiya signalizatsii i svyazi Severnoy dorogi.
(Railroads--Electronic equipment)
(Railroads--Signaling)

APPROVED FOR RELEASE: 07/12/2001 CIA-RDP86-00513R001135220010-6"

"APPROVED FOR RELEASE: 07/12/2001 CIA-RDP86-00513R001135220010-6

MOROZOV, N.F.

Study of an equation of mathematical physics. Trudy LTITSBP no.14: 222-223 '64. (MIRA 18:5)

APPROVED FOR RELEASE: 07/12/2001 CIA-RDP86-00513R001135220010-6"

"APPROVED FOR RELEASE: 07/12/2001 CIA-RDP86-00513R001135220010-6

MOROZOV, N.F. (Leningrad)

Vibration of a prismatic rod under transverse load. Izv. vys. ucheb. zav.; mat. no.3:121-125 '65. (MIRA 18:7)

APPROVED FOR RELEASE: 07/12/2001 CIA-RDP86-00513R001135220010-6"

"APPROVED FOR RELEASE: 07/12/2001 CIA-RDP86-00513R001135220010-6

GORBACHEV, S.S., inzh.; KHANIN, Ye.M., inzh.; MOROZOV, N.F., inzh.; RABINOVICH, Ye.M., inzh.; STROYEV, A.Ye., inzh.; FEL'MAN, Ya.M., inzh.; DOLGIKH, V.N., inzh.; ROGACHEV, S.A., inzh.; YAKUSHEV, A.A.

Dismountable plant for making and assembling house made of large aerated concrete blocks. Rats.i izobr.predl.v stroi. no.12:11-18 '59. (MIRA 13:5)

1. Glavnyy inzhener Konstruktorskogo byuro po zhelezobetonu Glavmosoblstroymaterialov pri Mosoblispolkome (for Yakushev).
2. Konstruktorskoye byuro po zhelezobetonu Glavmosoblstroymaterialov, Moskva, D'yakov per., d.4 (for all).
(Lightweight concrete) (Concrete blocks)

APPROVED FOR RELEASE: 07/12/2001 CIA-RDP86-00513R001135220010-6"

"APPROVED FOR RELEASE: 07/12/2001 CIA-RDP86-00513R001135220010-6

S/133/63/000/002/008/014
A054/A126

AUTHORS: Grinberg, Z.A., Morozov, N.P., Gazman, S.M.

TITLE: Special features of stainless steel production in an atmosphere of inert gases

PERIODICAL: Stal', no. 2, 1963, 152 - 155

TEXT: The Pervoural'skiy starotrubnyy zavod (Pervoural'sk Old Tube Plant) has taken measures to prevent the intergranular corrosion of argon-arc welded stainless steel tubes. To eliminate the contamination of the strip surface no fat-containing emulsion is applied to the roll surface. This, of course, necessitated a smaller allowance for the rolls (+0.05 mm at the groove profile). Two metal brushes (220 mm in diameter, with 0.3 - 0.5 mm diameter wires) are mounted after the welding machine; before this the strip edges are polished by a 120-mm diameter metal brush (its motor operates with 1.5 kW and at 2,870 rpm). The strip thus enters the welding apparatus free of burrs and grease on its surface and with polished edges which improves the stability of the arc and prevents contamination of the liquid weld. In cooperation with the Ural'skiy nauchno-issle-

Card 1/3

APPROVED FOR RELEASE: 07/12/2001 CIA-RDP86-00513R001135220010-6"

"APPROVED FOR RELEASE: 07/12/2001 CIA-RDP86-00513R001135220010-6

dovatel'skiy institut chernykh metallov (Ural Scientific Research Institute of Ferrous Metals) tests were carried out to clean the strip surface by means of ultrasound, the strip being led through a water bath, over which magnetostrictive vibrators are mounted, irradiating both strip surfaces with a 1.5 mm gap between vibration surface and the strip. The cleaning of the strip is completed with abrasive plates (80 x 50 mm) mounted before the ultrasound unit. The plates are continuously supplied with a hot alkaline solution. At a 1.1 m/min rolling rate the strip is subjected to cleaning by the alkaline abrasives for 3, in the ultrasound unit for 4 - 4.5 sec. To improve the welding process, a new split-type nozzle, with a 22 x 8 mm opening has been constructed for feeding the shielding gas. Under the new system the smelted metal is 3.5 times longer in the gas atmosphere than in the conventional method, ensuring a cleaner and denser seam, as the liquid weld solidifies under gas pressure. Tests are now being made with two nozzles, i.e., a shielding atmosphere is also produced within the tube by introducing another nozzle. It was also found that shortening the length of the arc resulted in a smaller part of the edges being heated, thus reducing the area of the liquid weld and, in general, the zones subjected to heat. This also increases the metal resistance to intergranular corrosion; moreover, in this case

APPROVED FOR RELEASE: 07/12/2001 CIA-RDP86-00513R001135220010-6"

"APPROVED FOR RELEASE: 07/12/2001 CIA-RDP86-00513R001135220010-6

the required power, voltage and welding current can also be decreased (a 7-mm arc requires 160 amp, 17 v and 2.65 kw-sec/cm, whereas a 2-mm arc needs 240 amp, 12 v and 1.73 kw-sec/cm). The short-arc method, however, can only be used in combination with the new split-type nozzle. For further improvement of the metal structure the cooling of the tube (internally and externally) must be intensified. To remove the cinder and the metal layer in which part of the alloying elements burnt out during welding, the tube is passed between two metal brushes (120 and 200 mm in diameter, with 0.3 - 0.5 mm diameter wires) applied before the calibrating stand, working at an 18 and 30 m/sec rate. To ensure an accurate fitting of the tube edges, the welding rolls are now being made of Г 13 (G13) non-magnetic and highly wear-resistant steel, which eliminates the magnetic effect of conventional steels. The strip width has also been reconsidered with regard to the new method and a formula is given for its calculation. By decreasing the strip-width, it is not necessary to raise the reduction on the calibrating stand. There are 3 figures.

ASSOCIATION: Pervoural'skiy starotrubnyy zavod (Pervoural'sk Old Tube Plant)

APPROVED FOR RELEASE: 07/12/2001 CIA-RDP86-00513R001135220010-6"

"APPROVED FOR RELEASE: 07/12/2001 CIA-RDP86-00513R001135220010-6

MOROZOV, N.F., inzh.; POROZHNYAKOV, V.I., inzh.

Mechanized molds with reinforced-concrete walls. Mekh.stroi. 18 no.4:18 Ap '61. (MIRA 14:6)

1. Mosoblstoymaterialy. (Precast concrete)

APPROVED FOR RELEASE: 07/12/2001 CIA-RDP86-00513R001135220010-6"

"APPROVED FOR RELEASE: 07/12/2001 CIA-RDP86-00513R001135220010-6

MOROZOV, N.F.

K Nelineinei Teorii Yonkikh Plastin. N. F. Morozov. AN SSSR Dokl., June 11, 1957, pp. 938-971. 11 refs. In Russian. Study of the nonlinear theory of thin plates with emphasis on the problem of the existence of a solution for the case of bending, taking into account Panov, Friedrichs, and Stoker's results.

2
JE 4

APPROVED FOR RELEASE: 07/12/2001 CIA-RDP86-00513R001135220010-6"

"APPROVED FOR RELEASE: 07/12/2001 CIA-RDP86-00513R001135220010-6

20-5-14/60

AUTHOR MOROZOV, N.F.,

TITLE On the Non-Linear Theory of Thin Plates.
(K nelineynoy teorii tonkikh plastin - Russian)

PERIODICAL Doklady Akad.Nauk SSSR, 1957, Vol 114, Nr 5, pp 968 - 971 (U.S.S.R.)

ABSTRACT The present paper discusses the existence of a solution of the problem of the bending-through of a thin plate. Attention is drawn to three previous works dealing with this subject.
The author solves this problem by means of different methods and for different boundary conditions. The author here investigates the system of the equations

$$\Delta^2 F = \lambda E\left[\left(\frac{\partial^2 w}{\partial x \partial y}\right)^2 - \frac{\partial^2 w}{\partial x^2}\frac{\partial^2 w}{\partial y^2}\right]$$

$$\Delta^2 w = \frac{\lambda q}{D} + \frac{\lambda h}{D}\left(\frac{\partial^2 F}{\partial x^2}\frac{\partial^2 w}{\partial y^2} + \frac{\partial^2 F}{\partial y^2}\frac{\partial^2 w}{\partial x^2} - 2\frac{\partial^2 F}{\partial x \partial y}\frac{\partial^2 w}{\partial x \partial y}\right).$$

at the boundary conditions $w|_s = 0$, $\frac{\partial w}{\partial v}\Big|_s = 0$, $F|_s = 0$, $\frac{\partial F}{\partial v}\Big|_s = 0$

or $w|_s = 0$, $\Delta w - \frac{1-\sigma}{\varrho}\frac{\partial w}{\partial v}\Big|_s = 0$, $F|_s = 0$, $\frac{\partial F}{\partial v}\Big|_s = 0$

At $\lambda = 1$ this system goes over into the known system of equations by CARMAN. For λ the solution can be found by means of various methods of the functional analysis, for instance by means of a NEWTON method etc. The author solves the problem for $\lambda = 1$ by means of the method

Card 1/2

APPROVED FOR RELEASE: 07/12/2001 CIA-RDP86-00513R001135220010-6"

"APPROVED FOR RELEASE: 07/12/2001 CIA-RDP86-00513R001135220010-6

20-5-14/60

On the NON-Linear Theory of Thin Plates.

by Yu.SHAUDER, ZH.LERAY, Uspimatem.Nauk, Vol 1, Nr 3-4 (1946).

By transforming the above given system of equations the integral equation $\frac{2h}{D}\iint_{\Omega} F\Delta^2 F\, d\Omega + E\iint_{\Omega} w\Delta^2 w\, d\Omega = \frac{\lambda E}{D}\iint_{\Omega} wv\, d\Omega$ is obtained.

Besides, the above given system of the differential equations and boundary conditions is equivalent to a system of integral differential equations given here. By twofold differentiation a functional equation of the form $z=\lambda\Phi(z)$, is further obtained, where z denotes a sextuple of the functions $\frac{\partial^2 w}{\partial x^2}, \frac{\partial^2 w}{\partial y^2}, \frac{\partial^2 w}{\partial x \partial y}, \frac{\partial^2 F}{\partial x^2}, \frac{\partial^2 F}{\partial y^2}, \frac{\partial^2 F}{\partial x \partial y}$

This functional equation is here investigated in a special vector space of steady functions. For the proof of the existence of the solution the author bases upon the principle by SHAUDER and LERAY. The course of the proof is followed here. In conclusion a lemma and a theorem are given. (No illustrations).

ASSOCIATION Leningrad State University "A.A.ZHDANOV"
PRESENTED BY V.I.SMIRNOV, Member of the Academy
SUBMITTED 24.10.1956
AVAILABLE Library of Congress.
Card 2/2

APPROVED FOR RELEASE: 07/12/2001 CIA-RDP86-00513R001135220010-6"

"APPROVED FOR RELEASE: 07/12/2001 CIA-RDP86-00513R001135220010-6

SOV/124-58-7-7924 D

Translation from: Referativnyy zhurnal, Mekhanika, 1958, Nr 7, p 91 (USSR)

AUTHOR: Morozov, N.F.

TITLE: Nonlinear Problems of the Theory of Thin Plates (Nelineynyye zadachi teorii tonkikh plastin)

ABSTRACT: Bibliographic entry on the author's dissertation for the degree of Candidate of the Physical and Mathematical Sciences, presented to the LGU (Leningrad State University), Leningrad, 1958

ASSOCIATION: LGU (Leningrad State University), Leningrad

1. Metal plates--Theory

Card 1/1

APPROVED FOR RELEASE: 07/12/2001 CIA-RDP86-00513R001135220010-6"

"APPROVED FOR RELEASE: 07/12/2001 CIA-RDP86-00513R001135220010-6

16(1) SOV/43-58-19-9/16

AUTHOR: Morozov, N.F.

TITLE: Non-Linear Problems of the Theory of Thin Plates (Nelineynyye zadachi teorii tonkikh plastin)

PERIODICAL: Vestnik Leningradskogo universiteta, Seriya matematiki, mekhaniki i astronomii, 1958, Nr 19(4) pp 100 - 124 (USSR)

ABSTRACT: The author considers the behavior of loaded thin plates of arbitrary contour in an elastic domain under different conditions on the boundary. The behavior of the plate is described by the Karman equations :

$$\Delta^2 F = E\left[\left(\frac{\partial^2 w}{\partial x \partial y}\right)^2 - \frac{\partial^2 w}{\partial x^2} \cdot \frac{\partial^2 w}{\partial y^2}\right]$$

$$\Delta^2 w = \frac{1}{D}\left[q + h\left(\frac{\partial^2 F}{\partial y^2}\frac{\partial^2 w}{\partial x^2} + \frac{\partial^2 F}{\partial x^2}\frac{\partial^2 w}{\partial y^2} - 2\frac{\partial^2 F}{\partial x \partial y} \cdot \frac{\partial^2 w}{\partial x \partial y}\right)\right]$$

The author investigates the existence of a solution under the following conditions

Card 1/2

APPROVED FOR RELEASE: 07/12/2001 CIA-RDP86-00513R001135220010-6"

"APPROVED FOR RELEASE: 07/12/2001 CIA-RDP86-00513R001135220010-6

Non-Linear Problems of the Theory of Thin Plates SOV/43-58-9-9/16

$$w\big|_s = \frac{\partial w}{\partial \nu}\Big|_s = 0 \quad , \quad F\big|_s = 0 \quad , \quad \frac{\partial F}{\partial \nu}\Big|_s = 0$$

or

$$w\big|_s = 0 \quad , \quad \Delta w - \frac{1-\sigma^2}{\xi}\frac{\partial w}{\partial \nu}\Big|_s = 0 \quad , \quad F\big|_s = 0 \quad , \quad \frac{\partial F}{\partial \nu}\Big|_s = 0$$

At first an estimation of the biharmonic Green function and of its derivatives is carried out. This allows an approximate estimation of the solution and of its derivatives, and then the continuation with respect to the parameter is used as in the paper of Leray and Schauder [Ref 29]. The obtained existence theorem is extended to a plate of variable thickness and flexural stiffness. A comparison with the Galerkin approximations of the solution is made.
There are 4 figures, and 34 references, 23 of which are Soviet, 5 German, 3 American, and 3 English.

SUBMITTED: April 1, 1957

Card 2/2

APPROVED FOR RELEASE: 07/12/2001 CIA-RDP86-00513R001135220010-6"

"APPROVED FOR RELEASE: 07/12/2001 CIA-RDP86-00513R001135220010-6

14(0) SOV/20-123-3-9/54

AUTHOR: Morozov, N. F.

TITLE: The Uniqueness of the Symmetrical Solution of the Problem of Great Sags of a Symmetrically Loaded Circular Plate (Yedinstvennost' simmetrichnogo resheniya zadachi o bol'shikh progibakh simmetrichno zagruzhennoy krugloy plastiny)

PERIODICAL: Doklady Akademii nauk SSSR, Vol 123, Nr 3, pp 417-419, 1958 (USSR)

ABSTRACT: In 3 previous papers the existence of the solutions of problems of great sags of inclined shells and of thin plates was proved, but the problem of uniqueness was not solved. In the present paper, the author proposes to prove the uniqueness mentioned in the title. In the case of a circular symmetrically loaded plate, the system of Karman equations can be reduced to a system of ordinary differential equations:

$$Av - \frac{\lambda}{2} u^2 = 0 \quad , \quad \frac{1}{r} Au + \lambda uv + \int_0^r q\varrho d\varrho = 0$$

Card 1/4

APPROVED FOR RELEASE: 07/12/2001 CIA-RDP86-00513R001135220010-6"

"APPROVED FOR RELEASE: 07/12/2001 CIA-RDP86-00513R001135220010-6

with $A(\ ) \equiv -r \frac{d}{dr} \frac{1}{r} \frac{d}{dr} r(\ )$

(The other terms contained in this equation seem to have been defined in a previous paper). The following boundary conditions hold for a rigidly fastened plate if there are no chain tensions on the circumference: $u\big|_{r=1} = 0$; $v\big|_{r=1} = 0$; $\frac{u}{r}\Big|_{r=0} < \text{const}$; $\frac{v}{r}\Big|_{r=0} < \text{const}$. The author investigates the functional space L_ϱ with the norm $\int_0^1 \frac{1}{\varrho}(u^2 + v^2)d\varrho$ and the space W_ϱ (which is formed by joining sufficiently smooth functions) with the norm $\int_0^1 \frac{1}{\varrho}\left[(Au)^2 + (Av)^2\right] d\varrho$. After several

APPROVED FOR RELEASE: 07/12/2001 CIA-RDP86-00513R001135220010-6"

"APPROVED FOR RELEASE: 07/12/2001 CIA-RDP86-00513R001135220010-6

steps, the apriori estimates $\int_0^1 \frac{1}{r}(u^2 + v^2)dr \leq$ const. are found.

The existence of the solution of the above-given ordinary differential equation, generally speaking, was deduced as a special case in a previous paper by the author (Ref 3). However, the proof of existence has to be given a second time since the existence of the symmetrical solution must be proved. The author then passes over from the above-given system of differential equations to the equivalent system of integral equations. For this system, a theorem of existence may easily be deduced for any $\lambda \in [0, 1]$ according to the method of Yu. Shauder and Zh. Lerey (Ref 5). The solution of the system of integral equations will also be the solution of the initially-given system of differential equations in the space W_ρ. The author then proves the uniqueness of the symmetrical solution, and he proves that the conditions of Hilldebrandt-Graves are satisfied in the case of the above-given system of differential equations.

APPROVED FOR RELEASE: 07/12/2001 CIA-RDP86-00513R001135220010-6"

"APPROVED FOR RELEASE: 07/12/2001 CIA-RDP86-00513R001135220010-6

The Uniqueness of the Symmetrical Solution of the Problem of Great Sags of a Symmetrically Loaded Circular Plate SOV/20-123-3-9/54

For this purpose, also a lemma is proved. In this way the uniqueness of the symmetrical solution for a circular symmetrically loaded rigidly fastened plate can be proved. Corollary: v corresponds to a radial stress, and the above-mentioned lemma has the following simple physical meaning: under the given boundary conditions, the radial stresses stretch the plate. The author investigated a rigidly fastened plate without chain stresses on its circumference. Finally, other types of boundary conditions are outlined in short. There are 6 references, 5 of which are Soviet and 1 American.

PRESENTED: June 30, 1958, by V. I. Smirnov, Academician

SUBMITTED: June 27, 1958

Card 4/4

APPROVED FOR RELEASE: 07/12/2001 CIA-RDP86-00513R001135220010-6"

"APPROVED FOR RELEASE: 07/12/2001 CIA-RDP86-00513R001135220010-6

report presented at the 1st All-Union Congress of Theoretical and Applied Mechanics, Moscow, 27 Jan - 3 Feb '60.

201. A. Ia. Nikhailov (Moscow): An experimental study of the load carrying capacity of thin-walled steel tubes subjected to various combinations of tension, torsion, and internal pressure.

202. A. G. Nikhlin (Leningrad): Variational methods in the theory of elasticity.

203. A. A. Movchan (Moscow): The stability of motions of solids — Lagrange's theorem for solids and its inversion.

204. A. A. Movchan (Moscow): Axisymmetric supersonic flutter of a circular cylindrical shell.

205. N. F. Morozov (Leningrad): On the uniqueness of the solution of the problem of large deflections of a circular plate under rotationally symmetric loading.

206. G. M. Mukhadze (Tbilisi): The determination of the deformation of trusses without diagonals.

207. Kh. M. Mushtari, I. G. Teregulov (Kazan): A theory of moderately thick plates and shells.

208. A. G. Nasarov (Orenburg): Some problems in the theory of seismic stability.

209. O. E. Sigul (Tallin): Vibrations of an elastic circular cylindrical shell under concentrated impact loading.

210. O. E. Sigul (Tallin): More accurate equations of motion for circular cylindrical shells.

211. V. A. Nikitin (Leningrad): Approximate treatment of cylindrical shells under concentrated loads.

212. S. S. Nikiforov (Moscow): Redistribution of reactions at the edge of a simply supported rectangular plate under gradually increasing loading.

213. W. Nowacki (Warsaw): Some dynamical problems of thermoelasticity.

214. S. E. Novikov (Moscow): Investigation of the viscous behavior of elastic, visco-plastic materials in vibrations.

215. Ia. I. Pelelman, I. A. Klaurenz (Odessa): Problems of the non-linear theory of elasticity.

216. I. P. Obraztsov (Moscow): [illegible] variational method to the design [illegible] structures.

217. K. I. Oraevsky (Leningrad): Complete computation of a wave field in homogeneous elastic media with parallel plane boundaries.

218. H. Ohaba (Bagdad): The method of electroplating and its applications.

219. W. Olszak (Warsaw): Two-dimensional problems in the theory of plasticity of non-homogeneous and anisotropic media.

220. Ia. G. Osipov (Moscow): The state of stress in a deformed curved bar.

221. V. Ia. Pavilainen (Leningrad): A membrane theory for a toroidal shell.

222. V. F. Parley (Moscow): Creep, elastic properties and anisotropy of plastic lubricants.

223. O. Y. Palchinskii (Kharkov): A practical method of designing reinforced concrete structures with reference to creep.

224. Ia. G. Pasverne (Riga): The problem of structural damping.

225. P. I. Perlin (Moscow): An approximate method for solving elastic-plastic problems.

226. P. I. Perlin, L. A. Shofman (Moscow): Application of the theory of rigid, plastic solids to problems of metal forming.

227. A. S. Pelenskii (Kiev): On the axisymmetric problem: on the theory of elasticity.

228. D. S. Polskii (Moscow): A method for studying the plane field of relative volume strains in soils.

229. G. Ia. Popov (Novosibirsk): The application of some new methods of the theory of integral equations to the solution of contact problems of the theory of elasticity.

230. V. A. Postnov (Leningrad): Free and forced vibrations of frames taking into account shear deformations and energy dissipation.

231. V. E. Saturov (Dnepropetrovsk): Investigation and calculation of internal friction in elastic members of vibrating machines.

232. W. Prager (Providence): An elementary discussion of definitions of stress rate.

233. E. I. Prigorovskii (Moscow): Photoelastic investigation of stresses in three-dimensional layered models.

APPROVED FOR RELEASE: 07/12/2001 CIA-RDP86-00513R001135220010-6"

"APPROVED FOR RELEASE: 07/12/2001 CIA-RDP86-00513R001135220010-6

88188

16.5400
16.3500

S/140/60/000/006/014/018
C111/C222

AUTHOR: Morozov, N.F.

TITLE: Nonlinear Problems of the Theory of Thin Anisotropic Shells

PERIODICAL: Izvestiya vysshikh uchebnykh zavedeniy, Matematika, 1960, No. 6, pp. 170- 173

TEXT: Generalizing his results (Ref. 4) the author proves the existence of the solution for the following boundary value problem for thin anisotropic shells :

$$\Delta * {}^2_\delta F = \lambda \left[\left(\frac{\partial^2 w}{\partial x \partial y} \right)^2 - \frac{\partial^2 w}{\partial x^2} \frac{\partial^2 w}{\partial y^2} \right], \tag{1}$$

$$\Delta * {}^2_D w = \lambda q + \lambda h \left(\frac{\partial^2 F}{\partial x^2} \frac{\partial^2 w}{\partial y^2} + \frac{\partial^2 w}{\partial x^2} \frac{\partial^2 F}{\partial y^2} - 2 \frac{\partial^2 w}{\partial x \partial y} \frac{\partial^2 F}{\partial x \partial y} \right),$$

$$F|_s = 0, \quad \frac{\partial F}{\partial \nu}\Big|_s = 0, \quad w|_s = 0, \quad \frac{\partial w}{\partial \nu}\Big|_s = 0, \tag{3}$$

Card 1/ 3

APPROVED FOR RELEASE: 07/12/2001 CIA-RDP86-00513R001135220010-6"

"APPROVED FOR RELEASE: 07/12/2001 CIA-RDP86-00513R001135220010-6

88188

S/140/60/000/006/014/018
C111/C222

Nonlinear Problems of the Theory of Thin Anisotropic Shells

where $\Delta_{\delta}^{2} F = \delta_2 \frac{\partial^4 F}{\partial x^4} + 2\delta_3 \frac{\partial^4 F}{\partial x^2 \partial y^2} + \delta_1 \frac{\partial^4 F}{\partial y^4}$,

$$\Delta_{D}^{2} w = D_1 \frac{\partial^4 w}{\partial x^4} + 2D_3 \frac{\partial^4 F}{\partial x^2 \partial y^2} + D_2 \frac{\partial^4 w}{\partial y^4} \quad , \tag{2}$$

$$\delta_1 = \frac{1}{E_2}, \quad \delta_2 = \frac{1}{E_1}, \quad 2\delta_3 = \frac{1}{G} - \frac{\sigma_1}{E_1} - \frac{\sigma_2}{E_2}, \quad D_1 = \frac{E_1 h^3}{12(1 - \sigma_1 \sigma_2)},$$

$$D_2 = \frac{E_2 h^3}{12(1 - \sigma_1 \sigma_2)}, \quad D_3 = \frac{1}{2}\left(D_1 \sigma_2 + D_2 \sigma_1 + \frac{1}{3} G h^3 \right)$$

The proof of existence in essential is analogous to that of (Ref. 4) and is based on results of (Ref. 6,7,9).
The author mentions S.G. Mikhlin, S.G. Lekhuitskiy and O.V. Guseva.
There are 10 references : 8 Soviet, 1 German and 1 Italian.

Card 2/3

APPROVED FOR RELEASE: 07/12/2001 CIA-RDP86-00513R001135220010-6"

"APPROVED FOR RELEASE: 07/12/2001 CIA-RDP86-00513R001135220010-6

88188

S/140/60/000/006/014/018
C111/C222

Nonlinear Problems of the Theory of Thin Anisotropic Shells

[Abstracter's note : (Ref. 4) concerns a paper of the author in Doklady Akademii nauk SSSR, 1957, Vol. 114, No. 5. (Ref. 6) is a paper of Somigliana in Ann. di Matematica p. ed appl. XXII, pp. 143 - 156, 189. (Ref. 7) concerns S.G. Mikhlin in Tr. seysmologicheskogo in-ta, 1936, No. 76. (Ref. 9) concerns O.V. Guseva in Doklady Akademii nauk SSSR, 1955, Vol. 102, No. 6]

ASSOCIATION: Leningradskiy tekhnologicheskiy institut (Leningrad Technological Institute)

SUBMITTED: December 22, 1958

Card 3/3

APPROVED FOR RELEASE: 07/12/2001 CIA-RDP86-00513R001135220010-6"

"APPROVED FOR RELEASE: 07/12/2001 CIA-RDP86-00513R001135220010-6

24 4280 1103, 1321, 1191

S/140/61/000/002/006/009
C1 1/C2

AUTHOR: Morozov, N. F.

TITLE: On the question on the existence of an unsymmetric solution in the problem of large bendings of a circular plate which is symmetrically loaded

PERIODICAL: Izvestiya vysshikh uchebnykh zavedeniy. Matematika, no. 2, 1961, 126-129

TEXT: The author considers large bendings of a circular plate which is tightly clamped along its boundary and which is submitted to a symmetrically distributed shunt loading q. It is shown that beside of the symmetric solution for increasing q there may appear an unsymmetric solution.

The problem leads to the equations

$$u + \frac{1+\mu}{1-\mu} O_x = \frac{2}{1-\mu} w_x w_{xx} - \frac{2}{1-\mu} w_y w_{xy} + w_x w_{xy} + w_x w_{yy},$$

$$v + \frac{1+\mu}{1-\mu} O_y = \frac{2}{1-\mu} w_y w_{yy} - \frac{2}{1-\mu} w_x w_{xy} + w_y w_{xy} + w_y w_{xx}. \qquad (1)$$

$$D \Delta^2 w = q + N_x w_{xx} + N_y w_{yy} + 2N_{xy} w_{xy}$$

Card 1/4

APPROVED FOR RELEASE: 07/12/2001 CIA-RDP86-00513R001135220010-6"

"APPROVED FOR RELEASE: 07/12/2001 CIA-RDP86-00513R001135220010-6

On the question on the existence S/140/61/000/002/006/009
C 111/C222

with the boundary conditions

$$w|_S = 0, \quad \frac{\partial w}{\partial \nu}\Big|_S = 0, \quad u|_S = 0, \quad v|_S = 0. \qquad (2)$$

where w is the bending, u and v the radical and the tangential shifts $\Theta = u_x + u_y$.

The solution of (1) is equivalent to the determination of the stationary points of the functional

$$I(w, u, v) = \frac{1}{2}\iint_D \left[(\varepsilon_{rr} + \varepsilon_{\theta\theta})^2 - 2(1-\mu)(\varepsilon_{rr}\varepsilon_{\theta\theta} - \frac{\omega^2}{4})\right] r\,dr\,d\theta +$$

$$+ \frac{\lambda^2}{24}\iint_D (\Delta w)^2 r\,dr\,d\theta - \iint_D q w\,r\,dr\,d\theta, \qquad (3)$$

where ε_{rr}, $\varepsilon_{\theta\theta}$ and ω are connected with w, u, v, Θ by the Kirchhoff formulas.

Card 2/4

APPROVED FOR RELEASE: 07/12/2001 CIA-RDP86-00513R001135220010-6"

"APPROVED FOR RELEASE: 07/12/2001 CIA-RDP86-00513R001135220010-6

and $q^* = \frac{1-\mu}{E\delta} \cdot q$.

The existence and uniqueness of a symmetric solution w_0, u_0, v_0 of (1) was proved by the author in an earlier paper (Ref.4: Yedinstvennost' simmetrichnogo resheniya zadachi o bol'shikh progibakh simmetrichno zagruzhennoy krugloy plastiny [Uniqueness of the symmatric solution of the problem on the large bendings of a symmetrically loaded circular plate] DAN SSSR, v.123, no.3, 1958). The author proves the existence of the unsymmetric solution by showing that there exist sufficiently smooth functions w_1, u_1, v_1 satisfying (2) so that $I(w_1, u_1, v_1) < I(w_0, u_0, v_0)$. For the proof, for simplicity the author puts = 0 and

$$q^* = -A\frac{\delta^2}{12} - \frac{A^3}{16^3 6}(10-44r^2+60r^4-40r^6+10r^8)$$

so that

$$w_0 = -A\frac{1+r^4-2r^2}{64}, \quad u_0 = A^2\frac{5r-18r^3+20r^5-7r^7}{96 \cdot 16^2} \qquad (6)$$

Then as w_1, u_1, v_1 one chooses

APPROVED FOR RELEASE: 07/12/2001 CIA-RDP86-00513R001135220010-6"

"APPROVED FOR RELEASE: 07/12/2001 CIA-RDP86-00513R001135220010-6

22969

On the question on the existence... S/140/61/000/002/006/009
C111/C222

$$\begin{cases} w_1 = w_0 + \sin n\theta \bar{w}(r) \\ u_1 = u_0 + \sin n\theta \bar{u}(r) \\ v_1 = \sin n\theta \bar{v}(r) , \end{cases}$$

where $\bar{w}, \bar{u}, \bar{v}$ are sufficiently smooth and satisfy (2). Then for a suitable choice of $\bar{w}$ and sufficiently large A and n it holds $I(w_1, u_1, v_1) < I(w_0, u_0, v_0)$. There are 4 Soviet-bloc references.

ASSOCIATION: Leningradskiy tekhnologicheskiy institut Ts B P (Leningrad Technological Institute Ts B P)

SUBMITTED: December 31, 1958

Card 4/4

APPROVED FOR RELEASE: 07/12/2001 CIA-RDP86-00513R001135220010-6"

"APPROVED FOR RELEASE: 07/12/2001 CIA-RDP86-00513R001135220010-6

S/020/62/147/006/010/034
B104/B180

AUTHOR: Morozov, N. F.

TITLE: Qualitative study of a circular symmetrically compressed plate with heavy peripheral load (proof of the occurrence of rippling)

PERIODICAL: Akademiya nauk SSSR. Doklady, v. 147, no. 6, 1962, 1318-1319

TEXT: A rigidly supported circular plate is investigated where there is no transverse load but uniform compression along the periphery. At the boundary conditions

$$w|_{r=R} = 0; \quad (2a)$$

$$\Delta w - \frac{1-\sigma}{R} w_r - \frac{1-\sigma}{R^2} w_{\theta\theta}\Big|_{r=R} = 0; \quad (2б)$$

$$\sigma_r|_{r=R} = -p; \quad (2в)$$

$$\tau_{r\theta}|_{r=R} = 0, \quad (2г)$$

the state of the plate is described by the Kirchhoff equations

Card 1/3

APPROVED FOR RELEASE: 07/12/2001 CIA-RDP86-00513R001135220010-6"

"APPROVED FOR RELEASE: 07/12/2001 CIA-RDP86-00513R001135220010-6

$$D\Delta^2 w - h\sigma_r w_{rr} - h\sigma_\theta\left(\frac{1}{r}w_r + \frac{1}{r^2}w_{\theta\theta}\right) - 2h\tau_{r\theta}\left(-\frac{w_\theta}{r^2} + \frac{w_{r\theta}}{r}\right) = 0; \tag{1a}$$

$$2u_{rr} + \frac{2u_r}{r} - \frac{2u}{r^2} + \frac{1-\sigma}{r^2}u_{\theta\theta} + \frac{1+\sigma}{r}v_{r\theta} + \frac{3\sigma-1}{r^2}v_\theta + 2w_r w_{rr} +$$
$$+ \frac{1-\sigma}{r}w_r^2 + \frac{1+\sigma}{r^2}w_\theta w_{r\theta} - \frac{1+\sigma}{r^2}w_\theta^2 + \frac{1-\sigma}{r^2}w_r w_{\theta\theta} = 0; \tag{1б}$$

$$(1-\sigma)\left(v_{rr} + \frac{v_r}{r} + \frac{v}{r^2}\right) - \frac{2v_{\theta\theta}}{r^2} - \frac{1+\sigma}{r}u_{r\theta} - \frac{3-\sigma}{r^2}u_\theta - \frac{2w_\theta w_r}{r^2} -$$
$$- \frac{2w_\theta w_{\theta\theta}}{r^2} + \frac{1+\sigma}{r^2}w_r w_\theta - \frac{1+\sigma}{r}w_r w_{r\theta} - \frac{1-\sigma}{r}w_\theta w_{rr} = 0 \tag{1в}.$$

w is the deflection, u is the radial, v the tangential displacement, σ_r, σ_θ and $\tau_{r\theta}$ are stresses, θ is the polar angle. The solution of the problem is equivalent to finding the stationary points of the functional

APPROVED FOR RELEASE: 07/12/2001 CIA-RDP86-00513R001135220010-6"

"APPROVED FOR RELEASE: 07/12/2001 CIA-RDP86-00513R001135220010-6

$$I = \frac{Eh^3}{24(1-\sigma^2)} \iint\limits_{r<R} \left\{ (\Delta w)^2 - 2(1-\sigma)\left[\frac{1}{r} w_r w_{rr} + \frac{1}{r^2} w_{rr} w_{\theta\theta} - \left(\frac{w_{r\theta}}{r} - \frac{w_\theta}{r^2}\right)^2\right]\right\} r\,dr\,d\theta + \frac{Eh}{2(1-\sigma^2)} \iint\limits_{r<R} \left[(e_{rr} + e_{\theta\theta})^2 - 2(1-\sigma)\left(e_{rr}e_{\theta\theta} - \frac{\epsilon_{r\theta}^2}{4}\right)\right] r\,dr\,d\theta, \quad (3),$$

as (1a) and (1b) are the Euler equations for $I(v,w)$. K. Friedrichs and J. Stoker (Am. J. Math., 63, no. 4 (1941)) proved the existence of three symmetrical solutions w_0, u_0 and v_0 ($v_0 = 0$) in which the functional is reduced to a minimum. This article proves the existence of nonsymmetric solutions by finding $w(r,\theta) = w_0(r) + w'(r,\theta)$, $u(r,\theta) = u_0(r) + u'(r,\theta)$, $v(r,\theta) = v'(r,\theta)$ functions that are smooth enough to give the functional I a smaller value than that of $I_0 = I(u_0, v_0, w_0)$.

PRESENTED: May 21, 1962, by V. I. Smirnov, Academician

SUBMITTED: May 16, 1962

Card 3/3

APPROVED FOR RELEASE: 07/12/2001 CIA-RDP86-00513R001135220010-6"

"APPROVED FOR RELEASE: 07/12/2001 CIA-RDP86-00513R001135220010-6

L 13215-63 EWP(r)/EWT(m)/BDS AFFTC/APGC EM

ACCESSION NR: AP3000953 S/0140/63/000/003/0095/0098

AUTHOR: Morozov, N. F. (Leningrad)

52

TITLE: Circular symmetrically compressed disc with large boundary load

SOURCE: IVUZ. Matematika, no. 3, 1963, 95-98

TOPIC TAGS: compressed circular disc, symmetric load, nonsymmetric crimp, elasticity

ABSTRACT: The possibility that a circular disc with symmetric loads can have a nonsymmetric depression (crimp) has been known experimentally for a long time. The theoretical problem of the possibility of a crimp in a symmetrically loaded circular disc was investigated by D. Yu. Panov and V. I. Feodos'yev (O ravnovesii i potere ustoychivosti pologikh obolochek pri bol'shikh progibakh. PMM, t. 12, vy*p. 4, 1948), who studied Karman's equation for a circular rigidly fixed disc in the absence of chain stresses and constant transverse stress on the contour. However, the existence of a nonsymmetric equation cannot be considered rigorously proved since the differential equation of equilibrium was satisfied only approximately. The author considers a rigidly supported circular disc which is uniformly compressed on the contour, with lack of transverse load. The

Card 1/2

APPROVED FOR RELEASE: 07/12/2001 CIA-RDP86-00513R001135220010-6"

"APPROVED FOR RELEASE: 07/12/2001 CIA-RDP86-00513R001135220010-6

L 13215-63

ACCESSION NR: AP3000953

mathematical condition of the disc is described by the system of Kirchhoff equations in the enclosure. By converting this problem to an equivalent one, the author shows rigoursly that in fact it is possible to get a nonsymmetric crimp under a symmetric load. Orig. art. has: 9 formulas.

ASSOCIATION: none

SUBMITTED: 14May62 DATE ACQ: 12Jun63 ENCL: 02

SUB CODE: 00 NO REF SOV: 002 OTHER: 001

Card 2/2

APPROVED FOR RELEASE: 07/12/2001 CIA-RDP86-00513R001135220010-6"

"APPROVED FOR RELEASE: 07/12/2001 CIA-RDP86-00513R001135220010-6

MOROZOV, N.G.

Preparation of peat fertilizers at the Siverskiy Peat Works. Torf. prom. 37 no.3:33-34 '60. (MIRA 13:9)

1. Direktor Siverskoy rayonnoy t·aktornoy stantsii.
(Silverskiy-- Peat) (Fertilizers and manures)

APPROVED FOR RELEASE: 07/12/2001 CIA-RDP86-00513R001135220010-6"

"APPROVED FOR RELEASE: 07/12/2001 CIA-RDP86-00513R001135220010-6

MOROZOV, N.G.

How we prepare stuffed animals for the geographical study room.
Geog. v shkole 24 no.5:70-72 S-O '61. (MIRA 14:8)

1. Klyuchevskaya shkola Chelyabinskoy oblasti.
(Taxidermy)

APPROVED FOR RELEASE: 07/12/2001 CIA-RDP86-00513R001135220010-6"

"APPROVED FOR RELEASE: 07/12/2001 CIA-RDP86-00513R001135220010-6

MOROZOV, N.G.

A percentage protractor. Geog. v shkole 23 no.5:69 S - O '60. (MIRA 13:9)

1. Klyuchevskaya shkola Troitskogo rayona Chelyabinskoy oblasti. (Protractors)

APPROVED FOR RELEASE: 07/12/2001 CIA-RDP86-00513R001135220010-6"

"APPROVED FOR RELEASE: 07/12/2001 CIA-RDP86-00513R001135220010-6

MOROZOV, N. G.

The Committee on Stalin Prizes (of the Council of Ministers USSR) in the fields of science and inventions announces that the following scientific works, popular scientific books, and textbooks have been submitted for competition for Stalin Prizes for the years 1952 and 1953. (Sovetskaya Kultura, Moscow, No. 22-40, 20 Feb - 3 Apr 1954)

Name	Title of Work	Nominated by
Aubinshteyn, Ya. M. Blyudov, V. P. Vyrubov, D. N. Kornitskiy, S. Ya. Litvin, A. M. Luknitskiy, V. V. Morozov, N. G. Prokhorov, F. G. Yakub, S. L.	"General Thermal Engineering" (Student Manual, 2d Edition)	Moscow Power Engineering Institute imeni V. M. Molotov

SO: W-30604, 7 July 1954

APPROVED FOR RELEASE: 07/12/2001 CIA-RDP86-00513R001135220010-6"

"APPROVED FOR RELEASE: 07/12/2001 CIA-RDP86-00513R001135220010-6

BASHKIROV, A.N.; KAGAN, Yu.B.; LOKTEV, S.M.; MOROZOV, N.G.

Use of iron ore catalysts in the synthesis based on carbon monoxide and hydrogen. Trudy inst. nefti. 10:234-246 '57. (MIRA 11:4)

(Catalysts) (Hydrocarbons)

APPROVED FOR RELEASE: 07/12/2001 CIA-RDP86-00513R001135220010-6"

"APPROVED FOR RELEASE: 07/12/2001 CIA-RDP86-00513R001135220010-6

MOROZOV, N.G.

BASHKIROV, A.N.; KAGAN, Yu.B.; KOKTEV, S.M.; SHCHEKIN, V.V.; GOL'DIN, S.A.; MOROZOV, N.G.

Activating characteristics of molten iron catalysts used in the synthesis based on carbon monoxide and hydrogen, and reduced at high temperatures. Trudy inst. nefti. 10:247-261 '57.
(MIRA 11:4)

(Catalysts) (Hydrocarbons)

APPROVED FOR RELEASE: 07/12/2001 CIA-RDP86-00513R001135220010-6"

"APPROVED FOR RELEASE: 07/12/2001 CIA-RDP86-00513R001135220010-6

[illegible]

APPROVED FOR RELEASE: 07/12/2001 CIA-RDP86-00513R001135220010-6"

"APPROVED FOR RELEASE: 07/12/2001 CIA-RDP86-00513R001135220010-6

APPROVED FOR RELEASE: 07/12/2001 CIA-RDP86-00513R001135220010-6"

"APPROVED FOR RELEASE: 07/12/2001 CIA-RDP86-00513R001135220010-6

KAGAN, Yu.B.; BASHKIROV, A.N.; LOKTEV, S.M.; MOROZOV, N.G.; ORLOVA, N.A.

Effect of the introduction of ferroalloys on the activity and stability of fused iron catalysts for synthesis based on CO and H_2. Trudy Inst. nefti 12:228-239 '58. (MIRA 12:3)

(Catalysts) (Iron alloys) (Chemistry, Organic--Synthesis)

APPROVED FOR RELEASE: 07/12/2001 CIA-RDP86-00513R001135220010-6"

"APPROVED FOR RELEASE: 07/12/2001 CIA-RDP86-00513R001135220010-6

KAGAN, Yu.B.; BASHKIROV, A.N.; MOROZOV, N.G.; KRYUKOV, Yu.B.; ROZOVSKIY, A.Ya.

Hydrogenating capacity of fused iron catalysts in the synthesis from CO and H_2. Trudy Inst.nefti 13:167-179 '59. (MIRA 13:12)
(Catalysts) (Hydrogenation)

APPROVED FOR RELEASE: 07/12/2001 CIA-RDP86-00513R001135220010-6"

"APPROVED FOR RELEASE: 07/12/2001 CIA-RDP86-00513R001135220010-6

S/062/62/000/006/004/008
B117/B101

AUTHORS: Morozova, L. P., Golubtsov, S. A., Andrianov, K. A., Trofimova, I. V., and Morozov, N. G.

TITLE: Formation of alkyl (aryl) chlorosilanes in direct reaction of alkyl (aryl) chlorides with silicon. Communication 1. Selectivity of silicon and copper catalysts, and formation of methyl dichlorosilane

PERIODICAL: Akademiya nauk SSSR. Izvestiya. Otdeleniye khimicheskikh nauk, no. 6, 1962, 1005 - 1011

TEXT: Production conditions, precipitating agents, and promoters affecting the selective activity of silicon and copper hydroxide catalysts in the formation of methyl dichlorosilane and dimethyl dichlorosilane were studied. Sufficiently active catalysts can be obtained by using copper chloride and copper nitrate, but copper sulfate gives completely passive catalysts. Simultaneous precipitation of copper hydroxide and zinc hydroxide (~2% by weight) increases the selectivity of the catalyst. Sodium hydroxide (in the formation of methyl dichlorosilane) and NH_4OH or Na_2CO_3 (in the forma-

Card 1/3

APPROVED FOR RELEASE: 07/12/2001 CIA-RDP86-00513R001135220010-6"

"APPROVED FOR RELEASE: 07/12/2001 CIA-RDP86-00513R001135220010-6

tion of dimethyl dichlorosilane) were found to be precipitating agents favoring the selectivity. The greatest effect on the selectivity of the catalyst is that exercised by promoters after the precipitation of hydroxides: Thus after introducing $ZnCl_2$ the yield of dimethyl dichlorosilane reaches 60% and after introducing Na_2SiO_3 that of methyl dichlorosilane reaches 45%. Thermal decomposition of methyl chloride on copper catalysts at 260-280°C (contact time 6-10 sec) was also studied. The hydrogen chloride separated in this reaction considerably affected the formation of methyl dichlorosilane. The following reaction course was suggested for the formation of methyl dichlorosilane:

$$CH_3Cl \xrightarrow{\text{catalyst}} HCl + \text{carbon} + \text{hydrocarbons}$$

$$Si + HCl \longrightarrow HSiCl_3 \xrightarrow{CH_3Cl} CH_3SiHCl_2$$

$$Si + 2CH_3Cl \longrightarrow CH_3HSiCl_2 + \text{carbon} + \text{hydrocarbons}$$

The optimum temperature for synthesizing methyl dichlorosilane was found to be 350-360°C. At higher and lower temperatures, silicon tetrachloride,

APPROVED FOR RELEASE: 07/12/2001 CIA-RDP86-00513R001135220010-6"

"APPROVED FOR RELEASE: 07/12/2001 CIA-RDP86-00513R001135220010-6

S/062/62/000/006/004/008
B117/B101

Formation of alkyl ...

trichlorosilane, and methyl trichlorosilane were mainly formed. There are 4 tables.

SUBMITTED: December 9, 1961

Card 3/3

APPROVED FOR RELEASE: 07/12/2001 CIA-RDP86-00513R001135220010-6"

"APPROVED FOR RELEASE: 07/12/2001 CIA-RDP86-00513R001135220010-6

L 18899-63 EWP(j)/EPF(c)/EWT(m)/BDS ASD Pr-4/Pc-4 RM/WW/MAY
ACCESSION NR: AP3006593 S/0020/63/151/006/1329/1331

AUTHORS: Golubtsov, S. A.; Andrianov, K. A. (Corr. member AN SSSR); Turetskaya, P. A.; Belikova, Z. V.; Trofimova, I. V.; Morozov, N. G.

69

TITLE: Reaction mechanism in the formation of dialkyldichlorosilanes

SOURCE: AN SSSR. Doklady*, v. 151, no. 6, 1963, 1329-1331

7

TOPIC TAGS: dialkyldichlorosilane, dichlorosilane, silane, silicon chloride, copper chloride, hydration, methyl chloride, alkyl chloride

ABSTRACT: Authors showed that during the interaction of alkyl chloride with silica in the presence of copper, dialkyldichlorosilanes are formed. Copper monochloride, which is formed during the reaction of methyl chloride with copper, plays an important part in the synthesis of dialkyldichlorosilanes. The process consists of the adsorption of alkylchloride and its interaction with copper forming CuCl. Copper monochloride reacts with silica forming an intermediate product $SiCl_2$. The removal of CuCl from the reaction zone by means of hydration with hydrogen, results in the discontinuation of

Card 1/2

APPROVED FOR RELEASE: 07/12/2001 CIA-RDP86-00513R001135220010-6"

"APPROVED FOR RELEASE: 07/12/2001 CIA-RDP86-00513R001135220010-6

L 18899-63

ACCESSION NR: AP3006593

diethyldichlorosilane formation. Orig. art. has: 1 table, 1 figure and 6 formulas.

ASSOCIATION: none

SUBMITTED: 09Apr63 DATE ACQ: 27Sep63 ENCL: 00

SUB CODE: CH NO REF SOV: 005 OTHER: 001

Card 2/2

APPROVED FOR RELEASE: 07/12/2001 CIA-RDP86-00513R001135220010-6"

"APPROVED FOR RELEASE: 07/12/2001 CIA-RDP86-00513R001135220010-6

YERMAKOVA, A.; MOROZOV, N.G.

Absorption method of separating methylchlorosilanes and the recovery of unreacted methyl chloride in the process of direct synthesis. Zhur. prikl. khim. 37 no. 4:922-925 Ap '64. (MIRA 17:5)

APPROVED FOR RELEASE: 07/12/2001 CIA-RDP86-00513R001135220010-6"

"APPROVED FOR RELEASE: 07/12/2001 CIA-RDP86-00513R001135220010-6

L 31889-66 EWT(m)/EWP(j)/T RM

ACC NR: AP6012529 (A) SOURCE CODE: UR/0062/66/000/003/0475/0478

AUTHOR: Morozova, L. P.; Andrianov, K. A.; Morozov, N. G.; Golubtsov, S. A.

ORG: none

TITLE: Formation of alkyl(aryl)chlorosilanes during direct reaction of alkyl(aryl)chlorides with silicon. Communication 5. Effect of secondary decomposition process of methyldichlorosilane on the synthesis of methylchlorosilanes

SOURCE: AN SSSR. Izvestiya. Seriya khimicheskaya, no. 3, 1966, 475-478

TOPIC TAGS: catalyst, methyldichlorosilane, silane, organic synthesis

ABSTRACT: It was found that in decomposition reactions of methyldichlorosilane the most active catalysts are those which possess high selectivity in the synthesis of methyldichlorosilane. When the activity of catalysts in the synthesis is increased so that the yield increases from 2.2 to 25.5 g of methyldichlorosilane per kg of mass per hour, the degree of decomposition of methyldichlorosilane under identical conditions also increases from 4.0 to 67.2% respectively. This is explained by the fact that both synthesis and decomposition of methyldichlorosilane occur on the same active centers. It was shown experimentally that the degree of decomposition of methyldichlorosilane in a stream of methyl chloride decreases by about 1 order of magnitude as compared with

UDC: 542.91+546.287+542.97

Card 1/2

APPROVED FOR RELEASE: 07/12/2001 CIA-RDP86-00513R001135220010-6"

"APPROVED FOR RELEASE: 07/12/2001 CIA-RDP86-00513R001135220010-6

L 31889-66

ACC NR: AP6012529

decomposition in the stream of nitrogen, and even for the most active catalyst it does not exceed 10.8%. It is shown that chlorometnane is preferentially absorbed on the active centers of the catalyst. Passage of methyldichlorosilane through the reaction tube following the passage of chloromethane decreases the rate of decomposition by about a factor of 5 as compared with the experiment where methyldichlorosilane was passed first. Under direct synthesis conditions, in the silicon copper contact catalytic mass, when the active centers in the reaction zone are primarily occupied by the adsorbed chloromethane, decomposition of methyldichlorosilane proceeds to an insignificant extent, which explains the possibility of its synthesis as one of the major products of the reaction of silicon with chloromethane. Orig. art. has: 2 figures.

SUB CODE: 07/ SUBM DATE: 24Oct63/ ORIG REF: 005/ OTH REF: 001

Card 2/2

APPROVED FOR RELEASE: 07/12/2001 CIA-RDP86-00513R001135220010-6"

"APPROVED FOR RELEASE: 07/12/2001 CIA-RDP86-00513R001135220010-6

L 43896-66 EWT(m)/EWP(j) RM
ACC NR: AP6015624 (A) SOURCE CODE: UR/0413/66/000/009/0024/0024

INVENTOR: Morozov, N. G.; Selik, G. I.; Andrianov, K. A.; Golubtsov, S. A.

ORG: none

TITLE: Method of obtaining methychlorosilanes. Class 12, No. 181105

SOURCE: Izobreteniya, promyshlennyye obraztsy, tovarnyye znaki, no. 9, 1966, 24

TOPIC TAGS: methylchlorosilane, methyl chloride, silane

ABSTRACT: An Author Certificate has been issued for a method of obtaining methylchlorosilanes by the interaction of methyl chloride with a silicon copper contact mass in the presence of an activator. To increase the content of trimethylchlorosilane in the mixture of terminal methylchlorosilanes, sodium aluminate chloride is used as the activator. [Translation] [NT]

SUB CODE: 11/07/ SUBM DATE: 24Feb65/

Card 1/1 UDC: 547.419.5.07

APPROVED FOR RELEASE: 07/12/2001 CIA-RDP86-00513R001135220010-6"

"APPROVED FOR RELEASE: 07/12/2001 CIA-RDP86-00513R001135220010-6

ACCESSION NR: AP4032508 S/0080/64/037/004/0922/0925

AUTHORS: Yermakova, A.; Morozov, N. G.

TITLE: Absorption method of separating methylchlorosilane and collecting the unreacted methyl chloride in the direct synthesis process

SOURCE: Zhurnal prikladnoy khimii, v. 37, no. 4, 1964, 922-925

TOPIC TAGS: methylchlorosilane, direct synthesis, methyl chloride absorption, chlorobenzene absorbent, alkylchlorosilane synthesis, liquid gas phase equilibrium, nitrogen methylchloride chlorobenzene system nitrogen ethylchloride chlorobenzene system, nitrogen methyldichlorosilane chlorobenzene system, nitrogen dimethyldichlorosilane chlorobenzene system. Raoult's law, heat of solution

ABSTRACT: The solubility of methyl chloride, ethyl chloride and methylchlorosilane in chlorobenzene was determined in order to provide data for the direct synthesis process for alkylchlorosilanes in which the unreacted alkyl chlorides are collected in chlorobenzene The liquid-gas phase equilibria of the following systems were in-

Card 1/2

APPROVED FOR RELEASE: 07/12/2001 CIA-RDP86-00513R001135220010-6"

"APPROVED FOR RELEASE: 07/12/2001 CIA-RDP86-00513R001135220010-6

ACCESSION NR: AP4032508

vestigated at atmospheric pressure: nitrogen-methylchloride-chlorobenzene (at 0, 5, 10, 20 and 30C), nitrogen-ethyl chloride-chlorobenzene (at 10, 20 and 30C), nitrogen-methyldichlorosilane-chlorobenzene (at 20, 30C), and nitrogen-dimethyldichlorosilane-chlorobenzene (at 10, 20C). The solubility of methyl chloride and ethyl chloride in chlorobenzene is subject to Raoult's law. The solubility of the investigated chlorosilanes in chlorobenzene is significantly lower than in ideal solvents. The solubility in all the systems investigated decreased with increase in temperature. The heat of solution (kcal/kg) was calculated: methyl chloride 120; ethyl chloride 98.1; methyldichlorosilane 95.6; dimethyldichlorosilane 72. Thus the absorption of all these compounds in chlorobenzene is accompanied by evolution of large amounts of heat. Orig. art. has: 3 tables, 5 equations and 4 figures.

ASSOCIATION: None

SUBMITTED: 08Jun62 ENCL: 00

SUB CODE: OC NR REF SOV: 006 OTHER: 001

Card 2/2

APPROVED FOR RELEASE: 07/12/2001 CIA-RDP86-00513R001135220010-6"

"APPROVED FOR RELEASE: 07/12/2001 CIA-RDP86-00513R001135220010-6

LUGA, A.A., kandidat tekhnicheskikh nauk; PAVLOV, B.A., inzhener; POPKOV, P.A., inzhener; DOROFEYEV, F.I., inzhener; MOROZOV, N.I., inzhener; USACHEV, A.A., inzhener

Coffer construction by means of deeper sinking. Transp.stroi 5 no.5:23-24 Jl'55. (MLRA 8:12)

(Cofferdams)

APPROVED FOR RELEASE: 07/12/2001 CIA-RDP86-00513R001135220010-6"

"APPROVED FOR RELEASE: 07/12/2001 CIA-RDP86-00513R001135220010-6

KEDROV, V.V.; KARVATSKIY, M.B.; MOROZOV, N.I.

[Equipment for measuring deformations by wire strain gauges]. Apparatura dlia izmereniia deformatsii s pomoshch'iu provolochnykh tenzodatchikov. Moskva, Gos. izd-vo obor. promyshl. 1957. 42 p. (Moscow. TSentral'nyi aero-gidrodinamicheskii institut. Trudy, no. 698). (MIRA 11:7)

(Strain gauges)
(Deformations(Mechanics)--Measurement)

APPROVED FOR RELEASE: 07/12/2001 CIA-RDP86-00513R001135220010-6"

"APPROVED FOR RELEASE: 07/12/2001 CIA-RDP86-00513R001135220010-6

MOROZOV, N. L.

Karakul Sheep

Greater attention to preparation of roughage on state karakul farms. Kar. i zver., 5, No. 2, 1952.

Monthly List of Russian Accessions, Library of Congress, June 1952, Unclassified.

APPROVED FOR RELEASE: 07/12/2001 CIA-RDP86-00513R001135220010-6"

"APPROVED FOR RELEASE: 07/12/2001 CIA-RDP86-00513R001135220010-6

* For Degree of Doctor of Agricultural Sciences

APPROVED FOR RELEASE: 07/12/2001 CIA-RDP86-00513R001135220010-6"

"APPROVED FOR RELEASE: 07/12/2001 CIA-RDP86-00513R001135220010-6

USSR/Farm Animals - Small Horned Stock

Abs Jour : Ref Zhur - Biol., N [illegible], 1957, 69331

Author : Morozov, N.L.
Inst : -
Title : Ways for Further Improvement of the Forage Base in Karakul Breeding

Orig Pub : Karakulevodstvo i zver'kovodstvo, 1957, N. 2, 3-[illegible]

Abstract : For the rational utilization of pastures in Uzbek SSR, graphs of the fluctuation of feed reserves in the course of the year for basic pasture plants were made, and tables of variation of feed reserves according to months were provided. It is necessary to combine winter grazing of sheep with feed supplementation by hay, obtained through the development of field fodder supply on non-irrigated lands and those irrigated by artesian wells, and with utilization of concentrates. -- F.M. Kazantsev

Card 1/1

APPROVED FOR RELEASE: 07/12/2001 CIA-RDP86-00513R001135220010-6"

"APPROVED FOR RELEASE: 07/12/2001 CIA-RDP86-00513R001135220010-6

USSR/Farm Animals - Small Horned Cattle. 1-3

Abs Jour : Ref Zhur - Biol., No 18, 1955, 83410

Author : Morozov, N.L.
Inst : -
Title : Zeravshan Basin Pastures and Methods of Furthering Consolidation of Feeding Centers in Karakul Sheep Husbandry.

Orig Pub : Materialy po proizvodit. silam Uzbekistana, 1957, vyp. 3, 197-214.

Abstract : No abstract.

Card 1/1

APPROVED FOR RELEASE: 07/12/2001 CIA-RDP86-00513R001135220010-6"

"APPROVED FOR RELEASE: 07/12/2001 CIA-RDP86-00513R001135220010-6

USSR

basis of artesian irrigation.

APPROVED FOR RELEASE: 07/12/2001 CIA-RDP86-00513R001135220010-6"

"APPROVED FOR RELEASE: 07/12/2001 CIA-RDP86-00513R001135220010-6

APPROVED FOR RELEASE: 07/12/2001 CIA-RDP86-00513R001135220010-6"

"APPROVED FOR RELEASE: 07/12/2001 CIA-RDP86-00513R001135220010-6

1ST AND 2ND ORDERS

PROCESSES AND PROPERTIES INDEX

10

Ca

Catalytic production of glacial acetic acid from acetaldehyde. M. Va. Kagan and N. M. Mosesov. *J. Applied Chem.* (U. S. S. R.) 6, 400-12(1933).—Oxidation of AcH to AcOH with O_2 in presence of Mn with or without Fe, Co, Cr or Cu, was studied. The reaction has an induction period. Exptl. data are given in details. V. K.

ASM-SLA METALLURGICAL LITERATURE CLASSIFICATION

APPROVED FOR RELEASE: 07/12/2001 CIA-RDP86-00513R001135220010-6"

"APPROVED FOR RELEASE: 07/12/2001 CIA-RDP86-00513R001135220010-6

CA

10

Acetic acid. M. Ya Kagan and N. M. Morozov. Russ. 36,405, May 31, 1934. AcH is oxidized in the presence of the usual catalysts, such as Mn, Co, V or other salts with the addn. of HNO_3 or its salts.

ASM-SLA METALLURGICAL LITERATURE CLASSIFICATION

APPROVED FOR RELEASE: 07/12/2001 CIA-RDP86-00513R001135220010-6"

"APPROVED FOR RELEASE: 07/12/2001 CIA-RDP86-00513R001135220010-6

CA

2

Vapor pressure of binary mixtures acetaldehyde-water and acetaldehyde-acetic acid. N. M. Morozov, M. Ya. Kagan and E. S. Grosshlyat. *J. Gen. Chem.* (U. S. S. R.) 4, 1322-6(1934). - Distn. isotherms for the systems: CH_3CHO-H_2O and CH_3CHO-AcOH were studied at 10° and 20°. With CH_3CHO-H_2O, the partial pressures, corresponding to concns. of CH_3CHO in solns. (in moles %) 0, 4.9, 8.2, 9.5, 10.5, 27.05, 46.6, 48.8 and 100, were, for CH_3CHO and H_2O, resp., at 10°: 0 and 9.21, 74.5 and 10.0, 113.3 and 14.3, 128.05 and 14.46, 139.8 and 15.65, 268.3 and 18.2, 363.4 and 18.2, 373.2 and 17.04, 503.4 and 0 mm. At 20° the pressures corresponding to CH_3CHO concns. of 0, 5.4, 8.8, 12.9, 19.0, 21.8, 37.0 and 100, were: 0 and 17.53, 125.2 and 18.3, 206.0 and 20.9, 295.2 and 22.2, 406.8 and 23.9, 432.62 and 24.17, total pressure 542.3, 0 and 721.0, resp. In the system CH_3CHO-AcOH, only total pressures are given for concns. of CH_3CHO (in moles %) 7.55, 10.0, 20.7, 39.2, 54.1, 80.9 and 100, at 10°: 54.6, 72.0, 140.5, 238.0, 309.0, 425.0 and 503.4, resp.; at 20°, for CH_3CHO concns. of 8.8, 27.0, 39.1, 53.9 and 100, total pressures are: 90.7, 232.6, 325.5, 429.6 and 721.0, resp.

S. L. Madorsky

ASM-SLA METALLURGICAL LITERATURE CLASSIFICATION

APPROVED FOR RELEASE: 07/12/2001 CIA-RDP86-00513R001135220010-6"

"APPROVED FOR RELEASE: 07/12/2001 CIA-RDP86-00513R001135220010-6

1ST AND 2ND ORDERS

PROCESSES AND PROPERTIES INDEX

3RD AND 4TH ORDERS

BC

Sorption properties of mixed catalysts. I. Sorption of ammonia on ammonia catalyst and the rôle of the promoter. M. J. KAGAN, N. M. MOROZOV, and O. M. POTURNOVSKAJA (Acta Physicochim. U.R.S.S., 1936, 5, 491–508).—NH_3 is adsorbed by Al_2O_3 at 400—740°, the amount adsorbed decreasing with rise of temp. The heats of adsorption are 30,000 and 18,000 g.-cal when the adsorbed NH_3 amounts to 2 and 6 c.c. per g. of Al_2O_3, respectively. Above 500° the adsorbed NH_3 decomposes into H and NH_3, which is retained in the adsorbed layer. The addition of K_2O to Al_2O_3 reduces the heat of adsorption and the adsorption capacity. From data for mixtures of Fe and Al_2O_3, with and without K_2O, it is inferred that Al_2O_3, by adsorbing NH_3, inhibits, and that K_2O, by reducing the adsorption capacity of Al_2O_3, promotes, the catalytic action of Fe in the synthesis of NH_3.

C. R. H

ASM-SLA METALLURGICAL LITERATURE CLASSIFICATION

APPROVED FOR RELEASE: 07/12/2001 CIA-RDP86-00513R001135220010-6"

"APPROVED FOR RELEASE: 07/12/2001 CIA-RDP86-00513R001135220010-6

Ca

2

Sorptive properties of mixed catalysts I Sorption of ammonia on synthetic-ammonia catalysts in connection with the function of promoters M Ya Kagan, N M Morozov and O M Podurovskaya. *J Phys Chem U. S. S R* 8, 677-88 (1936) Pure Al_2O_3 has a high adsorptive capacity for NH_3 up to 600-700°, with a heat of adsorption of 30 Cal mol for 2 cc per g Al_2O_3, or 18 Cal. for 6 cc./g. of Al_2O_3 In the adsorption layer at 500° NH_3 breaks up into H and a surface-bound radical Addn of K_2O to the Al_2O_3 decreases the sorptive capacity and the heat of adsorption to about two thirds Fe addns also decrease adsorption to about one third with a smaller effect at higher temps F H Rathmann

ASM-SLA METALLURGICAL LITERATURE CLASSIFICATION

APPROVED FOR RELEASE: 07/12/2001 CIA-RDP86-00513R001135220010-6"

"APPROVED FOR RELEASE: 07/12/2001 CIA-RDP86-00513R001135220010-6

1ST AND 2ND ORDERS

PROCESSES AND PROPERTIES INDEX

3RD AND 4TH ORDERS

SA

A 54 d

3303. **Sorption of Carbon Monoxide by Alumina.** N. M. Morozov. *Acta Physicochimica*, 6, 5, pp. 719–742, 1937. *In English.*—The existence of two kinds of sorption of CO on alumina in different temperature regions and with different heat effects and activation energies is shown. The sorption processes in both temperature regions are complex. Both in the case of sorption and in the case of desorption the general kinetics are determined by the stage of diffusion. It has been found from the temperature dependence of the velocity constant that at low temperatures the energy of activation of desorption is $E_d'=9900$ cal./mol., and at high temperatures the activation energy of sorption is $E_s=19,100$ cal./mol., and that of desorption $E_d'=27,400$ cal./mol. The heat effects of sorption computed from the isotherms are as follows: at low temperatures about 11,000—7000 cal. at high temperatures about 16,000—10,000 for various degrees of covering of the surface. It has been shown by analysis of the experimental results that the diffusion phenomenon which manifests itself in both temperature regions is a surface migration of adsorbed molecules from more active to less active spots of the surface. [See also Abstract 1888 (1935).] AUTHOR.

ASM-SLA METALLURGICAL LITERATURE CLASSIFICATION

APPROVED FOR RELEASE: 07/12/2001 CIA-RDP86-00513R001135220010-6"

"APPROVED FOR RELEASE: 07/12/2001 CIA-RDP86-00513R001135220010-6

1ST AND 2ND ORDERS

PROCESSES AND PROPERTIES INDEX

BC

A-1

Kinetics of sorption. II. Sorption of carbon monoxide on alumina. N. M. Morozov (J. Phys. Chem. Russ., 1937, 9, 641—658).—The velocity of sorption between −50° and 450° has been measured. Two types have been observed, one below 250—300°, and the other above 200°. The first is a rapid process (activation energy of desorption 9·9 kg.-cal. per mol.), the second a slower one (activation energy 19·1 kg.-cal. for sorption, 27·4 kg.-cal. for desorption). Sorption isothermals have been determined at −15° to 40°; calc. heat vals. are 1·1 to 0·7 kg.-cal. for the high-temp. sorption and 1·6 to 1·0 kg.-cal. for the low-temp. sorption.

E. R.

ASM-SLA METALLURGICAL LITERATURE CLASSIFICATION

APPROVED FOR RELEASE: 07/12/2001 CIA-RDP86-00513R001135220010-6"

"APPROVED FOR RELEASE: 07/12/2001 CIA-RDP86-00513R001135220010-6

2

Sorption properties of mixed catalysts. II. Desorption of ammonia by the poisoning of ammonia catalysts with oxygen-containing gases. N. M. Morozov and M. Ya. Kagan. *Acta Physicochim. U. R. S. S.* 8, 549-64 (1938); cf. *C. A.* 31, 2078[1]. The abundant liberation of NH_3 in poisoning of NH_3 catalysts with O-contg. gases in presence of H is due to acceleration of the reduction of the N adsorbed on the surface of the catalyst. The rate of reduction for catalyst $Fe + Al_2O_3 + K_2O$ (I) is greater than that for $Fe + Al_2O_3$ (II), but the total amt. of N reduced is greater for II than for I. B. C. P. A.

METALLURGICAL LITERATURE CLASSIFICATION

APPROVED FOR RELEASE: 07/12/2001 CIA-RDP86-00513R001135220010-6"

"APPROVED FOR RELEASE: 07/12/2001 CIA-RDP86-00513R001135220010-6

MOROZOVA, N. M.

USSR/Chemistry - Organic Synthesis
Chemistry - Grignard Reaction

Jan 49

"Extraction of Alcohols From the Oxides of Olefins by the Grignard Method: I, Synthesis of 2,2-Dimethylbutanol-4 and 2,2-Dimethylpentanol-5 From Ethylene Oxide, and Heptanol-6 and 2-Methylhezanol-2 From Propylene Oxide," M. S. Malinovskiy, Students Ye. Ye. Volkova, N. M. Morozova, Lab of Org Chem, Gor'kiy State U, 3 3/4 pp

"Zhur Obshch Khim" Vol XIX, No 1

In the first reaction, respective yields are 13.2% and 33.3%; in the latter, 30% and 30%. Presents most probable diagram for formation of these alcohols. Submitted 9 Jun 48

58/49T36

APPROVED FOR RELEASE: 07/12/2001 CIA-RDP86-00513R001135220010-6"

"APPROVED FOR RELEASE: 07/12/2001 CIA-RDP86-00513R001135220010-6

TEMKIN, M.I.; MOROZOV, N.M.; PYZHEV, V.M. [deceased]; APEL'BAUM, L.O.; LUK'YANOVA, L.I.; DEMIDKIN, V.A.

Oxidation of ammonia on a nonplatinum catalyst. Probl. fiz.khim. no.2:14-26 '59. (MIRA 13:7)

1. Laboratoriya khimicheskoy kinetiki Nauchno-issledovatel'skogo fiziko-khimicheskogo instituta im. L.Ya. Karpova.
(Ammonia) (Cobalt oxide) (Oxidation)

APPROVED FOR RELEASE: 07/12/2001 CIA-RDP86-00513R001135220010-6"

"APPROVED FOR RELEASE: 07/12/2001 CIA-RDP86-00513R001135220010-6

PSHEZHETSKIY, S.Ya.; KAMENETSKAYA, S.A.; GRIBOVA, Ye.I.; PANKRATOV, A.V.; MOROZOV, N.M.; POSPELOVA, I.N.; APIN, A.Ya.; SIRYATSKAYA, V.N.; SLAVINSKAYA, N.A.; CHEREDNICHENKO, V.M.

Kinetics of the decomposition and explosion of ozone.
Probl.fiz.khim. no.2:27-38 '59. (MIRA 13:7)

1. Laboratoriya kinetiki gazovykh reaktsiy Nauchno-issledovatel'skogo fiziko-khimicheskogo instituta im. L.Ya.Karpova.
(Ozone) (Explosions)

APPROVED FOR RELEASE: 07/12/2001 CIA-RDP86-00513R001135220010-6"

"APPROVED FOR RELEASE: 07/12/2001 CIA-RDP86-00513R001135220010-6

5(4)

AUTHORS: Sokolova, D. F., Morozov, N. M., Temkin, M. I.

SOV/76-33-2-37/45

TITLE: Kinetics of Ammonia Synthesis at Low Pressure and Under Conditions of Diffusion Retardation (Kinetika sinteza ammiaka pri nizkikh davleniyakh v usloviyakh diffuzionnogo tormozheniya)

PERIODICAL: Zhurnal fizicheskoy khimii, 1959, Vol 33, Nr 2, pp 471-479 (USSR)

ABSTRACT: The question of the influence of diffusion phenomena on the rate of synthesis of ammonia was investigated for the first time by V. A. Royter (Ref 1), and the most recent experiments on this question (Refs 2-7) have showed that the diffusion retardation must absolutely be considered. Investigations on the role of the diffusion factors in the ammonia synthesis were carried out by V. N. Shishkova, I. P. Sidorov and M. I. Temkin (Ref 9) at pressures of 100-300 atm using industrial catalysts and the flowing-through-circulation method. The present paper shows that the character of the diffusion process in this latter type of investigation is different at atmospheric or lower pressures than at high pressures. As opposed to the

Card 1/3

APPROVED FOR RELEASE: 07/12/2001 CIA-RDP86-00513R001135220010-6"

"APPROVED FOR RELEASE: 07/12/2001 CIA-RDP86-00513R001135220010-6

method in reference 8 the flowing-through-circulation system has two circulation cycles (Fig 1). The reaction rate was determined from an amount of ammonia frozen out of a supplementary cycle. The catalyst used was a melted magnetite which had been treated with a nitrogen-hydrogen mixture and which had Al_2O_3 and K_2O added to it. The experiments were carried out by using a nitrogen-hydrogen mixture (in stoichiometric ratio) at 350-500° and with pressures of 1.0, 0.5 and 0.25 atm at various rates of diffusion (Table 1). The reaction kinetics were investigated in the diffusion area on a uniformly spherical catalyst (diameter = 1.2 cm) at 50-500° C and the above mentioned pressures with a rate of gas diffusion of 3000 - 15000 $hour^{-1}$. The experiments indicate two limiting cases for the course of the reaction: in terms of kinetics (small-grained catalyst) the yield of the catalyst is proportional to its volume and in terms of the inner diffusion (coarse-grained catalyst) the yield is proportional to the outer surface of the catalyst particle. A comparison of the results obtained with the small-grained catalyst (Table 3)

APPROVED FOR RELEASE: 07/12/2001 CIA-RDP86-00513R001135220010-6"

"APPROVED FOR RELEASE: 07/12/2001 CIA-RDP86-00513R001135220010-6

with those obtained with the coarse-grained catalysts yield the value of $D^* = 1 \cdot 10^{-2}$ cm^2/sec for the effective diffusion coefficient of ammonia in the catalyst pores, according to equation (14) and at 1 atm pressure. This value apparently corresponds to the transformation range between the Knudsen and the usual diffusion, and defines the limit of kinetic diffusion. Using D^* the maximum diameter of the catalyst which will still allow the synthesis to proceed without retardation can be calculated:

$$a_{limit} = \sqrt{D^* \tau} \quad (\tau = \text{time of contact})$$

There are 2 figures, 3 tables, and 13 references, 10 of which are Soviet.

ASSOCIATION: Akademiya nauk SSR, Fiziko-khimicheskiy institut im. L. Ya. Karpova, Moskva (Academy of Sciences, USSR Physical-Chemical Institute imeni I. Ya. Karpov, Moscow)

SUBMITTED: August 7, 1957

APPROVED FOR RELEASE: 07/12/2001 CIA-RDP86-00513R001135220010-6"

"APPROVED FOR RELEASE: 07/12/2001 CIA-RDP86-00513R001135220010-6

5(4)

AUTHORS: Apel'baum, L. O., Bel'shteyn, A. I., SOV/76-33-2-45/45
Kul'kova, N. V., Morozov, N. M.

TITLE: Mikhail Isaakovich Temkin (Mikhail Isaakovich Temkin). (On His 50th Birthday) (K 50-letiyu so dnya rozhdeniya)

PERIODICAL: Zhurnal fizicheskoy khimii, 1959, Vol 33, Nr 2, pp 507-508 (USSR)

ABSTRACT: Professor M. I. Temkin dedicated more than 25 years of his scientific activity to the theoretical problems of physical chemistry. He first set forth the theory of the kinetic catalytic reactions on heterogeneous surfaces which is based on the logarithmic adsorption isothermal lines (Temkin isothermal lines). With this theory he and his collaborators were able to define kinetics and the mechanism of such important processes in chemical technology as the ammonia synthesis, the production of water gas, the gasification of coal, and others. For his investigations in the field of the linear relationship between the activation energy and the heat effects of heterogeneous catalytic processes and for his work on the processes of chemisorption Temkin received the premiya im. A. N. Bakha (Prize ament A. N. Bakh) in 1957. Temkin founded

Card 1/2

APPROVED FOR RELEASE: 07/12/2001 CIA-RDP86-00513R001135220010-6"

"APPROVED FOR RELEASE: 07/12/2001 CIA-RDP86-00513R001135220010-6

Mikhail Isaakovich Temkin. (On His 50th Birthday) SOV/76-33-2-45/45

the concept of "adsorption of high intensity" and explained the catalytic oxidation of ethanol as an example of it. Temkin was the first to obtain a general, theoretical expression for the absolute rate of reaction on surfaces of solid bodies, which is of fundamental importance in the theory of catalysis. M. I. Temkin also showed that the activation energy of electrochemical processes can be determined theoretically and experimentally, and without difficulty, in relation to the absolute potential. Temkin's ion theory of melted salts and metallurgical slags is well-known in his own country and in foreign countries. His investigations in the field of thermoelectric phenomena in electrolyte solutions and his concept of "ions agitated by entropy" have been confirmed in the papers by English authors. Several papers of M. I. Temkin are concerned with the thermodynamic properties of real gas mixtures. From 1939 to 1949 Temkin was Editor of the Zhurnal fizicheskoy khimii (Periodical of Physical Chemistry). He was awarded the Order of the Red Banner of Work and other Orders of Honor. There is 1 figure.

Card 2/2
USCOMM-DC-60795

APPROVED FOR RELEASE: 07/12/2001 CIA-RDP86-00513R001135220010-6"

"APPROVED FOR RELEASE: 07/12/2001 CIA-RDP86-00513R001135220010-6

TEMKIN, M.I.; MOROZOV, N.M.; SHAPATINA, Ye.N.

Ammonia synthesis when moving off equilibrium. Part 2. Kin.i kat. 4 no.2:260-269 Mr-Ap '63. (MIRA 16:5)

1. Fiziko-khimicheskiy institut imeni L.Ya.Karpova.
(Ammonia) (Iron catalysts)
(Phase rule and equilibrium)

APPROVED FOR RELEASE: 07/12/2001 CIA-RDP86-00513R001135220010-6"

"APPROVED FOR RELEASE: 07/12/2001 CIA-RDP86-00513R001135220010-6

NAKHMANOVICH, M.L.; MOROZOV, N.M.; BUADZE, L.G.; TEMKIN, M.I.

Kinetics of the catalytic exchange of deuterium between water vapor and hydrogen on various surfaces. Dokl. AN SSSR 148 no.6:1346-1349 F '63. (MIRA 16:3)

1. Fiziko-khimicheskiy institut im. L.Ya.Karpova. Predstavleno akademikom N.M.Zhavoronkovym.
(Catalysis) (Water vapor) (Deuterium)

APPROVED FOR RELEASE: 07/12/2001 CIA-RDP86-00513R001135220010-6"

"APPROVED FOR RELEASE: 07/12/2001 CIA-RDP86-00513R001135220010-6

APPROVED FOR RELEASE: 07/12/2001 CIA-RDP86-00513R001135220010-6"

"APPROVED FOR RELEASE: 07/12/2001 CIA-RDP86-00513R001135220010-6

NAUMOV, L.B.; MOROZOV, N.M.

Cancer of the stomach herniating into a postoperative hernia. Vop.onk. 4 no.2:224-225 '58. (MIRA 12:8)

1. Iz Magnitogorskogo onkologicheskogo dispansera (glavnyy varch - O.G.Rudenko) Adres Naumova: g.Ufa, ul.Dostoyevskogo, d.123, Institut gigiyeny i profzaboleveniy.

(STOMACH NEOPLASMS, case report
cancer in a stomach herniating into a postop. abdom. hernia, surg. & recovery (Rus))
(HERNIA, VENTRAL, case report
same)

APPROVED FOR RELEASE: 07/12/2001 CIA-RDP86-00513R001135220010-6"