"APPROVED FOR RELEASE: 07/12/2001 CIA-RDP86-00513R001135320017-8

MOSKALENKO, Yu.Ye.

Modern medical radio electronics. Usp. sov. biol. 51 no.1:125-128 Ja-F '61. (MIRA 14:3)

(MEDICAL ELECTRONICS)

APPROVED FOR RELEASE: 07/12/2001 CIA-RDP86-00513R001135320017-8"

"APPROVED FOR RELEASE: 07/12/2001 CIA-RDP86-00513R001135320017-8

MOSKALENKO, Yu.Ye.; BAYEVSKIY, R.M.; GAZENKO, O.G.

Methods of studying blood circulation in the brain under the conditions of a changed gravitational field. Probl.kosm.biol. 1:400-404 '62. (MIRA 15:12)
, (GRAVITY--PHYSIOLOGICAL EFFECT)(BRAIN--BLOOD SUPPLY)

APPROVED FOR RELEASE: 07/12/2001 CIA-RDP86-00513R001135320017-8"

"APPROVED FOR RELEASE: 07/12/2001 CIA-RDP86-00513R001135320017-8

MOSKALENKO, Yu.Ye.

Possibility for an experimental evaluation of the blood supply to the brain under condtions of a changed gravitational field. Probl.kosm.biol. 2:407-416 '62. (MIRA 16:4)

(BRAIN--BLOOD SUPPLY)
(GRAVITY--PHYSIOLOGICAL EFFECT)

APPROVED FOR RELEASE: 07/12/2001 CIA-RDP86-00513R001135320017-8"

"APPROVED FOR RELEASE: 07/12/2001 CIA-RDP86-00513R001135320017-8

S/239/62/048/002/002/002
I015/I215

ATHOR: Moskalenko, Yu. Ye.

TITLE: Optimal conditions for the electroplethysmographical recording of human body regions and organs

PERIODICAL: Fiziologicheskiy zhurnal SSSR im. I.M. Sechenova, v. 48, no. 2, 1962, 214-218

TEXT: The selection of optimal biophysical conditions for electroplethysmographic recording is still an unsolved problem. Experiments on man confirmed the theoretical biophysical considerations that the frequency and voltage are the critical electrical parameters in obtaining optimal results. It was found, by using an apparatus set of ZG-11 generator, MPP-300 bridge and EO-7 and MPO-2 oscillographs, that a frequency of 100-150 kcyc/min and a voltage of 3v on the bridge (not more than 2v on the electrodes) were optimal conditions. There 3 tables and 3 figures.

ASSOCIATION: Institut evolutsionnoy fiziologii im. I. M. Sechenova AN SSSR, Leningrad (Institute of Evolutionary Physiology im. I. M. Sechenov. AS USSR. Leningrad).

SUBMITTED: February 19, 1961.

Card 1/1

APPROVED FOR RELEASE: 07/12/2001 CIA-RDP86-00513R001135320017-8"

"APPROVED FOR RELEASE: 07/12/2001 CIA-RDP86-00513R001135320017-8

MOSKALENKO, YU. YE.

AID Nr. 980-13 31 May

HEMODYNAMICS OF BRAIN DURING VARIATIONS IN GRAVITATIONAL-FIELD DIRECTION (USSR)

Moskalenko, Yu. Ye., N. N. Benua, and O. V. Graunov. Fiziologicheskiy zhurnal SSSR imeni I. M. Sechenova, v. 49, no. 4, 1963, 405-411.

S/239/63/049/004/001/001

Experiments have been conducted with rats to study changes in intracranial hemodynamics after placing the body in different spatial positions in the vertical plane. EPG made with the head down showed increased resistance in the cranial cavity. The amplitude of pulse oscillations decreased slightly after the position was changed, then rose above the initial level and sometimes remained at the higher level after the body assumed the normal position. The amplitude of respiratory waves also increased. With the head up intracranial electrical resistance decreased, the amplitude of pulse oscillations was usually unchanged, and the amplitude of respiratory waves decreased. The EPG showed marked intensification of waves of the third order. Changes in the electrical resistance of the cranial cavity indicated that the brain was filling with blood. The dynamics of blood filling after changes in the direction of the gravitational field indicated a regulatory action. Fluctuation in the brain's vascular tonus indicated the relative autonomy of homeostasis in the brain. [AB]

Card 1/1

APPROVED FOR RELEASE: 07/12/2001 CIA-RDP86-00513R001135320017-8"

"APPROVED FOR RELEASE: 07/12/2001 CIA-RDP86-00513R001135320017-8

GRANAT, L.N.; MOSKALENKO, Yu.Ye.

Changes in the hemodynamics in the [illegible] of heat and cold stimulation. [illegible] 165.

.. Institut [illegible] tal may [illegible] Leningrad.

APPROVED FOR RELEASE: 07/12/2001 CIA-RDP86-00513R001135320017-8"

"APPROVED FOR RELEASE: 07/12/2001 CIA-RDP86-00513R001135320017-8

L 11785-66 EWT(1)/FS(v)-3 SCTB DD

ACC NR: AP6001111 SOURCE CODE: UR/0239/65/051/012/1474/1477

AUTHOR: Shurubura, A. A.; Barbashova, Z. I.; Moskalenko, Yu. Ye.

ORG: Institute of Evolutionary Physiology im. I. M. Sechenova, AN SSSR, Leningrad (Institut evolyutsionnoy fiziologii AN SSSR)

TITLE: Cerebral blood flow in hypoxia-adapted rats subjected to acceleration

SOURCE: Fiziologicheskiy zhurnal SSSR, v. 51, no. 12, 1965, 1474-1477

TOPIC TAGS: acceleration, blood circulation, animal physiology, hypoxia, gravitational field, dynamic stress, centrifugation

ABSTRACT: Electroplethysmography was employed to study cerebral blood-flow dynamics in rats adapted to hypoxia in a pressure chamber for a month and then subjected to positive and negative horizontal acceleration of up to 2g for 10—30 sec. Plethysmographic changes in the adapted rats and in control rats exposed to acceleration of 1.2—1.4 g, which causes the blood to flow out of the head, were essentially the same. Above 1.5 g, the controls showed a distinct active physiological reaction directed to normalizing the blood flow in the cranial cavity within 2—5 sec of exposure. An increase in acceleration to 1.8—2.0 g caused the physiological component of the reaction to appear immediately after exposure and increased the volume of blood in the cranial cavity. In the rats adapted to hypoxia, this compensatory physiological reaction appeared much

Card 1/2 UDC: 612.133

APPROVED FOR RELEASE: 07/12/2001 CIA-RDP86-00513R001135320017-8"

"APPROVED FOR RELEASE: 07/12/2001 CIA-RDP86-00513R001135320017-8

L 11785-66

ACC NR: AP6001111

later, starting with acceleration of 1.8—2.0 g. The respiratory waves on the EPG for adapted animals showed little change following acceleration, whereas over 1.5 g, the amplitude of these waves in the controls decreased substantially. The superior tolerance of acceleration in the adapted rats is indicative of little change in respiration during and after exposure, a sign of marked resistance by cells in the respiratory center of the brain. The authors ascribe the high resistance to horizontal acceleration in the hypoxia-adapted animals to changes in the cerebral blood vessels and in cellular metabolism. These changes include increased oxygen consumption by brain cells with low partial pressure of oxygen, intensification of anaerobic glycolysis, and a nonspecific increase in resistance of the structure of the cellular elements subject to injury. The authors suggest that adaptation to hypoxia might be used as a means of conditioning the body to acceleration. Orig. art. has: 3 figures. [14]

SUB CODE: 06/ SUBM DATE: 30Dec63/ ORIG REF: 008/ OTH REF: 003

ATD PRESS: 4180

HW

Card 2/2

APPROVED FOR RELEASE: 07/12/2001 CIA-RDP86-00513R001135320017-8"

"APPROVED FOR RELEASE: 07/12/2001 CIA-RDP86-00513R001135320017-8

ACCESSION NR: AP4026727 S/0216/64/000/002/0280/0297

AUTHOR: Moskalenko, Yu. Ye.; Gazenko, O. G.; Shurubura, A. A.; Kas'yan, I. I.; Graunov, O. V.

TITLE: Dynamics of hemocirculatory parameters of the cerebrovascular system during longitudinal gravitational loads

SOURCE: AN SSSR. Izv. Seriya biologicheskaya, no. 2, 1964, 280-297

TOPIC TAGS: cerebral blood circulation, cerebrovascular hemocirculatory system, gravity acceleration, longitudinal gravitational load, blood pressure change, blood volume change, electroplethysmograph, data unit electrical system, cerebrospinal blood pressure change, central nervous system development, respiration movement, brain oxygen intensity, gravitational load sensitivity threshold, cerebrovascular mechanical regulation, cerebrovascular chemical regulation

ABSTRACT: In a series of 64 experiments changes in blood volume and pressure were studied in the cerebrovascular systems of dogs, cats, rabbits, and rats. In each of the experiments the animal was subjected to 15-20 tests on a rotating stand with longitudinal

Card 1/3

APPROVED FOR RELEASE: 07/12/2001 CIA-RDP86-00513R001135320017-8"

"APPROVED FOR RELEASE: 07/12/2001 CIA-RDP86-00513R001135320017-8

ACCESSION NR: AP4026727

gravitational loads up to + 1 g, and in some experiments animals were tested on a centrifuge with acceleration up to 10 g. Blood volume changes were measured by electroplethysmograph and blood pressure changes were recorded by tensoelectric manometers. Arterial pressure and respiratory movement were measured by data units, and oxygen intensity in the brain was determined by a polarographic method. Readings for all data units were registered on a K 12 21 oscillograph. Results show that the sensitivity threshold of the cerebrovascular system to longitudinal gravitational loads lies within limits of 0.2 to 0.5 g, depending on central nervous system development and the ecology of the animal. The active physiological reactions of the cerebrovascular system 5-10 sec after exposure to longitudinal gravitational loads are autoregulatory, with arterial pressure changes affecting vessel tone. With lack of oxygen and CO_2 accumulation in the brain 15-25 sec after exposure, compensatory reactions of a chemical regulatory nature appear. Orig. art. has: 13 figures, 3 tables.

ASSOCIATION: Institut evolyutsionnoy fiziologii im. I. M. Sechenova AN SSSR (Institute of Evolutionary Physiology AN SSSR)

Card 2/3

APPROVED FOR RELEASE: 07/12/2001 CIA-RDP86-00513R001135320017-8"

"APPROVED FOR RELEASE: 07/12/2001 CIA-RDP86-00513R001135320017-8

ACCESSION NR: AP4026727

SUBMITTED: 14Sep63 DATE ACQ: 22Apr64 ENCL: 00

SUB CODE: AM NO REF SOV: 009 OTHER: 022

Card 3/3

APPROVED FOR RELEASE: 07/12/2001 CIA-RDP86-00513R001135320017-8"

"APPROVED FOR RELEASE: 07/12/2001 CIA-RDP86-00513R001135320017-8

STEPANYAN, Ye. P.; MOSKALENKO, Yu. D.; KOSORUKOVA, N. Ya.

Prevention of thromboembolic complications in lung cancer. Grud. khir. no.5:89-94 '61. (MIRA 15:2)

1. Iz biokhimicheskoy laboratorii (zav. - doktor biologicheskikh nauk Ye. P. Stepanyan) i otdeleniya zabolevaniy legkikh (zav. - doktor meditsinskikh nauk N. I. Gerasimenko) Instituta grudnoy khirurgii (dir. - prof. S. A. Kolesnikov, nauchnyy rukovoditel' - akad. A. N. Bakulev) AMN SSSR. Adres avtorov: Moskva, Leninskiy prosp., d. 8. Institut serdechno-sosudistoy khirurgii AMN SSSR.

(LUNGS—CANCER) (EMBOLISM)

APPROVED FOR RELEASE: 07/12/2001 CIA-RDP86-00513R001135320017-8"

"APPROVED FOR RELEASE: 07/12/2001 CIA-RDP86-00513R001135320017-8

MOSKALENKO, Z.D.; FREYDIN, A.I.

Stratigraphy of Jurassic and Cretaceous sediments in the upper Amur Valley (Urka, Ol'doy, B.Never, and Burinda basins). Zap. LGI 47 no.2:3-13 '64. (MIRA 18:3)

APPROVED FOR RELEASE: 07/12/2001 CIA-RDP86-00513R001135320017-8"

"APPROVED FOR RELEASE: 07/12/2001 CIA-RDP86-00513R001135320017-8

PORTNYAGIN, E.A.; MOSKALENKO, Z.D.

Role of deep faults in the Mesozoic structure of the upper Amur Valley. Geol.sbor. [Lvov] no.9:94-107 '65. (MIRA 18:12)

APPROVED FOR RELEASE: 07/12/2001 CIA-RDP86-00513R001135320017-8"

"APPROVED FOR RELEASE: 07/12/2001 CIA-RDP86-00513R001135320017-8

MOSKALETS, A.A., inzh.; MIKHAYLENKO, P.A., tekhnik

Circuit for conveyor stopping by means of control push buttons mounted on the cutter loader. Ugol.prom. no.5:68-69 S-O '62. (MIRA 15:11)

1. Shakhta No.6-14 Krasnogvardeyskogo tresta ugol'nykh predpriyatiy Donbassa.
(Conveying machinery) (Remote control)

APPROVED FOR RELEASE: 07/12/2001 CIA-RDP86-00513R001135320017-8"

"APPROVED FOR RELEASE: 07/12/2001 CIA-RDP86-00513R001135320017-8

PROKO'YEV, V.N.; MOSKALETS, E.A.

Ectoparasites from the nests of house martins on the Dzhida River bank cliffs southwestern Transbaikalia. Dokl. Irk. gos. nauh.-issl. protivochum. inst. no.5:186-187 '63 (MIRA 18:1)

APPROVED FOR RELEASE: 07/12/2001 CIA-RDP86-00513R001135320017-8"

"APPROVED FOR RELEASE: 07/12/2001 CIA-RDP86-00513R001135320017-8

MOSKALETS, K.

More initiative in trade-union work. Sov.profsoiuzy 4 no.3: 20-24 Mr '56. (MLRA 9:7)

1.Predsedatel' Ukrainskogo respublikanskogo soveta profsoyuzov.
(Ukraine--Trade unions)

APPROVED FOR RELEASE: 07/12/2001 CIA-RDP86-00513R001135320017-8"

"APPROVED FOR RELEASE: 07/12/2001 CIA-RDP86-00513R001135320017-8

MOSKALETS, K.

Great rise in the productive activity of Ukrainian workers. (MIRA 10:11)
Sots.trud no.10:51-60 O '57.

1. Predsedatel' Ukrainskogo respublikanskogo Soveta profsoyuzov.
(Ukraine--Efficiency, Industrial)

APPROVED FOR RELEASE: 07/12/2001 CIA-RDP86-00513R001135320017-8"

"APPROVED FOR RELEASE: 07/12/2001 CIA-RDP86-00513R001135320017-8

MOSKALETS, K.

Administration of the branch committees under the new conditions. Sov.profsoiuzy 6 no.17:49-54 D '58. (MIRA 12:1)

1. Predsedatel' Ukrainskogo respublikanskogo soveta profsoyuzov.
(Ukraine--Trade unions)

APPROVED FOR RELEASE: 07/12/2001 CIA-RDP86-00513R001135320017-8"

"APPROVED FOR RELEASE: 07/12/2001 CIA-RDP86-00513R001135320017-8

MOSKALETS, K.F.

Interview. Support by all means mass inventing. Izobr. i rats. no.10:8-9 O '58. (MIRA 11:11)

1. Predsedatel' Ukrainskogo respublikanskogo soveta profsoyuzov. (Efficiency, Industrial)

APPROVED FOR RELEASE: 07/12/2001 CIA-RDP86-00513R001135320017-8"

"APPROVED FOR RELEASE: 07/12/2001 CIA-RDP86-00513R001135320017-8

MOSKALETS, K.F.

Toward the new glorious achievements. Okhr.truda i sots.strakh. no.5:8-13 My '59. (MIRA 12:9)

1. Predsedatel' Ukrainskogo respublikanskogo soveta profsoyuzov, chlen Prezidiuma Vsesoyuznogo tsentral'nogo soveta professional'nykh soyuzov. (Ukraine--Trade unions)

APPROVED FOR RELEASE: 07/12/2001 CIA-RDP86-00513R001135320017-8"

"APPROVED FOR RELEASE: 07/12/2001 CIA-RDP86-00513R001135320017-8

MOSKALETS, Konstantin Fedorovich [Moskalets', K.]; SUSHCHUK-SLYUSARENKO, Z., red.; KOPITKOVA, N. [Kopytkova, N.], tekhn.red.

[Trade unions of the Ukraine struggle for the carrying out of the seven-year plan] Profspilky Ukrainy v borot'bi za zdiisnennia semyrichky. Kyiv, Derzh.vyd-vo polit.lit-ry, 1960. 89 p. (MIRA 13:6)

(Ukraine--Trade unions) (Efficiency, Industrial)

APPROVED FOR RELEASE: 07/12/2001 CIA-RDP86-00513R001135320017-8"

"APPROVED FOR RELEASE: 07/12/2001 CIA-RDP86-00513R001135320017-8

MOSKALETS, K. I.

MOSKALETS, K. I. -- "Protection from Leakage for Branched Electrical Circuits of Sections of Coal Pits." Min Higher Education Ukrainian SSR, Donets Order of Labor Red Banner Industrial Inst imeni N. S. Khrushchev, Stalino, 1955 (Dissertation For the Degree of Doctor of Technical Sciences)

SO: Knizhnaya letopis', No. 37, 3 September 1955

APPROVED FOR RELEASE: 07/12/2001 CIA-RDP86-00513R001135320017-8"

"APPROVED FOR RELEASE: 07/12/2001 CIA-RDP86-00513R001135320017-8

MOSKALETS K.I.

LEYBOV, R.M., prof.; MOSKALETS, K.I., kand.tekhn.nauk

Preventing current leakage. Bezop.truda v prom. 2 no.4:5-8 Ap '58. (MIRA 11:4)

1. Donetskiy industrial'nyy institut.
(Electricity in mining)

APPROVED FOR RELEASE: 07/12/2001 CIA-RDP86-00513R001135320017-8"

"APPROVED FOR RELEASE: 07/12/2001 CIA-RDP86-00513R001135320017-8

MOSKALETS, K.I., kand. tekhn. nauk.

Conditions providing for safety in the operation of the electric system in Moscow Basin mines. Izv. vys. ucheb. zav.; gor. zhur. no.8:114-121 '58. (MIRA 12:5)

1. Donetskiy industrial'nyy institut.
(Moscow Basin--Electricity in mining)

APPROVED FOR RELEASE: 07/12/2001 CIA-RDP86-00513R001135320017-8"

"APPROVED FOR RELEASE: 07/12/2001 CIA-RDP86-00513R001135320017-8

KOSKALETS, K.I., kand.tekhn.nauk

Protection from leakage in forked electric circuits of non-gaseous mine sections. Izv.vys.ucheb.zav.; gor.zhur. no.10: 116-122 '58. (MIRA 12:8)

1. Donetskiy industrial'nyy institut.
(Electricity in mining) (Electric currents, leakage)

APPROVED FOR RELEASE: 07/12/2001 CIA-RDP86-00513R001135320017-8"

"APPROVED FOR RELEASE: 07/12/2001 CIA-RDP86-00513R001135320017-8

MOSKALETS, L.I.

Hardening files on sonic frequencies. Stan.i instr. 29 no.1: 25-26 Ja '58. (MIRA 11:1)

(Metals--Hardening)
(Induction heating)

APPROVED FOR RELEASE: 07/12/2001 CIA-RDP86-00513R001135320017-8"

"APPROVED FOR RELEASE: 07/12/2001 CIA-RDP86-00513R001135320017-8

MOSKALETS, N. D., SEGAL', L. S., MESHCHENKO, V. M., KULINICH, I. M.

"Epidemiological characteristics of the focus of tick-borne encephalitis in the Transcarpathian oblast." Page 84

Desyatoye soveshchaniye po parazitologicheskim problemam i prirodnoochagovym boleznyam. 22-29 Oktyabrya 1959 g. (Tenth Conference on Parasitological Problems and Diseases with Natural Foci 22-29 October 1959), Moscow-Leningrad, 1959, Academy of Medical Sciences USSR and Academy of Sciences USSR, No. 1 254pp.

APPROVED FOR RELEASE: 07/12/2001 CIA-RDP86-00513R001135320017-8"

"APPROVED FOR RELEASE: 07/12/2001 CIA-RDP86-00513R001135320017-8

MOSKALETS N.D.

Studies on synanthropic flies in Uzhgorod in the Transcarpathian region of the Ukraine. Med.paraz.i paraz.bol. 29 no.5:575-578 S-O '60. (MIRA 13:12)

1. Iz Zakarpatskoy oblastnoy sanitarno-epidemiologicheskoy stantsii (glavnyy vrach G.K. Tokach).
(UZHGOROD—FLIES)

APPROVED FOR RELEASE: 07/12/2001 CIA-RDP86-00513R001135320017-8"

"APPROVED FOR RELEASE: 07/12/2001 CIA-RDP86-00513R001135320017-8

KOMAROV, N.G., nauchnyy sotrudnik; FOKIN, A.D., nauchnyy sotrudnik; BASHMAKOV, A.I., nauchnyy sotrudnik; RUDAKOVA, A.G., nauchnyy sotrudnik; MOSKALETS, Ye.S., nauchnyy sotrudnik; NEDEL'SKIY, V.I., red.; PORFIR'YEV, B.A., red.; SKLYAROVA, Ye.I., tekhn.red.

[City of Kirov; reference book] Gorod Kirov; spravochnik. Kirov, Kirovskoe knizhnoe izd-vo, 1957. 150 p. (MIRA 13:8)

1. Kirovskiy oblastnoy krayevedcheskiy muzey (for Komarov, Fokin, Bashmakov, Rudakova, Moskalets). 2. Direktor Kirovskogo oblastnogo krayevedcheskogo muzeya (for Nedel'skiy).
(Kirov)

APPROVED FOR RELEASE: 07/12/2001 CIA-RDP86-00513R001135320017-8"

"APPROVED FOR RELEASE: 07/12/2001 CIA-RDP86-00513R001135320017-8

KOMAROV, N.G.; SOBOLEV, V.A.; BASHMAKOV, A.I.; EMMAUSSKIY, A.V., kand. istor.nauk; RUDAKOVA, A.G.; MOSKALETS, Ye.S.; KUSHNEREV, K.Ya.; MOSHCHAKOV, V.A.; KARDAKOVA, Ye.A., red.; SKLYAROVA, Ye.I., tekhn.red.

[City of Kirov; a reference book] Gorod Kirov; spravochnik. Kirov, Kirovskoe knizhnoe izd-vo, 1959. 166 p. (MIRA 13:6)

(Kirov--Guidebooks)

APPROVED FOR RELEASE: 07/12/2001 CIA-RDP86-00513R001135320017-8"

"APPROVED FOR RELEASE: 07/12/2001 CIA-RDP86-00513R001135320017-8

MOSKALEV, A.

Methodological commissions and sections in operation. Prof.-tekh. obr. 20 no.7:28-29 Jl '63. (MIRA 16:10)

1. Zamestitel' nachal'nika otdela tekhnicheskogo obucheniya Moskovskogo avtozavoda imeni I.A.Likhacheva.

APPROVED FOR RELEASE: 07/12/2001 CIA-RDP86-00513R001135320017-8"

"APPROVED FOR RELEASE: 07/12/2001 CIA-RDP86-00513R001135320017-8

L 44009-66 EWP(w)/T-2 IJP(c) WW/TCH/EM

ACC NR: AP6029940 SOURCE CODE: UR/0413/66/000/015/0102/0102

INVENTOR: Besyadovskiy, Ye. K.; Moskalev, A. A.

ORG: none

TITLE: A system for remote measuring of the rigidity of flexible couplings in dynamically similar aircraft models. Class 42, No. 184494

SOURCE: Izobret prom obraz tov zn, no. 15, 1966, 102

TOPIC TAGS: measuring apparatus, scale model, wind tunnel instrumentation

ABSTRACT: An apparatus for measuring the rigidity of flexible couplings in dynamically similar aircraft models during wind tunnel tests is described. The apparatus contains an electric motor with a reductor which rotates the propeller fastened to two support bearings, and a panel with a busbar and electric contacts. The propeller is equipped with a shoe which on its upper portion has an interchangeable sleeve with various calibrated openings for wire (springs). On its lower portion, it has a balance arm with reciprocal contacts. After the shoe has moved a certain distance on the panel, the above contacts switch off the electric motor and thereby a preset wire length is fixed. This apparatus not only decreases the time necessary for an experiment but also increases the accuracy of results obtained. [BD]

SUB CODE: 01/ SUBM DATE: 04Jan65/ ATD PRESS: 5070

Card 1/1 UDC: 620.178

APPROVED FOR RELEASE: 07/12/2001 CIA-RDP86-00513R001135320017-8"

"APPROVED FOR RELEASE: 07/12/2001 CIA-RDP86-00513R001135320017-8

ACC NR: AM602908 Monograph UR/

Moskalev, Aleksandr Dmitriyevich (Colonel, Candidate of Military Sciences)

Radiation conditions and troop operations (Radiatsionnaya obstanovka i deystviya voysk) Moscow, Voyenizdat M-va obor. SSSR, 1966. 103 p. illus., tables, 15,000 copies printed.

TOPIC TAGS: radiation protection, radioactive contamination, ionizing radiation, radiation dosimetry, radioactive fallout, military operation, nuclear weapon biologic effect

PURPOSE AND COVERAGE: Radioactive contamination differs significantly from other harmful effects of nuclear weapons: it is distributed over large areas, remains active for a long time, and has specific effects on the human organism. This booklet describes what consideration should be given to radioactive conditions, and what measures should be taken in the presence of radioactive contamination. The physical bases of radioactive contamination, the estimation of radiation conditions, and rules for action in contaminated areas are covered. It is intended for military personnel.

Card 1/3 UDC: 355.421:613.648

APPROVED FOR RELEASE: 07/12/2001 CIA-RDP86-00513R001135320017-8"

"APPROVED FOR RELEASE: 07/12/2001 CIA-RDP86-00513R001135320017-8

ACC NR: AM6029^08

TABLE OF CONTENTS:

Introduction -- 3
Ch. I. Ionizing radiation and radioactive contamination -- 6
Properties of ionizing radiation -- 7
Sources of radioactive contamination -- 14
Decay of radioactive substances -- 16
The action of radioactive radiation on the living organism -- 18
Ch. II. Radiation conditions -- 25
Radioactive contamination of an area -- 25
Radioactive contamination of the air -- 30
Radioactive contamination of water -- 31
Radioactive contamination of armaments, and technic l and other objects -- 31
The effect of fallout and topography on the nature of radioactive contamination of an area -- 33
The calculation of radiation conditions in the decisions of the commander -- 34
Ch. III. Sources of information on radiation conditions -- 37
Predicting regions of radioactive contamination -- 37
Radiation reconnaissance -- 50
Dosimetric control -- 55

Card 2/3

APPROVED FOR RELEASE: 07/12/2001 CIA-RDP86-00513R001135320017-8"

"APPROVED FOR RELEASE: 07/12/2001 CIA-RDP86-00513R001135320017-8

ACC NR: AM602908

Ch. IV. Troop operations in contaminated areas -- 61
Marching in contaminated areas -- 72
Attack in contaminated areas -- 77
Defense in contaminated areas -- 92

SUB CODE: 06, 18/ SUBM DATE: 03Nov65/

Card 3/3

APPROVED FOR RELEASE: 07/12/2001 CIA-RDP86-00513R001135320017-8"

"APPROVED FOR RELEASE: 07/12/2001 CIA-RDP86-00513R001135320017-8

DUBOVIK, V.N., st. prepodav.; MAMIN, A.U., kand. geol.-miner. nauk, dots.; OTTO, P.I.; RUMYANTSEVA, A.Ya., kand. geogr. nauk, ispolnyayushchiy obyazannosti dots.; SEREGIN, I.A., st. inzh.; MOSKALEV, A.F.; KOLESNIKOV, B.P., prof., doktor biol. nauk, rektor; OKOROKOV, V.I., kand. biol. nauk, dots.; KLIMENKO, R.A.; STARIKOVA, L.A., assistent; SHUMILOVA, V.Ya., assistent; MAKSIMOVA, Ye.A., dots.; KIRIN, F.Ye., kand. geogr. nauk, dots.; KUZNETSOVA, A.V., red.; MATVEYEV, A.M., red.; MOROZOV, V.K., red.; ROYKOVSKIY, I.M., red.; TYAZHEL'NIKOV, Ye.M., red.

[Nature of Chelyabinsk Province] Priroda Cheliabinskoi oblasti. Cheliabinsk, Yuzhno-Ural'skoe knizhnoe izd-vo, 1964. 241 p. (MIRA 18:7)

1. Kafedra geografii Chelyabinskogo pedagogicheskogo instituta (for Dubovik, Mamin, Rumyantseva, Kirin). 2. Nachal'nik geologicheskogo otdela Chelyabinskogo geologorazvedochnogo tresta (for Otto). 3. Chelyabinskaya gidrologicheskaya stantsiya (for Seregin). 4. Nachal'nik pochvennoy partii Chelyabinskoy zemleustroitel'noy ekspeditsii (for Moskalev). 5. Institut biologii Ural'skogo filiala AN SSSR (for Kolesnikov). 6. Kafedra zoologii Chelyabinskogo pedagogicheskogo instituta (for Okorokov, Starikova, Shumilova). 7. Chelyabinskiy rybnyy trest (for Klimenko).

APPROVED FOR RELEASE: 07/12/2001 CIA-RDP86-00513R001135320017-8"

"APPROVED FOR RELEASE: 07/12/2001 CIA-RDP86-00513R001135320017-8

MOSKALEV, A. G.

"Automatic Frequency Regulation in Power Systems." Thesis for degree of Cand. Technical Sci. Sub 27 Jun 49, Moscow Order of Lenin Power Engineering Inst imeni V. M. Molotov.

Summary 82, 18 Dec 52, Dissertations Presented for Degrees in Science and Engineering in Moscow in 1949. From Vechernyaya Moskva, Jan-Dec 1949.

APPROVED FOR RELEASE: 07/12/2001 CIA-RDP86-00513R001135320017-8"

"APPROVED FOR RELEASE: 07/12/2001 CIA-RDP86-00513R001135320017-8

USSR/Electricity - Frequency Regulators Jul 51
Magnetic Amplifiers

"The Magnetic-Filter Frequency Regulator (MFRCh-1)," A. G. Moskalev, Cand Tech Sci, Prof I. I Solov'yev, Cen Sci Res Elec Eng Lab of Min of Elec Power Stations

"Elektrichestvo" No 7, pp 11-18

This frequency regulator, for which Moskalev has been awarded Certificates of Authorship No 70439 and 87778, is based on the use of a band filter and magnetic amplifiers and does not contain moving elements or electron tubes. Tests of the 1st

199T15

USSR/Electricity - Frequency Regulators Jul 51
(Contd)

set of regulators in power systems has shown that they are very efficient and reliable and that the measuring element is very stable. Submitted 17 Jan 51.

199T15

MOSKALEV, A. G.

APPROVED FOR RELEASE: 07/12/2001 CIA-RDP86-00513R001135320017-8"

"APPROVED FOR RELEASE: 07/12/2001 CIA-RDP86-00513R001135320017-8

MOSKALEV, A. G.

PHASE I TREASURE ISLAND BIBLIOGRAPHICAL REPORT AID 462 - 1

BOOK

Author: MOSKALEV, A. G. Call No.: TK2851.M6

Full Title: AUTOMATIC FREQUENCY CONTROL IN INTERCONNECTED POWER SYSTEMS

Transliterated Title: Avtomaticheskoye regulirovaniye chastoty v energosistemakh

PUBLISHING DATA

Originating Agency: None

Publishing House: State Power Engineering Publishing House

Date: 1952 No. pp.: 175 No. of copies: 5,000

Editorial Staff: None

TEXT DATA

Coverage: The book describes problems of automatic frequency control in interconnected power systems: the influence of frequency fluctuations upon the performance of the power system, principles of selection of generating units and stations for frequency regulation, characteristics of separate elements of frequency regulators, and stability of the process of control. Three original Soviet designs of frequency regulators used in power systems are described. The importance of automatic control for large hydropower developments is emphasized by the author. Kuybyshev, Stalingrad, Tsimlyanskaya and several other large hydroelectric power plants already operating or under construction,

1/5

APPROVED FOR RELEASE: 07/12/2001 CIA-RDP86-00513R001135320017-8"

"APPROVED FOR RELEASE: 07/12/2001 CIA-RDP86-00513R001135320017-8

form the great interconnected power system of the European part of the USSR. The automation of production processes and automatic control and regulation make that rapid development possible.

The book contains many diagrams and graphs.

Table of Contents

		PAGES
Ch. I	Effect of frequency changes upon the economy of performance of power systems: effect upon the power station's performance, upon the productivity of consumers of power, upon active and reactive load, upon losses in the transmission networks, upon the distribution of loads among various stations and units of the system, and upon the readings of electric energy meters.	11-18
Ch. II	Economic factors for the selection of types of units and stations for frequency control: principles of selection of units and stations, selection of boilers, and of turbines for changing loads.	19-29
Ch. III	Technical factors for the selection of units and stations for frequency control: selection of boilers, turbines and stations.	29-33

APPROVED FOR RELEASE: 07/12/2001 CIA-RDP86-00513R001135320017-8"

"APPROVED FOR RELEASE: 07/12/2001 CIA-RDP86-00513R001135320017-8

Avtomaticheskoye regulirovaniye chastoty v energosistemakh

AID 462 - I

		PAGES
Ch. IV	Methods of frequency control in power systems: method of steady-state characteristics, of non-steady-state characteristic, of the leading generator, of imaginary statism, of quasi-steady state characteristics, of synchronous time, of combined time-and-frequency control, of simultaneous control with steady state and non-steady state characteristics, of interlocking capacities, of the standard-frequency system, and of internal steady-state characteristics.	33-53
Ch. V	Fundamentals of control-system dynamics: general information on control systems and stability of the dynamic process; control circuits; stability criteria: Hurwitz, A. V. Mikhaylov and Nyquist-Mikhaylov. Methods of securing stability of the process of regulation.	54-75
Ch. VI	Turbine speed-governors (for steam turbines and water wheels)	75-86
Ch. VII	Problems and characteristics of frequency control: limits of regulation, precision of adjustment and static error, regulating capacity by various methods.	

3/5

APPROVED FOR RELEASE: 07/12/2001 CIA-RDP86-00513R001135320017-8"

"APPROVED FOR RELEASE: 07/12/2001 CIA-RDP86-00513R001135320017-8

AID 462 - I

Avtomaticheskoye regulirovaniye chastoty v energosistemakh

		PAGES
	admissible speed of load changes, securing stability of the regulation process, reliability of operation, principles of construction.	86-94
Ch. VIII	Measuring elements of frequency regulators: required characteristics; measuring elements with RL or RC circuits, with parallel RC and RL circuits of with CRL and R circuits; differential phase-sensitive diagram including a CRL circuit; measuring elements: with a frequency bridge or with a frequency filter.	94-114
Ch. IX	Amplifying elements: relay, electronic, ionic, magnetic amplifiers; amplidynes.	115-122
Ch. X	Frequency regulator of P. P. Ostroy	122-130
Ch. XI	Frequency regulator of the Office for the Organization and Rationalization of Regional Electric Power Plants and Networks (ORGRES) and of the Ministry of the Electrical Industry (MEI).	130-137
Ch. XII	Frequency regulator with a magnetic filter of the Ministry of Electric Power Stations.	137-152
Ch. XIII	Stability of frequency control in electric power systems: block diagrams of frequency control in	

4/5

APPROVED FOR RELEASE: 07/12/2001 CIA-RDP86-00513R001135320017-8"

"APPROVED FOR RELEASE: 07/12/2001 CIA-RDP86-00513R001135320017-8

AID 462 - I

Avtomaticheskoye regulirovaniye chastoty v energosistemakh

PAGES

power systems, characteristic equations for separate circuits of the control system; circuit analysis according to Mikhaylov and Nyquist-Mikhaylov criteria; stability analysis of the regulatory process with a MFRCh-201 type regulator; influence of types of turbines, and speed and load governors upon the stability of the frequency regulation process. 152-166

Ch. XIV Methods of determining the characteristics of certain circuits of regulatory systems. 167-170

Appendix: Dynamic characteristics of some generators, turbines and water wheels of Soviet production. 171-172

Purpose: The book is written for engineers and technicians working in the field of automatic control in general, and load and frequency control in interconnected power systems in particular.

Facilities: Names of Russian scientists and engineers, specialists in the field of automatic control, appear in the text.

No. of References: Total 58, all Russian (1, 1877; 9, 1934-1939; and 48, 1940-1951).

Available: Library of Congress.

5/5

APPROVED FOR RELEASE: 07/12/2001 CIA-RDP86-00513R001135320017-8"

"APPROVED FOR RELEASE: 07/12/2001 CIA-RDP86-00513R001135320017-8

MOSKALEV, A. G.

232T52

USSR/Electricity - Power Systems
Frequency Stability

Sep 52

"Frequency Characteristics of Electric Power Systems," A. G. Moskalev, Cand Tech Sci, TsNIEL, Min of Elec Power Stations

"Elektrichestvo" No 9, pp 35-40

Results of a study of steady-state and transient frequency fluctuations in a power system when the power balance is disturbed. Gives an eq for the dynamics of the turbogenerator unit, which eq greatly simplifies the study and calcn of transients. Submitted 15 Mar 52.

232T52

APPROVED FOR RELEASE: 07/12/2001 CIA-RDP86-00513R001135320017-8"

"APPROVED FOR RELEASE: 07/12/2001 CIA-RDP86-00513R001135320017-8

1. SOLOV'YEV, I. I., PROF., [illegible]YLIDSON, E. D., ENG., KRIKUNCHIK, A. B., ENG., KHOMUTOV, B. A., ENG., MOSKALEV, A. G., ENG., POPOV, I. N., ENG., TSAREV, M. I., ENG.

2. USSR (600)

4. Electric Circuits

7. Remarks to Ye. L. Sirotinskiy's article "Symbols and rules for drawin schemes of relay protection and automaticity." Eletrichestvo no. 11, 1952.

9. Monthly List of Russian Accessions, Library of Congress, February 1953. Unclassified.

APPROVED FOR RELEASE: 07/12/2001 CIA-RDP86-00513R001135320017-8"

"APPROVED FOR RELEASE: 07/12/2001 CIA-RDP86-00513R001135320017-8

MOSKALEV, A.G.

"The measuring elements of frequency regulators, A. G. Moskalev, Central Sci-Res Electric Eng Lab, Ministry of Electric Power Stations

Avtomat i Telemekh, Vol 13, No 5, pp 544-560

An analysis of various types of measuring elements for frequency regulators, e.g., RL circuits, RC circuits, RLC and R circuits, frequency bridges (used in Leeds and Northrup regulators), etc. This analysis was performed in connection with the development of a frequency regulator at the authors's inst. The latter regulator makes use of a differential circuit consisting of an input transformer and solid rectifier bridges with the output of a frequency filter connected to the mid-point of the two rectifier bridges. Submitted 10 May 1950

APPROVED FOR RELEASE: 07/12/2001 CIA-RDP86-00513R001135320017-8"

"APPROVED FOR RELEASE: 07/12/2001 CIA-RDP86-00513R001135320017-8

MOSKALEV, A.G.

[How to read an electric installation diagram] Kak chitat' elektricheskie skhemy. Moskva, Gos.energ.izd-vo, 1953. 86 p. (MLRA 6:7)
(Electric wiring--Diagrams)

APPROVED FOR RELEASE: 07/12/2001 CIA-RDP86-00513R001135320017-8"

"APPROVED FOR RELEASE: 07/12/2001 CIA-RDP86-00513R001135320017-8

MOSKALEV, A. G.

Electrical Engineering Abstracts
May 1954
Measurements

Cand Tech Sci

TsNIEL MESEP

(1) Elec

1993. Frequency recording for the determination of dynamic frequency characteristics of power systems. A. G. MOSKALEV. *Elektrichestvo*, 1953, *No.* 8, 14–15. *In Russian.*

The dynamic frequency characteristics of power systems are important for the design, adjustment and operation of frequency regulators, synchronizing gear for the generators, frequency-controlled load-shedding devices and other automatic equipment of modern power stations. The conventional types of frequency recorders are far too crude and fail to record important details of the frequency variations. The circuit described is a rectifying differential circuit with frequency filters converting the frequency variations into voltage variations which are then recorded by a c.r.o. Frequency differences down to 0·01 c/s may be recorded.

D. T. KRAUS

APPROVED FOR RELEASE: 07/12/2001 CIA-RDP86-00513R001135320017-8"

"APPROVED FOR RELEASE: 07/12/2001 CIA-RDP86-00513R001135320017-8

MOSKALEV, Aleksandr Gerasimovich, kandidat tekhnicheskikh nauk; DEMIKOV, Ye.D., redaktor; VORONIN, K.P., tekhnicheskiy reduktor

[How to read diagrams for electric wiring] Kak chitat' elektricheskie skhemy. Izd. 2-oe, perer. Moskva, Gos. energ. izd-vo, 1957. 87 p. (MIRA 10:3)
(Electric wiring--Diagrams)
(Electric engineering--Notation)

APPROVED FOR RELEASE: 07/12/2001 CIA-RDP86-00513R001135320017-8"

"APPROVED FOR RELEASE: 07/12/2001 CIA-RDP86-00513R001135320017-8

8(6) SOV/112-58-3-3890

Translation from: Referativnyy zhurnal. Elektrotekhnika, 1958, Nr 3, pp 55-56 (USSR)

AUTHOR: Moskalev, A. G.

TITLE: On the Problem of an Automatic Frequency Control Effected by a Multiunit Power Station (K voprosu avtomaticheskogo regulirovaniya chastoty mnogoagregatnoy stantsiyey)

PERIODICAL: Tr. Vses. zaochn. energ. in-ta, 1957, Nr 7, pp 183-196

ABSTRACT: Well-known practical methods of automatic frequency control by the active-load distribution among generators are presented.

Card 1/1

APPROVED FOR RELEASE: 07/12/2001 CIA-RDP86-00513R001135320017-8"

"APPROVED FOR RELEASE: 07/12/2001 CIA-RDP86-00513R001135320017-8

MOSKALEV, A.G. , dotsent, kand.tekhn.nauk

Integrated automatic-control system for thermal electric power plants. Trudy VZEI no.9:26-40 '58. (MIRA 12:10)
(Electric power plants) (Automatic control)

APPROVED FOR RELEASE: 07/12/2001 CIA-RDP86-00513R001135320017-8"

"APPROVED FOR RELEASE: 07/12/2001 CIA-RDP86-00513R001135320017-8

MOSKALEV, A.G., dotsent, kand.tekhn.nauk

Automatic control of the excitation, voltage, and reactive-power output. Trudy VZEI no.9:41-55 '58. (MIRA 12:10)
(Electric generators) (Automatic control)

APPROVED FOR RELEASE: 07/12/2001 CIA-RDP86-00513R001135320017-8"

"APPROVED FOR RELEASE: 07/12/2001 CIA-RDP86-00513R001135320017-8

8(3)14(6)28(1) PHASE I BOOK EXPLOITATION SOV/2231

Moskalev, Aleksandr Gerasimovich

Avtomaticheskaya chastotnaya razgruzka energeticheskikh sistem (Automatic Frequency-Controlled Unloading of Power Systems) Moscow, Gosenergoizdat, 1959. 159 p. 6,800 copies printed.

Ed.: N.A. Mel'nikov,; Tech. Ed.: G.I. Matveyev.

PURPOSE: This book is intended for engineering personnel of power systems and design organizations. It may also be used as a reference book by scientific workers and students of power- and electrical-engineering departments of vuzes. It is also recommended as a textbook for engineers, members of the advanced-study department of the All-Union Correspondence Power Institute.

COVERAGE: The author studies problems of power unbalance occurring in a power system and discusses the automatic disconnection of loads during unbalance. He also discusses the static frequency characteristics of load equipment, turbogenerators, and the power system in general and presents the dynamic

Card 1/7

APPROVED FOR RELEASE: 07/12/2001 CIA-RDP86-00513R001135320017-8"

"APPROVED FOR RELEASE: 07/12/2001 CIA-RDP86-00513R001135320017-8

PHASE I BOOK EXPLOITATION SOV/3870

Moskalev, Aleksandr Gerasimovich

Avtomaticheskoye regulirovaniye rezhima energeticheskoy sistemy po chastote i aktivnoy moshchnosti (Automatic Control of Power System Operating Conditions Based on Frequency and Active Power) Moscow, Gosenergoizdat, 1960. 239 p. Errata slip inserted. 8,000 copies printed.

Ed.: N.A. Mel'nikov; Tech. Ed.: G.Ye. Larionov.

PURPOSE: This monograph is intended for technicians and scientists engaged in designing and developing automatic controls of the operating conditions of electric power plants and systems. It can also be used by aspirants desiring to improve their knowledge in this field, and is recommended as a textbook for students of the Department of Graduate Engineers' Advanced Training in the All-Union Correspondence Institute of Power Engineering.

COVERAGE: The book examines the following problems: effect of frequency change on the operating efficiency of power systems and on the consumption of electric energy, most efficient distribution

Card ~~1/11~~

APPROVED FOR RELEASE: 07/12/2001 CIA-RDP86-00513R001135320017-8"

"APPROVED FOR RELEASE: 07/12/2001 CIA-RDP86-00513R001135320017-8

MOSKALEV, A.G.

PHASE I BOOK EXPLOITATION SOV/[illegible]

Konferentsiya po voprosam teorii i primeneniya diskretnykh avtomaticheskikh sistem, Moscow, 1958

Teoriya i primeneniye diskretnykh avtomaticheskikh sistem; trudy konferentsii (Theory and Application of Discrete Automatic Systems; Transactions of the Conference) Moscow, AN SSSR, 1960. 574 p. 5,000 copies printed.

Sponsoring Agency: Akademiya nauk SSSR. Natsional'nyy komitet SSSR po avtomaticheskomu upravleniyu. Institut avtomatiki i telemekhaniki.

Editorial Board: M.A. Gavrilov, Doctor of Technical Sciences, Yu.V. Dolgolenko, Doctor of Technical Sciences, V.A. Kotel'nikov, Candidate of Technical Sciences, A.Ya. Lerner, Doctor of Technical Sciences, I.S. Morosanov (Scientific Secretary), G.S. Pospelov, Doctor of Technical Sciences, A.A. Fel'dbaum, Doctor of Technical Sciences, A.V. Khremov, Candidate of Technical Sciences, and Ya.Z. Tsypkin, Doctor of Technical Sciences; Resp. Ed.: Ya.Z. Tsypkin, Doctor of Technical Sciences; Ed. of Publishing House: M.L. Podgoretskiy; Tech. Ed.: S.G. Markovich.

PURPOSE: These transactions are intended for the members of the conference and other specialists in automatic control.

COVERAGE: The Conference on the Problems of Theory and Application of Discrete Automatic Systems took place in Moscow from September 22 to 26, 1958. It was the First Conference devoted to discussions of the present status of the theory and techniques of discrete automatic systems and to planning for future development. The papers discussed at the conference have been divided into four groups. In the first group optimization switching circuits are discussed as well as methods of relay control systems, in particular plant lag control systems in which are realized optimal processes as to quick response. The second group of papers is devoted to the analysis and synthesis of pulse systems with variable parameters, of pulse systems with several pulse components, to the study of self-oscillation phenomena in nonlinear pulse systems and to the methods of calculating linear pulse systems. Problems of simulating pulse systems and descriptions of some pulse regulators have also been included. The third group of papers deals with digital systems. Problems of using elements of digital technique and digital computers for the automation of various fields of engineering, i.e., power engineering, mining, radio communication, metallurgy, etc., are discussed. Problems of analog-digital conversion and vice versa as well as problems of developing specialized functional converters have been included in this group. The fourth group of papers includes theoretical elements and certain practical applications of the simplest types of self-adjusting systems, optimalizing control systems, which are developed as relay, pulse and digital devices. Here are also found papers describing various methods of investigating steady state conditions in optimalizing systems, results of studying the effects of random factors on the process of automatic scanning, and examples of adjusting optimalizing control systems. Some of the more interesting communications and observations made during the discussion of the various conference papers have also been included in the Transactions. Personalities and references accompany most of the papers.

III. DIGITAL SYSTEMS

Moskalev, A.G. (Moscow). Possibility of Applying Discrete Devices For Automatic Frequency and Active-Power Regulation of Operating Conditions in a Power System 247

The author enumerates several factors which influence the economical operation of electric power systems. He gives examples of several areas of application of digital computers in power systems for taking these factors into consideration either on a continuous or a periodical basis. There are no references.

Kryzhanovskiy, O.M., and M.Yu. Beyderman (Kiyev). Use of Discrete Counting Components in Systems of Automatic Control of Multirope Shaft Hoisting Equipment 257

Multirope hoists are widely used in the Soviet mining industry. For dependable operation in deep shafts, the hoists have to be equipped with depth indicators and a measuring pulse-type component of the regulating system. There are 11 references, all Soviet.

Khlytchiyev, S.M., and G.A. Aleksandrov (Moscow). Prospects of Applying Electronic Control Machines in the Automation of Receiving Rediffusion Stations 267

The author describes the organization and operation of receiving rediffusion stations in the Soviet Union and explains the principles of their automation. There are 6 references: 5 Soviet and 1 English.

APPROVED FOR RELEASE: 07/12/2001 CIA-RDP86-00513R001135320017-8"

"APPROVED FOR RELEASE: 07/12/2001 CIA-RDP86-00513R001135320017-8

MOSKALEV, A. G. GORNSHTEYN, V. M.

"Method of Optimum Load Distribution Among the Power Plants of an Electric System"

report presented at: The Madrid, Spain Sectional Meeting of World Power Conference, 5-9 June 1960.

APPROVED FOR RELEASE: 07/12/2001 CIA-RDP86-00513R001135320017-8"

"APPROVED FOR RELEASE: 07/12/2001 CIA-RDP86-00513R001135320017-8

MOSKALEV, A.G., kand.tekhn.nauk, dotsent

Self-aligning decentralized automatic control system for the regulation of an electric power system using frequency and active power. Elektrichestvo no.10:1-7 O '60. (MIRA 14:9)

1. Vsesoyuznyy nauchno-issledovatel'skiy institut elektroenergetiki.

(Electric power distribution) (Automatic control)

APPROVED FOR RELEASE: 07/12/2001 CIA-RDP86-00513R001135320017-8"

"APPROVED FOR RELEASE: 07/12/2001 CIA-RDP86-00513R001135320017-8

MOSKALEV, A.G., kand.tekhn.nauk (Moskva)

A method for calculating economic load distribution in a power system and the settings of the automatic frequency and real power control system using serially manufactured analog computers. (MIRA 15:7)
Elektrichestvo no.8:45-51 Ag '62.
(Electric power distribution)
(Electronic analog computers)

APPROVED FOR RELEASE: 07/12/2001 CIA-RDP86-00513R001135320017-8"

"APPROVED FOR RELEASE: 07/12/2001 CIA-RDP86-00513R001135320017-8

MOSKALEV, A.G., kand.tekhn.nauk, dotsent; ZEYLIDZON, Ye.D., inzh.; KUCHKIN, M.D., inzh.

Automatic control of the performance of large consolidated electric power systems according to their frequency and real power. (MIRA 16:10)
Elektrichestvo no.9:81-87 S '63.

APPROVED FOR RELEASE: 07/12/2001 CIA-RDP86-00513R001135320017-8"

"APPROVED FOR RELEASE: 07/12/2001 CIA-RDP86-00513R001135320017-8

MOSKALEV, A.G., kand. tekhn. nauk, dotsent (Moskva)

Theoretical principles of optimum economic distribution of active and reactive loads in an automated electric power system. (MIRA 17:1)
Elektrichestvo no.12:24-33 D '63.

APPROVED FOR RELEASE: 07/12/2001 CIA-RDP86-00513R001135320017-8"

"APPROVED FOR RELEASE: 07/12/2001 CIA-RDP86-00513R001135320017-8

S/103/61/022/002/008/015
B019/B060

9.2530 (also 1031)

AUTHORS: Lipman, R. A., Moskalev, A. I. (Moscow)

TITLE: Magnetic amplifier with self-excitation according to a voltage doubler circuit

PERIODICAL: Avtomatika i telemekhanika, v. 22, no. 2, 1961, 224-230

TEXT: A study has been made of a hitherto rather neglected circuit of a magnetic amplifier (for which see Fig. 1), by starting from the diagrams of the circuit variables (Fig. 2) during one period of the feed voltage, and from the dependence $U_H = U_H(\Delta B_y)$ under the following conditions: 1) The feed voltage is sinusoidal. 2) The discharge time constant of the capacities $C_1 = C_2 = C$ is considerably larger than the period of the feed voltage: $R_H C \gg 1/f$, where f is the frequency of the feed voltage. 3) The loading time constant of the capacities C_1 and C_2 in saturated impedance coils is considerably smaller than the period of the saturation voltage: $r_p C \ll 1/f$. Under these premises the following relations are obtained:

Card 1/5

APPROVED FOR RELEASE: 07/12/2001 CIA-RDP86-00513R001135320017-8"

"APPROVED FOR RELEASE: 07/12/2001 CIA-RDP86-00513R001135320017-8

$$\Delta B_y/\Delta B_m = -\cos\theta_s - (\theta_s - \pi/2)\sin\theta_s \quad (14)$$

$$U_H/E_m = 2\sin\theta_s \quad (16)$$

where $\Delta B_m = 2B_m = 2E_m/\omega w_p S_c$ and E_m is the amplitude of the feed voltage. These expressions allow determining the voltage at the load as a function of induction changes in the core. Fig. 3 shows θ_s and U_H as functions of ΔB_y, calculated with the aid of (14) and (16) for the two circuits presented in Fig. 1. It further follows that the diagram examined here permits increasing the transconductance considerably as compared with the usual bridge circuit (by the 2.5-fold) and extending the working range of the characteristic of the amplifier in the case of unvaried impedance coil parameters and unvaried feed voltage. The drawbacks of these circuits are the higher sensitivity toward the forms of voltage and the amount of the internal resistance of the current feed. The smallest possible inner resistance is required in order to ensure the full benefit of the

APPROVED FOR RELEASE: 07/12/2001 CIA-RDP86-00513R001135320017-8"

"APPROVED FOR RELEASE: 07/12/2001 CIA-RDP86-00513R001135320017-8

S/103/61/022/002/008/015
B019/B060

advantages offered by this circuit. Such a circuit is best suited to serve as an operational magnetic amplifier. There are 6 figures and 2 non-Soviet-bloc references.

SUBMITTED: June 18, 1960

Legend to Fig. 1: Magnetic amplifier with self-excitation and d-c output. 1a) bridge circuit, 1б) doubler circuit.

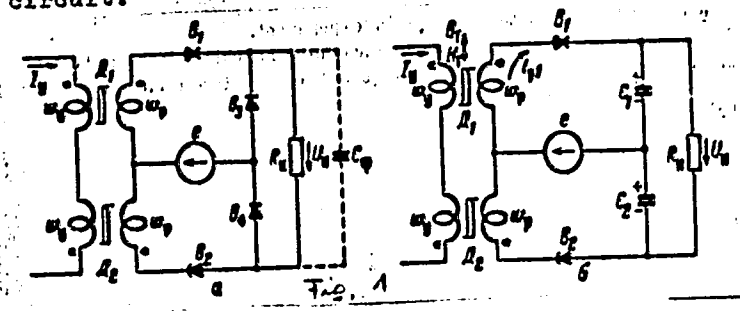

Fig. 1

APPROVED FOR RELEASE: 07/12/2001 CIA-RDP86-00513R001135320017-8"

"APPROVED FOR RELEASE: 07/12/2001 CIA-RDP86-00513R001135320017-8

89177

S/103/61/022/002/008/015
B019/B060

Magnetic amplifier with ...

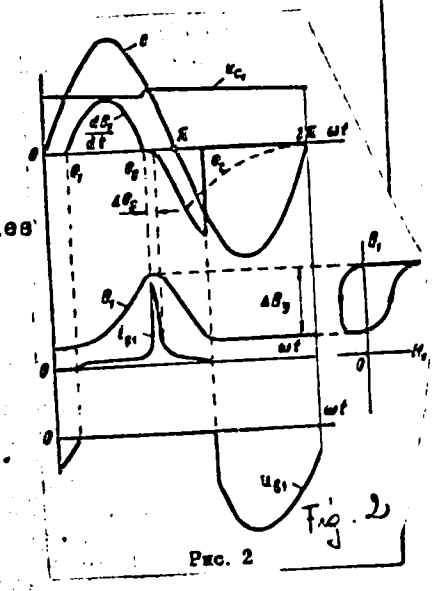

Legend to Fig. 2: representation of the variables of the circuit shown in Fig. 1б during one period of the feed voltage.

Fig. 2

Рис. 2

Card 4/5

APPROVED FOR RELEASE: 07/12/2001 CIA-RDP86-00513R001135320017-8"

"APPROVED FOR RELEASE: 07/12/2001 CIA-RDP86-00513R001135320017-8

Magnetic amplifier with ...

S/103/61/022/002/008/015
B019/B060

Legend to Fig. 3: dependence of the relative change of the output voltages (full lines) and the saturation angles of the circuits shown in Fig. 1a (Curves 1) and in Fig. 1б (Curves 2).

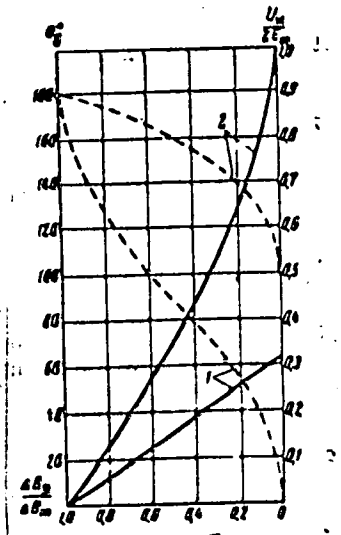

Fig. 3

Card 5/5

APPROVED FOR RELEASE: 07/12/2001 CIA-RDP86-00513R001135320017-8"

"APPROVED FOR RELEASE: 07/12/2001 CIA-RDP86-00513R001135320017-8

ACCESSION NR: AT4036420 S/0000/63/000/000/0313/0320

AUTHOR: Moskalev, A. I.

TITLE: A high-stability D. C. magnetic amplifier

SOURCE: Vsesoyuznoye soveshchaniye po ferritam i po beskontaktny*m magnitny*m elementam avtomatiki. 3d, Minsk. Ferrity* i beskontaktny*ye elementy* (Ferrites and noncontact elements); doklady* soveshchaniya. Minsk, Izd-vo AN BSSR, 1963, 313-320

TOPIC TAGS: amplifier, magnetic amplifier, direct current amplifier, amplifier stability, single core magnetic amplifier, automation, control system

ABSTRACT: The author describes a two-cycle single-core direct-current magnetic amplifier, designed to perfect existing magnetic amplifiers whose zero points are susceptible to external influences (temperature, voltage etc.). The circuit of the amplifier (see the Enclosure) consists of a pulse voltage feeder, an amplifying choke with operating and control coils, an amplitude discriminator, a load resistance and a capacitance. Amplifiers, assembled on this pattern, involve no factors causing the zero-point instability which is characteristic of the existing amplifiers, i.e., unequal changes in the parameters of different cores with temperature and voltage. An extensive theoretical treatment of a

Card 1/3

APPROVED FOR RELEASE: 07/12/2001 CIA-RDP86-00513R001135320017-8"

"APPROVED FOR RELEASE: 07/12/2001 CIA-RDP86-00513R001135320017-8

ACCESSION NR: AT4035420

variety of operating conditions is given, such as the choice of a proper feed-pulse volt-second integral, the core magnetic saturation and the process of reverse magnetization. The perfected amplifier showed a zero-stability of the order of $1 : 10^{-13}$ v in a wide range of ambient temperature. Orig. art. has: 4 figures and 10 formulas.

ASSOCIATION: none

SUBMITTED: 04Dec63 DATE ACQ: 07May64 ENCL: 01

SUB CODE: EE, IE NO REF SOV: 000 OTHER: 000

Card 2/3

APPROVED FOR RELEASE: 07/12/2001 CIA-RDP86-00513R001135320017-8"

"APPROVED FOR RELEASE: 07/12/2001 CIA-RDP86-00513R001135320017-8

ACCESSION NR: AT4035420

ENCLOSURE: 01

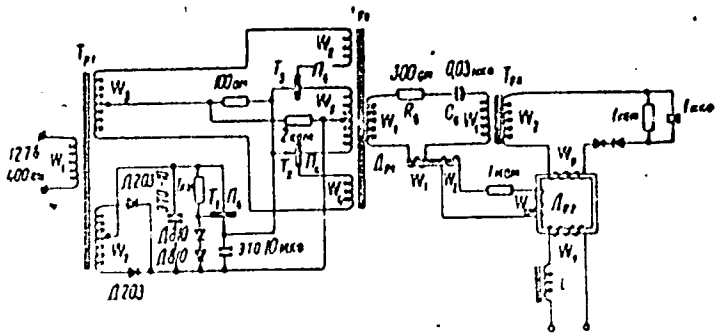

Fig. 1. Complete schematic diagram of a two-cycle D.C. magnetic amplifier with a single core. T_p = transformer; W = coil; Δ_p = choke coil.

Card 3/3

APPROVED FOR RELEASE: 07/12/2001 CIA-RDP86-00513R001135320017-8"

"APPROVED FOR RELEASE: 07/12/2001 CIA-RDP86-00513R001135320017-8

MOSKALEV, A.I.,(g. Sovetskaya gavan')

Spatula for carrying out of galvanocauterization of the palatal tonsils. Vest. oto-rin. 18 no.1:61 Ja-F '56. (MIRA 9:6)

(TONSILS) (SURGICAL INSTRUMENTS AND APPARATUS)

APPROVED FOR RELEASE: 07/12/2001 CIA-RDP86-00513R001135320017-8"

"APPROVED FOR RELEASE: 07/12/2001 CIA-RDP86-00513R001135320017-8

MOSKALEV, A.I.; SHVEEOV, N.I. (g.Nikolayev)

Use of diluted iodolipol for the X-ray study of the accessory sinuses of the nose. Zhur.ush., nos.i gorl.bol. 21 no.6:72 N-D '61. (MIRA 15:11)

(CONTRAST MEDIA) (NOSE, ACCESSORY SINUSES OF)

APPROVED FOR RELEASE: 07/12/2001 CIA-RDP86-00513R001135320017-8"

"APPROVED FOR RELEASE: 07/12/2001 CIA-RDP86-00513R001135320017-8

MOSKALEV, A. I.

"Serradella as a Forage and Leguminous Crop in the Belorussian SSR." Cand Agr Sci, Inst of Socialized Agriculture, Acad Sci Belorussian SSR, Minsk, 1954. (KL, No 3, Jan 55)

Survey of Scientific and Technical Dissertations Defended at USSR Higher Educational Institutions (13)
SO: Sum. No. 598, 29 Jul 55

APPROVED FOR RELEASE: 07/12/2001 CIA-RDP86-00513R001135320017-8"

"APPROVED FOR RELEASE: 07/12/2001 CIA-RDP86-00513R001135320017-8

MOSKALEV, A. I.

USSR/Cultivated Plants - Fodders. L-4

Abs Jour : Ref Zhur - Biologiya, No 16, 25 Aug 1957, 69276

Author : Moskalev, A.I.
Inst :
Title : Seradella in Byelorussian SSR.

Orig Pub : Zemledelie, 1957, No 2, 85-86

Abstract : Experiments were conducted in the experimental station of the Institute of Socialist Agriculture in 1951 to 1953 on growing of seradella for green mass. The crop of the pure unmixed plant are low due to its wilting and choking. In mixtures with supporting plants (oats, annual ryegrass) the crops are considerably larger. The best results (up to 42.6 centners/hectare of hay) yield triple pelyushk-oat-seradella mixtures.

Card 1/1

APPROVED FOR RELEASE: 07/12/2001 CIA-RDP86-00513R001135320017-8"

"APPROVED FOR RELEASE: 07/12/2001 CIA-RDP86-00513R001135320017-8

MOSKALEV, A.I., kandidat sel'skokhozyaystvennykh nauk.

Serradella. Nauka i pered.op.v sel'khoz. 7 no.6:42-43 Je '57. (MIRA 10:7)

1. Grodnenskiy sel'skokhozyastvennyy institut, Belorusskaya SSR.
(Serradella)

APPROVED FOR RELEASE: 07/12/2001 CIA-RDP86-00513R001135320017-8"

"APPROVED FOR RELEASE: 07/12/2001 CIA-RDP86-00513R001135320017-8

STRELKOV, I.G., doktor sel'khoz. nauk, glav. red.; KOVALENKO, I.F., kand. sel'khoz. nauk, red.; SVIRITSKIY, Ya.N., kand. sel'khoz. nauk, red.; MIKHALEV, Ya.K., kand. sel'khoz. nauk, red.; MOSKALEV, A.I., kand. sel'khoz. nauk; LAKIN, V.D., red.; ZEN'KO, M.M., tekhn. red.

[Pulse crops] Zernobobovye kul'tury. Minsk, Gos.izd-vo sel'skokhoz. lit-ry BSSR, 1963. 246 p. (MIRA 17:1)

1. White Russia. Ministerstvo sel'skogo khozyaystva.
(White Russia--Legumes)

APPROVED FOR RELEASE: 07/12/2001 CIA-RDP86-00513R001135320017-8"

"APPROVED FOR RELEASE: 07/12/2001 CIA-RDP86-00513R001135320017-8

Pf-4/Pi-4/Peb GS

...T(d)/EWT(1)/EWP(v)/EWP(k)/EWP(h)/EWA(h)/EWP(1)

UR/0000/64/000/000/0021/0027

ACCESSION NR: AT5011599

AUTHOR: Fatyushin, V. A., Moskalev, A. I.

TITLE: Development of operational magnetic amplifiers

SOURCE: Vsesoyuznoye soveshchaniye po magnitnym elementam avtomatiki, telemekhaniki, izmeritel'noy i vychislitel'noy tekhniki. Lvov, 1962. Magnitnyye elementy avtomatiki, telemekhaniki, izmeritel'noy i vychislitel'noy tekhniki (Magnetic elements of automatic control, remote control, measurement and computer engineering); trudy soveshchaniya. Kiev, Naukova dumka, 1964, 21-27

TOPIC TAGS: magnetic amplifier, magnetic amplifier design, amplifier drift, amplifier gain, magnetic control system, magnetic core, silicon rectifier

ABSTRACT: Various systems of automatic control and electronic computers which do not require too fast a response make extensive use of operational magnetic amplifiers. Several specialized circuits result in highly stable amplifiers with a sensitivity threshold of 10^{-14}V or lower. However, such highly stable circuits have an amplification factor lower than standard amplifiers, exhibit quite large inertia, and require specially stabilized power supplies. While multistage magnetic amplifiers help increase the amplification factor (F. I. Kerbnikov,

Card 1/3

APPROVED FOR RELEASE: 07/12/2001 CIA-RDP86-00513R001135320017-8"

"APPROVED FOR RELEASE: 07/12/2001 CIA-RDP86-00513R001135320017-8

L 44289-65

ACCESSION NR: AT5011599

M. A. Rozenblat, Magnitnyye elementy avtomatiki, telemekhaniki, izmeritel'noy i vychislitel'noy tekhniki; trudy soveshchaniya, Kiev, Naukova dumka, 1964, 16-20). It is practically impossible to design a multistage (larger than two) magnetic amplifier circuit with a sufficiently deep feedback. Consequently, the authors discuss the feasibility of satisfactory operational magnetic amplifier design based on ordinary circuits of magnetic DC amplifiers (MDCA) with self-magnetization. An improvement of the zero point stability together with increases in amplification factors may be achieved by utilizing thermally stable magnetic materials and high-quality silicon rectifiers, and choosing optimum magnetic core geometries. While earlier researchers searched for optimum core geometries from the standpoint of minimum size and weight for given heating conditions (see, e.g., M. A. Rozenblat, Avtomatika i telemekhanika, 1958, no. 8), the emphasis is now on an amplifier size which will yield a minimum sensitivity threshold and maximum amplification. The study covers magnetic amplifiers earmarked for operation with low-internal-resistance recording devices, amplifiers for operation with high-internal-resistance devices, and methods for increasing the slope of the input-output characteristic, and presents the results of experimental investigations in these areas. Orig. art. has: 4 formulas, 3 figures, and 3 tables.

Card 2/3

APPROVED FOR RELEASE: 07/12/2001 CIA-RDP86-00513R001135320017-8"

"APPROVED FOR RELEASE: 07/12/2001 CIA-RDP86-00513R001135320017-8

L 44289-65

ACCESSION NR: AT5011599

ASSOCIATION: None

SUBMITTED: 29Sep64 ENCL: 00 SUB CODE: IE,EC

NO REF SOV: 008 OTHER: 001

Card 3/3

APPROVED FOR RELEASE: 07/12/2001 CIA-RDP86-00513R001135320017-8"

"APPROVED FOR RELEASE: 07/12/2001 CIA-RDP86-00513R001135320017-8

MOSKALEV, Andrey Ivanovich; NOVIK, A.Z., nauchn. red.; STEPANSKAYA, I.M., tekhn. red.

[Training adjusters of automatic machine-tool lines] Podgotovka naladchikov avtomaticheskikh linii stankov. Moskva, Proftekhizdat, 1962. 41 p. (MIRA 17:2)

APPROVED FOR RELEASE: 07/12/2001 CIA-RDP86-00513R001135320017-8"

"APPROVED FOR RELEASE: 07/12/2001 CIA-RDP86-00513R001135320017-8

MOSKALEV, A.Kh., gornorabochiy

Active voluntary-inspection worker. Bezop.truda v prom., no.12: 30-31 D '61. (MIRA 15:1)

1. Shakhta No.30 kombinata Vorkutugol'.
(Vorkuta--Mine inspection)

APPROVED FOR RELEASE: 07/12/2001 CIA-RDP86-00513R001135320017-8"

"APPROVED FOR RELEASE: 07/12/2001 CIA-RDP86-00513R001135320017-8

76985
SOV/56-37-6-25/55

16.8300, 16.7500

AUTHORS: Dolginov, A. Z., Moskalev, A. N.

TITLE: Relativistic Spherical Functions. III

PERIODICAL: Zhurnal eksperimental'noy i teoreticheskoy fiziki, 1959, Vol 37, Nr 6, pp 1697-1707 (USSR)

ABSTRACT: Equations for the wave function of a particle were expanded over irreducible representations of the Lorentz group. This yielded a relativistically invariant classification of the states. The connection between the various modes of realization of the irreducible representations was established. The form of operators H_μ and F_μ corresponding to the Lorentz group was obtained from the relation:

Card 1/4

APPROVED FOR RELEASE: 07/12/2001 CIA-RDP86-00513R001135320017-8"

"APPROVED FOR RELEASE: 07/12/2001 CIA-RDP86-00513R001135320017-8

Relativistic Spherical Functions. III

76985
SOV/56-37-6-25/55

$$H_{\pm 1} f = \pm \frac{1}{\sqrt{2}} e^{\pm i(\theta' - \theta)} \left\{ \pm \frac{\partial f}{\partial \vartheta} + \frac{i}{2} \operatorname{tg} \frac{\vartheta}{2} \frac{\partial f}{\partial \theta} + \frac{i}{2} \operatorname{ctg} \frac{\vartheta}{2} \frac{\partial f}{\partial \theta'} \right\}.$$

$$H_0 f = \frac{i}{2} \left\{ \frac{\partial f}{\partial \theta} - \frac{\partial f}{\partial \theta'} \right\}. \tag{10}$$

$$F_{\pm 1} f = \pm \frac{1}{\sqrt{2}} e^{\pm i(\theta' - \theta)} \left\{ (i + n) \sin \vartheta f - i \cos \vartheta \frac{\partial f}{\partial \vartheta} \mp \frac{1}{2} \operatorname{tg} \frac{\vartheta}{2} \frac{\partial f}{\partial \theta} \pm \frac{1}{2} \operatorname{ctg} \frac{\vartheta}{2} \frac{\partial f}{\partial \theta'} \right\}.$$

$$F_0 f = (i + n) \cos \vartheta f + i \sin \vartheta \, \partial f / \partial \vartheta.$$

(cf. M. A. Naymark, Uspekhi mat. nauk, 9, 19, 1954). To obtain the expansion of wave function $\Psi_\sigma(\mathbf{p})$ according to the irreducible concept, the function $f(\mathbf{p})$ must be taken in the form:

$$f(\omega) = \sum_{lm} \int_0^\infty dn a_{lm}(n) \Psi_{nlm}(\omega).$$

With the aid of previously derived equations in Parts I and II of this series of investigations (A. Z. Dolginov, Zhur. eksp. i teoret. fiz., 30, 746, 1956;

Card 2/4

APPROVED FOR RELEASE: 07/12/2001 CIA-RDP86-00513R001135320017-8"

"APPROVED FOR RELEASE: 07/12/2001 CIA-RDP86-00513R001135320017-8

Relativistic Spherical Functions. III

76985
SOV/56-37-6-25/55

A. Z. Dolginov and I. N. Toptygin, ibid., 37, 11, 1959), the following relation was derived:

$$u^{s0}_{\sigma 0}(\eta, \lambda) \Psi_{nlm}(\omega) = \sum_{k_0 j} (-)^{j-l-k_0} (2J + 2k_0 + 1) [(2l + 1)/(2s + 1)(2J + 1)]^{1/2} \times \times C^{l\mu}_{lms\lambda} W(JJsj;\ lJ + k_0)\, T^{nk_0}_{j\mu s\sigma}(\eta), \tag{48}$$

where

$$\eta \equiv (\omega,\ \Omega_2) \equiv (\Omega_1,\ \alpha,\ \Omega_2) \tag{49}$$

$$T^{nk_0}_{j\mu s\sigma}(\eta) = \sum_{\varkappa} D^{j}_{\mu\varkappa}(\Omega_1)\, D^{s}_{\varkappa\sigma}(\Omega_2)\, Q^{js}_{nk_0\varkappa}(\alpha),$$

and

$$Q^{js}_{nk_0\varkappa}(\alpha) = \sum_{f=|J-s|}^{J+s} (2f + 1)[(2j + 1)/(2J + 1)]^{1/2} W(JJ + k_0 fs;\ jJ) \times \times C^{s\varkappa}_{f0j\varkappa} e^{i\varkappa\alpha} \Pi_f(n,\ \alpha). \tag{50}$$

(here, σ is spin variable; λ is projection of the particle spin; angles $\Omega_2 \equiv (\varphi_2, \vartheta_2, \chi_2)$

Card 3/4

APPROVED FOR RELEASE: 07/12/2001 CIA-RDP86-00513R001135320017-8"

"APPROVED FOR RELEASE: 07/12/2001 CIA-RDP86-00513R001135320017-8

Relativistic Spherical Functions. III

76985
SOV/56-37-6-25/55

determine the direction of the particle spin in the system at rest with OZ||p; angles $\Omega_1 \equiv (\varphi_1, \vartheta_1, \chi_1)$ define the direction of the momentum p in the selected system of coordinates; th α = v/c). There are 14 references, 10 Soviet, 4 U.S. The U.S. references are: G. Racah, Phys. Rev., 62, 438, 1942; A. Arima, H. Horie, Y. Tanabe, Prog. Theor. Phys. 11, 143, 1954; H. Matsunobo, H. Takebe, Prog. Theor. Phys. 14, 589, 1955; H. Bateman, Higher Trans[illegible] Functions, N. Y., 1953.

ASSOCIATION: Leningrad Phys.-Tech. Inst., Acad. Sciences, USSR (Leningradskiy fiziko-tekhnicheskiy institut, Akademii nauk SSSR)

SUBMITTED: June 25, 1959

Card 4/4

APPROVED FOR RELEASE: 07/12/2001 CIA-RDP86-00513R001135320017-8"

"APPROVED FOR RELEASE: 07/12/2001 CIA-RDP86-00513R001135320017-8

MOSKALEV, A.N., kand. tekhn. nauk; FILATOV, N.V., kand. tekhn. nauk; FEDIN, I.A., inzh.; POPOV, V.M., inzh.; BURLO, Ye.A., inzh.

Tests in cutting high-alloyed steels without flux. Svar. proizv. no.9:26-27 S '65. (MIRA 18:9)

1. Dnepropetrovskiy filial im. AN UkrSSR (for Moskalev).
2. Sibirskiy metallurgicheskiy institut (for all except Moskalev).

APPROVED FOR RELEASE: 07/12/2001 CIA-RDP86-00513R001135320017-8"

"APPROVED FOR RELEASE: 07/12/2001 CIA-RDP86-00513R001135320017-8

IVANOV, V.N., kand.tekhn.nauk; MOSKALEV, A.N., inzh.

Research on the resistance to drilling and second crushing with jet torches of hard rocks from Gornaya Shoriya. Izv. vys. ucheb. zav.; gor.zhur. no.2:75-78 '61. (MIRA 14:3)

1. Sibirskiy metallurgicheskiy intitut (for Ivanov). 2. Vostochnyy nauchno-issledovatel'skiy gornorudnyy institut (for Moskalev). Rekomendovana kafedroy gornykh mashin i rudnichnogo transporta Sibirskogo metallurgicheskogo instituta.
(Rock drills)

APPROVED FOR RELEASE: 07/12/2001 CIA-RDP86-00513R001135320017-8"

"APPROVED FOR RELEASE: 07/12/2001 CIA-RDP86-00513R001135320017-8

MOSKALEV, A.N., inzh.

Use of a circulating-type cooling system for thermal drilling rigs. Izv.vys.ucheb.zav.; gor.zhur. no.3:93-96 '61. (MIRA 15:4)

1. Sibirskiy metallurgicheskiy institut imeni S.Ordzhonikidze. Rekomendovana kafedroy gornykh mashin i rudnichnogo transporta Sibirskogo metallurgicheskogo instituta.
(Boring machinery—Cooling)

APPROVED FOR RELEASE: 07/12/2001 CIA-RDP86-00513R001135320017-8"

"APPROVED FOR RELEASE: 07/12/2001 CIA-RDP86-00513R001135320017-8

MOSKALEV, A.N., inzh.

Effect of the ring system for cooling a thermal drill with water and liquid fuel on rock breaking. Izv. vys. ucheb. zav.; gor. zhur. no.11:72-75 '61. (MIRA 15:1)

1. Sibirskiy metallurgicheskiy institut imeni S.Ordzhonikidze. Rekomendovana kafedroy gornykh mashin.
(Boring)

APPROVED FOR RELEASE: 07/12/2001 CIA-RDP86-00513R001135320017-8"

"APPROVED FOR RELEASE: 07/12/2001 CIA-RDP86-00513R001135320017-8

BRICHKIN, A.V.; MOSKALEV, A.N., inzh.

Drillability of rocks using a single-nozzle jet under constant working conditions. Izv. vys. uch. zav.; gor. zhur. 5 no.6: 71-77 '62. (MIRA 15:9)

1. Kazakhskiy politekhnicheskiy institut. Chlen-korrespondent Akademii nauk Kazakhskoy SSR (for Brichkin). 2. Sibirskiy metallurgicheskiy institut imeni S.Ordzhonikidze (for Moskalev). Rekomendovana kafedroy gornykh mashin i podzemnogo transporta Sibirskogo metallurgicheskogo instituta.
(Rocks—Testing) (Boring machinery)

APPROVED FOR RELEASE: 07/12/2001 CIA-RDP86-00513R001135320017-8"

"APPROVED FOR RELEASE: 07/12/2001 CIA-RDP86-00513R001135320017-8

MOSKALEV, A.N., kand. tekhn. nauk

Technical and economic indices of thermal drilling in Kuznetsk Basin mines. Izv. vys. ucheb. zav.; gor. zhur. 6 no.6:93-97 '63. (MIRA 16:8)

1. Sibirskiy metallurgicheskiy institut imeni Ordzhonikidze. Rekomendovana kafedroy gornykh mashin i rudnichnogo transporta.
(Kuznetsk Basin—Boring)

APPROVED FOR RELEASE: 07/12/2001 CIA-RDP86-00513R001135320017-8"

"APPROVED FOR RELEASE: 07/12/2001 CIA-RDP86-00513R001135320017-8

MOSKALEV, A.N., inzh.

Basis of indices and the comparative scale of resistivity of some rocks to piercing with jet torches. Izv.vys.ucheb.zav.:gor.zhur. 7 no. 1:91-95 '64. (MIRA 17:5)

1. Sibirskiy metallurgicheskiy institut imeni Sergo Ordzhonikidze. Rekomendovana kafedroy gornykh mashin.

APPROVED FOR RELEASE: 07/12/2001 CIA-RDP86-00513R001135320017-8"

"APPROVED FOR RELEASE: 07/12/2001 CIA-RDP86-00513R001135320017-8

MOSKALEV, A.N., kand. tekhn. nauk; FILATOV, N.V., kand. tekhn. nauk; POPOV, V.M., inzh.; FEDIN, I.A., inzh.

Machines for jet piercing with a ring system of cooling. (MIRA 17:6)
Gor. zhur. no.5:45-46 My '64.

APPROVED FOR RELEASE: 07/12/2001 CIA-RDP86-00513R001135320017-8"

"APPROVED FOR RELEASE: 07/12/2001 CIA-RDP86-00513R001135320017-8

MOSKALEV, A.N., dotsent; FILATOV, N.V., dotsent; POPOV, V.M., inzh.; FEDIN, I.A., inzh.

Efficiency of jet · rches in the jet piercing of rock. Izv.vys.ucheb. zav.;gor.zhur. 7 no.9:68-72 '64. (MIRA 18:1)

1. Sibirskiy metallurgicheskiy institut imeni S. Ordzhonikidze. Rekomendovana kafedroy gornykh mashin i rudnichnogo transporta.

APPROVED FOR RELEASE: 07/12/2001 CIA-RDP86-00513R001135320017-8"

"APPROVED FOR RELEASE: 07/12/2001 CIA-RDP86-00513R001135320017-8

WRITE BELOW THIS LINE

ACCESSION NR: AP4043656 S/0056/64/047/002/0767/0768

AUTHORS: Babenko, N. P.; Konstantinov, I. O.; Moskalev, A. P.; Nemilov, Yu. A.

TITLE: Neutron polarization in the reaction $D(d, n)He^3$

SOURCE: Zh. eksper. i teor. fiz., v. 47, no. 2, 1964, 767-768

TOPIC TAGS: neutron polarization, deuteron scattering, deuteron cross section, deuterium, helium

ABSTRACT: The authors used a previously published (ZhETF v. 45, 1389, 1963) and somewhat improved procedure to measure the polarization of neutrons from the reaction $D(d, n)He^3$ at incident deuteron energies 4.7 and 5.6 MeV, for a reaction angle of 45° in the center-of-mass system. The measurements were made with the extracted beam of the Radium Institute cyclotron at a deuteron energy 6.6 ± 0.1 MeV. The target was gaseous deuterium at a pressure of 4.5 atm in a volume

APPROVED FOR RELEASE: 07/12/2001 CIA-RDP86-00513R001135320017-8"

"APPROVED FOR RELEASE: 07/12/2001 CIA-RDP86-00513R001135320017-8

ACCESSION NR: AP4043656

bounded by two tantalum foils. The neutrons from the reaction were analyzed with a gas-filled scintillation counter at 135°. As shown in Fig. 1 of the enclosure the dependence of the neutron polarization on the incident-deuteron energy, as obtained by various investigators, tends to cluster about two experimental curves. The present results follow the upper curve of the figure. "The authors thank M. B. Miller for help with the measurements." Orig. art. has: 1 figure.

ASSOCIATION: None

SUBMITTED: 14Feb64 ENCL: 01

SUB CODE: NP NR REF SOV: 004 OTHER: 006

Card 2/3

APPROVED FOR RELEASE: 07/12/2001 CIA-RDP86-00513R001135320017-8"

"APPROVED FOR RELEASE: 07/12/2001 CIA-RDP86-00513R001135320017-8

WRITE BELOW THIS LINE

POSTCARD

ACCESSION NR: AP4043656

ENCLOSURE: 01

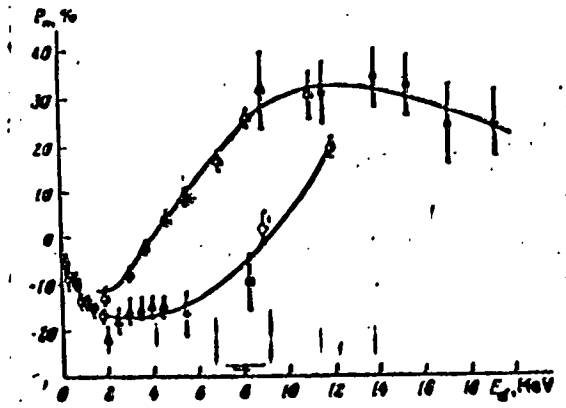

* - present data

Fig. 1. Dependence of polarization of the neutrons from the reaction $D(d, n)He^3$ on the incident-deuteron energy according to various sources.

Card 3/3

APPROVED FOR RELEASE: 07/12/2001 CIA-RDP86-00513R001135320017-8"

"APPROVED FOR RELEASE: 07/12/2001 CIA-RDP86-00513R001135320017-8

S/0056/64/047/002/0771/0773

ACCESSION NR: AP4043658

AUTHORS: Anisovich, V. V.; Moskalev, A. N.; Fomin, V. V.

TITLE: Influence of logarithmic singularities on the parameters of certain resonances

SOURCE: Zh. eksper. i teor. fiz., v. 47, no. 2, 1964, 771-773

TOPIC TAGS: resonance scattering, omega meson, sigma particle, pion, rho meson

ABSTRACT: The purpose of this note is to call attention to the fact that resonances in the systems $\rho\pi$ (A-resonance), $\omega\pi$ (B-resonance), and $\Sigma\pi$ (Y_0^*-resonance) were investigated in the past in the majority of cases under conditions in which the spectra of the particles $\rho\pi$, $\omega\pi$, and $\Sigma\pi$, in the region of resonant values of energy could be strongly influenced by logarithmic singularities of the type indicated by I. J. R. Aitchison, (Phys. Rev. v. 133, B1257, 1964).

Card 1/2

APPROVED FOR RELEASE: 07/12/2001 CIA-RDP86-00513R001135320017-8"

"APPROVED FOR RELEASE: 07/12/2001 CIA-RDP86-00513R001135320017-8

ACCESSION NR: AP4043658

Arguments are presented in favor of assuming that the observed large width of the A-resonance is indeed connected with the presence of such singularities. The decrease in the probability of $\omega\pi^+$ production in the vicinity of 150 MeV, which has effectively led to a decrease in the observed resonance width, is also ascribed to this singularity. In the case of the $\Sigma\pi$ resonance, it is quite possible that the λ_{1405} resonance does not exist at all. "The authors express deep gratitude to V. M. Shekhter for a discussion of several problems and to N. B. Brovtsy*na for carrying out the numerical calculations." Orig. art. has: 2 figures and 2 formulas.

ASSOCIATION: Fiziko-tekhnicheskiy institut im. A. F. Ioffe Akademii nauk SSSR (Physicotechnical Institute, Academy of Sciences SSSR)

SUBMITTED: 24Apr64 ENCL: 00

SUB CODE: NP NR REF SOV: 001 OTHER: 011

Card 2/2

APPROVED FOR RELEASE: 07/12/2001 CIA-RDP86-00513R001135320017-8"

"APPROVED FOR RELEASE: 07/12/2001 CIA-RDP86-00513R001135320017-8

L 57831-65 EWP(k)/EWA(c)/EWT(m)/EWP(b)/T/EWP(v)/EWP(t) Pf-4 JD/HM

ACCESSION NR: AP5012645 UR/0135/65/000/005/0034/0034

621.791.94.03

25

AUTHOR: Moskalev, A. N. (Candidate of technical sciences); Filatov, N. V. (Candidate of technical sciences); Popov, V. M. (Engineer); Fedin, I. A. (Engineer)

TITLE: Burning openings in 200-400 mm thick metal with a rocket-type torch

SOURCE: Svarochnoye proizvodstvo, no. 5, 1965, 34

TOPIC TAGS: flame cutting, cutting torch, cast iron torch cutting

ABSTRACT: Results are given of tests on burning openings in metal (cast iron shafts, molds, etc) with thicknesses of 200 to 400 mm with a kerosene-oxygen flame. The construction and operation of the rocket-type torch and cutting technology are described. Openings with a diameter of 55-60 mm are burned at a rate of 7-10 m/hr. Oxygen consumption is 25 to 50% less than in oxygen torch cutting. Openings can be burned in shafts with a diameter of 300-400 mm and in cast iron molds with thicknesses of 200-400 mm with the torch maintained in one position. Orig. art. has: 1 figure, 1 table.

Card 1/2

APPROVED FOR RELEASE: 07/12/2001 CIA-RDP86-00513R001135320017-8"

"APPROVED FOR RELEASE: 07/12/2001 CIA-RDP86-00513R001135320017-8

L 57831-65
ACCESSION NR: AP5012645

2

ASSOCIATION: Filial instituta mekhaniki AN UkrSSR (Affiliate of the Institute of Mechanics, UkrSSR); Sibirskiy metallurgicheskiy institut (Siberian Metallurgical Institute)

SUBMITTED: 00 ENCL: 00 SUB CODE: MM

NO REF SOV: 001 OTHER: 000

Card 2/2

APPROVED FOR RELEASE: 07/12/2001 CIA-RDP86-00513R001135320017-8"