"APPROVED FOR RELEASE: 03/13/2001 CIA-RDP86-00513R001135910003-8

The content of ascorbic acid in the leaves of the cotton plant. L. Kh. Naaber. *Izvest. Akad. Nauk Uzbek. S.S.R.* 1956, No. 5, 11-16; *Referat. Zhur., Khim., Biol. Khim.* 1957, No. 3870.—During the blooming and seed-producing periods the ascorbic acid (I) content of the leaves was reduced.—As the leaves matured and became older the content of free I was lowered and the content of bound I increased. B. S. Levine.

APPROVED FOR RELEASE: 03/13/2001 CIA-RDP86-00513R001135910003-8"

"APPROVED FOR RELEASE: 03/13/2001 CIA-RDP86-00513R001135910003-8

M-4

USSR / Cultivated Plants. Commercial, Oleaceous, Sugar Bearing.

Abs Jour : Ref Zhur - Biologiya, No 2, 1959, No. 6335

Author : Naaber, L. Kh.
Inst : Acad. Sci. Uzb SSR
Title : Physiological Processes in Cotton Plants During Defoliation

Orig Pub : V sb.: Materialy mezhresp. soveshchaniya po koordinatsii nauchno-izsled. rabot po khlopkovodstvu, 1957 g., Tashkent, AN Uzb SSR, 1957, 235-239

Abstract : Individual leaves were treated with chemical preparations by immersion or vacuum-infiltration. The whole plant was also sprayed in the case of the 108-f variety in the period when 2 - 4 bolls open. Phenylthiourea and

Card 1/3

APPROVED FOR RELEASE: 03/13/2001 CIA-RDP86-00513R001135910003-8"

"APPROVED FOR RELEASE: 03/13/2001 CIA-RDP86-00513R001135910003-8

USSR / Cultivated Plants. Commercial, Oleaceous, Sugar Bearing. M-4

Abs Jour : Ref Zhur - Biologiya, No 2, 1959, No. 6335

salts, magnesium chlorate and endotal. Methyl-endotal stimulated absorption of CO_2 without lowering the breathing intensity in view of the activation of the oxydizing system; other defoliation agents impede the photosynthesis and breathing. An exception was found in thiourea, which activated respiration through the catalase system, after having inhibited its first phase. -- E. E. Kravtsova

Card 3/3

APPROVED FOR RELEASE: 03/13/2001 CIA-RDP86-00513R001135910003-8"

"APPROVED FOR RELEASE: 03/13/2001 CIA-RDP86-00513R001135910003-8

APPROVED FOR RELEASE: 03/13/2001 CIA-RDP86-00513R001135910003-8"

"APPROVED FOR RELEASE: 03/13/2001 CIA-RDP86-00513R001135910003-8

NAABER, L.Kh.

Effect of magnesium chlorate on photosynthesis and associated metabolic processes in cotton leaves. Uzb.biol.zhur. no.1:7-17 '58. (MIRA 11:12)

1. Institut botaniki AN UzSSR.
(Magnesium chlorate) (Cotton growing)

APPROVED FOR RELEASE: 03/13/2001 CIA-RDP86-00513R001135910003-8"

"APPROVED FOR RELEASE: 03/13/2001 CIA-RDP86-00513R001135910003-8

ZAKHAR'YANTS, I.L.; NAABER, L.Kh.

Photosynthetic characteristics of cotton. Uzb.biol.zhur. no.6:32-36 '61. (MIRA 15:2)

(Cotton) (Photosynthesis)

APPROVED FOR RELEASE: 03/13/2001 CIA-RDP86-00513R001135910003-8"

"APPROVED FOR RELEASE: 03/13/2001 CIA-RDP86-00513R001135910003-8

NAABER, L.Kh.; ZAKHAR'YANTS, I.L.

Photosynthetic characteristics of ephermeral plants in southern Kyzyl Kum. Bot. zhur. 46 no.8:1116-1124 Ag '61. (MIRA 15:1)
(Kyzyl Kum--Plants, Effect of light on)
(Photosynthesis)

APPROVED FOR RELEASE: 03/13/2001 CIA-RDP86-00513R001135910003-8"

"APPROVED FOR RELEASE: 03/13/2001 CIA-RDP86-00513R001135910003-8

NAABER, L.Kh.

Potential intensity of photosynthesis in Aegilops L. species. Bot.zhur. 49 no.10:1458-1462 O '64. (MIRA 18:1)

1. Institut botaniki AN Uzbekskoy SSR, Tashkent.

APPROVED FOR RELEASE: 03/13/2001 CIA-RDP86-00513R001135910003-8"

"APPROVED FOR RELEASE: 03/13/2001 CIA-RDP86-00513R001135910003-8

NAAN, . . I.

NAAN, . . I. Sovremennyy Fizicheskiy i [illegible] v Sovete i [illegible] na [illegible] po,avshchiy i r aktsii.-Sm. 20 [illegible]

SO: [illegible] ZHURNAL STAT.Y - Vol. 28, Moskva, 1949

APPROVED FOR RELEASE: 03/13/2001 CIA-RDP86-00513R001135910003-8"

"APPROVED FOR RELEASE: 03/13/2001 CIA-RDP86-00513R001135910003-8

NAAN, G.I., deystvitel'nyy chlen.

Struggle of materialism and idealism in modern cosmology. Eesti NSV Tead.Akad.Toim.1 no.1:81-89 '52. (MLRA 6:11)

1. Akademiya nauk Estonskoy SSR. (Cosmology) (Relativity (Physics))

APPROVED FOR RELEASE: 03/13/2001 CIA-RDP86-00513R001135910003-8"

"APPROVED FOR RELEASE: 03/13/2001 CIA-RDP86-00513R001135910003-8

SOV/137-58-9-18211

Translation from: Referativnyy zhurnal, Metallurgiya, 1958, Nr 9, p 1 (USSR)

AUTHOR: Naan, G.

TITLE: Problems and Prospects of the Development of Science in Soviet Esthonia (Zadachi i perspektivy razvitiya nauki v Sovetskoy Estonii)

PERIODICAL: Kommunist Estonii, 1958, Nr 1, pp 47-56

ABSTRACT: Bibliographic entry

1. Scientific research--USSR

Card 1/1

APPROVED FOR RELEASE: 03/13/2001 CIA-RDP86-00513R001135910003-8"

"APPROVED FOR RELEASE: 03/13/2001 CIA-RDP86-00513R001135910003-8

S/035/59/000/003/028/039
A001/A001

Translation from: Referativnyy zhurnal, Astronomiya i Geodeziya, 1959, No. 3, p. 66, # 2089

AUTHOR: Naan, G. I.

TITLE: On the Present State of Cosmological Science

PERIODICAL: V sb.: Vopr. kosmogonii, Vol. 6, Moscow, AN SSSR, 1958, pp. 277-329 (German summary)

TEXT: Cosmology is considered as a border region of knowledge where meet astronomy, theoretical physics and philosophy. From this standpoint cosmological paradoxes (gravitational, photometric, thermodynamical and expansion) are analyzed. Their origin is, after all, due apparently to our tendency to ascribe to infinity the properties of finiteness. Expansion paradox (which manifests itself in appearance of various singularities) is a main paradox of modern cosmology (cosmology of the metagalaxy). It appears in all relativistic cosmological models. Renouncing the "cosmological principle" (allowance for non-homogeneity and anisotropy in substratum distribution) also does not apparently eliminate this difficulty. Other cosmological theories (not based on relativistic

Card 1/2

APPROVED FOR RELEASE: 03/13/2001 CIA-RDP86-00513R001135910003-8"

"APPROVED FOR RELEASE: 03/13/2001 CIA-RDP86-00513R001135910003-8

gravitation theory) also do not yield, for various causes, a satisfactory solution of the problem. The author holds that the cosmological problem can not apparently be solved as a purely gravitational one. "Cosmic forces" of other nature have to be taken into account. Their nature however is not clear. It is possible that they can be taken into account (to a first approximation) by modifying gravitational equations by means of the "cosmological term", tensor of "creation field" or by introducing into energy-momentum tensor of components corresponding to negative pressures. One of the possible mechanisms, justifying assumptions of this kind, is transformation of a gravitational field into matter. Assuming that modern relativistic models describe correctly, in general features, the behavior of the metagalaxy at some "intermediate" stages of its evolution and that there are no processes of catastrophic, large-scale explosion nature in the course of this evolution, a hypothesis may be advanced that on the whole the evolution of the metagalaxy is a "smoothed oscillating of the second kind". It is noted that the latest data of extragalactic astronomy bring us nearer to the possibility of the serious observational checking of cosmological conclusions. There are 73 references.

From author's summary

Translator's note This is the full translation of the original Russian abstract

APPROVED FOR RELEASE: 03/13/2001 CIA-RDP86-00513R001135910003-8"

"APPROVED FOR RELEASE: 03/13/2001 CIA-RDP86-00513R001135910003-8

PHASE I BOOK EXPLOITATION SOV/3609

Soveshchaniye po voprosam kosmogonii, 6th, 1957.

Trudy soveshchaniya...; vnegalakticheskaya astronomiya i kosmologiya (Transactions of the 6th Conference on Problems of Cosmogony; Extragalactic Astronomy and Cosmology) Moscow, Izd-vo AN SSSR, 1959. 273 p. Errata slip inserted. 1,500 copies printed.

Sponsoring Agency: Akademiya nauk SSSR. Astronomicheskiy Sovet.

Editorial Board: D.A. Frank-Kamenetskiy, Professor (Resp. Ed.); B.A. Voronts'ov-Vel'yaminov, Corresponding Member, Academy of Pedagogical Sciences USSR; Ya. A. Smorodinskiy, Professor; A.L. Zel'manov, Senior Scientific Contributor, and R.Z. Sagdeyev (Scientific Secretary) Junior Scientific Contributor, Ed. of Publishing House: L.V. Semsonenko; Tech. Ed.: O.N. Shevchenko.

PURPOSE: The publication is intended for astronomers, geophysicists and theoretical physicists interested in general problems of cosmology.

COVERAGE: This is a collection of reports given at the 6th Conference on the Problems of Cosmogony, June 5-7, 1957. In the publication observational data in the field of extragalactic astronomy are summarized, the data are analyzed from a theoretical point of view, and the accuracy and reliability of the observations are evaluated. The relativistic cosmological theories are discussed in detail for the first time in Soviet literature and correlated with observational data, primarily with the red-shift measurements. The relationship of cosmology to the theory of the formation of chemical elements and general thermodynamic and philosophical problems of cosmology are also investigated. No personalities are mentioned. References accompany some of the articles.

MORNING SESSION OF JUNE 6.

COSMOLOGICAL THEORIES BASED ON THE GRAVITATION THEORY

Smorodinskiy, A.Ya. Isotropic Models of the Universe 131
Discussion by E. Schmutzer (East Germany) 138

Lifshits, Ye.M. Gravitational Stability in the General Theory of Relativity (Summary of the Report) 141
Discussion by E.A. Dibay 142

Zel'manov, A.L. On the Relativistic Theory of an Anisotropic Nonuniform Universe 144
Discussion by N.F. Shirokov 173

Shirokov, N.F. The Theory of Red Shift in the Spectra of Distant Nebulae 175
Discussion by V.N. Fayn 183
Discussion by S.V. Mitskevich 185

EVENING SESSION OF JUNE 6.

RADIO ASTRONOMY AND COSMOLOGY. ORIGIN OF CHEMICAL ELEMENTS

Shklovskiy, I.S. Radio Astronomy and Cosmology (Summary of the Report) 186
Discussion by I.M. Gordon 189

Cherdyntsev, V.V. Conditions for Formation of Atomic Nuclei, According to the Data on Their Abundance 192

Frank-Kamenetskiy, D.A. Origin of Chemical Elements From the Point of View of the Theory of the Internal Structure and Evolution of Stars 200
Discussion by B.A. Tverskiy 209
Discussion by R.Z. Sagdeyev and A.A. Vedenov 212

MORNING SESSION OF JUNE 7.

GENERAL PROBLEMS OF COSMOLOGY

Terletskiy, Ya.P. The Problems of Statistical Physics and Thermodynamics of Gravitating Systems 214

Stanyukovich, K.P. The Problem of Thermodynamics of the Universe 219
Discussion by F.A. Tsitsin 229

Plotkin, I.F. Some Remarks Concerning the Law of Entropy Increase 234
Discussion by D.A. Frank-Kamenetskiy 240

Ivanenko, D.I. General Problems of Cosmology 244
Discussion by F.Yu. Zigel' 259

Idlis, G.M. Structural Infinity of the Universe and the Metagalaxy as a Typical Inhabitable Cosmic System (Summary of the Report) 270

APPROVED FOR RELEASE: 03/13/2001 CIA-RDP86-00513R001135910003-8"

"APPROVED FOR RELEASE: 03/13/2001 CIA-RDP86-00513R001135910003-8

S/035/62/000/011/002/079
A001/A101

AUTHOR: Naan, G. I.

TITLE: On infinity of the Universe

PERIODICAL: Referativnyy zhurnal, Astronomiya i Geodeziya, no. 11, 1962, 3, abstract 11A2 ("Vopr. filisofii", 1961, no. 6, 93 - 105, 186, English summary)

TEXT: The author notes that identification of the concepts of infinite and boundless, still encountered in the philosophical literature, is incorrect. He shows that the problem of the infinity of the Universe can and must be studied by the joint efforts of philosophers, physicists, astronomers and mathematicians. In the author's opinion, modern data of physics and astronomy provide no grounds to assume that the Universe may be finite. The Universe is boundless and infinite.

I. N.

[Abstracter's note: Complete translation]

Card 1/1

APPROVED FOR RELEASE: 03/13/2001 CIA-RDP86-00513R001135910003-8"

"APPROVED FOR RELEASE: 03/13/2001 CIA-RDP86-00513R001135910003-8

ACC NR: AP6027544 SOURCE CODE: UR/0384/66/000/003/0015/0018

AUTHOR: Naan, G. I. (Academician AN EstSSR)

ORG: AN Estonian SSR (AN Estonskoy SSR)

TITLE: The revolution in astronomy

SOURCE: Zemlya i vselennaya, no. 3, 1966, 15-18

TOPIC TAGS: astronomy, galactic structure, gravitation field, relativity principle

ABSTRACT: The author describes the revolution taking place in the theory of astronomy. The common view that planets, stars and stellar systems are formed by the concentration of defused matter (gas, dust) is being replaced by opposite views which indicate that cosmic objects may be the result of differentiation, breakdown, and explosion of concentrated matter. In these catastrophic processes, the velocity of matter is close to that of light, while the gravitational fields are fantastically large; therefore, the effects predicted by the general theory of relativity become paramount. The implications of this theory for space phenomena are discussed. Universe lines are discontinuous. Neither these lines nor space-time itself can be extended beyond a definite limit. Beginning at this limit, one can no longer speak of conservation laws. At the present, astronomers are psychologically prepared for the possibility that there are no absolute laws of conservation and that any conservation law has an absolute nature on-

APPROVED FOR RELEASE: 03/13/2001 CIA-RDP86-00513R001135910003-8"

"APPROVED FOR RELEASE: 03/13/2001 CIA-RDP86-00513R001135910003-8

ACC NR: AP6027544

ly for a specific group of phenomena. It is conceivable that, in the final analysis, it will be possible to explain the catastrophic processes in space by existing theories. However, it is more probable that super sources of energy in the universe will serve as stimuli and sources for entirely new knowledge, concepts and representations. Orig. art. has: 5 figures.

SUB CODE: 03/ SUBM DATE: none

Card 2/2

APPROVED FOR RELEASE: 03/13/2001 CIA-RDP86-00513R001135910003-8"

"APPROVED FOR RELEASE: 03/13/2001 CIA-RDP86-00513R001135910003-8

ACC NR: AT6027584 SOURCE CODE: UR/0000/66/000/000/0021/0035

AUTHOR: Naan, G. I. (Academician AN EstSSR)

ORG: none

TITLE: Revolution in astronomy

SOURCE: Zvezdy i vselennaya (Stars and the universe). Moscow, Izd-vo Znaniye, 1966, 21-35

TOPIC TAGS: cosmogony, metagalaxy, neutrino

ABSTRACT: The concept of initially structureless substances (Kepler's theory of the chaos of ancient, ethereal substances, and the idea of the diffusion of matter, i.e., of gas and dust) prevailed in astronomy for a long time. The ideas of V. A. Ambartsumyan on the originally (prestellar) dense or even ultradense state of substances were generally disbelieved until recently. Recent discoveries of the cosmogenic activity of galaxy cores, expanding galaxies, superstars (quasars), quasiastral galaxies, and radiofrequency radiations on 7.3 cm waves, indicated the ultradense state of the metagalaxy in the past. According to such an authority as Sandage, ultradense objects could be the main components of metagalaxies. This was the first line of revolutionary changes in our concepts of the universe. It was followed by a revision of our ideas on the properties and structure of the space-time system and some of the principles of

Card 1/2

APPROVED FOR RELEASE: 03/13/2001 CIA-RDP86-00513R001135910003-8"

"APPROVED FOR RELEASE: 03/13/2001 CIA-RDP86-00513R001135910003-8

ACC NR: AT6027584

the theory of relativity. They involved the interpretation of the red shift by the Hubble law (metagalaxies expand and the space curvature changes) and the plotting of more complex cosmological models (Moebus strip, Schwartzschild sphere, Minkovskiy diagram). Our physical concepts are based on certain universal laws, namely the law of the conservation of energy. This law was refuted 30 years ago by the discovery of radioactive beta decay. Bohr assumed that the law of the conservation of energy does not apply to nuclear phenomena. In 1930, Pauli offered a hypothesis on the existence of a peculiar, imperceptible particle, carrying away that part of energy, impulse, and momentum missing to produce agreement with the law on the conservation of energy. This imperceptible particle was covered 29 years later, in the form of the neutrino. During the interim, one had either to take for granted the universal law of the conservation of energy or to admit the presence of an imperceptible particle. This kind of approach can now be pursued. When universal laws are further refuted by contradicting discoveries, a new imperceptible particle, a world (e.g., antiworld), field interrelations, etc., can be postulated to save these laws. If later on the imperceptible particle is discovered, then the hypothesis will become theory. The application of a not-too-well-understood theory to an entirely incomprehensible occurrence has in any case its advantages at the present time since, according to the renowned theoretical physicist Chu, "we still do not understand the physical mechanism of energy emanation in supersters and their internal structure." Orig. art. has: 6 fig.

SUB CODE: 03/ SUBM DATE: 22Apr66

Card 2/2

APPROVED FOR RELEASE: 03/13/2001 CIA-RDP86-00513R001135910003-8"

"APPROVED FOR RELEASE: 03/13/2001 CIA-RDP86-00513R001135910003-8

DYTNERSKIY, Yu.I., kand.tekhn.nauk; KASATKIN, A.G., doktor tekhn.nauk; KOCHERGIN, N.V.; VOLKOV, T.M.; [redacted] Yu. [Naarep, E.]

Industrial application of turbogrid-type plates for recovering natural gasoline by solar oil. Koks i khim. no.16:40-43 '61. (MIRA 15:2)

1. Moskovskiy Ordena Lenina khimiko-tekhnologicheskiy institut im. D.I.Mendeleyeva (Dytnerskiy, Kasatkin, Kochergin). 2. Slantsepererabatyvayushchiy kombinat, g. Kokhtla-Yarve (for Volkov). 3. Institut slantsev Estonskogo Soveta Narodnogo Khozyaystva (for Nyarep).

(Gasoline)
(Plate towers)

APPROVED FOR RELEASE: 03/13/2001 CIA-RDP86-00513R001135910003-8"

"APPROVED FOR RELEASE: 03/13/2001 CIA-RDP86-00513R001135910003-8

NAARITS, S. O., CAND MED SCI, "COURSE AND MANAGEMENT OF PREGNANCY AND LABOR IN VARICOSE PHLEBECTASIA." LENINGRAD, 1961. (LENINGRAD STATE ORDER OF LENIN INST OF ADVANCED TRAINING OF PHYSICIANS IMENI S. M. KIROV). (KL-DV, 11-61, 229).

APPROVED FOR RELEASE: 03/13/2001 CIA-RDP86-00513R001135910003-8"

"APPROVED FOR RELEASE: 03/13/2001 CIA-RDP86-00513R001135910003-8

NAARITS, S. O., aspirant

Course and management of pregnancy and labor in patients with varicose veins. Akush. i gin. no.3:60-65 '61. (MIRA 14:12)

1. Iz Instituta akusherstva i ginekologii (dir. - chlen-korrespondent AMN SSSR prof. P. A. Beloshapko[deceased]) AMN SSSR.

(PREGNANCY, COMPLICATIONS) (VARIX)

APPROVED FOR RELEASE: 03/13/2001 CIA-RDP86-00513R001135910003-8"

"APPROVED FOR RELEASE: 03/13/2001 CIA-RDP86-00513R001135910003-8

NAASTASE, Gh.; SPERANJA, Gh.; CARNIOL, M.; LAZAR, M.; CAHANE, G.; MARCULESCU, D.

Investigations on certain seric anti-hyaluronidases during cancer of the skin. Rumanian M. Rev. 1 no.2:73-77 Apr-June 57.

(SKIN NEOPLASMS, blood in
hyaluronidase antag.)

(HYALURONIDASE, in blood
antag. in cancer of skin)

APPROVED FOR RELEASE: 03/13/2001 CIA-RDP86-00513R001135910003-8"

"APPROVED FOR RELEASE: 03/13/2001 CIA-RDP86-00513R001135910003-8

L 25743-65 EWT(1)/EWA(h) Peb

ACCESSION NR: AP5002083 S/0146/64/007/006/0020/0025

9
6
B

AUTHOR: Nasts, I. E.

TITLE: Device for oscilloscopic indication of distributed-parameter control data

SOURCE: IVUZ. Priborostroyeniye, v. 7, no. 6, 1964, 20-25

TOPIC TAGS: distributed parameter indication

ABSTRACT: A device for displaying (on an oscilloscope screen) the values of a distributed parameter is considered. Point-type sensors are scanned, and their signals are displayed in a matrix-shaped pattern on the screen. If the measurand is within permissible limits, the device sends a negative pulse (beam blackout) to the scope, and a pale dash is displayed; if the measurand is under the lower limit, the device sends one positive pulse to the scope which is displayed as one brilliant dot; if the measurand exceeds the upper limit, the device causes two brilliant dots to appear on the screen. An electron-tube circuit comprises 2 pulse-height

Card 1/2

APPROVED FOR RELEASE: 03/13/2001 CIA-RDP86-00513R001135910003-8"

"APPROVED FOR RELEASE: 03/13/2001 CIA-RDP86-00513R001135910003-8

L 25743-65

ACCESSION NR: AP5002083

discriminators, a pulse shaper, an anticoincidence device, and an OR-gate. The longest (two-dot) signal is displayed within 1 msec. Orig. art. has: 4 figures and 1 formula.

ASSOCIATION: Tomskiy politekhnicheskiy institut (Tomsk Polytechnic Institute)

SUBMITTED: 20Feb64 ENCL: 00

SUB CODE: DP NO REF SOV: 001 OTHER: 001

Card 2/2

APPROVED FOR RELEASE: 03/13/2001 CIA-RDP86-00513R001135910003-8"

"APPROVED FOR RELEASE: 03/13/2001 CIA-RDP86-00513R001135910003-8

L 47307-66

ACC NR: AR6025788 SOURCE CODE: UR/0058/66/000/004/H014/H014

AUTHOR: Naats, I. Z.

TITLE: Determination of the limiting interval of quantization when recording spatially distributed parameters

SOURCE: Ref. zh. Fizika, Abs. 4Zh109

REF. SOURCE: Izv. Tomskogo politekhn. in-ta, v. 138, 1965, 94-98

TOPIC TAGS: data processing system, distribution function, correlation function, interpolation, parametric equation, mean square error

ABSTRACT: The author considers the problem of determining the limiting interval of spatial quantization h_0, when the pickups are distributed uniformly in the controlled field and the representation of the distribution curve $f(\ell)$ with respect to the discrete readings $f(\ell_k)$ is with the aid of trigonometric interpolation polynomials, the error of such a representation not exceeding the error measurement of the parameter at the measurement point. The correlation function of the parametric field and the rms error of the measurement of the parameter are assumed to be known. It is shown that the interval of quantization is determined by structural properties of the parametric field and by the rms error of the measurement. Using the method of truncating

Card 1/2

APPROVED FOR RELEASE: 03/13/2001 CIA-RDP86-00513R001135910003-8"

"APPROVED FOR RELEASE: 03/13/2001 CIA-RDP86-00513R001135910003-8

L 47307-66

ACC NR: AR6025788

the trigonometric series and representing the continuous function $f(\ell)$, as well as suitable estimates of the expansion coefficients, the author has obtained an equation for the determination of h_0 for a specified measuring error. By way of illustration of the method, an example was considered in which the distances between pickups were used in the control of the temperature field are calculated. A. Pushin. [Translation of abstract]

SUB CODE: 12, 09

Card 2/2 afs

APPROVED FOR RELEASE: 03/13/2001 CIA-RDP86-00513R001135910003-8"

"APPROVED FOR RELEASE: 03/13/2001 CIA-RDP86-00513R001135910003-8

NABABKIN, F. G.

Afforestation

Sofia Popkova's forest improvement brigade. Les i step' n. 3, 195[illegible].

Monthly List of Russian Accessions, Library of Congress, July 195[illegible].
Unclassified.

APPROVED FOR RELEASE: 03/13/2001 CIA-RDP86-00513R001135910003-8"

"APPROVED FOR RELEASE: 03/13/2001 CIA-RDP86-00513R001135910003-8

NABAKOV, V. A., GADALIN, Yu. I., GERSHKOVICH, N. L., GORCHAKOVSKAYA, N. N., and LEVIT, A. B.

"The Use of Insecticide Fumes for Controlling the Tick Ixodes Persulcatus," Zhur. Mikrobiol., Epidemiol., i Immunobiol., No. 4, pp 92-97, 1955.

Translation D 300831

APPROVED FOR RELEASE: 03/13/2001 CIA-RDP86-00513R001135910003-8"

"APPROVED FOR RELEASE: 03/13/2001 CIA-RDP86-00513R001135910003-8

NABARCHIK, I., student; SHKARUPA, Z. (Chekhoslovatskaya Respublika); KHOMUTOV, N.Ye., rukovoditel'

Electrolysis in mixed solutions of borax and potash. Trudy MKHTI no.26:77-84 '59. (MIRA 13:9)
(Electrolysis) (Borax) (Potash)

APPROVED FOR RELEASE: 03/13/2001 CIA-RDP86-00513R001135910003-8"

"APPROVED FOR RELEASE: 03/13/2001 CIA-RDP86-00513R001135910003-8

L 36505-65 EWA(h)/EWT(1) Peb

ACCESSION NR: AT5004673 S/3128/64/000/001/0151/0159 12

AUTHOR: Zharnov, V. S.; Marashov, Ye. P.; Nabatnikov, A. A. 10

TITLE: Pulsed linear-logarithmic amplifier 25 B+1

SOURCE: Yadernoye priborostroyeniye; nauchno-tekhnicheskiy sbornik, no. 1, 1964, 151-159

TOPIC TAGS: logarithmic amplifier

ABSTRACT: The input signal is simultaneously applied to n amplifier-limiters which have their different gains and one output-signal-limiting threshold (the system suggested by J. Crony; also see S. I. Solms. Logarithmic Amplifier Design. IRE Trans., Instrum. I-8, 3, 91, 1959). The development of a semiconductor log amplifier consisting of three units with input voltages of 5—50, 50—500, and 500—5000 mv and an output voltage within 0.1—2.8 v is reported. Principal circuits are shown and explained. An experimental model showed a

Card 1/2

APPROVED FOR RELEASE: 03/13/2001 CIA-RDP86-00513R001135910003-8"

"APPROVED FOR RELEASE: 03/13/2001 CIA-RDP86-00513R001135910003-8

L 36050S-65

ACCESSION NR: AT5004673

2

front-rise time of 2 μsec on a square pulse without any drooping of the 20-μsec pulse top. At a 2.5-kc input-pulse frequency, the input impedance was 10 kohms or higher, and the output impedance, 150 ohms or lower. The temperature error was roughly 0.1% per 1C within -40+60C. The amplifier proved sensitive to supply-voltage ripples. "In conclusion, the authors wish to thank S. I. Zharova for her help in experimentation work, and B. I. Khazanov for his criticisms." Orig. art. has: 8 figures and 6 formulas.

ASSOCIATION: none

SUBMITTED: 00 ENCL: 00 SUB CODE: EC

NO REF SOV: 005 OTHER: 001

Card 2/2

APPROVED FOR RELEASE: 03/13/2001 CIA-RDP86-00513R001135910003-8"

"APPROVED FOR RELEASE: 03/13/2001 CIA-RDP86-00513R001135910003-8

L 36507-65 EWT(d) Pg-4/Pk-4/Pl-4/Po-4/Pq-4

ACCESSION NR: AT5004674 S/3128/64/000/001/0160/0165 33

AUTHOR: Zhernov, V. S.; Murashov, Ya. P.; Nabatnikov, A. A. B+1

TITLE: Linear count-rate meter covering three orders of magnitude

SOURCE: Yadernoye priborostroyeniye: nauchno-tekhnicheskiy sbornik, no. 1, 1964, 160-165

TOPIC TAGS: intensimeter, count rate meter 10

ABSTRACT: The development of a modification of the count-rate meter of G. Gianelli, et al. (Rev. Sc. Instr., 31, 6, 623, 1960) is briefly reported. The modification differs in that the normalizer pulse is taken from the emitter of a blocking-generator transistor, not from the additional winding of its transformer. This permits obtaining a considerable pulse power with still satisfactory resolution (10—20 μ sec) of the normalizer within an entire three-order range of pulse rates (0.5—5000 pulse/sec). A variant of the pulse-rate-difference meter

Card 1/2

APPROVED FOR RELEASE: 03/13/2001 CIA-RDP86-00513R001135910003-8"

"APPROVED FOR RELEASE: 03/13/2001 CIA-RDP86-00513R001135910003-8

L 36507-65

ACCESSION NR: AT5004674

was also developed. "In conclusion, the authors wish to thank B. I. Khaganov for a useful discussion of the results." Orig. art. has: 5 figures and 1 formula.

ASSOCIATION: none

SUBMITTED: 00 ENCL: 00 SUB CODE: NP, EC

NO REF SOV: 002 OTHER: 001

Card 2/2

APPROVED FOR RELEASE: 03/13/2001 CIA-RDP86-00513R001135910003-8"

"APPROVED FOR RELEASE: 03/13/2001 CIA-RDP86-00513R001135910003-8

ACC NR: AP7001386 (A,N) SOURCE CODE: UR/0413/66/000/021/0056/0056

INVENTORS: Denisov, N. I.; Zhernov, V. S.; Nabatnikov, A. A.; Murashov, Ye. P.; Ryzhov, N. V.; Serzhantov, V. P.; Skatkin, V. M.

ORG: none

TITLE: Multichannel pulse counting rate meter. Class 21, No. 187843 [announced by Union Scientific Research Institute for Instrument Manufacture (Soyuznyy nauchno-issledovatel'skiy institut priborostroyeniya)]

SOURCE: Izobreteniya, promyshlennyye obraztsy, tovarnyye znaki, no. 21, 1966, 56

TOPIC TAGS: pulse counter, pulse rate, count rate meter

ABSTRACT: This Author Certificate presents a multichannel pulse counting rate meter containing a cathode ray tube, pulse registers, a high-speed electronic switch, and a vertical and horizontal deflection amplifier for the cathode ray tube. To measure counting rate differences varying over a wide range simultaneously in all channels without switching subranges, electronic commutator switches are connected to the outputs of wide-band linear differential counting rate meters, one for each channel (see Fig. 1). The switch outputs are connected through current-setting resistors and isolating capacitors to the input of a collecting stage consisting of a grounded base transistor. The output of the collecting stage is connected to the input of a linear-logarithmic CRT vertical deflection amplifier.

Card 1/2 UDC: 621.374

APPROVED FOR RELEASE: 03/13/2001 CIA-RDP86-00513R001135910003-8"

"APPROVED FOR RELEASE: 03/13/2001 CIA-RDP86-00513R001135910003-8

ACC NR: AP7001386

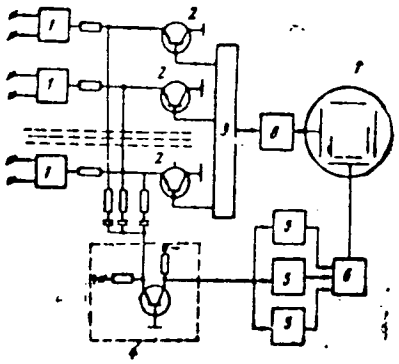

Fig. 1. 1 - counting rate meters; 2 - switches; 3 - decoder; 4 - electronic commutator; 5 - clipper amplifiers; 6 - summing stage; 7 - cathode ray tube; 8 - horizontal deflection amplifier

Orig. art. has: 1 diagram.

SUB CODE: 09/ SUBM DATE: 22Nov63

Card 2/2

APPROVED FOR RELEASE: 03/13/2001 CIA-RDP86-00513R001135910003-8"

"APPROVED FOR RELEASE: 03/13/2001 CIA-RDP86-00513R001135910003-8

KLIMENKO, S.M.; YERSHOV, F.I.; GOFMAN, Yu.P.; NABATNIKOV, A.P.; ZHDANOV, V.M.

Characteristics of the structural organization of the Venezuelan equine encephalomyelitis virus. Vop. virus. 10 no.5:520-525 S-O '65. (MIRA 18:11)

1. Institut virusologii imeni D.I.Ivanovskogo AMN SSSR, Moskva.

APPROVED FOR RELEASE: 03/13/2001 CIA-RDP86-00513R001135910003-8"

"APPROVED FOR RELEASE: 03/13/2001 CIA-RDP86-00513R001135910003-8

BIBIKOV, I.; DEREVYANKO, K.; KAZACHKO, V.; KIRICHENKO, I.; KUCHER, N.; MACHUKHO, A.; NABATNIKOV, P.; SOKOLOV, D.; SIVOKON'Y.; US, V.; SHCHIGALEV, V.; BURAVENKO, N.; KOVSHAROV, S.; SOKOLOV, S.; ZAGORUL'KO, S.; TSYBA, M.; FOMENKO, I.; LYAKHOVETSKIY, M.

Let us help farmers grow an abundant crop. Grazhd. av. no.3:3 Mr '61. (MIRA 14:3)

(Aeronautics in agriculture)

APPROVED FOR RELEASE: 03/13/2001 CIA-RDP86-00513R001135910003-8"

"APPROVED FOR RELEASE: 03/13/2001 CIA-RDP86-00513R001135910003-8

MIRITOV, N.M.

Dynamics of the [illegible] growth of pine plantations [illegible] (MIRA 17:8)

1. Vsesoyuznyy nauchno-[illegible] i mekhanizatsii lesnogo [illegible] Moskovskoy obl.

APPROVED FOR RELEASE: 03/13/2001 CIA-RDP86-00513R001135910003-8"

"APPROVED FOR RELEASE: 03/13/2001 CIA-RDP86-00513R001135910003-8

NABATOV, G.S.

Features of the protocol [illegible] metal structures [illegible] automatic welding. Gaz. [illegible] no.[illegible]3-24 '65. [illegible] 8

.. Kiyevskoye otdeleniye TSentral'nogo nauchno-issledovatel'skogo instituta svyazi Ministerstva svyazi [illegible].

APPROVED FOR RELEASE: 03/13/2001 CIA-RDP86-00513R001135910003-8"

"APPROVED FOR RELEASE: 03/13/2001 CIA-RDP86-00513R001135910003-8

NABATOV, P F

USSR/Medicine - Q-Fever FD-2606

Card 1/1 Pub. 148 - 17/25

Author : Shifrin, I. A. and Nabatov, P. I.

Title : The problem of the role of cattle, sheep, and goats as a source of infection in Q-fever

Periodical : Zhur. mikro. epid. i immun. 4, 76-77, Apr 1955

Abstract : The infectivity of cattle sheep and goats and their role in spreading Q-fever in Central Asia was examined. Agglutination and complement fixation reactions established that sheep and goats were the primary source of infection with Q-fever in the area. Positive reactions were obtained on 24% of the sheep serum, 27.1% of the goat serum, and only 1.8% of the cattle serum. The results of the serological investigation are presented on a chart. No references are cited.

Institution : The Virus Laboratory (Chief - I. A. Shifrin)

Submitted : December 18, 1954

APPROVED FOR RELEASE: 03/13/2001 CIA-RDP86-00513R001135910003-8"

"APPROVED FOR RELEASE: 03/13/2001 CIA-RDP86-00513R001135910003-8

SHIFRIN, I.A.; NABATOV, P.I.

Serum diagnosis of Q fever using an antigen from a local strain of Rickettsia burneti. Zhur.mikrobiol.epid. i immun. 30 no.5:142 My '59. (MIRA 12:9)

(Q FEVER)

APPROVED FOR RELEASE: 03/13/2001 CIA-RDP86-00513R001135910003-8"

"APPROVED FOR RELEASE: 03/13/2001 CIA-RDP86-00513R001135910003-8

S/271/63/000/003/001/049
A060/A126

AUTHOR: Nabatov, V.F.

TITLE: Flip-flop operation using heaterless tetrodes TX-3 Б (TKh-3B) and TX-4 Б (TKh-4B) in automation devices

PERIODICAL: Referativnyy zhurnal, Avtomatika, telemekhanika i vychislitel'naya tekhnika, no. 3, 1963, 7, abstract 3A25 (Tr. Mosk. energ. in-ta, 1962, no. 39, 175 - 185)

TEXT: The paper describes flip-flops using heaterless tetrodes: the physical processes, the selection of circuit elements, the effect of input and load circuits are described. There are 3 figures and 5 references.

V.S.

[Abstracter's note: Complete translation]

Card 1/1

APPROVED FOR RELEASE: 03/13/2001 CIA-RDP86-00513R001135910003-8"

"APPROVED FOR RELEASE: 03/13/2001 CIA-RDP86-00513R001135910003-8

NABATOV, V.F., starshiy inzh.

Systems for regulating automatic assembly of the components of radial ball bearings into a bearing with given radial play. Trudy MEI no.38:305-316 '62. (MIRA 17:2)

APPROVED FOR RELEASE: 03/13/2001 CIA-RDP86-00513R001135910003-8"

"APPROVED FOR RELEASE: 03/13/2001 CIA-RDP86-00513R001135910003-8

L 01264-66

ACCESSION NR: AR5009081 UR/0271/65/000/003/A041/A041
621.316.563.2

40
B

SOURCE: Ref. zh. Avtomatika, telemekhanika i vychislitel'naya tekhnika. Svodnyy tom, Abs. 3A242

AUTHOR: Nabatov, V. F.

TITLE: Constructing counter chains with pnpn diodes

CITED SOURCE: Tr. Mosk. energ. in-ta, vyp. 56, 1964, 287-300

TOPIC TAGS: pulse counter, trigger

TRANSLATION: Principles of designing triggers and counter chains with 4-layer pnpn diodes are considered. Trigger flipping is achieved by introducing current-type feedback and switching capacitors. Transients in the trigger and counter circuits are theoretically investigated. Trigger-switching conditions, switching time, control-pulse repetition period, and pulse heights are considered. Pulse-counter circuits in which switching elements are connected via diode coincidence circuits and coupling transformers are presented. Bibl. 2, figs. 5.

SUB CODE: EC ENCL: 00

Card 1/1 KO

APPROVED FOR RELEASE: 03/13/2001 CIA-RDP86-00513R001135910003-8"

"APPROVED FOR RELEASE: 03/13/2001 CIA-RDP86-00513R001135910003-8

L 53736-65 EPF(c)/EPR/EPA(s)-2/EWT(m)/EWP(i)/EWP(b)/EWP(e) Pq-4/Pr-4/Ps-4/Pt-7
WW/WH

ACCESSION NR: AP5015562 UR/0286/65/000/008/0119/0119
666.189.211

AUTHOR: Shkol'nikov, Ya. A.; Polik, B. M.; Karakhanidi, N. G.; Ivanov, P. K.; Bober, F. L.; Ulybyshev, V. V.; Alen'kin, A. T.; Bugrova, N. N.; Simakov, D. P.; Shchipin, I. Ye.; Gur'yeva, Yu. N.; Yefimova, M. I.; Nechayeva, Ye. S.; Yesilkina, K. M.; Ivanova, A. I.; Dayn, E. P.; Nabatov, V. G.; Novoyevskaya, Ye. A.; Kukin, Ye. B.; Balashov, V. N.; Gamza, L. B.

TITLE: Glass for glass fibers. Class 32, No. 170369

SOURCE: Byulleten' izobreteniy i tovarnykh znakov, no. 8, 1965, 119

TOPIC TAGS: glass, glass fiber

ABSTRACT: An Author Certificate has been issued for a glass suitable for making glass fibers. To increase chemical durability, to prevent corrosion of alloys of aluminum and other light metals, and to improve processability, the glass is formulated to contain: 58—63% SiO_2, 2—4% B_2O_3, 6—8% Al_2O_3, 0.5—1.5% F_2O_3, 4—5% ZrO_2, 6—8% CaO, 12—13% Na_2O, and 1.5—2% K_2O. [SM]

ASSOCIATION: none

Card 1/2

APPROVED FOR RELEASE: 03/13/2001 CIA-RDP86-00513R001135910003-8"

"APPROVED FOR RELEASE: 03/13/2001 CIA-RDP86-00513R001135910003-8

KOSTYLEV, V.M.; [illegible]

Heat transfer in a [illegible]
Izv. Akad. Nauk [illegible]

APPROVED FOR RELEASE: 03/13/2001 CIA-RDP86-00513R001135910003-8"

"APPROVED FOR RELEASE: 03/13/2001 CIA-RDP86-00513R001135910003-8

S/070/62/007/004/006/016
E132/E435

AUTHORS: Belyayev, L.M., Nabatov, V.V., Martyshev, Yu.N.

TITLE: The time of illumination in the processes of tribo- and crystallo-luminescence

PERIODICAL: Kristallografiya, v.7, no.4, 1962, 576-580

TEXT: Tribo-luminescence is the excitement of light from a crystal by mechanical means and crystallo-luminescence is the production of light during the crystallization of a salt. Specimens of the alkali halides LiF, NaCl, KCl, CsI, KI(Tl) in the form of prisms, 3 x 3 x 6 mm, were examined in an adapted apparatus for measuring the mechanical properties of small crystals. It was evacuated and two photomultipliers were used to record the emission of light from the crystal on mechanical deformation. The photomultiplier and extensometer records were exhibited simultaneously on an oscillograph and were photographed. It was concluded from this preliminary study that in tribo-luminescence it is essential to describe the character, especially the speed of the mechanical deformation, which the crystal undergoes. The fraction of photoluminescence in tribo-luminescence is small

Card 1/2

APPROVED FOR RELEASE: 03/13/2001 CIA-RDP86-00513R001135910003-8"

"APPROVED FOR RELEASE: 03/13/2001 CIA-RDP86-00513R001135910003-8

S/070/62/007/004/006/016
E132/E435

The time of illumination ...

(if it exists at all). An electric discharge is produced on breaking a crystal and an electromagnetic pulse (picked up on a small antenna) accompanies the light discharge. Crystallo-luminescence, observed in the crystallization of barium chlorate and glaserite is due to the tribo-luminescence of these crystals in the solution. There are 4 figures.

ASSOCIATION: Institut kristallografii AN SSSR
(Institute of Crystallography AS USSR)

SUBMITTED: September 21, 1961

Card 2/2

APPROVED FOR RELEASE: 03/13/2001 CIA-RDP86-00513R001135910003-8"

"APPROVED FOR RELEASE: 03/13/2001 CIA-RDP86-00513R001135910003-8

ACCESSION NR: AT4016304 S/0000/62/000/000/0179/0182

AUTHOR: Belyayev, L.M.; Marty*shev, Yu. N.; Nabatov, V.V

TITLE: Investigation of luminescence during crystal fracturing. Duration of luminescence

SOURCE: Vses. soveshch. po fiz. shchelochnogaloidn. kristallov. 2d, Riga, 1961. Trudy*. Fiz. shchelochnogaloidn kristallov (Physics of alkali halide crystals). Riga, 1962, 179-182

TOPIC TAGS: luminescence, crystal fracturing, triboluminescence, luminescence duration, crystallography, alkali halide crystal

ABSTRACT: In an effort to extend the limited knowledge of the phenomenon known as triboluminescence, the authors set up an assembly which permitted 1) uniform deformation of crystal samples at the point of fracture, either at atmospheric pressure or in a vacuum 10^{-5}mn; 2) synchronous recording of the deformation curve and flashes occurring during deformation; 3) counting the total flash number; and 4) determining the shape of the flash pulses and estimating their length. Samples of LiF, NaCl, KCl, CsI and KI-Tl, shaped as 3 • 3 • 6 mm tetragonal prisms, were subjected to monoaxial compression and

Card 1/2

APPROVED FOR RELEASE: 03/13/2001 CIA-RDP86-00513R001135910003-8"

"APPROVED FOR RELEASE: 03/13/2001 CIA-RDP86-00513R001135910003-8

ACCESSION NR: AT4016304

elongation in a dark chamber using a Dubov micromechanical testing device which allows an absolute compression or elongation rate of $1.0 \cdot 10^{-4}$ to $1.5 \cdot 102$ mm/min. The radio-electron pulse recording system, operable at 5-50 mv on a wave front up to 0.06 μsec, consisted essentially of two FEU-29 photomultipliers examining the pulse duration and shape and activating the oscillograph. Deformation curves on which flashes are recorded showed different patterns for different crystals. At a set compression rate of 0.5 mm/min, LiF and CsI were found to produce most numerous flashes, while NaCl and KI-Tl were generally inactive. "The authors thank K.P. Bondarenko for participating in the assembly design and V.P. Panova and G.G. Bendrikova for participating in the experiments." Orig. art. has: 3 figures.

ASSOCIATION: Institut kristallografii AN SSSR (Institute of Crystallography AN SSSR)

SUBMITTED: 00 DATE ACQ: 06Mar64 ENCL: 00

SUB CODE: PH NO REF SOV: 004 OTHER: 001

Card 2/2

APPROVED FOR RELEASE: 03/13/2001 CIA-RDP86-00513R001135910003-8"

"APPROVED FOR RELEASE: 03/13/2001 CIA-RDP86-00513R001135910003-8

BELYAYEV, L.M.; NABATOV, V.V.

Irregular triboluminescence in lithium fluoride crystals. Kristallografiia 8 no.6:927-928 N-D'63. (MIRA 17:2)

1. Institut kristallografii AN SSSR.

APPROVED FOR RELEASE: 03/13/2001 CIA-RDP86-00513R001135910003-8"

"APPROVED FOR RELEASE: 03/13/2001 CIA-RDP86-00513R001135910003-8

L 1774-66 EWA(k)/FBD/EWT(1)/EWP(e)/EWT(m)/EPF(c)/EEC(k)-2/EWP(i)/T/EWP(t)/EWP(k) EWP(b)/EWA(h)/EWA(m)-2 IJP(c) WG/JD/JW/JG/WH

ACCESSION NR: AP5024570 UR/0070/65/010/005/0767/0769
548.0:535.378

AUTHOR: Belyayev, L. M.; Nabatov, V. V.; Pisarevskiy, Yu. V.; Shaldin, Yu. V.

TITLE: Laser-induced triboluminescence in LiF crystals

SOURCE: Kristallografiya, v. 10, no. 5, 1965, 767-769, and bottom half of insert facing p. 743

TOPIC TAGS: triboluminescence, laser beam, lithium fluoride, ruby laser

ABSTRACT: The disintegration of solid materials by intense light beams is reported. To demonstrate this, a ruby laser beam (λ = 6943 Å), focused by a lens with f = 40 mm on the center of an LiF crystal (average size 12.5 x 8.5 x 7.0 mm) with known triboluminescence properties, was used. The laser-induced triboluminescence was observed in LiF as one (filtered) line (λ = 3470 Å) by means of an FEU-42 photomultiplier. The laser- and tribo-pulses were registered on a DESO-1 oscillograph. A laser beam with a maximum density of 1.5 Mw/cm^2 concentrated on the crystal center caused a luminescence without disintegration, which was attributed to the heating of material at the lens focus. Crystal disintegration and the attendant triboluminescence were observed either after repeated bombardments by

Card 1/2

APPROVED FOR RELEASE: 03/13/2001 CIA-RDP86-00513R001135910003-8"

"APPROVED FOR RELEASE: 03/13/2001 CIA-RDP86-00513R001135910003-8

L 1774-66

ACCESSION NR: AP5024570

laser beams with a maximum density of 1.5 Mw/cm^2, or at higher densities. Although no surface cracks were observed at beam densities below 1.5 Mw/cm^2, their appearance at the subsurface in the form of "rosettes" was evidenced. The experiments showed that the intensity of triboluminescence was approximately two orders of magnitude greater than the luminescence due to heating at λ = 3470 Å. It was concluded that the occurrence of triboluminescence generated during the formation of internal cracks is independent of ambient pressure and is determined solely by the processes in the crystal and at its new surfaces. Further studies will be made to determine whether triboluminescence is due to the luminescence of excited atoms or discharge luminescence stimulated by the electron or to ion emission from new surfaces. Orig. art. has: 4 figures. [YK]

ASSOCIATION: Institut kristallografii AN SSSR (Institute of Crystallography, AN SSSR) 44,55

SUBMITTED: 24Feb65 ENCL: 00 SUB CODE: EC, SS

NO REF SOV: 003 OTHER: 001 ATD PRESS: 4111

Card 2/2

APPROVED FOR RELEASE: 03/13/2001 CIA-RDP86-00513R001135910003-8"

"APPROVED FOR RELEASE: 03/13/2001 CIA-RDP86-00513R001135910003-8

L 23697-66 EWT(1)/EWT(m)/EWP(w)/T/EWP(t) IJP(c) JD/JG/GG

ACC NR: AR6005221 SOURCE CODE: UR/0058/65/000/009/E074/E074

51
B

AUTHOR: Belyayev, L. M.; Nabatov, V. V.; Martyshev, Yu. N.; Bendrikova, G. G.

TITLE: On electric phenomena accompanying the deformation of alkali-halide crystals

SOURCE: Ref. zh. Fizika, Abs. 9E627

REF SOURCE: Sb. Proboy dielektrikov i poluprovodnikov. M.-L., Energiya, 1964, 343-346

TOPIC TAGS: alkali halide, crystal deformation, luminescence, crystal defect, glow discharge, electric property

TRANSLATION: Experiments are described on the study of the electric phenomena which occur during the destruction of certain alkali-halide crystals (LiF, CsI). A special setup was used to register the light pulses produced in a crystal while it is being damaged in compression. Simultaneously with the flash, an electromagnetic pulse was produced, received by an antenna located near the deformed crystal. The hypothesis is advanced that the glow is due to the breakdown in the crystal as it is damaged. The glow was investigated in connection with the formation of cracks. It is shown that it has low intensity, is irregular, and occurs in a few special sections of the crystal cracks. The shape of the observed pulses varies greatly, and the variation in the glow intensity has no regular characteristic at all. V. Sarafanov.

SUB CODE: 20

Card 1/1

APPROVED FOR RELEASE: 03/13/2001 CIA-RDP86-00513R001135910003-8"

"APPROVED FOR RELEASE: 03/13/2001 CIA-RDP86-00513R001135910003-8

ACC NR: AR6010500 SOURCE CODE: UR/0196/65/000/010/B006/B006

AUTHOR: Belyayev, L. M.; Nabatov, V. V.; Martyshev, Yu. N.; Bendrikova, G. G.

TITLE: The electrical phenomena accompanying the deformation of alkali halide crystals

SOURCE: Ref. zh. Elektrotekhnika i energetika, Abs. 10B37

REF SOURCE: Sb. Proboy dielektrikov i poluprovodnikov. M.-L., Energiya, 1964, 343-346

TOPIC TAGS: alkali halide, crystal deformation, electric phenomenon

ABSTRACT: An attempt is made, on the basis of experimental data, to characterize the electrical phenomena occurring during the disintegration of LiF and CsI crystals. [Translation of abstract] 1 illustration and bibliography of 14 titles. [Institute of Crystallography, AN SSSR, Moscow (In-t kristallografii AN SSSR)]

SUB CODE: 20

Card 1/1 UDC: 548.0:537

APPROVED FOR RELEASE: 03/13/2001 CIA-RDP86-00513R001135910003-8"

"APPROVED FOR RELEASE: 03/13/2001 CIA-RDP86-00513R001135910003-8

NABATOVA, G.A.

NABATOVA, G.A.--"Investigation of the Strength of Cyanided Steel for Automobile Gears." *(Dissertations For Degrees In Science And Engineering At USSR, Higher Educational Institutions). (34). Min Automobiles, Tractors, and Agriculture Machine Building USSR, State Union Order of Labor Red Banner Sci Res Automobile and Automobile Engine Inst NAMI, Moscow, 1955.

SO: Knizhnaya Letopis', No. 34, 20 August 1955

* For the degree of Doctor of Technical Science

APPROVED FOR RELEASE: 03/13/2001 CIA-RDP86-00513R001135910003-8"

"APPROVED FOR RELEASE: 03/13/2001 CIA-RDP86-00513R001135910003-8

L 40954-66 EWT(m)/EWP(k)/T/EWP(v)/EWP(t)/ETI IJP(c) JH/JD/GM/WR

ACC NR: AT6024921 SOURCE CODE: UR/2981/66/000/004/0120/0134

AUTHOR: Fridlyander, I. N. (Doctor of technical sciences); Kuznetsova, Ye. A.; Davydova, N. A.; Bubenshchikov, V. S.; Nabatova, I. A.

41
47

ORG: none

TITLE: Delayed failure of Al-Zn-Mg alloy welds

SOURCE: Alyuminiyevyye splavy, no. 4, 1966. Zharoprochnyye i vysokoprochnyye splavy (Heat-resistant and high-strength alloys), 120-134

TOPIC TAGS: aluminum alloy, high strength alloy, metal weld, weld failure, mechanical failure, ~~delayed failure~~, ~~metal failure~~, metal property, zinc containing alloy, manganese containing alloy/~~ATsM aluminum alloy~~, ATsMU aluminum alloy

ABSTRACT: The behavior of ATsM and ATsMU alloy welds under stress in air and in argon has been investigated. The respective content of alloying elements in alloys was: zinc 4.5 and 4.3%, magnesium 1.2 and 1.5%, manganese 0.6 and 0.3%, and copper 0.75 and 0.1%. The contents of zirconium (0.17%), iron (0.3%), and silicon (0.2%) were the same in both alloys. The welds were made with AMg6 and AMg4 alloy filler wire. The specimens were stressed (below the yield strength) by bending in a special device. It was found that the duration and temperature of aging affects the susceptibility to delayed failure, especially in ATsM alloy welds. Specimens of this alloy aged at 20C or at 90C were not susceptible to delayed failure, while specimens aged

Card 1/2

APPROVED FOR RELEASE: 03/13/2001 CIA-RDP86-00513R001135910003-8"

"APPROVED FOR RELEASE: 03/13/2001 CIA-RDP86-00513R001135910003-8

L 40954-66

ACC NR: AT6024921

at 100 (100 hr) or 120 (10 hr) and 175 (1 hr) were very susceptible. The susceptibility of ATsM was also affected by the filler wire. The specimens welded with AMg6 alloy filler wire were less susceptible to delayed failure than those welded with AMg4 alloy wire. The susceptibility of ATsMU alloy was lower than that of ATsM alloy and failure was observed only on the specimens welded with AMg4 filler wire and aged at 120C for 10 hr + at 175 for 1 hr. Specimens of ATsM and ATsMU alloys tested in argon remained intact for 50-60 days. Even when removed from argon and left under stress in air, no cracking occurred within 90 days. It appears that the delayed failure of ATsM and ATsMU alloy welds is a result of stress corrosion under the effect of air mositure. The optimum aging conditions for both alloys were 90C for 100 hr. Orig. art. has: 6 figures and 9 tables. [TD]

SUB CODE: 11, 13/ SUBM DATE: none/ ORIG REF: 001/ OTH REF: 006/ ATD PRESS: 5656

Card 2/2 hs

APPROVED FOR RELEASE: 03/13/2001 CIA-RDP86-00513R001135910003-8"

"APPROVED FOR RELEASE: 03/13/2001 CIA-RDP86-00513R001135910003-8

L 04197-67 EWT(m)/EWP(w)/T/EWP(t)/ETI/EWP(k) IJP(c) JD/WW/AT/JW

ACC NR: AP6028585 SOURCE CODE: UR/0129/66/000/008/0020/0024

AUTHOR: Kuznetsova, Ye. A.; Bubensh chikov, V. S.; Davydova, N. A.; Nabatova, I. A.

ORG: none

TITLE: The influence of aging on delayed fracture of welded parts made from alloys of the Al-Zn-Mg system

SOURCE: Metallovedeniye i termicheskaya obrabotka metallov, no. 8, 1966, 20-24

TOPIC TAGS: aluminum alloy, welding cracking, mechanical property, bending, fractography, argon, heat treatment, precipitation hardening

ABSTRACT: The effect of aging on delayed fracture was studied in welded Al-Zn-Mg alloys. Two alloys were investigated: alloy No. 1--4.5% Zn, 1.8% Mg, 0.6% Mn, and 0.05% Cu; alloy No. 2--4.3% Zn, 1.5% Mg, 0.3% Mn, and 0.1% Cu. Welded pieces were tested under cantilever bending in air and argon at room temperature. Two different welding rods made of AMg6 (6.3% Mg, 0.65% Mn) and AMg4 (4.4% Mg, 0.65% Mn) were used. Mechanical properties were given for various aging treatments. The percentage of samples fractured in air, given as a function of cantilever end displacement, initially increased sharply, but dropped when plastic deformation occurred due to elastic stress relaxation. At small displacements (1.8-1.9 mm), corresponding to 0.6 $\sigma_{0.2}$, the average time to fracture was 60-65 days. Alloy 1 had a greater tendency toward delayed

UDC: 669.715'72:621.79

Card 1/2

APPROVED FOR RELEASE: 03/13/2001 CIA-RDP86-00513R001135910003-8"

"APPROVED FOR RELEASE: 03/13/2001 CIA-RDP86-00513R001135910003-8

L 04197-67

ACC NR: AP6028585

fracture, since in alloy 2 the tendency was only exhibited after step aging and only after using the AMg4 welding rod. For both alloys, the relative number of artificially aged samples that fractured in a period of ten years was given as a function of fracture time. The early fractures (70 days or less) were caused by welding cracks which under stress initiated fracturing. After aging 100 hr at 90°C, the cracks could not propagate readily due to the higher plasticity. Similar tests, done in an argon filled chamber, showed no cracking after 50-60 days even for the severest aging conditions found in atmospheric tests. Correlations with creep studies confirmed that corrosion cracking in alloy No. 1 can only occur for aging at 100°C, 100 hr or at 120°C, 10 hr + 175°C, 1 hr. Microstructures showed that cracking generally occurred in the heat affected zone along grain boundaries. Orig. art. has: 6 figures, 2 tables.

SUB CODE: 11,13/ SUBM DATE: none

Card 2/2

APPROVED FOR RELEASE: 03/13/2001 CIA-RDP86-00513R001135910003-8"

"APPROVED FOR RELEASE: 03/13/2001 CIA-RDP86-00513R001135910003-8

NABATOVA, K. A.

PA 3/49T17

USSR/Chemistry - Laboratories, Industrial Aug 48
Chemistry - Analysis

"Progressive Norms in Analytical Work," K. A. Nabatova, Supervisor, Cen Lab, D. V. Bashkirov, Supervisor, Chem Lab, Factory of Small Capacity Automobiles, 1 p

"Zavod Lab" Vol XIV, No 8

Lab employs seven analysts--five ferrous and two nonferrous. Table shows methods used for various determinations, time taken and number of analyses completed per month.

3/49T17

APPROVED FOR RELEASE: 03/13/2001 CIA-RDP86-00513R001135910003-8"

"APPROVED FOR RELEASE: 03/13/2001 CIA-RDP86-00513R001135910003-8

NABATOVA, K.A.; DYMSHITS, I.I.; DUBOV, A.F.; VINOGRADOVA, V.P.

Shot peening the transmission gears of the Moskvich automobile. Avt. i trakt. prom. no.6:29-31 J3 '56. (MLRA 9:9)

1. Nauchno-issledovatel'skiy avtomotornyy institut i Moskovskiy zavod malolitrazhnykh avtomobiley.
(Automobiles--Transmission devices) (Shot peening)

APPROVED FOR RELEASE: 03/13/2001 CIA-RDP86-00513R001135910003-8"

"APPROVED FOR RELEASE: 03/13/2001 CIA-RDP86-00513R001135910003-8

GURCHENKO, Z.K.; VALOVICH, A.A.; KABATOVA, L.N.; PETIKOVA, N.P.

[Mechanization of canned milk plants] Mekhanizatsiia molochno-konservnykh zavodov. Moskva, Tsentr. in-t nauchno-tekhn. informatsii pishchevoi promyshl., 1963. 77 p. (MIRA 17:8)

APPROVED FOR RELEASE: 03/13/2001 CIA-RDP86-00513R001135910003-8"

"APPROVED FOR RELEASE: 03/13/2001 CIA-RDP86-00513R001135910003-8

A AHATOVA, L. V.

S/070/60/005/03/005/008
E132/E360

AUTHORS: Maslov, V.N. and Nabatova, L.V.

TITLE: High-temperature Gas Etching of Single Crystals of Germanium

PERIODICAL: Kristallografiya, 1960, Vol. 5, No. 3, pp. 470-472

TEXT: The method of etching by a gaseous reagent, such as Cl_2 H_2 or HCl, is widely used in metallography and it was of interest to see whether high-temperature etching with such reagents would show up dislocations in germanium. Cl_2 and Br_2 were used here. The Cl_2 was dry and free from O_2 to preserve the bright surface of the Ge specimen. At 450 °C a dark-grey bloom was formed on the surface, which was almost insoluble in acids and alkalis in the cold. In the 500-700 °C range the layer was covered by a crust which was shown to be GeO_2. Br_2 gave the same effects but in a less pronounced form. Cl_2 was passed over the specimen in a muffle at 10 cm H_2O pressure at 1 - 5 cm^3/min for 1-10 minutes. The 111

Card1/2

APPROVED FOR RELEASE: 03/13/2001 CIA-RDP86-00513R001135910003-8"

"APPROVED FOR RELEASE: 03/13/2001 CIA-RDP86-00513R001135910003-8

S/070/60/005/03/005/008
E132/E360

High-temperature Gas Etching of Single Crystals of Germanium

face of n-type Ge was subjected to this treatment after chemical polishing. A graph is given of the time required to etch to 0.005 mm at various temperatures. For 7-10 min at 200 - 300 °C triangular pyramids were formed. Hexagons appeared at 400 - 500°. The etch figures were not uniform over the whole surface. Very small circular pits were also observed. Gas etching shows not only the places where dislocations emerge but also other surface defects (residues of the deformed layer after polishing with abrasive, traces of scratches, etc). Very high quality polishing is needed if these reagents are to disclose only dislocations.
There are 5 figures and 4 references: 3 Soviet and 1 English.

ASSOCIATION: Gosudarstvennyy nauchno-issledovatel'skiy i proyektnyy institut redkometallicheskoy promyshlennosti (State Scientific Research and Planning Institute of the Rare Metals Industry)

SUBMITTED: January 5, 1960

Card 2/2

APPROVED FOR RELEASE: 03/13/2001 CIA-RDP86-00513R001135910003-8"

"APPROVED FOR RELEASE: 03/13/2001 CIA-RDP86-00513R001135910003-8

S/070/62/007/002/010/022
E132/E160

24,7100

AUTHORS: Maslov, V.N., Ovodova, A.V., and Nabatova, L.V.

TITLE: The study of monocrystals of n-type germanium by the method of anodic etching

PERIODICAL: Kristallografiya, v.7, no.2, 1962, 271-275

TEXT: It is shown that anodic etching can be used for the comparative estimation of the quality of single crystals of n-type germanium from the degree of uniformity of the large and small scale distribution of impurities. A point of anodic etching corresponds to a place of local breakdown with lowering of the specific resistance. Crystals with a specific resistance of 2-30 ohm.cm were used with 0.1 M Na_2SO_4 as the electrolyte. Other electrolytes were tried, $MgSO_4$ being the most successful. Saturation current conditions were used. Anodic etching was compared with chemical etching by $K_3Fe(CN)_6$. It was expected that etching would correspond either to spots of lowered specific resistance where electrolytic breakdown is most probable, or to places with increased concentrations of acceptor impurities.

Card 1/2

APPROVED FOR RELEASE: 03/13/2001 CIA-RDP86-00513R001135910003-8"

"APPROVED FOR RELEASE: 03/13/2001 CIA-RDP86-00513R001135910003-8

The study of monocrystals of n-type .. S/070/62/007/002/010/022
E132/E160

There are 9 figures.

ASSOCIATION: Gosudarstvennyy nauchno-issledovatel'skiy i proyektnyy institut redkometallicheskoy promyshlennosti (State Scientific Research and Design Institute of the Rare Metals Industry)

SUBMITTED: December 12, 1960

Card 2/2

APPROVED FOR RELEASE: 03/13/2001 CIA-RDP86-00513R001135910003-8"

"APPROVED FOR RELEASE: 03/13/2001 CIA-RDP86-00513R001135910003-8

MASLOV, V.N.; OVODOVA, A.V.; KORCHAZHKINA, R.L.; NABATOVA, L.V.

Observation of dislocation structures when etching heavily doped germanium. Kristallografiia 9 no.4:568-569 Jl-Ag '64. (MIRA 17:11)

1. Gosudarstvennyy nauchno-issledovatel'skiy i proyektnyy institut redkometallicheskiy promyshlennosti.

APPROVED FOR RELEASE: 03/13/2001 CIA-RDP86-00513R001135910003-8"

"APPROVED FOR RELEASE: 03/13/2001 CIA-RDP86-00513R001135910003-8

S/070/62/007/003/026/026
E132/E460

AUTHORS: Maslov, V.N., Sokolov, Ye.B., Nabatova, L.V.

TITLE: Fractographic investigation of single crystals of germanium

PERIODICAL: Kristallografiya, v.7, no.3, 1962, 477-479

TEXT: Fractography is the examination of the formerly internal surfaces after a specimen has been broken. Quantitative measurements are, however, difficult. For semiconducting metals the character of the break depends on many factors, such as purity, temperature and rate of stressing. The usual plane of perfect cleavage in Ge is 111 and under suitable conditions mirror smooth surfaces can be obtained. There are often microsteps on the surface radiating in a fan from the point where the blow was struck. Examination of the cleavage surface can give information on the distribution of strains in the crystal. 15 Crystals of Ge grown under different regimes were studied. The twin structure and the presence of cracks, inclusions and internal strains were revealed. Microscopic investigation of the etched surface of the break showed that a large number of point defects and

Card 1/2

APPROVED FOR RELEASE: 03/13/2001 CIA-RDP86-00513R001135910003-8"

"APPROVED FOR RELEASE: 03/13/2001 CIA-RDP86-00513R001135910003-8

Fractographic investigation ... S/070/62/007/003/026/026
E132/E460

dislocation loops were formed on brittle fracture of the single crystals of Ge. There are 5 figures.

ASSOCIATION: Gosudarstvennyy nauchno-issledovatel'skiy i proyektnyy institut redkometallicheskoy promyshlennosti (State Scientific Research and Design Institute for the Rare Metal Industry)

SUBMITTED: September 29, 1961

Card 2/2

APPROVED FOR RELEASE: 03/13/2001 CIA-RDP86-00513R001135910003-8"

"APPROVED FOR RELEASE: 03/13/2001 CIA-RDP86-00513R001135910003-8

MASLOV, V.N.; NABATOVA, L.V.; NALIMOV, V.V.; NYUBERG, I.N.; OVODOVA, A.V.; SLOBODCHIKOVA, R.I.

Presentation of the results of investigation of the structural defects of germanium. Zav. lab. 29 no.10:1206-1211 '63. (MIRA 16:12)

1. Gosudarstvennyy nauchno-issledovatel'skiy i proyektnyy institut redkometallicheskoy promyshlennosti.

APPROVED FOR RELEASE: 03/13/2001 CIA-RDP86-00513R001135910003-8"

"APPROVED FOR RELEASE: 03/13/2001 CIA-RDP86-00513R001135910003-8

ACCESSION NR: AT4040556 S/2564/64/004/000/0113/0116

AUTHOR: Maslov, V. N.; Davy*dov, A. A.; Demenkov, N. M.; Nabatova, L. V.

TITLE: The twin structure of germanium dendritic bands

SOURCE: AN SSSR. Institut kristallografii. Rost kristallov, v. 4, 1964, 113-116

TOPIC TAGS: germanium, germanium monocrystal, germanium band, dendritic band, germanium dendritic band, germanium dendrite, germanium dendrite structure, germanium crystallization

ABSTRACT: This study was conducted to determine the characteristics of the optimum twin structure of germanium dendrites which would facilitate the preparation of uniform bands of considerable length. Dendrite bands 4 - 5 meters in length were grown at a rate of 80-100 mm/min from a melt brought to a temperature 10-13C below the melting point. The twin structure of the dendrite cross section was examined fractographically and microscopically. Additional etching by an alkaline etcher with potassium ferricyanide permitted comparison of the dislocation etching holes on the ⟨112⟩ plane with peculiarities of the twin structure. Lamellae which were 7 microns thick were found to be most effective. Twin

Card 1/2

APPROVED FOR RELEASE: 03/13/2001 CIA-RDP86-00513R001135910003-8"

"APPROVED FOR RELEASE: 03/13/2001 CIA-RDP86-00513R001135910003-8

ACCESSION NR: AP4012288

S/0070/64/009/001/0125/0126

AUTHORS: Maslov, V. N.; Ovodova, A. V.; Nabatova, L. V.; Bulankin, V. S.

TITLE: Selective surface oxidation of germanium single crystals

SOURCE: Kristallografiya, v. 9, no. 1, 1964, 125-126

TOPIC TAGS: germanium, crystalline germanium, germanium surface oxidation, selective surface oxidation, surface defect, admixture distribution, uneven admixture distribution, oxidation at macrodefects

ABSTRACT: Observations of selective surface oxidation on germanium crystals with surface imperfections and with unevenly distributed inclusions have been conducted. This type of oxidation had been previously observed near scratches and other macrodefects (V. N. Maslov and L. V. Nabatova. Kristallografiya, 5, 3, 470-472, 1960). Surface regions near the dislocation lines are also subject to local oxidation. Germanium specimens alloyed with arsenic exhibit a grayish irridescent film after being polished in a 1:1 mixture of HF and HNO_3 and etched in basic ferrocyanide. This film, however, appears to be missing near the etched pits when

Card 1/2

APPROVED FOR RELEASE: 03/13/2001 CIA-RDP86-00513R001135910003-8"

"APPROVED FOR RELEASE: 03/13/2001 CIA-RDP86-00513R001135910003-8

ACCESSION NR: AP4012288

viewed through a microscope. The oxidation zones are seen to follow the variations in the intensity of electrical potential on the surface, and both phenomena may be explained as being related to the concentrations of arsenic at the dislocations. For the same reason no oxidation is found near the twinning lines which act similarly to the dislocation concentrations. The relation of selective oxidation to the distribution of admixtures is confirmed by the observation of crystals with traces of layered growth. Here the oxidized zones have a banded appearance caused by the layered concentration of arsenic inclusions. In the case of antimony inclusions in germanium, the zones of oxidation assume a spotty distribution of unexplained origin. Orig. art. has: 5 photographs.

ASSOCIATION: Gosudarstvenny*y nauchno-issledovatel'skiy i proyektny*y institut redkometallicheskoy prosy*shlennosti (State Scientific Research and Design Institute of Rare Metals Industry)

SUBMITTED: 05Mar63 DATE ACQ: 19Feb64 ENCL: 00

SUB CODE: PH, ML NO REF SOV: 001 OTHER: 003

Card 2/2

APPROVED FOR RELEASE: 03/13/2001 CIA-RDP86-00513R001135910003-8"

"APPROVED FOR RELEASE: 03/13/2001 CIA-RDP86-00513R001135910003-8

ACCESSION NR: AP4043195 S/0070/64/009/004/0568/0569

AUTHOR: Maslov, V. N.; Ovodova, A. V.; Korchazhkina, R. L.; Nabatova, L. V.

TITLE: Dislocation structure observed on etching highly doped germanium

SOURCE: Kristallografiya, v. 9, no. 4, 1964, 568-569

TOPIC TAGS: germanium single crystal, arsenic doped germanium, gallium doped germanium, dislocation detection, chemical etching, impurity precipitation

ABSTRACT: The precipitation of impurities on dislocations was studied by chemical etching of the polished sections of arsenic- or gallium-doped germanium single crystals. The dopant concentration was near the limit of its solubility. Crystals were grown by the Czochralski method. As expected, various dislocation patterns were revealed by etch pits near the surface of specimens. Dislocation loops were more pronounced on arsenic-doped than on gallium-doped specimens. This observation is in agreement with the earlier

Card 1/2

APPROVED FOR RELEASE: 03/13/2001 CIA-RDP86-00513R001135910003-8"

"APPROVED FOR RELEASE: 03/13/2001 CIA-RDP86-00513R001135910003-8

ACCESSION NR: AP4043195

conclusion that condensed vacancies are the source of dislocations in highly doped crystals. Orig. art. has: 3 figures.

ASSOCIATION: Gosudarstvenny*y nauchno-issledovatel'skiy i proyektny*y institut redkometallicheskoy promy*shlennosti (State Scientific Research and Design Institute of the Rare metals Industry)

SUBMITTED: 07Feb63

ENCL: 00

SUB CODE: SS

NO REF SOV: 000

OTHER: 008

Card 2/2

APPROVED FOR RELEASE: 03/13/2001 CIA-RDP86-00513R001135910003-8"

"APPROVED FOR RELEASE: 03/13/2001 CIA-RDP86-00513R001135910003-8

ACCESSION NR: AP4020042 S/0032/64/030/003/0295/0297

AUTHORS: Maslov, V. N.; Ovodova, A. V.; Nabatova, L. V.

TITLE: Dislocation density control in germanium

SOURCE: Zavodskaya laboratoriya, v. 30, no. 3, 1964, 295-297

TOPIC TAGS: dislocation density, error statistics, dispersion relation, hole

ABSTRACT: The authors review the various methods used for calculating dislocation densities by various industries and institutions (including "Sylvania Electric Products" and "Semimetals"). They find a lack of a uniform system of estimating these densities, so they propose an expression for error calculation given by

$$p = \frac{s \cdot 100}{\mu \sqrt{n}}, \%$$

where s - is the mean square departure from a single measurement of number of etching holes μ in the field of view of the microscope. The dispersion relation s is determined experimentally by fitting a straight line curve through the experimental points on a log-log sheet. This yields

$$s^2_{max} = 8{,}0\bar{n}.$$

Card 1/2

APPROVED FOR RELEASE: 03/13/2001 CIA-RDP86-00513R001135910003-8"

"APPROVED FOR RELEASE: 03/13/2001 CIA-RDP86-00513R001135910003-8

ACCESSION NR: AP4020042

where $\bar{\mu}$ - arithmetic mean of number of holes in a single field of view. The resulting expression for p gives a mininum value for the number of etching holes to be counted (784-800) for an expected error of 5-10%. Orig. art. has: 7 formulas and 1 figure.

ASSOCIATION: Gosudarstvenny*y nauchno-issledovatel'skiy i proyektny*y institut redkometallicheskoy promy*shlennosti (State Scientific Research and Project Institute of Rare Earth Industries)

SUBMITTED: 00 DATE ACQ: 27Mar64 ENCL: 00

SUB CODE: GP, SS NO REF SOV: 002 OTHER: 003

Card 2/2

APPROVED FOR RELEASE: 03/13/2001 CIA-RDP86-00513R001135910003-8"

"APPROVED FOR RELEASE: 03/13/2001 CIA-RDP86-00513R001135910003-8

MASLOV, V.N.; DAVYDOV, A.A.; DEMENKOV, N.M.; NABATOVA, L.V.

Twin structure of germanium dendritic bands. Rost krist. 4: 113-116 '64. (MIRA 17:8)

APPROVED FOR RELEASE: 03/13/2001 CIA-RDP86-00513R001135910003-8"

"APPROVED FOR RELEASE: 03/13/2001 CIA-RDP86-00513R001135910003-8

YUSHINA, V., plotnik; NABATOVA, P., plotnik

Gauge for erecting trusses. Na stroi.Mosk. 1 no.9:29 S '58.
(MIRA 11:12)

(Trusses)

APPROVED FOR RELEASE: 03/13/2001 CIA-RDP86-00513R001135910003-8"

"APPROVED FOR RELEASE: 03/13/2001 CIA-RDP86-00513R001135910003-8

BLOSHTEYN, Ye.A.; NABATOVA, R.Ye.

Working with newspaper and magazine clippings in the Scientific Research Institute. NTI no.10:11-14 '63.
(MIRA 17:1)

APPROVED FOR RELEASE: 03/13/2001 CIA-RDP86-00513R001135910003-8"

"APPROVED FOR RELEASE: 03/13/2001 CIA-RDP86-00513R001135910003-8

BERLINER, B.I., professor; NABATOVA, Z.N., ml. nauchn. sotr.

Industrial accidents and traumatological aid in cotton gins in Uzbekistan. Ortop.travm. i protez. no.4:41-44 Jl-Ag '55. (MLRA 8:10)

1. Iz nauchno-issledovatel'skogo instituta ortopedii, travmatologii i protezirovaniya Ministerstva zdravookhraneniya UzSSR(dir.-kandidat med. nauk A. Sh. Shakirov)

(WOUNDS AND INJURIES,
in cotton mill workers)
(OCCUPATIONAL DISEASES,
inj. in cotton mill workers)

APPROVED FOR RELEASE: 03/13/2001 CIA-RDP86-00513R001135910003-8"

"APPROVED FOR RELEASE: 03/13/2001 CIA-RDP86-00513R001135910003-8

VOLKOV, S.P., inzh.; KOLPIKOV, N.V., inzh.; NABATYAN, M.P., inzh.

Performance of double-disk furrow openers at increased speeds. Mekh. i elek. sots. sel'khoz. 19 no.6:7-9 '61. (MIRA 14:12)

1. Vsesoyuznyy nauchno-issledovatel'skiy institut mekhanizatsii sel'skogo khozyaystva.
(Drill (Agricultural implement))

APPROVED FOR RELEASE: 03/13/2001 CIA-RDP86-00513R001135910003-8"

"APPROVED FOR RELEASE: 03/13/2001 CIA-RDP86-00513R001135910003-8

KRYL'SKIY, V.Yu., inzh.; NABEBRIK, L.Yu., inzh.

Expenditure of electric power in synthetic rub[illegible]. [illegible] energ. 19 no.5:[illegible] My '64. [illegible]

APPROVED FOR RELEASE: 03/13/2001 CIA-RDP86-00513R001135910003-8"

"APPROVED FOR RELEASE: 03/13/2001 CIA-RDP86-00513R001135910003-8

NABEDRIK, L.Yu., inzh.

Consideration of growing electrical loads in planning the electric power supply of synthetic rubber plants. Prom. energ. 18 no.11:43-44 N '63. (MIRA 16:12)

APPROVED FOR RELEASE: 03/13/2001 CIA-RDP86-00513R001135910003-8"

"APPROVED FOR RELEASE: 03/13/2001 CIA-RDP86-00513R001135910003-8

NAPLEK, R.

"Correcting optical systems by differential transient coefficients."

JEMNA MECHANIKA A OPTIKA, Praha, Czechoslovakia, Vol. 4, No. 4, April 1959.

Monthly List of East European Accessions (EEAI), LC, Vol. 8, No. 9, September 1959.

Unclassified.

APPROVED FOR RELEASE: 03/13/2001 CIA-RDP86-00513R001135910003-8"

"APPROVED FOR RELEASE: 03/13/2001 CIA-RDP86-00513R001135910003-8

6.3000 (2105, 2605, 1051, 1106)
6.4780
9.5300

21376

Z/026/60/005/003/005/005
D221/D302

AUTHOR: Nábělek, Bohumil

TITLE: Differential transient coefficients and their application in correcting optical systems. Part I

PERIODICAL: Aplikace matematiky, v. 5, no. 3, 1960, 225-236

TEXT: This paper is a practical demonstration based on F.D. Cruickshank's system, reducing calculations to a quarter of the time required by the trigonometric method. The principle of this system is in examining the effect of the constructional parameter on quantities of the pictorial space for computing and tabulating the aberrational coefficients. The purpose of the paper is said to make optical designers familiar with modern correctional methods in swift calculations without their having much previous experience. After elucidating the nomenclature and basic identities of trigonometric values and coefficients -- according to conventional

Card 1/5

APPROVED FOR RELEASE: 03/13/2001 CIA-RDP86-00513R001135910003-8"

"APPROVED FOR RELEASE: 03/13/2001 CIA-RDP86-00513R001135910003-8

21376
Z/026/60/005/003/005/005
D221/D302

Differential transient ...

denotations which can be found in B. Havelka (Ref. 3: Geometrická optika (Optical Geometry) I., II.) -- the transient coefficients for variable intersectional distances are investigated at changing constructional parameters. The track of the ray (Fig. 6) past the last position before and after the occurrence of change is PM and P'M' respectively.

Fig. 6

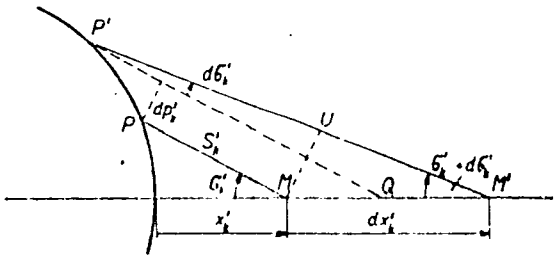

Obr. 6. FIG. 6

Card 2/5

APPROVED FOR RELEASE: 03/13/2001 CIA-RDP86-00513R001135910003-8"

"APPROVED FOR RELEASE: 03/13/2001 CIA-RDP86-00513R001135910003-8

21376

Differential transient ... Z/026/60/005/003/005/005
D221/D302

The change of track is brought about by the transposition of the point of emission and by the change of direction. At the transposition of dp, M shifts to Q, and then further to M' by a change of d[illegible]. The variation of the intersectional distance is given by

(26) $$dx'_k = MM' = \frac{dp'_k}{\sin\sigma'_k} - S'_k \frac{d\sigma'_k}{\sin\sigma'_k}.$$ (26)

so that the effect of the transposition can be expressed as

(28) $$\frac{\partial x'_k}{\partial p_i} = \left(\frac{\partial p'_k}{\partial p_i} - S'_k \frac{\partial \sigma'_k}{\partial p_i}\right) \frac{1}{\sin\sigma'_k}.$$ (28)

and the effect of the change of direction as

(27) $$\frac{\partial x'_k}{\partial \sigma'_i} = \left(\frac{\partial p'_k}{\partial \sigma'_i} - S'_k \frac{\partial \sigma'_k}{\partial \sigma'_i}\right) \frac{1}{\sin\sigma'_k}.$$ (27)

This variation for a paraxial ray can be evolved from Eq. (27) in

Card 3/5

APPROVED FOR RELEASE: 03/13/2001 CIA-RDP86-00513R001135910003-8"

"APPROVED FOR RELEASE: 03/13/2001 CIA-RDP86-00513R001135910003-8

the form of

$$\frac{\partial x'_k}{\partial c_i} = \left(\frac{\partial h_k}{\partial \sigma'_i} - x'_k \frac{\partial \sigma'_k}{\partial \sigma_i}\right) \frac{1}{\sigma'_k} \frac{\partial \sigma'_i}{\partial c_i}. \tag{52}$$

where the curvatures c are reciprocals of the radii of refractional spheres. To demonstrate [Abstractor's note: Among others] the effect of changing constructional parameters, such as, for instance, curvature, after the refraction on the i-th surface the ray will deviate from its original direction by

$$d\sigma'_i = \left(\frac{\partial \sigma'_i}{\partial c_i}\right) dc_i, \tag{29}$$

which with the aid of Eq. (27) will produce

$$\frac{\partial x'_k}{\partial c_i} = \frac{\partial x'_k}{\partial \sigma'_i} \frac{\partial \sigma'_i}{\partial c_i} = \frac{\partial \sigma'_i}{\partial c_i} C(\sigma'_i) \frac{1}{\sin \sigma'_k}. \tag{30}$$

APPROVED FOR RELEASE: 03/13/2001 CIA-RDP86-00513R001135910003-8"

"APPROVED FOR RELEASE: 03/13/2001 CIA-RDP86-00513R001135910003-8

21376

Z/026/60/005/003/005/005
D221/D302

Differential transient . .

Furthermore, formulae for the calculation of transient coefficients at varying paraxial focus and at varying apeture error are presented, the variations being related to the change of curvature, thickness and index of refraction. The author concludes by assuring that the results have been tested in practical examples and found to be sufficiently accurate in comparison with the trigonometric method. There are 6 figures and 3 references: 2 Soviet-bloc and 1 non-Soviet-bloc. The reference to the English-language publication reads as follows: F.D. Cruickshank and A.L. Aulay: Proc.Phys.Soc. 57, 1945, 302; F.D. Cruickshank: Proc.Phys.Soc.57, 1945, 350, 428; and JOSA 36, 1946, 13.

SUBMITTED: November 12, 1958

Card 5/5

APPROVED FOR RELEASE: 03/13/2001 CIA-RDP86-00513R001135910003-8"

"APPROVED FOR RELEASE: 03/13/2001 CIA-RDP86-00513R001135910003-8

Z/026/60/005/004/002/004
D231/D304

24.3700 (1051,1057,1106)

AUTHOR: Nábělek, Bohumil

TITLE: Differential transition-coefficients, and their use in the correction of optical systems, II

PERIODICAL: Aplikace matematiky, v. 5, no. 4, 1960, 282 - 294

TEXT: The article is a continuation of a previous one by the same author (Aplikace matematiky, v. 5, no. 3, 1960) dealing with the theoretical part of F.D. Cruishank's method for the speedy correction of faults, and deviations from the sine condition. In this part tables, and instructions for the practical calculation are given as well as practical examples. With regard to the calculation forms, for calculating zonal rays, add spaces for $x_i \sin \sigma_i$ and S_i';

where (2,1) $$S_i' = \frac{x_i' - a_i}{\cos \sigma_i'}, \qquad (2.1)$$

Card 1/5

APPROVED FOR RELEASE: 03/13/2001 CIA-RDP86-00513R001135910003-8"

"APPROVED FOR RELEASE: 03/13/2001 CIA-RDP86-00513R001135910003-8

and where (2,2) $$a_i = r_i[1 - \cos(\sigma + \varepsilon)_i]. \quad (2.2)$$

the remaining values are obtained from Eqs. (2), (9), (10), (11), (12), all of which are given in Part I. of this article and

(2,3) $$'d_i = \frac{d_i - a_i + a_{i+1}}{\cos \sigma'_i}. \quad (2.3)$$

These values are given in tabulated form. The symbols used are all defined in Part I. For calculating changes in the distances Eqs. (27) and (28) are used; for solving the right hand sides of these equations rearrange equations (20), (21), (23) and (24) [Abstractor's note: All equations are in Part I of this article]. The calculations of the four basic coefficients are even simpler from Eqs. (46) - (49) [Abstractor's note: Equations given in Part I] and they are given in tabulated form also. The equation for coefficients $\frac{\partial x'_{ok}}{\partial x'_{oi}}$ and $\frac{\partial x'_{ok}}{\partial h_i}$ for the paraxial ray were not given. These can be ob-

APPROVED FOR RELEASE: 03/13/2001 CIA-RDP86-00513R001135910003-8"

"APPROVED FOR RELEASE: 03/13/2001 CIA-RDP86-00513R001135910003-8

tained from Eqs. (52) - (54) [Abstractor's note: Equations in Part I]. The tables further give values for $\frac{\partial \sigma'_{ok}}{\partial a_i}$. To obtain the changes simply multiply the coefficient $\frac{\partial x'_k}{\partial a_i}$ with da_i "the differential of change". This term denotes the growth of parameter a_i. Changes of thickness and changes of fraction-index are directly entered. Only changes of curvature $c(= \frac{1}{r})$ are given in the form:

$$dc_i = \left(- \frac{1}{r_i^2} \right) dr_i. \tag{2.4}$$

In general, any change of dimension V (sine condition, focus, etc.) is shown as:

$$dV = \frac{\partial V}{\partial a_i} da_i. \tag{2.5}$$

APPROVED FOR RELEASE: 03/13/2001 CIA-RDP86-00513R001135910003-8"

"APPROVED FOR RELEASE: 03/13/2001 CIA-RDP86-00513R001135910003-8

A practical example is given by B. Havelka (Ref. 2: Geometrická optika, II, 221). The results were confirmed by trigonometric calculations. In the given case the whole correction only consists of three multiplications and three additions. The author points out that it is possible to rewrite Eq. (62) [Abstractor's note: Equation given in Part I] in the form

$$d(\Delta x') = \left(\frac{\partial x'_{km}}{\partial a_i} - \frac{\partial x'_{ok}}{\partial a_i}\right) da_i . \qquad (2.7)$$

(2,7)

If now a certain value for the aberration is wanted, then

$$\Delta x' + d(\Delta x') = B \qquad (2.9)$$

where B is the wanted aberration. The value in the right side of equation (2.7) can be found in tabulated form. To determine the change in the sine condition the value for $d(\Delta f')$ must be obtained. If $x_1 = \infty$ this deviation is in the form

$$\Delta f' = \frac{h_1}{\sin \sigma'_k} - f'_0 . \qquad (2.10)$$

(2,10)

APPROVED FOR RELEASE: 03/13/2001 CIA-RDP86-00513R001135910003-8"

"APPROVED FOR RELEASE: 03/13/2001 CIA-RDP86-00513R001135910003-8

For the changes depending on coefficient

$$d(\Delta f)' = -\left(f_\sigma \operatorname{cotg} \sigma'_k \frac{\partial \sigma'_k}{\partial a_i} + \frac{\partial f_0}{\partial a_i}\right) da_i . \qquad (2.13)$$

The great advantage of this method is that it is not necessary to recalculate for every change of parameter. To determine the effect of one change, one multiplication only is necessary. It is also possible to determine the change in order to get the wanted correction. The final exact results are calculated trigonometrically. It is essential to select the changes sufficiently small to get accuracy. It is also possible for a designer with limited experience to get good results. The author of the method (Cruikshank) states that the time required for the calculation is reduced to a quarter of the usual. There are 8 tables and 2 Soviet-bloc references.

ASSOCIATION: Laboratoř optiky ČSAV (Optical Laboratory, Czechoslovak AS)

SUBMITTED: December 12, 1958

APPROVED FOR RELEASE: 03/13/2001 CIA-RDP86-00513R001135910003-8"

"APPROVED FOR RELEASE: 03/13/2001 CIA-RDP86-00513R001135910003-8

NABELEK, F.

"Natural conditions in the Mlynany Arboretum; a collection of studies of the Mlynany Arboretum."

Biologicke Prace. Bratislava, Czechoslovakia. Vol. 4, no. 12, 1958

Monthly list of East European Accessions (EEAI), LC, Vol. 8, No. 6, Jun 59, Unclas

APPROVED FOR RELEASE: 03/13/2001 CIA-RDP86-00513R001135910003-8"

"APPROVED FOR RELEASE: 03/13/2001 CIA-RDP86-00513R001135910003-8

NABELEK, I.

Electronic hearing aids, modern apparatus for the deaf. p. 545.
TECHNICKA PRACA, Bratislava, Vol. 6, no. 9, Sept. 1954.

SO: Monthly List of East European Accessions, (EEAL), LC, Vol. 5, No. 6, June 1956, Uncl.

APPROVED FOR RELEASE: 03/13/2001 CIA-RDP86-00513R001135910003-8"

"APPROVED FOR RELEASE: 03/13/2001 CIA-RDP86-00513R001135910003-8

NABELEK, Igor, inz.

Acoustic impedance of human ears and some artificial ears. Slaboprudy obzor 21 no.4:210-214 Ap '60. (EEAI 9:8)

1. Laboratorium fyziky Slovenskej akademie vied, Bratislava.
(Ear) (Telephone)

APPROVED FOR RELEASE: 03/13/2001 CIA-RDP86-00513R001135910003-8"