"APPROVED FOR RELEASE: 03/13/2001 CIA-RDP86-00513R001136120004-3

C = 16 μF, is charged to 800 V. At the moment of arrival of the starting signal to the grid of the thyratron a positive potential is fed to the anode 2 and an oscillating surge discharge occurs in the ignition system. The discharge gap is fired by electrons which are extracted from the oscillating discharge by the electric field which is applied to the main electrodes. For measuring the delay time of the breakdown in the discharge gap relative to the igniting discharge, a low ohm potentiometer R_1-R_2 is connected in series in the centre of the circuit (switch K_1 is in the position 1) and in the discharge circuit only the capacitance C_1 = 12 μF is switched on instead of the condenser bank C_1=5400 μF and the load L. A part of the voltage of the discharge circuit is taken from the potentiometer R_3-R_4 when the switch K_2 is in the position 1. The signal from the potentiometer R_3-R_4 is fed to the plates of the oscillograph beam II and from the potentiometer R_1-R_2 to the input of the beam I amplifier. Fig.2 shows oscillograms of the discharge current in the ignition system I and the initial process of the breakdown in the discharge gap II (U_p = 3 kV; time marking as shown in 50 μsec). In the ignition system the

APPROVED FOR RELEASE: 03/13/2001 CIA-RDP86-00513R001136120004-3"

"APPROVED FOR RELEASE: 03/13/2001 CIA-RDP86-00513R001136120004-3

beginning of the current and voltage pulses coincide. The delay time of the discharge is τ = 20 μsec; it decreases with increasing ignition voltage U_i and increasing discharge gap voltage U_p. For U_p = 5 kV and U_i = 1000 V, τ_{av} = 10 μsec and the average variance in the ignition delay time is $\Delta\tau$ = 0.5 to 1 μsec. Acknowledgments are expressed to A. I. Zakharov for his assistance. There are 3 figures and 6 references: 3 Soviet and 3 non-Soviet.

SUBMITTED: April 2, 1960

Text in Fig.1. Geometrical arrangement same as in figure.

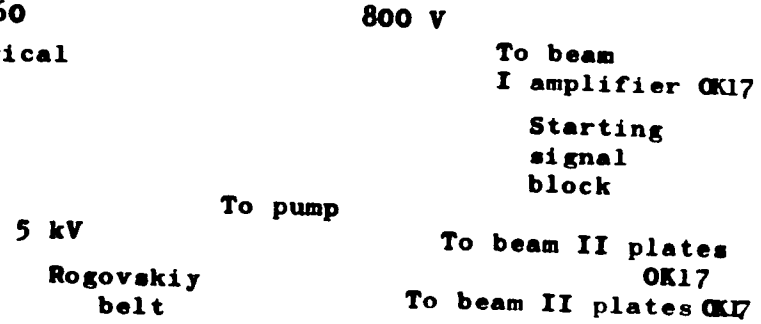

APPROVED FOR RELEASE: 03/13/2001 CIA-RDP86-00513R001136120004-3"

"APPROVED FOR RELEASE: 03/13/2001 CIA-RDP86-00513R001136120004-3

Vacuum Discharge Gap with ...

S/120/61/000/002/025/042
E210/E594

Fig.1

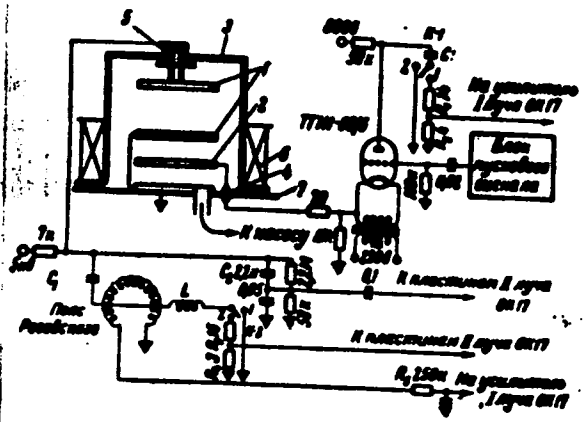

Fig.2

Card 5/5

APPROVED FOR RELEASE: 03/13/2001 CIA-RDP86-00513R001136120004-3"

"APPROVED FOR RELEASE: 03/13/2001 CIA-RDP86-00513R001136120004-3

NASTYUKHA, A.I.; POPOV, B.M.; VINOGRADOVA, L.I.

Ion injector for a cylotron and phasotron. Fiz. elek. no.1: 90-94 '62. (MIRA 17:1)

APPROVED FOR RELEASE: 03/13/2001 CIA-RDP86-00513R001136120004-3"

"APPROVED FOR RELEASE: 03/13/2001 CIA-RDP86-00513R001136120004-3

SOKOL'SKIY, V.V.; NASTYUKHA, A.I.; LOBIKOV, Ye.A.

Power supply of a system for studying a heavy-current pulse discharge. Fiz. elek. no.1:118-123 '62. (MIRA 17:1)

APPROVED FOR RELEASE: 03/13/2001 CIA-RDP86-00513R001136120004-3"

"APPROVED FOR RELEASE: 03/13/2001 CIA-RDP86-00513R001136120004-3

MASTYUKHA, A.I.; LOBIKOV, Ye.A.

Time measuring device using decatrons. Fiz. elek. no.1: 127-130 '62. (MIRA 17:1)

APPROVED FOR RELEASE: 03/13/2001 CIA-RDP86-00513R001136120004-3"

"APPROVED FOR RELEASE: 03/13/2001 CIA-RDP86-00513R001136120004-3

41568

S/057/62/032/010/006/010
B104/B102

26.2212

AUTHORS: Lobikov, Ye. A., and Nastyukha, A. I.

TITLE: Study of the energy distribution of the electrons and ions in a high-amperage toroidal discharge

PERIODICAL: Zhurnal tekhnicheskoy fiziki, v. 32, no. 10, 1962, 1223-1229

TEXT: Electron traps (Fig. 1) and a magnetic analyzer were used to measure the energy distributions of the electrons and ions in glow discharges with current densities up to 100 a/cm^2 and with weak fields such as in Al'fa or Zeta-type toroidal chambers (V. A. Glukhin et al., ZhTF, XXXI, 1394, 12, 1960; Batt et al. Proceedings of the II International Conference on the Peaceful Uses of Atomic Energy, Geneva). The measurements were made directly by the method of the retarding potential. The energy distributions for the moment at which the electron and ion signals reach a maximum were determined from several oscillograms relating these signals to the amperages of the discharge. The electron and ion temperatures and the energy E_0 of the oriented particle motion were determined from $a=\sqrt{E_0/kT}$ in the relations

Card 1/4

APPROVED FOR RELEASE: 03/13/2001 CIA-RDP86-00513R001136120004-3"

"APPROVED FOR RELEASE: 03/13/2001 CIA-RDP86-00513R001136120004-3

$$J^{+}(u)=A'\omega\left\{[x(x-a)+1]e^{-(x-a)^2}+\frac{\sqrt{\pi}}{2}a[1-\Phi(x-a)]\right\},$$

$$J^{-}(u)=A'\omega\left\{[x(x+a)+1]e^{-(x+a)^2}-\frac{\sqrt{\pi}}{2}a[1-\Phi(x+a)]\right\}.$$

$x=\sqrt{\frac{eu}{kT}}$, $a=\sqrt{\frac{mv_0^2}{2kT}}$, $\Phi(x\pm a)=\frac{2}{\sqrt{\pi}}\int_0^{x\pm a}e^{-(x\pm a)^2}d(x\pm a)$, holding for the particle fluxes. Results: At a discharge voltage u_p = 1.5 kv, an external longitudinal magnetic field H = 300 oe and a pressure of $4\cdot10^{-3}$ mm Hg the electron temperature is kT_e = 4.2 ev, E_o = 0.8 ev; at u_p = 1kv (the other parameters being the same) kT_e =2.4 ev, E_o = 1.4 ev; at u_p = 2kv kT_e = 4.5 ev, E_o = 1 ev. If the pressure is reduced then kT_e decreases to 3.7, and E_o increases to 3.0 ev. At u_p=1.5 the ions have the following parameters: kT_i=3.6 ev, E_o = 0.04 ev. The electron and ion temperatures remain unchanged when the magnetic field varies between 50 and 300 oe. The considerable directional asymmetry of the electron energy spectrum is caused by the high drift velocity of the

APPROVED FOR RELEASE: 03/13/2001 CIA-RDP86-00513R001136120004-3"

"APPROVED FOR RELEASE: 03/13/2001 CIA-RDP86-00513R001136120004-3

electrons. Only a small part of the discharge energy is consumed for heating the plasma. There are 7 figures.

SUBMITTED: October 21, 1961 (initially)
March 22, 1962 (after revision)

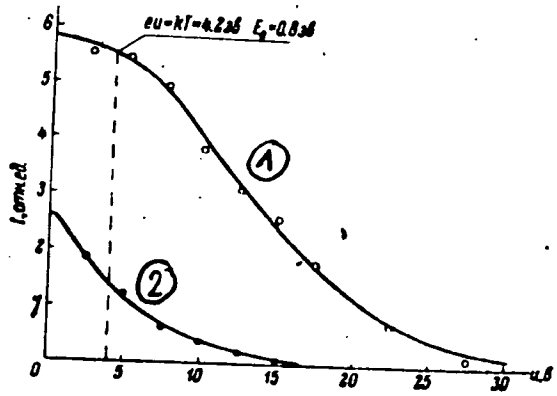

Fig. 6. Energy spectra for u_p=1.5 kv, H=300 oe, p=4·10^{-3} mm Hg.
Legend: (1) electrons; (2) ions.

APPROVED FOR RELEASE: 03/13/2001 CIA-RDP86-00513R001136120004-3"

"APPROVED FOR RELEASE: 03/13/2001 CIA-RDP86-00513R001136120004-3

Study of the energy ...

S/057/62/032/010/006/010
B104/B102

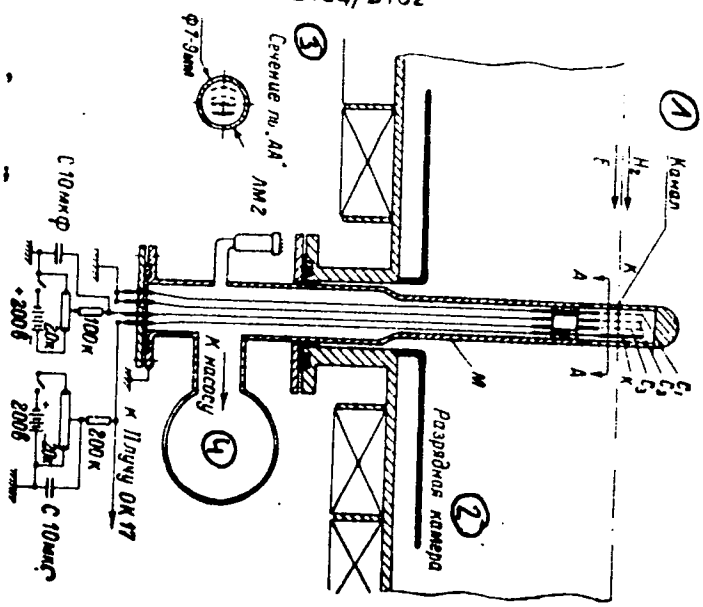

Fig. 1. Electron trap.
Legend: C_1, C_2 and C_3 grids, M copper or steel tube; (1) channel; (2) discharge chamber; (3) section at "AA"; (4) to pump.

Card 4/4

APPROVED FOR RELEASE: 03/13/2001 CIA-RDP86-00513R001136120004-3"

"APPROVED FOR RELEASE: 03/13/2001 CIA-RDP86-00513R001136120004-3

LOBIKOV, Ye.A.; MASTYUKHA, A.I.

Study of electron energy spectra of a toroidal discharge in a "Beta" machine. Zhur. tekh. fiz. 32 no.12:1492-1493 D '62. (MIRA 16:2)

(Beta-ray spectrometer)
(Electric discharges)

APPROVED FOR RELEASE: 03/13/2001 CIA-RDP86-00513R001136120004-3"

"APPROVED FOR RELEASE: 03/13/2001 CIA-RDP86-00513R001136120004-3

L 12912-63 EWT(1)/EWG(k)/BDS/ES(w)-2 AFFTC/ASD/ESD-3/AFWL/SSD
Pz-4/Pi-4/Po-4/Pab-4 AT/IJP(C)
ACCESSION NR: AP3007327 S/0097/63/033/006/0686/0692 8L 80

AUTHOR: Zubov, Yu. G.; Kolty"pin, Ye. A.; Lobikov, Ye. A.; Mastrukha, A. I.

TITLE: Investigation of the energy spectra of the electrons and ions penetrating the face of a magnetic mirror apparatus

SOURCE: Zhurnal tekhnicheskoy fiziki, v. 33, no. 6, 1963, 686-692

TOPIC TAGS: plasma diagnostics, plasma compression

ABSTRACT: The energy spectra of the electrons and ions in a plasma bunch in a magnetic mirror apparatus were measured with a simple "lateral collector" consisting of three grids and a collecting plate in a 16 mm brass tube. The first two grids were held at ground potential, a saw-tooth cut-off voltage was applied to the third grid, and the collector current (less than 15 microamperes) was measured. /Abstractor's note: The experiments appear to have been undertaken at least partly to test the usefulness of this simple device./ The hydrogen plasma was formed in a source similar to that described by D. Marshal (Transactions of the Second International Conference on Peaceful Uses of Atomic Energy, Geneva, 1958.) and injected into a 15 cm diameter stainless steel tube 200 cm long. The tube was located in a constant magnetic field of 100 to 200 oe. A pulse field that rose in 250 microsec

Card 1/2

APPROVED FOR RELEASE: 03/13/2001 CIA-RDP86-00513R001136120004-3"

"APPROVED FOR RELEASE: 03/13/2001 CIA-RDP86-00513R001136120004-3

L 12912-63
ACCESSION NR: AP3001327

6

to 6 kee at the center of the tube and 10 kee in the mirror regions provided adiabatic compression. Two measuring collectors were located, one at the center of the tube and the other at the end, 10 to 15 cm behind the magnetic mirror. Different collectors were used to measure the electron spectra and the ion spectra. Oscillograms and energy distribution curves are given for the electrons and the ions at both locations with and without magnetic compression. Plateaus in the apparent electron spectra (without magnetic compression) are ascribed to a potential difference between the plasma bunch and the apparatus. The potential is negative at the head of the plasma bunch and increases (algebraically) along its length. A similar plateau in the ion energy spectrum is ascribed to the large forward velocity of the plasma bunch (10 sup 7 cm per sec). Spectra of the electrons penetrating the magnetic mirror show that the electron energy increases during compression for about 50 microsec and subsequently decreases. The mean energy of the electrons is 10 eV. "The authors express their gratitude to Prof. B.M. Gokhberg, G.B. Yan'kov and A.V. Zharinov for their interest in the work and for valuable discussions, and also to A.I. Zakharov, V.S. Zaytsev and Z.I. Simakova for aid in conducting the experiments and fabricating the collectors." Orig. art. has: 11 figures.

ASSOCIATION: none

SUBMITTED: 12Feb62
SUB CODE: 00
2/2

DATE ACQ: 01Jul63
NO REF SOV: 002

ENCL: 00
OTHER: 002

APPROVED FOR RELEASE: 03/13/2001 CIA-RDP86-00513R001136120004-3"

"APPROVED FOR RELEASE: 03/13/2001 CIA-RDP86-00513R001136120004-3

NASTYUKHA, A.I.; TSYGANOV, E.N.

Study of the trajectories of ions escaping from the ejector in the central region of a cyclotron. Fiz. elek. no.1:51-59 '62. (MIRA 17:1)

APPROVED FOR RELEASE: 03/13/2001 CIA-RDP86-00513R001136120004-3"

"APPROVED FOR RELEASE: 03/13/2001 CIA-RDP86-00513R001136120004-3

ACCESSION NR: AP4040322 S/0057/64/034/006/1131/1132

AUTHOR: Averin,V.G.; Lobikov,Ye.A.; Nastyukha, A.I.

TITLE: Measurement of the electron density distribution in the toroidal discharge of the "beta" installation (Letter to the editor)

SOURCE: Zhurnal tekhnicheskoy fiziki, v.34, no.6, 1964, 1131-1132

TOPIC TAGS: plasma, electron density, particle distribution, discharge plasma, Beta installation

ABSTRACT: The electron density distribution in the toroidal discharge of the "beta" installation was determined from the current and electron energy distributions. The current and velocity distributions were measured with a special probe consisting of an 11 mm diameter stainless steel cylinder containing a 6 x 9 mm^2 collecting electrode. An 0.02 mm thick tantalum foil with an 0.05 mm diameter opening for entrance of electrons was welded to one wall of the cylinder, and the instrument could be located at various positions within the discharge with the opening either up stream or down. A pressure of about 10^{-4} mm Hg was maintained within the probe by separate pumping. The characteristic curves obtained with this probe are not discussed. The

Card 1/2

APPROVED FOR RELEASE: 03/13/2001 CIA-RDP86-00513R001136120004-3"

"APPROVED FOR RELEASE: 03/13/2001 CIA-RDP86-00513R001136120004-3

ACCESSION NR: AP4040322

electron density decreased monotonically with distance from the axis of the discharge and fell to zero at the wall of the tube at a distance of 10.5 cm from the axis. The decrease of electron density with increasing radius was at first very slow, the density decreasing by only 10% in the first 6.5 cm. The maximum electron density was 3×10^{13} cm^{-3} with a discharge current of 50 kA and 7×10^{13} cm^{-3} with a discharge current of 90 kA. The plasma did not break from the wall and form a filament at this current. Orig.art.has: 2 figures.

ASSOCIATION: none

SUBMITTED: 02Jul63 DATE ACQ: 19Jun64 ENCL: 00

SUB CODE: NP, ME NR REF SOV: 003 OTHER: 002

Card 2/2

APPROVED FOR RELEASE: 03/13/2001 CIA-RDP86-00513R001136120004-3"

"APPROVED FOR RELEASE: 03/13/2001 CIA-RDP86-00513R001136120004-3

RUMANIA

NASTU, C., Dr, Maj, and ANDRONESCU, Gh., Eng, Maj [affiliation not given]

"Some Observations on the Efficiency and Necessity of Protective Nutrition for Personnel Working with Special (Oxidating) Fuels."

Bucharest, Revista Sanitara Militara, Vol 62, No 5, Sep-Oct 66, pp 901-907.

Abstract: A report on an experimental study involving two lots of three dogs each to determine whether a protective diet is effective in protecting animals subject to intoxication with oxidating substances. While the small number of animals involved means that the results cannot be considered definitive, the authors did find a protective diet effective and suggest tests to determine whether it will be equally effective in protecting military personnel.

Manuscript submitted 11 April 1966.

1/1

APPROVED FOR RELEASE: 03/13/2001 CIA-RDP86-00513R001136120004-3"

"APPROVED FOR RELEASE: 03/13/2001 CIA-RDP86-00513R001136120004-3

AUTHORS: Fedyayevskiy, K. K., Nastyukova, G. K. SOV/57-28-7-28/35

TITLE: A Cylindrical Body With Intense Drag Crisis (Tsilindricheskoye telo s intensivnym krizisom soprotivleniya)

PERIODICAL: Zhurnal tekhnicheskoy fiziki, 1958, Vol. 28, Nr. 7, pp. 1556 - 1561 (USSR)

ABSTRACT: One can imagine a cylindrical body in which the laminar boundary layer in the middle of the body and the turbulent boundary layer near the rear edge of the body interchange. Such a cylindrical body is investigated by the authors. In the case of bodies that can be circumflowed only with difficulty the drag crisis becomes [illegible] se the more the vortex domain behind the body narrows down with the increase of the Re number. Therefore the strongest crisis is to be expected with such a body where the tearing-off of the laminar boundary layer corresponding to its maximum thickness takes place and where the tearing-off of the turbulent boundary layer possibly takes place at the rear edge. The results of an experimental investigation of the drag crisis in the case of a cylindrical body corresponding approximately to these

Card 1/3

APPROVED FOR RELEASE: 03/13/2001 CIA-RDP86-00513R001136120004-3"

"APPROVED FOR RELEASE: 03/13/2001 CIA-RDP86-00513R001136120004-3

A Cylindrical Body With Intense Drag Crisis SOV/ 57-28-7-28/35

conditions are given. For these investigations the authors carried out a special experiment in the wind tunnel. The investigations were carried out with two geometrically similar models. For measuring the pressure according to the profile the models were drained in the middle of the cross-section width. Besides, the models were investigated by means of interceptors fixed to the lower and upper surface of the model over the whole width. The program for the experiments consisted of finding the value for the front drag factor and for the pressure distribution over the cross section at various velocities of the air flow. The velocity of the air flow varied from 5 to 50 m/sec. The diameter of the wind tunnel in closed state was 3 m. The investigations carried out showed the existence of cylindrical bodies with a more intense drag crisis than in the case of the circular cylinder. In the case of the investigated cylindrical body the pressure distribution changes profoundly due to the crisis, while the front drag factor becomes by about 5 times smaller. Therefore it can be assumed that in the case of the investigated cylindrical body the tearing-off of the laminar boundary layer takes place near the middle of the body while in the presence of a turbulent boundary layer the circumflowing

Card 2/3

APPROVED FOR RELEASE: 03/13/2001 CIA-RDP86-00513R001136120004-3"

"APPROVED FOR RELEASE: 03/13/2001 CIA-RDP86-00513R001136120004-3

A Cylindrical Body With Intense Drag Crisis SV, 57-28-7-28/35

takes place without any tearing-off. There are 6 figures and 1 reference.

SUBMITTED: October 3, 1957

1. Cylindrical surfaces--Drag

Card 3/3

APPROVED FOR RELEASE: 03/13/2001 CIA-RDP86-00513R001136120004-3"

"APPROVED FOR RELEASE: 03/13/2001 CIA-RDP86-00513R001136120004-3

1ST AND 2ND ORDERS

PROCESSES AND PROPERTIES INDEX

Susceptibility of infusoria to ultraviolet rays as related to the colloidal properties of their protoplasm changed by means of different physicochemical methods. V. V. Alpatov and O. K. Nastyuhova. *Compt. rend. acad. sci. U. R. S. S.* 3, 595 6(in English 596 600)(1934).—A soln. (I) of 1 part 5% Na_2SO_4 to 5 parts of Beers' medium and a soln. (II) of 3.41% KSCN in 20 parts of medium have no appreciable influence on the size or rate of division of *Paramecium caudatum*, but the organisms in I were 4 times as resistant to ultraviolet radiation as controls, while those in II were much more sensitive. Electrolytes which cause colloids to swell decrease resistance to ultraviolet radiation, while those which cause shrinking increase resistance. Increase in viscosity produced by an elec. current increases resistance to ultraviolet radiation (measured by the no. of progeny), and decreases in viscosity produced by chloretone narcosis decrease resistance. W. P. Bruce

ASM-SLA METALLURGICAL LITERATURE CLASSIFICATION

APPROVED FOR RELEASE: 03/13/2001 CIA-RDP86-00513R001136120004-3"

"APPROVED FOR RELEASE: 03/13/2001 CIA-RDP86-00513R001136120004-3

1ST AND 2ND ORDERS

3RD AND 4TH ORDERS

PROCESSES AND PROPERTIES INDEX

Ca

·114

Theory of vital staining. II. G. Roskin and O. Nastyukova. Byull. Eksptl. Biol. Med. 13, 95-7(1942); cf. C.A. 36, 2821[9].—A cell is capable, even under anaerobic conditions, of changing the colorless leucobase into methylene blue; in anaerobic conditions the change is less intense, only a light blue color being produced eaptly. The presence of O_2 greatly enhances this "vital" coloration. The diffusion coloring of the nucleus and plasma occurs both aerobically and anaerobically. G. M. Kosolapoff

ASM-SLA METALLURGICAL LITERATURE CLASSIFICATION

APPROVED FOR RELEASE: 03/13/2001 CIA-RDP86-00513R001136120004-3"

"APPROVED FOR RELEASE: 03/13/2001 CIA-RDP86-00513R001136120004-3

NASTYUKOVA, O. K.

"Malignant Growth in Man as Diagnosticated by Blood Serum Toxicity for Paramoecia," Dokl. AN SSSR, 43, No.8, 1944.

Inst. Zoology, Lomonosov State U., Moscow

APPROVED FOR RELEASE: 03/13/2001 CIA-RDP86-00513R001136120004-3"

"APPROVED FOR RELEASE: 03/13/2001 CIA-RDP86-00513R001136120004-3

1ST AND 2ND ORDERS

3RD AND 4TH ORDERS

PROCESSES AND PROPERTIES INDEX

CA

11C

Specificity of action of optical isomers of mesoserine upon dextral and sinistral strains of Bacillus mycoides Flügge. V. V. Alpatov and O. K. Nastyukova. *Compt. rend. acad. sci. U.R.S.S.* 54, 537-40(1946). See C.A. 41, 2111d. M. E. Whalley

ASM-SLA METALLURGICAL LITERATURE CLASSIFICATION

APPROVED FOR RELEASE: 03/13/2001 CIA-RDP86-00513R001136120004-3"

"APPROVED FOR RELEASE: 03/13/2001 CIA-RDP86-00513R001136120004-3

NASTYUKOVA, O. K. and ALFATOV, V. V.

"The specific action of optical isomers of mepacrine upon dextral and sinistral strains of Bacillus mycoides fluite American Review of Soviet Medicine, New York 19[illegible], 5/1 (28-31) Tables 2.

Laboratory of Ecology, Lomonosov State University, Moscow [illegible]

SO: Medical Microbiology and Hygiene, Section IV, Vol. 1, [illegible]

APPROVED FOR RELEASE: 03/13/2001 CIA-RDP86-00513R001136120004-3"

"APPROVED FOR RELEASE: 03/13/2001 CIA-RDP86-00513R001136120004-3

1ST AND 2ND ORDERS

PROCESSES AND PROPERTIES INDEX

3RD AND 4TH ORDERS

CA

11c

Biology and physiology of sinistral and dextral forms of Bacillus mycoides. G. K. Nestyukhova and V. V. Alpatov (Zool. Research Inst., Lomonosov Univ., Moscow). *Mikrobiologiya* 17, 43-6(1948).—Optimum growth temp. is lower for sinistral than for dextral *B. mycoides*. Both forms have low enzyme activity in sucrose soln., with growth rate showing a pos. relation to fermentation activity. Inversion forms are potential aids in studying relations between morphological and mol. inversions, e.g. presence of *d*-peptidase in dextral colonies and specific action of both forms on optical isomers of acriquine (C.A. 41, 5820h). In these tests the study of sucrose soln. was facilitated by tinting with phenol red. I. F. Smith

ASM-SLA METALLURGICAL LITERATURE CLASSIFICATION

APPROVED FOR RELEASE: 03/13/2001 CIA-RDP86-00513R001136120004-3"

"APPROVED FOR RELEASE: 03/13/2001 CIA-RDP86-00513R001136120004-3

1ST AND 2ND ORDERS

3RD AND 4TH ORDERS

PROCESSES AND PROPERTIES INDEX

C A

11i

Specificity of action of optical isomers of acriquine on molluscs with shells of right- and left-handed spirals. V. V. Alpatov and O. K. Nastyukova. *Doklady Akad. Nauk S.S.S.R.* 59, 1281-4(1948).—Expts. with left-handed *Physa acuta*, *P. fontinalis*, and *Aplexa hypnorum*, and right-handed *Galba truncatula*, *Stagnicola palustris*, and *Radix peregr.*, immersed in aq. solns. of optical isomers of acriquine (0.05-0.2%) for 3 to 50 min. showed that all right-handed animals gave higher degree of survival in the *d*-isomer soln., while the left-handed animals gave more survivals in the *l*-isomer soln. The results are 3 times the statistical error.

G. M. Kosolapoff

ASM-SLA METALLURGICAL LITERATURE CLASSIFICATION

APPROVED FOR RELEASE: 03/13/2001 CIA-RDP86-00513R001136120004-3"

"APPROVED FOR RELEASE: 03/13/2001 CIA-RDP86-00513R001136120004-3

1ST AND 2ND ORDERS

PROCESSES AND PROPERTIES INDEX

3RD AND 4TH ORDERS

11 b)

Ca

Age variations in animals in their reaction to the optical isomers of acriquine. V. V. Alpatov and O. K. Nestyukova. *Doklady Akad. Nauk S.S.S.R.* 90, [illegible]. —Immersion for 24 hrs. of *Daphnia pulex*, *D. magna*, or *Physa acuta* in 1% soln. of acriquine isomers at various ages of the Cladocera or injection of the drug in Ringer soln. (0.19–0.66 mg./g.) into white mice, showed that with increased age the difference in reaction to the 2 isomers decreases, that is to say the organism approaches the state of a "racemic acceptor" of acriquine. This may be a foundation for the theory of age in animals, based on "racemization" of enzyme systems (this has been mentioned orally by N. D. Zelinskii). G. M. Kosolapoff

ASM-SLA METALLURGICAL LITERATURE CLASSIFICATION

APPROVED FOR RELEASE: 03/13/2001 CIA-RDP86-00513R001136120004-3"

"APPROVED FOR RELEASE: 03/13/2001 CIA-RDP86-00513R001136120004-3

PA 51T43

[redacted] - Bacteria 21 Mar 1948
Medicine - Soil Studies

"Regularities of the Geographical Distribution of Left- and Right-Coiled Colonies of Bacillus Mycoides Flugge in the Territory of the USSR," O. K. Nastyukova, Inst Zool, Moscow State U imeni M. V. Lomonosov, 3 pp

"Dok Akad Nauk SSSR, Nova Ser" Vol LIX, No 9

Soil bacteria show effect of the ice age through their distribution. In Transcaucasus and mountains of Central Asia, scientists have found bacteria dating back to Tertiary period. Can be assumed that regions having former flora and fauna contain much more bacteria

[redacted] 51T43

[redacted] - Bacteria (Contd) 21 Mar 1948

than those regions inhabited by flora and fauna after the ice age. Submitted by Academician I. I. Shmal'gausen, 24 Jan 1948.

NASTYUKOVA, O. K.

[redacted] 51T43

APPROVED FOR RELEASE: 03/13/2001 CIA-RDP86-00513R001136120004-3"

"APPROVED FOR RELEASE: 03/13/2001 CIA-RDP86-00513R001136120004-3

NASTYUKOVA, O. K.

USSR/Medicine - Atabrine, Effect of Medicine - Zoology Dec 48

"Depressive Effect of Optical Isomers of Atabrine Organic Acids and Alkaloids on the Heart's Movement in Mollusks With Shells Which Curl in Left or Right Spirsts," V. V. Alpatov, O. K. Nastyukova, Inst of Zool, Moscow State U imeni M. V. Lomonosov, 3½ pp

"Dok Ak Nauk SSSR" Vol LXIII, No 5

Experiments cited on various mollusks are useful as a working basis for asymmetrical analysis of vital processes and as a supplement to derivatives of atabrine and preparations belonging to two groups of natural substances: alkaloids and organic acids. Submitted by Acad L. A. Orbeli 14 Oct 48.

PA 55/49T58

APPROVED FOR RELEASE: 03/13/2001 CIA-RDP86-00513R001136120004-3"

"APPROVED FOR RELEASE: 03/13/2001 CIA-RDP86-00513R001136120004-3

USSR/Biology - Enantiomorphism Mar/Apr 53
Bacteria, Directed Modification

"Directed Modification of the Forms of B. mycoides Fluegge Colonies by Prolonged Breeding on Media Containing Optical Isomers," V. V. Alpatov, Moscow

Usp Sov Biol, Vol 35, No 2, pp 300-304

Results obtained together with O. K. Nastyukova indicate that l-forms and d-forms of B. mycoides exhibit a reverse sensitivity to optical isomers (specifically those of

255T14

quinacrine) in regard to growth, while work by Rettenbach and Ludwig (1951) shows that there is also a reverse sensitivity as far as transformation into the opposite form is concerned. G. D. Gauze has shown that optical isomers of arginin apparently are used in a different manner by l-forms as compared with d-forms. Gause's results with quinacrine isomers, which differ from those of the author, are due to a faulty exptl technique.

255T14

Fa 25T14

APPROVED FOR RELEASE: 03/13/2001 CIA-RDP86-00513R001136120004-3"

"APPROVED FOR RELEASE: 03/13/2001 CIA-RDP86-00513R001136120004-3

ALPATOV, V.V.; NASTYUKOVA, O.K.

Transformation of the head louse Pediculus humanus into the body louse under the effect of changed conditions of life. Biul.MOIP. .biol. 60 no.4:79-92 Jl-Ag'55. (MLRA 8:12)

LICE

APPROVED FOR RELEASE: 03/13/2001 CIA-RDP86-00513R001136120004-3"

"APPROVED FOR RELEASE: 03/13/2001 CIA-RDP86-00513R001136120004-3

NASTYUSHONOK, S.S.

SOV/3161

89(1)

PHASE I BOOK EXPLOITATION

Vsesoyuznoe nauchno-issledovatel'skoye obshchestvo mashinostroitel'noy promyshlennosti, Elektrokhimicheskaya sekstsiya

Nekhimicheskoye i spetsial'nye pokrytiya metallov (Protective, Decorative, and Special Coatings for Metals) Kiyev, Mashgiz, 1959. 294 p. 4,200 copies printed.

Editorial Board: P. K. Lavrenko, B. I. Litvak, and A. P. Rychis (Resp. Ed.); Ed. of Publishing House: M. S. Soroka; Chief Ed. (Southern Division, Mashgiz): V. E. Sardyko, Engineer.

PURPOSE: This book is intended for technical personnel in the field of protective coatings for metals.

COVERAGE: The papers in this collection, presented at a conference of the NTO Mashprom held in Odessa, deal with the mechanization and acceleration of metal-coating and plating processes performed by spraying, electrolytic, and other methods. Quality control of protective coatings is also discussed. No personalities are mentioned. References follow several of the papers.

Bogdanova, S. P., Engineer (Moscow). White Bronze Plating and Electropolishing of Copper Alloys as a Substitute for Silver Plating 174

Bairyatiev, N. T. Selection of Coatings for Clamping Terminals of Electrical-Installation Equipment 178

Bogushevich, S. R., Engineer (Leningrad). Instrument for Controlling the Thickness of Electroplating During the Process of Deposition 186

Bodn, L. S., Engineer (Moscow). Photoelectrochemical Method of Engraving Iron and Steel Plates for Machines and Instruments 191

Borodina, M. S., Engineer (Moscow). Aluminizing of Steel Reflectors by Spraying With Aluminum in Vacuum 198

Bulyayev, P. P. Candidate of Chemical Sciences (Moscow). Technological Achievements and Improvements in Equipment Design Made by NIIKhIMMASH During the Fifth Five-Year Plan in the Field of Chemical and Electrolytic Treatment of Metals 202

Fedorov, V. A., Engineer (Leningrad). Mechanization and Acceleration of Electroplating Processes 208

Gutter, E. G., Engineer (Gor'kiy). Present State and Fields of Application for Electrostatic Painting in the Machine-building Industry 215

Gubenskiy, N. A., Engineer (Moscow). Painting of Products in a High-voltage Electric Field 230

Lebedev, N. I., Engineer (Gor'kiy). Introduction of New Painting Materials and Methods at the Gor'kiy avtozavod (Gor'kiy Motor Vehicle Plant) 248

Mashkin, G. S., Engineer (Leningrad). Rapid Drying of Paint and Lacquer Coats Through Application of Commercial-Frequency Currents 259

Livshits, M. S., Engineer (Moscow). Automated Painting, Enameling, and Glazing of Deeply Recessed Products by Electrostatic Spraying 271

Derashno, G., Candidate of Technical Sciences (Moscow). Painting of Industrial Products in France 284

APPROVED FOR RELEASE: 03/13/2001 CIA-RDP86-00513R001136120004-3"

"APPROVED FOR RELEASE: 03/13/2001 CIA-RDP86-00513R001136120004-3

NASUDARL, A.A.

Characteristics of the chemical composition of medicinal forms and galenic-pharmaceutic preparations from various parts of some species of willow growing in Azerbaijan. Azerb.med.zhur. 42 no.1:43-47 Ja '65. (MIRA 1- 5)

APPROVED FOR RELEASE: 03/13/2001 CIA-RDP86-00513R001136120004-3"

"APPROVED FOR RELEASE: 03/13/2001 CIA-RDP86-00513R001136120004-3

NIKOL'SKAYA, Vera Vasil'yevna; GRIGOR'YEV, Dmitriy Pavlovich; MASULICH, Lidiya Fedorovna; RIKHTER, G.D., doktor geograficheskikh nauk, otvetstvennyy red.; POCHEKUTOV, K.I., red. izd-va; ZELENKOVA, Ye.V., tekhn. red.

[Zeya-Bureya Plain; papers on its physical geography in relation to agricultural exploitation] Zeisko-Bureinskaia ravnina; materialy po fizicheskoi geografii v sviazi s sel'skokhoziaistvennym ispol'zovaniem. Moskva, Izd-vo Akad. nauk SSSR, 1958. 133 p. (MIRA 11:7)
(Zeya-Bureya Plain—Physical geography)

APPROVED FOR RELEASE: 03/13/2001 CIA-RDP86-00513R001136120004-3"

"APPROVED FOR RELEASE: 03/13/2001 CIA-RDP86-00513R001136120004-3

ADIGAMOV, Ya.M.; IOFIN, S.L.; NASUPA, N.A.; FEDOSOV, M.K.; SHCHEPANOV, P.A.

Improving the working of the Zolotushinskoye deposit. Sbor. trud. VNIITSVETMET no.4:20-36 '59. (MIRA 16:8)

(Mining engineering)

APPROVED FOR RELEASE: 03/13/2001 CIA-RDP86-00513R001136120004-3"

"APPROVED FOR RELEASE: 03/13/2001 CIA-RDP86-00513R001136120004-3

NASURDINOV, G.; STRUYEVA, N.

One and a half times the daily standard. Stroitel' 2 no.4-5:5 Ap-My '56. (MLRA 10:1)

1. Brigadir montazhnikov zavoda krupnopanel'nogo domostroyeniya, Magnitogorsk (for Nasurdinov). 2. Proizvoditel' rabot zavoda krupnopanel'nogo domostroyeniya, Magnitogorsk (for Struyeva).
(Magnitogorsk--Precast concrete construction)

APPROVED FOR RELEASE: 03/13/2001 CIA-RDP86-00513R001136120004-3"

"APPROVED FOR RELEASE: 03/13/2001 CIA-RDP86-00513R001136120004-3

NAFURI, I.B., aspirant

Clinicomorphological data in some forms of male sterility. Vest. derm. i ven. no.2:81-84 '65. (MIRA 18:10)

1. Kafedra fakul'tetskoy khirurgii (zav. kursom urologii - prof. L.P. Krayzel'burd) i kafedra patologicheskoy anatomii (zav. - prof. V.A. Zhukhin) Bashkirskogo meditsinskogo instituta, Ufa.

APPROVED FOR RELEASE: 03/13/2001 CIA-RDP86-00513R001136120004-3"

"APPROVED FOR RELEASE: 03/13/2001 CIA-RDP86-00513R001136120004-3

NASURI, I.B.

Clinical morphological examination in azoospermia. Urologiia. 29 no.3:28-32 My-Je '64. (MIRA 18:10)

1. Fakul'tetskaya khirurgicheskaya klinika (zav. kursom urologii-prof. L.P. Krayzel'burd) Bashkirskogo meditsinskogo instituta, Ufa.

APPROVED FOR RELEASE: 03/13/2001 CIA-RDP86-00513R001136120004-3"

"APPROVED FOR RELEASE: 03/13/2001 CIA-RDP86-00513R001136120004-3

NASUSHKIN, A.I.; KUSHNIRENKO, S.T.

Results of experiments on growing corn with least labor expenditures. Mekh. sil'. hosp. 9 no.2:4-6 F '58. (MIRA 11:3)

1.Ministerstvo sil's'kogo gospodarstva URSR.
(Corn (Maize))

APPROVED FOR RELEASE: 03/13/2001 CIA-RDP86-00513R001136120004-3"

"APPROVED FOR RELEASE: 03/13/2001 CIA-RDP86-00513R001136120004-3

GALENKO, M.D. [Halenko, M.D.], nauchnyy rabotnik; NASUSHKIN, A.I., insh.

Converting pull-type S-6 combines into self-propelled types. Mekh.sil'.hosp. 9 no.12:5-7 D '58. (MIRA 12:1)

1. Ukrainskiy nauchno-issledovatel'skiy institut mekhanizatsii i elektrifikatsii sel'skogo khozyaystva (for Galenko). 2. Ministerstvo sel'skogo khozyaystva USSR (for Nasushkin).
(Combines (Agricultural machinery))

APPROVED FOR RELEASE: 03/13/2001 CIA-RDP86-00513R001136120004-3"

"APPROVED FOR RELEASE: 03/13/2001 CIA-RDP86-00513R001136120004-3

GORSKIY, O.I.[Hors'kyi, O.I.], agronom; MASUSHKIN, A.I., insh.; ALEKSEYEVSKIY, Ye.Ye.[Alieksieiev's'kyi, IE.IE.], red.; IEFIMENKOV, M.V., red.; GULENKO, O.I.[Hulenko, O.I.], tekhn. red.

[Let's transform bogs into fertile lands] Peretvoryme bolota v rodiuchi zemli. Kyiv, Derzhsil'hospvydav URSR, 1960. 230 p. (MIRA 16:5)

(Ukraine—Drainage)

APPROVED FOR RELEASE: 03/13/2001 CIA-RDP86-00513R001136120004-3"

"APPROVED FOR RELEASE: 03/13/2001 CIA-RDP86-00513R001136120004-3

WAKSMUNDZKI, Andrzej; OSCIK, Jaroslaw; MATUSEWICZ, Janusz; NASUTO, Romuald; ROSYLO, Jan

Structure of silica gels, specifically adsorbing pyridine, quinoline and acridine. Pt. 1. Przem chem 40 no.7:387-390 Jl '61.

1. Katedra Chemii Fizycznej, Uniwersytet im. M. Curie-Sklodowskiej, Lublin.

APPROVED FOR RELEASE: 03/13/2001 CIA-RDP86-00513R001136120004-3"

"APPROVED FOR RELEASE: 03/13/2001 CIA-RDP86-00513R001136120004-3

NASUTO, Romuald; WAKSMUNDZKI, Andrzej; OSCIK, Jaroslaw; ROZYLO, Jan

The heat of wetting specifically active silica gels with some organic solvents. Przem chem 40 no.8:432-433 Ag '61.

1. Katedra Chemi Fizycznej Uniwersytetu im M. Curie-Sklodowskiej Lublin.

APPROVED FOR RELEASE: 03/13/2001 CIA-RDP86-00513R001136120004-3"

"APPROVED FOR RELEASE: 03/13/2001 CIA-RDP86-00513R001136120004-3

WAKSMUNDZKI, Andrzej; OSCIK, Jaroslaw; NASUTA, Romuald; ROZYLE, Jan

The structure of pyridine adsorption layers on silicagels specifically activated with respect to some heterocyclic bases. Przem chem 40 no.9: 527-529 S '61.

1. Katedra Chemii Fizycznej, Uniwersytet im, Curie-Sklodowskiej, Lublin.

APPROVED FOR RELEASE: 03/13/2001 CIA-RDP86-00513R001136120004-3"

"APPROVED FOR RELEASE: 03/13/2001 CIA-RDP86-00513R001136120004-3

WAKSMUNDSKI, Andrzej; OSCIK, Jaroslaw; ROZYLO, Jan; NASUTO, Romuald

Energetic effects of pyridine adsorption on silicagels specifically activated with respect to some heterocyclic bases. Przem chem 40 no.10:565-567 O '61.

1. Katedra Chemii Fizycznej, Uniwersytet im. M. Curie-Skledowskiej, Lublin.

APPROVED FOR RELEASE: 03/13/2001 CIA-RDP86-00513R001136120004-3"

"APPROVED FOR RELEASE: 03/13/2001 CIA-RDP86-00513R001136120004-3

WAKSMUNDZKI, Andrzej; OSCIK, Jaroslaw; ROZYLO, Jan; NASUTO, Romuald

Influence of the drying conditions of hydrogels on the change of the adsorption capacity of specific silicagels. Przem chem 41 no.3:129-130 Mr '62.

1. Katedra Chemii Fizycznej Uniwersytetu im. Marii Curie Sklodowskiej

APPROVED FOR RELEASE: 03/13/2001 CIA-RDP86-00513R001136120004-3"

"APPROVED FOR RELEASE: 03/13/2001 CIA-RDP86-00513R001136120004-3

NASVETNIKOV, S., inzh.

Housing construction combine No. 2. Zhil. stroi. no.7:15-17 Jl '61. (MIRA 14:8)

(Minsk--Precast concrete)

APPROVED FOR RELEASE: 03/13/2001 CIA-RDP86-00513R001136120004-3"

"APPROVED FOR RELEASE: 03/13/2001 CIA-RDP86-00513R001136120004-3

NASVETSEVICH, G.

Notes on economics. Mast.ugl. 9 no.1:5-6 Ja '60.(MIRA 13:8)

1. Glavnyy bukhgalter trosta Cheremkhovugol'.
(Cheremkhovo Basin- Coal mines and mining)

APPROVED FOR RELEASE: 03/13/2001 CIA-RDP86-00513R001136120004-3"

"APPROVED FOR RELEASE: 03/13/2001 CIA-RDP86-00513R001136120004-3

NASYBULLIN, [illegible]

Courses for the improvement of the qualifications of information workers in the West Siberian Economic Region. NTI no.5:15 '65. (MIRA 18:7)

1. Glavnyy inzh. TSentral'nogo byuro tekhnicheskoy informatsii Zapando-Sibirskogo soveta narodnogo khozyaystva.

APPROVED FOR RELEASE: 03/13/2001 CIA-RDP86-00513R001136120004-3"

"APPROVED FOR RELEASE: 03/13/2001 CIA-RDP86-00513R001136120004-3

MUDROGINA, N.S.; NASYBULIN, N.N.

Genesis of the silicified rocks in the Shing-Magian region. Inform.snor.VSEGEI no.46:109-119 '61. (MIRA 15:3)
(Shing Valley--Petrology) (Magian Valley--Petrology)

APPROVED FOR RELEASE: 03/13/2001 CIA-RDP86-00513R001136120004-3"

"APPROVED FOR RELEASE: 03/13/2001 CIA-RDP86-00513R001136120004-3

MEDROGINA, N.S.; NASYBULIN, N.N.

Structural and morphological types of deposits in the Zeravshan-Gissar antimony-mercury belt. Trudy VSEGEI 103: 145-153 '64 (MIRA 17:8)

APPROVED FOR RELEASE: 03/13/2001 CIA-RDP86-00513R001136120004-3"

"APPROVED FOR RELEASE: 03/13/2001 CIA-RDP86-00513R001136120004-3

L 21650-66 EWT(d)/EWT(m)/EWP(w)/EWP(f)/EPF(n)-2/EWP(v)/T-2/EWP(k)/ETC(m)-6 WW/RM
ACC NR: AP6006138 SOURCE CODE: UR/0114/65/00/010/0022/0025

AUTHORS: Shvets, I. T. (Academician AN UkrSSR); Dyban, Ye. P. (Candidate of technical sciences); Stredomskiy, M. V. (Candidate of technical sciences); Gusak, Ya. M. (Engineer); Zatkovetskiy, G. N.; Klimenko, V. N.; Nasybullina, A. A.; Chepaskina, S. M.

ORG: none

TITLE: Development and investigation of the air cooling system for the high-pressure turbine rotor of GT-6-750 TMZ

SOURCE: Energomashinostroyeniye, no. 10, 1965, 22-25

TOPIC TAGS: turbine, turbine cooling, gas turbine, blade cooling/ GT-6-750 gas turbine

ABSTRACT: In conjunction with the development of gas turbine GT-6-750 (initial gas temperature 750C, pressure 5.8 kg/cm^2), several air cooling systems for the high-pressure turbine rotor were designed and tested at the Ural Turbine Factory and Institute of Heat Physics of the AN UkrSSR (Ural'skiy turbomotornyy zavod i Institute teknnicheskoy teplofiziki AN UkrSSR). The development of the final

Card 1/4 UDC: 621.438:62-71.001.5

APPROVED FOR RELEASE: 03/13/2001 CIA-RDP86-00513R001136120004-3"

"APPROVED FOR RELEASE: 03/13/2001 CIA-RDP86-00513R001136120004-3

L 21650-66

ACC NR: AP6006138

cooling system shown in Fig. 1 is discussed and the temperature distributions at the blade roots and in the turbine wheel are graphically presented for cooling air flows of 0.9 and 0.73 kg/sec respectively (0.73 kg/sec represents 1.7% of the total gas flow). The values of local cooling air pressure, temperature, flow rate, and heat transfer coefficient at the 16 locations in Fig. 1 are tabulated. It was found that the cooling system maintained all metal temperatures below 410C (at 0.73 kg/sec) and calculations show that the cooling flow can be further reduced to 0.4--0.45 kg/sec without dangerous temperatures. With such a cooling system, perlitic steels can be used with gas temperatures of up to 900C. The experiments confirmed the accuracy of previously proposed methods for calculating the cooling system parameters (Ye. P. Dyban, Issledovaniye sistem vozdushnogo ekhlashdeniya roterov gazovykh turbin. Avtoreferat dissertatsii. LPI im. M. I. Kalinina, 1964).

Card 2/4

APPROVED FOR RELEASE: 03/13/2001 CIA-RDP86-00513R001136120004-3"

"APPROVED FOR RELEASE: 03/13/2001 CIA-RDP86-00513R001136120004-3

L 21650-66

ACC NR: AP6006138

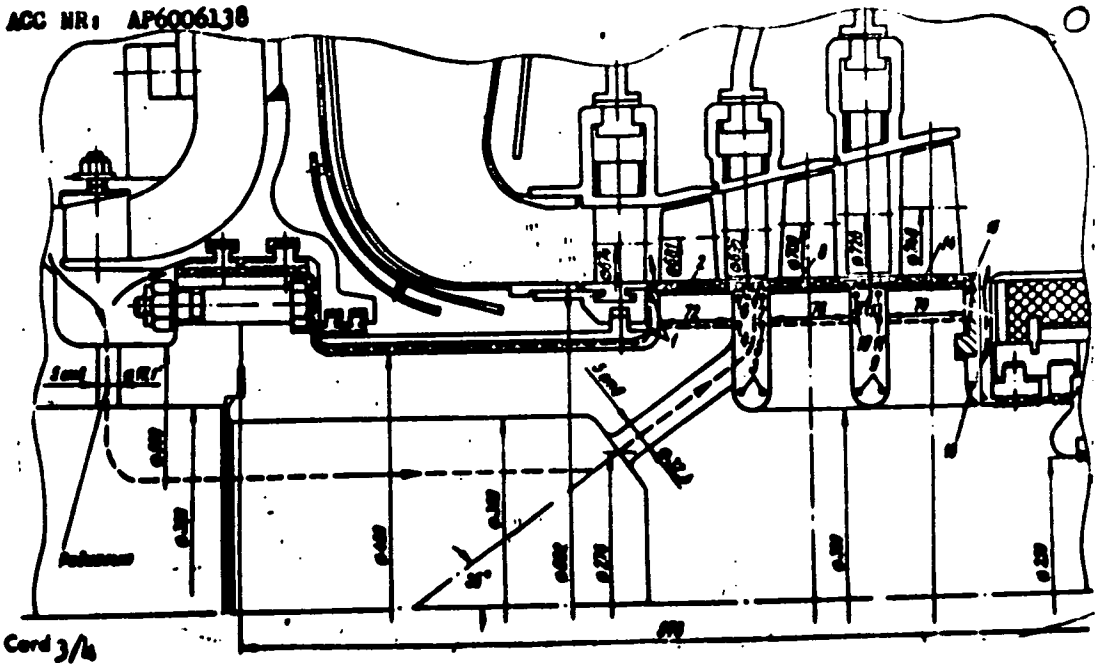

Card 3/4

APPROVED FOR RELEASE: 03/13/2001 CIA-RDP86-00513R001136120004-3"

"APPROVED FOR RELEASE: 03/13/2001 CIA-RDP86-00513R001136120004-3

L 21650-66

ACC NR: AP6006138

Fig. 1. Cooling system for GT-6-750 gas turbine rotor.

Orig. art. has: 1 table and 4 figures.

SUB CODE: 21, 13/ SUBM DATE: none/ ORIG REF: 003

Card 4/4

APPROVED FOR RELEASE: 03/13/2001 CIA-RDP86-00513R001136120004-3"

"APPROVED FOR RELEASE: 03/13/2001 CIA-RDP86-00513R001136120004-3

L 12659-65 EWG(j)/EWT(m)/EPF(c)/EWA(d)/EWP(t)/EPR/EWP(b) Pr-4/Ps-4 IJP(c)
JD/JG/WB

ACCESSION NR: AP5005566 S/0080/65/038/002/0341/0345

49
41
B

AUTHOR: Sayfullin, R. S.; Nasybullina, F. I.

TITLE: Protection of silver against darkening

SOURCE: Zhurnal prikladnoy khimii, v. 38, no. 2, 1965, 341-345

TOPIC TAGS: silver darkening, beryllium oxide film, electrochemistry, chromate treatment, ethanol scouring, hydrogen sulfide, silver sulfide, beryllization

ABSTRACT: Optimal conditions for depositing beryllium oxide films on silver or silver plated materials (Plating v. 48, 285, 1961) were studied under laboratory and commerical conditions, and the protection of silver by chromate treatment was also studied. Silver-plated or silver-rubbed watch dials were treated and the best results were obtained with solutions of 2.4-3.4 g/liter $BeSO_4 \cdot 4H_2O$ with the addition of ammonia to pH 5.7-5.8, by 3-5 min. treatment at a current density of 0.005 A/cm^2. Scouring in ethanol at 20C is recommended as pretreatment if required, and Ag, Ni, or Cu ions are shown to decrease the quality of the protective films, so that their removal by preliminary electrolysis is recommended. The quality of the films is also impaired by the Cl ions present in wash waters or in the electrolyte

APPROVED FOR RELEASE: 03/13/2001 CIA-RDP86-00513R001136120004-3"

"APPROVED FOR RELEASE: 03/13/2001 CIA-RDP86-00513R001136120004-3

Ag, Ni, or Cu ions are shown to decrease the quality of the [illegible]
that their removal by preliminary electrolysis is recommended. The quality of the films is also impaired by the Cl ions present in wash waters or in the electrolyte

Card 1/2

APPROVED FOR RELEASE: 03/13/2001 CIA-RDP86-00513R001136120004-3"

"APPROVED FOR RELEASE: 03/13/2001 CIA-RDP86-00513R001136120004-3

L 32659-65
ACCESSION NR: AP5005566

on by sandblasting of the silver surface before the deposition of films. Films of higher quality were produced on silver-plated surfaces than on silver-rubbed material. Protective films obtained by electrochemical deposition in potassium chromate solutions had a slightly yellow coloration but better stability in hydrogen sulfide atmospheres than chemically deposited films. "Beryllization was studied at the Chistopol'skiy chasovoy zavod (Chistopol' watch factory) with the participation of A. V. Kazantseva, L. V. Mikhaylitsyna, A. A. Skorobogatova, R. Yu. Timerina and V. N. Fokinskaya." Orig. art. has: 3 tables.

ASSOCIATION: Kazanskiy khimiko-tekhnologicheskiy institut imeni S. M. Kirova (Kazan chemical engineering institute)

SUBMITTED: 03May63 ENCL: 00 SUB CODE: IC, GC

NO REF SOV: 002 OTHER: 009

Card 2/2

APPROVED FOR RELEASE: 03/13/2001 CIA-RDP86-00513R001136120004-3"

"APPROVED FOR RELEASE: 03/13/2001 CIA-RDP86-00513R001136120004-3

SAYFULLIN, R.S.; NASYBULLINA, F.I.

Increasing the hardness of silver electroplating. Izv.vys.ucheb. zav; khim.i khim.tekh. 4 no.5:817-820 '61. (MIRA 14:11)

1. Kazanskiy khimiko-tekhnologicheskiy institut imeni Kirova, kafedra neorganicheskoy khimii.
(Silver—Plating)

APPROVED FOR RELEASE: 03/13/2001 CIA-RDP86-00513R001136120004-3"

"APPROVED FOR RELEASE: 03/13/2001 CIA-RDP86-00513R001136120004-3

NASYBULLINA, Kh.S.

Changes in the biological properties of the blood in brucellosis. Izv. AN Kazakh. SSR. Ser. kraev. pat. no.5: 72-78 '51. (MLRA 10:2)

(BRUCELLOSIS) (BLOOD--ANALYSIS AND CHEMISTRY)

APPROVED FOR RELEASE: 03/13/2001 CIA-RDP86-00513R001136120004-3"

"APPROVED FOR RELEASE: 03/13/2001 CIA-RDP86-00513R001136120004-3

NAGYBULLINA, Kh.G., dotsent

Stabilization of donor blood used for exchange transfusion of blood. Probl. gemat. i perel. krovi 9 no.5:49-51 My '64. (MIRA 18:3)

1. Kafedra patologicheskoy fiziologii (zav.- prof. O.G. Glozman Alma-Atinskogo meditsinskogo instituta.

APPROVED FOR RELEASE: 03/13/2001 CIA-RDP86-00513R001136120004-3"

"APPROVED FOR RELEASE: 03/13/2001 CIA-RDP86-00513R001136120004-3

KUDRYAVTSEVA, N.P.; KACHURETS, V.I.; NASYBULLINA, S.Kh.

Use of strophanthin in the compound treatment of cardiovascular disorders in toxic diphtheria. Kaz.med.zhur. no.3:42-43 My-Je '62. (MIRA 15:9)

1. Kafedra detskikh infektsiy (zav. - prof. N.P.Kudryavtseva) i difteriynoye otdeleniye 1-y infektsionnoy klinicheskoy bol'nitsy imeni prof. A.F.Agafonova (glavnyy vrach - D.P.Petrov). Kazanskogo meditsinskogo instituta.
(STROPHANTHIN) (DIPHTHERIA)
(CARDIOVASCULAR SYSTEM--DISEASES)

APPROVED FOR RELEASE: 03/13/2001 CIA-RDP86-00513R001136120004-3"

"APPROVED FOR RELEASE: 03/13/2001 CIA-RDP86-00513R001136120004-3

S/137/62/000/003/051/19:
A006/A101

18 7500

AUTHORS: Nasynbayev, G. N., Presnyakov, A. A.

TITLE: On the effect of the crystallization rate on the structure and properties of technically pure metals

PERIODICAL: Referativnyy zhurnal, Metallurgiya, no. 3, 1962, 26, abstract 30172 (Tr. In-ta yadern. fiz. AN KazSSR, 1961, v. 4, 78 - 84)

TEXT: The authors investigated the effect of the rate of crystallization of Al (grade АВ00 [AV00]), Cu (M0), Zn (Ц0 [Ts0]), Sn (01), Sb (Су0 [Su0]), Pb (С1 [S1]), and Mg (Mg1), on their structure and properties. It is shown that microhardness of quenched specimens is below that of slowly cooled samples. Changes in the crystallization rate cause changes in the structure and properties of technically pure metals, since at a high rate the admixtures form metastable solid solutions with the metal. The results are tabulated, and photographs of microsections and radiographs are given.

A. Tseydler

[Abstracter's note: Complete translation]

Card 1/1

APPROVED FOR RELEASE: 03/13/2001 CIA-RDP86-00513R001136120004-3"

"APPROVED FOR RELEASE: 03/13/2001 CIA-RDP86-00513R001136120004-3

NASYPAYKO, V. M., Cand of Agric Sci -- (diss) "Biological and Management Peculiarities of Mixing Winter Wheat," Odessa, 1959, 16 pp (Odessa Agricultural Institute) (KL, 1-60, 124)

APPROVED FOR RELEASE: 03/13/2001 CIA-RDP86-00513R001136120004-3"

"APPROVED FOR RELEASE: 03/13/2001 CIA-RDP86-00513R001136120004-3

NASYPAYKO, V.M.

Intervarietal breeding of winter wheat. Agrobiologiia no.3: 335-343 My-Je '59. (MIRA 12:9)

1. Vsesoyuznyy selektsionno-geneticheskiy institut, g.Odessa.
(Wheat breeding)

APPROVED FOR RELEASE: 03/13/2001 CIA-RDP86-00513R001136120004-3"

"APPROVED FOR RELEASE: 03/13/2001 CIA-RDP86-00513R001136120004-3

MASYPAYKO, Vasiliy Mitrofanovich; ISAROV, Yuriy Terent'yevich, kand. sel'khoz. nauk; KIRICHENKO, F.G., laureat Leninskoy premii, akademik; VINNITSKIY, S., red.; MOLCHANOVA, T., tekhn. red.

[Varieties and seeds; seed production of grain, pulse, and oleaginous crops in the southern Ukraine] Sort i semena; semenovodstvo zernovykh, zernobobovykh i maslichnykh kul'tur na iuge Ukrainy. Predisl. i obshchaia red. F.G.Kirichenko. Odessa, Odesskoe knizhnoe izd-vo, 1960. 243 p. (MIRA 14:7)

1. Vsesoyuznaya akademiya sel'skokhozyaystvennykh nauk imeni V.I.Lenina i Ukrainskaya akademiya sel'skokhozyaystvennykh nauk (for Kirichenko)
(Ukraine—Seed production)

APPROVED FOR RELEASE: 03/13/2001 CIA-RDP86-00513R001136120004-3"

"APPROVED FOR RELEASE: 03/13/2001 CIA-RDP86-00513R001136120004-3

BLAZHEVSKIY, Ye.V., dvazhdy Geroy Sotsialisticheskogo Truda; VOVCHENKO, I.V., kand. sel'khoz. nauk, zasl. agronom Ukr.SSR; VOROB'YEV, N.Ye., st. nauchn. sotr.; GESHELE, E.E., doktor biol. nauk, prof.; ZUBRITSKIY, A.A., agronom; KISEL'GOF, Z.S., insh., zasl. mekhanizator sel'skogo khoz. Ukr.SSR; KLYUCHKO, P.F., kand. sel'khoz. nauk; KORCHAGIN, A.Ye.; LEBEDEV, Ye.M., st. nauchn. sotr.; NASYPAYKO, [redacted] kand. sel'khoz.nauk; PIKUS, G.P., kand. sel'khoz.nauk; [redacted], V.N., doktor sel'khoz. nauk, prof.; SPIVAK, I.I., zootekhnik; TEMCHENKO, L.V., kand. sel'khoz. nauk; FEDULAYEV, A.A., agronom; YAKOVENKO, V.A., kand. tekhn.nauk; KITAYEV, I.A., kand. sel'khoz. nauk, red.; MUSIYKO, A.S., akademik, red.; VINNITSKIY, S.P., red.; MOLCHANOVA, T.N., tekhn. red.

[For high corn yields] Za bol'shuiu kukurusu. [By] E.V. Blazhevskii i dr. Odessa, Odesskoe knizhnoe izd-vo, 1962. 173 p. (MIRA 16:7)

1. Zven'yevoy kolkhoza im. Gor'kogo Kotovskogo rayona na Odesshchine (for Blazhevskiy). 2. Glavnyy agronom sovkhoza "Bessarabskiy" (for Korchagin). 3. Ukrainskaya akademiya sel'skokhozyaystvennykh nauk (for Musiyko).
(Ukraine—Corn (Maize))

APPROVED FOR RELEASE: 03/13/2001 CIA-RDP86-00513R001136120004-3"

"APPROVED FOR RELEASE: 03/13/2001 CIA-RDP86-00513R001136120004-3

NASYPAYKO, V.M., kand. sel'skokhoz. nauk

Yield of high-quality winter wheat seeds as compared with seeds of subsequent reproductions. Agrobiologiia no.3:335-341 My-Je '65. (MIRA 18:11)

1. Vsesoyuznyy selektsionno-geneticheskiy institut, Odessa.

APPROVED FOR RELEASE: 03/13/2001 CIA-RDP86-00513R001136120004-3"

"APPROVED FOR RELEASE: 03/13/2001 CIA-RDP86-00513R001136120004-3

S/020/62/145/005/012/020
B106/B144

AUTHORS: Zavgorodniy, S. V., and Nasyr, I. A.

TITLE: Cycloalkylation of monoalkyl benzenes by cyclohexene

PERIODICAL: Akademiya nauk SSSR. Doklady, v. 145, no. 5, 1962, 1061-1063

TEXT: The authors studied the cycloalkylation of toluene, ethyl benzene, and n-propyl benzene by cyclohexene in the presence of $BF_3 \cdot H_3PO_4$ as a catalyst under varying conditions. At molar ratios of alkyl benzene : cyclohexene : catalyst = (1 to 5) : 1 : (0.1 to 0.4), mainly monoalkylation occurs in o- and p-position to the alkyl radical of the aromatic hydrocarbon, with the p-product prevailing. An increase from 1 to 5 alkyl benzene moles per 1 mole cyclohexene under otherwise equal conditions increases the monocyclohexyl alkyl benzene yield. Optimum conditions: toluene: 20°C, molar ratio = 5 : 1 : 0.3, yield 91%; ethyl benzene: 60°C, molar ratio = 3 : 1 : 0.3 (or 5 : 1 : 0.4), yield 90%; n-propyl benzene: 60°C, molar ratio = 3 : 1 : 0.3, yield 87%, besides 8.6% dicyclohexyl-n-propyl benzenes. At the molar ratio alkyl benzene : cyclohexene : catalyst

Card 1/3

APPROVED FOR RELEASE: 03/13/2001 CIA-RDP86-00513R001136120004-3"

"APPROVED FOR RELEASE: 03/13/2001 CIA-RDP86-00513R001136120004-3

= 0.5 : 1 : 0.3, dicyclohexyl alkyl benzenes form with considerable yields decreasing in the order toluene > ethylbenzene > n-propyl benzene while the yields in monocyclohexyl alkyl benzenes increase in the same order. The yields in monocycloalkylation show a maximum in all three cases within the range 20 - 80°C; whereas those in dicyclohexyl alkyl benzenes are almost independent of temperature. In the range of 0.2 - 0.4 moles per mole of cyclohexene, the amount of catalyst does not affect the yield in monocyclohexyl alkyl benzenes. The cyclohexene is added, with vigorous stirring, to an alkyl benzene - catalyst mixture. The slower the addition the better the yields, particularly in the alkylation of n-propyl benzene. Stirring after adding cyclohexene has no effect in the case of toluene and ethyl benzene, but increases the yields in dicyclohexyl-n-propyl benzenes at the expense of the monocyclohexyl-n-propyl benzenes. Main reaction products: p-cyclohexyl toluene: colorless liquid, b. p. 101°C/4 mm, d_4^{20} 0.9380, n_D^{20} 1.5244; p-cyclohexyl-ethyl benzene: b. p. 108 - 109°C/4 mm, d_4^{20} 0.9291, n_D^{20} 1.5204; p-cyclohexyl-n-propyl benzene: b. p. 119 - 120°C/4 mm, d_4^{20} 0.9216, n_D^{20} 1.5160. There are 4 figures.

APPROVED FOR RELEASE: 03/13/2001 CIA-RDP86-00513R001136120004-3"

"APPROVED FOR RELEASE: 03/13/2001 CIA-RDP86-00513R001136120004-3

Cycloalkylation of ...

S/020/62/145/005/012/020
B106/B144

ASSOCIATION: Kiyevskiy politekhnicheskiy institut (Kiyev Polytechnic Institute), Institut organicheskoy khimii Akademii nauk USSR (Institute of Organic Chemistry of the Academy of Sciences UkrSSR)

PRESENTED: March 21, 1962, by A. V. Topchiyev, Academician

SUBMITTED: March 21, 1962

Card 3/3

APPROVED FOR RELEASE: 03/13/2001 CIA-RDP86-00513R001136120004-3"

"APPROVED FOR RELEASE: 03/13/2001 CIA-RDP86-00513R001136120004-3

NASYR, I.A.; ZAVGORODNIY, S.V.

Synthesis and autoxidation of methylcyclohexylbenzene. Ukr. khim. zhur. 30 no.8:862-867 '64. (MIRA 17:11)

1. Kiyevskiy politekhnicheskiy institut i Institut organicheskoy khimii AN UkrSSR.

APPROVED FOR RELEASE: 03/13/2001 CIA-RDP86-00513R001136120004-3"

"APPROVED FOR RELEASE: 03/13/2001 CIA-RDP86-00513R001136120004-3

APPROVED FOR RELEASE: 03/13/2001 CIA-RDP86-00513R001136120004-3"

"APPROVED FOR RELEASE: 03/13/2001 CIA-RDP86-00513R001136120004-3

AKISHEV, T.A.; MASYRKHANOV, A.N.

Practice in applying electric prospecting to the karst-interstitial waters in central Kazakhstan. Izv. AN Kazakh. SSR. Ser. geol. 21 no.2:78-86 Mr-Ap'64. (MIRA 17:5)

1. TSentral'no-Kazakhstanskoye geologicheskoye upravleniye, Karaganda.

APPROVED FOR RELEASE: 03/13/2001 CIA-RDP86-00513R001136120004-3"

"APPROVED FOR RELEASE: 03/13/2001 CIA-RDP86-00513R001136120004-3

NASYROV, A.

Dissertation defended for the degree of Candidate of Economic Sciences at the Institute of Economics

"Heavy Industry of the Uzbek SSR in the Postwar Period (1945-1958)."

Vestnik Akad. Nauk, No. 4, 1963, pp 119-145

APPROVED FOR RELEASE: 03/13/2001 CIA-RDP86-00513R001136120004-3"

"APPROVED FOR RELEASE: 03/13/2001 CIA-RDP86-00513R001136120004-3

NASYROV, A., assistent

Materials on the study of corn and [illegible] pests. [illegible]
Tashk. gos. ped. inst. 35 no.1:5[illegible] '65. [illegible]

APPROVED FOR RELEASE: 03/13/2001 CIA-RDP86-00513R001136120004-3"

"APPROVED FOR RELEASE: 03/13/2001 CIA-RDP86-00513R001136120004-3

L 35739-66 EWT(1)/T/EWP(k) IJP(c) WW/WW

ACC NR: AP6000901 SOURCE CODE: UR/0181/65/007/012/3704/3706

AUTHORS: Smolenskiy, G. A.; Masyrov, A.

ORG: Institute of Semiconductors, AN SSSR, Leningrad (Institut poluprovodnikov AN SSSR)

64

B

TITLE: Ferroacoustic resonance with longitudinal ultrasonic waves

21

SOURCE: Fizika tverdogo tela, v. 7, no. 12, 1965, 3704-3706

TOPIC TAGS: ultrasonic wave, ferroelectric resonance, acoustic resonance, spin phonon interaction, single crystal, yttrium compound, magnetic field

ABSTRACT: Whereas earlier investigations of ferroacoustic resonance were made by excitation of transverse sound waves, in the present investigation the authors studied spin-phonon interaction in single crystals of yttrium ferrite with garnet type structure excited with longitudinal sound waves in the frequency range from 100 to 220 Mc at room temperature. The samples were cut along the [110] axis in the form of parallelepipeds measuring 7.5 x 2 x 2 mm or cylinders 7.4 mm long and 3.8 mm in diameter. The measurements were made with a

Card 1/2

APPROVED FOR RELEASE: 03/13/2001 CIA-RDP86-00513R001136120004-3"

"APPROVED FOR RELEASE: 03/13/2001 CIA-RDP86-00513R001136120004-3

L 15739-66
ACC NR: AP6000901

modified pulsed installation described by A. A. Galkin and A. P. Koroliyuk (PTE no. 6, 99, 1960). The excitation was by means of X-cut crystal plates with natural frequencies 11 and 17 Mc, respectively. The dependence of the intensity of the ferroacoustic resonance on the angle between the magnetic field and the wave vector showed the theoretically expected minimum at 90° and a maximum near 50°. To check whether the residual interaction at 0 and 90° is due to incomplete saturation of the sample, special pole pieces were used to modify the field configuration. These pole pieces reduced the field by decreasing the demagnetizing component of the field. The authors also measured the velocity of the longitudinal ultrasonic waves, the damping coefficient, and the acoustic Q. These were found to be 7.15 x 10^5 cm/sec, 0.18 cm^{-1}, and 10^4, respectively. The idea of using the pole pieces is due to A. G. Gurevich. Orig. art. has: 2 figures.

SUB CODE: 20/ SUBM DATE: 26Jul65/ OTHR REF: 004/ OTH REF: 007

Card 2/2

APPROVED FOR RELEASE: 03/13/2001 CIA-RDP86-00513R001136120004-3"

"APPROVED FOR RELEASE: 03/13/2001 CIA-RDP86-00513R001136120004-3

L 07104-67 EWT(1)/EWT(m)/EWP(t)/ETI/EWP(k) IJP(c) JD/JG

ACC NR: AP6029118 SOURCE CODE: UR/0048/66/030/006/0998/1001

49
G

AUTHOR: Smolenskiy, G.A.; Nasyrov, A.

ORG: none

TITLE: Spin-phonon interaction in yttrium ferrite (excitation of magnetoelastic waves by ultrasound) [Report, All-Union Conference on the Physics of Ferro- and Antiferromagnetism held 2-7 July 1965 in Sverdlovsk]

SOURCE: AN SSSR. Izvestiya. Seriya fizicheskaya, v. 30, no. 6, 1966, 998-1001

TOPIC TAGS: yttrium compound, ferrite, single crystal, ultrasonic absorption, magnetic effect, magnetic field effect, spin phonon interaction

ABSTRACT: The authors have investigated the effect of the magnitude and direction of an external magnetic field on the absorption at room temperature of longitudinal ultrasonic waves with frequencies from 50 to 220 MHz propagating parallel to the 110 axis in yttrium ferrite single crystals. The ultrasound was introduced and detected 7.5 mm long cylindrical or parallelepipedonal specimens. Resonance absorption of the ultrasound was observed at a magnetic field strength that varied approximately linearly with the frequency. This absorption is ascribed to production of magnetoelastic vibrations as a result of spin-phonon interaction. The strength of the absorption was investigated as a function of the angle θ in the (100) plane between the external magnetic field and the wave vector of the ultrasound. Maximum absorption was found

Card 1/2

APPROVED FOR RELEASE: 03/13/2001 CIA-RDP86-00513R001136120004-3"

"APPROVED FOR RELEASE: 03/13/2001 CIA-RDP86-00513R001136120004-3

L 07104-67

ACC NR: AP6029118

near $\theta = 50^{\circ}$ and minimum absorption, at $\theta = 0$ and $\theta = 90^{\circ}$; this is in agreement with the theory of B.Kh.Ishmukhametov (Fiz. metallov i metallovedeniye, 17, 323 (1964)). The critical saturation field (the sum of the anisotropy field and the demagnetizing field) and the corresponding critical frequency were calculated; the critical frequency was of the order of 2×10^{9} Hz. The propagation velocity of longitudinal ultrasound in the specimens was 7.15×10^{5} cm/sec, and the acoustic Q factor was 10^{4} at 185 MHz. Orig. art. has: 2 formulas and 6 figures.

SUB CODE: 20 SUBM DATE: 00 ORIG. REF: 003 OTH REF: 006

Card 2/2

APPROVED FOR RELEASE: 03/13/2001 CIA-RDP86-00513R001136120004-3"

"APPROVED FOR RELEASE: 03/13/2001 CIA-RDP86-00513R001136120004-3

NASYROV, A.Kh. (Moskva)

Natural vibrations of plates and circular cylindrical shells reinforced by stiffening ribs. Stroi.mekh. i rasch.soor. 7 no.5:42-46 '65. (MIRA 18:10)

APPROVED FOR RELEASE: 03/13/2001 CIA-RDP86-00513R001136120004-3"

"APPROVED FOR RELEASE: 03/13/2001 CIA-RDP86-00513R001136120004-3

34933
S/119/62/000/003/004/009
D201/D303

13,1530

AUTHOR: Nasyrov, A.M.

TITLE: Dynamic error of acceleration meters

PERIODICAL: Priborostroyeniye, no. 3, 1962, 10 - 12

TEXT: The author evaluates the dynamic error of an acceleration meter when the acting accelerations either increase linearly (in piece-wise approximation) or have the shape of triangular pulses. In the case of linear approximation (linear increase of acceleration from 0 to τ and constant acceleration after $t \geqslant \tau$) the max. meter error at $t \geqslant \tau$ is derived as the simplified

$$\Delta x_{max} = -\frac{a_0}{\omega_0^3 \tau} e^{-\frac{\delta}{\omega_1}\left(\pi - \operatorname{arc\,tg} \frac{\omega_1}{\delta}\right)},$$

where a_0 - the constant value of acceleration at $t \geqslant \tau$; δ - attenuation coefficient; ω_0 - frequency of free oscillations of the in-

Card 1/3

APPROVED FOR RELEASE: 03/13/2001 CIA-RDP86-00513R001136120004-3"

"APPROVED FOR RELEASE: 03/13/2001 CIA-RDP86-00513R001136120004-3

strument; $\omega_1 = \sqrt{\omega_0 - o^2}$. If the spacing between the increasing acceleration pulses is large, (the acceleration pulse has the shape of a triangle, with max. acceleration value a_0 at time τ_1 and falling to zero at $\tau_1 + \tau_2$), the max. value of the dynamic relative error of the instrument α is determined by

$$\alpha = \frac{\Phi(r)}{2\pi\beta}, \qquad (6)$$

where r - the damping coefficient and β - the ratio of the time of increase of acceleration to the period of free oscillations of the instrument. The analysis of the function $\Phi(r, \gamma)$ shows that for $\gamma = 0$, corresponding to increasing acceleration, $\Phi(r)$ has the form of a monotonically increasing function and with r varying from 0 to 1 $\Phi(r)$ takes the values from 1 to 2. For $\gamma > 0$ $\Phi(r, \gamma)$ has always higher values than those of $\Phi(r, 0)$, which means that the dynamic error during the time of decreasing acceleration is greater than that during the increasing acceleration of the same duration. The

APPROVED FOR RELEASE: 03/13/2001 CIA-RDP86-00513R001136120004-3"

"APPROVED FOR RELEASE: 03/13/2001 CIA-RDP86-00513R001136120004-3

Dynamic error of acceleration meters

S/119/62/000/003/004/009
D201/D303

analysis also shows that when $\gamma = 0$ and $r \sim 0.6 - 0.7$, $\Delta(r)$ may be taken as equal to $2r$. In this case in piece-wise approximation of the acceleration change the dynamic error may be taken simply as $\alpha = r/\pi p$. There are 3 figures and 2 Soviet-bloc references.

Card 3/3

APPROVED FOR RELEASE: 03/13/2001 CIA-RDP86-00513R001136120004-3"

"APPROVED FOR RELEASE: 03/13/2001 CIA-RDP86-00513R001136120004-3

NASYROV, A. Z.

NASYROV, A. Z. -- "Independent Work of Pupils on Mathematics Assignments in the Fifth through Tenth Calsses." Academy of Pedagogical Sciences RSFSR. Sci Res Inst of Teaching Methods. Moscow, 1955. (Dissertation for the Degree of Candidate in Pedagogical Sciences).

So.: Knizhnaya Letopis', No. 2, 1956.

APPROVED FOR RELEASE: 03/13/2001 CIA-RDP86-00513R001136120004-3"

"APPROVED FOR RELEASE: 03/13/2001 CIA-RDP86-00513R001136120004-3

BEKAREVICH, A.N. (Gomel');BERESLAVSKIY, M.D. (Uzhgorod);GROMOV, A.P. (Melekess); DUBINCHUK, Ye.S.;TESLENKO, I.F.(Kiyev);ZOLOTOVITSKIY, Ye.N. (Reutovo); KAZHDAN, B.I. (Leningrad);KLIMENCHENKO, D.V. (Berdyansk);MEL'NIKOV, K.S. (Sterlitamak);MIKHAYLOV, K.F. (Magnitogorsk);NASYROV, A.Z. (Sterlitamak);NEFEDOV, D.I. (Moskva);NOVOSELOV, S.I. (Moskva);PRAVILOV, B.R. (s.Kanino Ryazanskoy obl.);PRINTSEV, N.A.(Kursk);SIMONOVICH, A.F. (Sverdlovsk)

Discussion of the plans for the programs. Mat. v shkole no.6:5-28 N-D '59. (MIRA 13:3)

(Mathematics--Study and teaching)

APPROVED FOR RELEASE: 03/13/2001 CIA-RDP86-00513R001136120004-3"

"APPROVED FOR RELEASE: 03/13/2001 CIA-RDP86-00513R001136120004-3

NASYROV, B.; SHCHEKIN, V.A., zasl. deyatel' nauki i tekhniki Uzbekskoy SSR, prof., spets. red.; BESSONOV, M.P., red.; BAKHTIYAROV, A., tekhn. red.

[Karakul sheep on state farms in Uzbekistan] Karakulevodstvo v sovkhozakh Uzbekistana. Tashkent, Gosizdat UzSSR, 1962. 133 p. (MIRA 16:5)

(Uzbekistan—Karakul sheep)

APPROVED FOR RELEASE: 03/13/2001 CIA-RDP86-00513R001136120004-3"

"APPROVED FOR RELEASE: 03/13/2001 CIA-RDP86-00513R001136120004-3

ACCESSION NR: AP4018370 S/0120/64/000/001/0085/0087

AUTHOR: Nasy*rov, F.; Sokovishin, V. A.

TITLE: Resolution of an argon ionization chamber with an admixture of water vapor

SOURCE: Pribory* i tekhnika eksperimenta, no. 1, 1964, 85-87

TOPIC TAGS: ionization chamber, argon ionization chamber, argon ionization chamber resolution, argon water vapor chamber resolution, argon water vapor ionization chamber

ABSTRACT: A grid-type pulse ionization chamber was filled with argon at 2 atm with a water-vapor admixture at a partial pressure of 2.3 to 0.5 torr (temperatures -8 to -24C). This combination yielded the highest resolution for a chamber having no collimating or focusing devices. The chamber voltage was 1 kv, with 25% of it on the grid. Variations within 0.8 - 1.2 kv, as well as

Card 1/2

APPROVED FOR RELEASE: 03/13/2001 CIA-RDP86-00513R001136120004-3"

"APPROVED FOR RELEASE: 03/13/2001 CIA-RDP86-00513R001136120004-3

ACCESSION NR: AP4018370

increasing the pressure to 3 atm, had little effect. Decreasing the pressure to 1 atm with a corresponding increase in the interelectrode separations resulted in some impairment to the resolving power. The pulse-height distribution of alpha-particles Pu^{233} and Pu^{239} with half-widths of the principal maxima of 42 and 50 kev, respectively, is reported. The conclusion is drawn that "the presence in argon of a considerable admixture of H_2O (up to 0.15%) does not impair, but rather improves the chamber characteristics." Orig. art. has: 3 figures.

ASSOCIATION: none

SUBMITTED: 07Mar63 DATE ACQ: 18Mar64 ENCL: 00

SUB CODE: NS NO REF SOV: 001 OTHER: 003

Card 2/2

APPROVED FOR RELEASE: 03/13/2001 CIA-RDP86-00513R001136120004-3"

"APPROVED FOR RELEASE: 03/13/2001 CIA-RDP86-00513R001136120004-3

ACCESSION NR: AP4036531

S/0089/64/016/005/0449/0451

AUTHOR: Nasy*rov, F.

TITLE: Specific ionization along the path of U sup 235 and Cm sup 244 fission fragments

SOURCE: Atomnaya energiya, v. 16, no. 5, 1964, 449-451

TOPIC TAGS: fission fragment ionization, uranium 235 fragment, curium 244 fragment

ABSTRACT: This study refers to specific ionization along the fragment path in a mixture of argon and CH_4(5%). U^{235} fragments were the result of thermal neutron bombardment, while Cm^{244} fragments were the result of spontaneous fission. Measurements were made with the aid of a special telescope consisting of ten ionization chambers separated one from another by wire screens (meshes 5 mm square, wire 0.1 mm diam). The collecting electrodes had a diameter of 0.5 mm. From all fragments there were selected those coinciding with the telescope axis of the chambers and reaching chamber #10 at which pulses were collected. The amplitude of impulse V_i in the n-th chamber was proportional to the number of ion

Card 1/2

APPROVED FOR RELEASE: 03/13/2001 CIA-RDP86-00513R001136120004-3"

"APPROVED FOR RELEASE: 03/13/2001 CIA-RDP86-00513R001136120004-3

ACCESSION NR: AP4036531

pairs formed by a fragment over length unit $dn/dR\ V_i = (dn/dR)_i \Delta Re/C$ where ΔR = distance between screens (30mm); e = electron charge; C = electric capacitance of the chamber including amplifier input. It was found that at equal velocities the charge of a most probable heavy fragment is on an average higher than that of a light fragment. However, the fragment velocity determines the threshhold below which electrons are not present. Orig. art. has: 4 figures, 3 formulas, no tables.

ASSOCIATION: None

SUBMITTED: 14Oct63 DATE ACQ: 03Jun64 ENCL: 00

SUB CODE: NP NO REF SOV: 008 OTHER: 000

Card 2/2

APPROVED FOR RELEASE: 03/13/2001 CIA-RDP86-00513R001136120004-3"

"APPROVED FOR RELEASE: 03/13/2001 CIA-RDP86-00513R001136120004-3

L 43835-65 EWT(m)/EPF(n)-2/EWP(t)/EWP(b)/EWA(h) Pu-4 IJP(c) JD/WW/JG/DM

ACCESSION NR: AP5005811 S/0089/65/018/002/0181/0183

AUTHOR: Malinkin, A. A.; Nasyrov, F.; Kolesov, V. F.

TITLE: Characteristics of asymptotic neutron spectrum in uranium

SOURCE: Atomnaya energiya, v. 18, no. 2, 1965, 181-183

TOPIC TAGS: uranium fission, neutron spectrum, asymptotic spectrum, fission cross section, diffusion length

ABSTRACT: The purpose of the investigation was to determine more precisely the characteristics of the asymptotic neutron spectrum in natural uranium. Measurements were made of the fission cross sections of U^{235} and U^{238}, and of other spectral indicators. In addition, a direct measurement was made of the neutron spectrum in the energy region up to 0.95 MeV. The measurements were made with a spherical critical assembly with an active zone of U^{235} (90% enrichment) in a uranium reflector 30 cm thick. The reaction cross sections were measured at a distance of 65 cm from the boundary of the active zone and not less than 32 cm from its external boundaries. The neutron spectrum was measured at a point where

Card 1/4

APPROVED FOR RELEASE: 03/13/2001 CIA-RDP86-00513R001136120004-3"

"APPROVED FOR RELEASE: 03/13/2001 CIA-RDP86-00513R001136120004-3

L 48836-65
ACCESSION NR: AP5005811

0

it reached its equilibrium state. The values obtained for the various cross sections, for the diffusion length, and for the cross section ratios are listed in Fig. 1 of the Enclosure, and the asymptotic neutron spectrum is shown in Fig. 2 of the Enclosure. The results agree within 10% with those obtained by others. Orig. art. has: 1 figure and 2 tables.

ASSOCIATION: None

SUBMITTED: 08Feb64 ENCL: 02 SUB CODE: NP

NR REF SOV: 001 OTHER: 006

Card 2/4

APPROVED FOR RELEASE: 03/13/2001 CIA-RDP86-00513R001136120004-3"

"APPROVED FOR RELEASE: 03/13/2001 CIA-RDP86-00513R001136120004-3

L 2225-66 EWT(m)/EWA(h) DM

ACCESSION NR: AP5023763 UR/0020/65/019/003/0244/0250
539.173.8

44,55 44,55

AUTHOR: Nasyrov, F.; Rostovtsev, A. A.; Il'in, Yu. I.; Linev, S. V.

44,55 44,55

25
B

TITLE: Track distribution of specific ionization as a function of the initial energy of fission fragments of U super 235

19,44,55

SOURCE: Atomnaya energiya, v. 19, no. 3, 1965, 244-250

TOPIC TAGS: thermal neutron, nuclear fission, uranium, ionization

ABSTRACT: Using a telescope consisting of 11 pulse ionization chambers and a two-dimensional pulse-height analyzer, the authors measured the distribution of specific energy loss by ionization in Ar + CH_4 (5%) over the track as a function of the initial energy of the fission fragments. Fission fragments of U^{235} produced by thermal neutrons were studied in the 70 - 115.5 MEV range (light fragments) and 34 - 88 MEV (heavy fragments). The data obtained served to formulate relations between the specific ionization and the velocity of the fission fragments. These relations indicate certain differences in the nature of the ionization energy losses of the light and heavy fragments. Orig. art. has: 7 figures.

CARD 1/2

APPROVED FOR RELEASE: 03/13/2001 CIA-RDP86-00513R001136120004-3"

"APPROVED FOR RELEASE: 03/13/2001 CIA-RDP86-00513R001136120004-3

L 2225-66

ACCESSION NR: AP5025763

0

ASSOCIATION: None

SUBMITTED: 21Aug64 ENCL: 00 SUB CODE: NP

NO REF SOV: 006 OTHER: 007

CARD 2/2

APPROVED FOR RELEASE: 03/13/2001 CIA-RDP86-00513R001136120004-3"

"APPROVED FOR RELEASE: 03/13/2001 CIA-RDP86-00513R001136120004-3

ACC NR: AP6013495

UR/0120/66/000/002/0064/0065

AUTHOR: Nasyrov, F.; Pashkin, N.F.

ORG: None

TITLE: Ionization chamber for the registration of fission fragments at a high alpha activity background

SOURCE: Pribory i tekhnika eksperimenta no. 2, 1966, 64-65

TOPIC TAGS: nuclear fission, pulse generator, oscilloscope, ionization chamber, fast response ionization chamber, fission registration chamber, distributed amplifier / UR-4 distributed amplifier, pulse generator / E5-19 pulse generator, oscilloscope / OS-4 oscilloscope

ABSTRACT: This paper describes a fast (25 nsec) response ionization chamber for the registration of fission fragments, developed to effect an improvement over current designs with a pulse rise time of about 100 nsec. The faster response is achieved by an interlocking wire mesh electrode arrangement limiting electron trajectories to about 5 mm; by lower pressure of the filling gas; and by locating the fission sample as a thin film deposit at the middle, on the inside of the chamber walls. At 200 - 250 torr pressure of the CH_4 gas filling and an electron gathering potential of 500 volts, the fission pulse amplitude was about 3 mv and the pulse rise time about 25 nsec. Satisfactory camera characteristics were obtained from samples of Cm^{224} and Pu^{239} with respective alpha activities of 3.10^7 and 8.10^7 sec^{-1}, inspite of a high alpha background.

Card 1/2

UDC: 539.1.074

APPROVED FOR RELEASE: 03/13/2001 CIA-RDP86-00513R001136120004-3"

"APPROVED FOR RELEASE: 03/13/2001 CIA-RDP86-00513R001136120004-3

ACC NR: AP6013495

Chamber-initiated pulses were investigated by a circuit comprising a wide band preamplifier and a distributed amplifier, UR-4, which had its 20 nsec rise time confirmed by a pulse generator G5-19 with 7 nsec pulse rise fronts. Oscilloscope S-4 was used to display the pulses for photography. A theory of chamber response is given. Orig. art. has: 3 figures, 1 formula.

SUB CODE: 18, 20, 09 SUBM DATE: 05Apr65 ORIG REF: 002 OTH REF: 004

Card 2/2

APPROVED FOR RELEASE: 03/13/2001 CIA-RDP86-00513R001136120004-3"

"APPROVED FOR RELEASE: 03/13/2001 CIA-RDP86-00513R001136120004-3

NASYROV, G.A.

Hypersensitization with mercury vapors. Izv.AN Turk.SSR no.3: 96 '55. (MLRA 9:5)

1. Institut fiziki i geofiziki AN Turkmenskoy SSR.
(Astronomical photography)

APPROVED FOR RELEASE: 03/13/2001 CIA-RDP86-00513R001136120004-3"

"APPROVED FOR RELEASE: 03/13/2001 CIA-RDP86-00513R001136120004-3

83804

S/035/59/000/003/016/039
A001/A001

6.4700

Translation from: Referativnyy zhurnal, Astronomiya i Geodeziya, 1959, No 3, p. 42, # 1957

AUTHOR: Nasyrov, G. A.

TITLE: Radar Determinations of Meteoric Activity in July-September 1957 at Ashkhabad

PERIODICAL: Izv. AN TurkmSSR, 1957, No. 6, p. 100

TEXT: This is a report on radar determinations of meteoric activity carried out by the scientific workers of the Institut fiziki i geofiziki (Institute of Physics and Geophysics) of AS TurkmSSR. The work was conducted according to the plan of IGY. A station operated at a wavelength of 4.2 m was briefly described. The observations showed that the maximum number of meteors were on August 10-15, 1957, which fact should be ascribed to the Perseid stream. The diurnal variation curve has a minimum at about 14^h of local solar time and maxima in the mornings and evenings.

B. T.

Translator's note: This is the full translation of the original Russian abstract.

Card 1/1

APPROVED FOR RELEASE: 03/13/2001 CIA-RDP86-00513R001136120004-3"