"APPROVED FOR RELEASE: 06/15/2000 CIA-RDP86-00513R001239720006-1

ALEKSANDROVICH, Kh.M.; PAVLYUCHENKO, M.M.

Effect of certain reagents on the dispersion of clayey substances in aqueous solutions. Dokl. AN BSSR 6 no.12:780-783 D '62. (MIRA 16:6)

1. Institut obshchey i neorganicheskoy khimii AN BSSR.

APPROVED FOR RELEASE: 06/15/2000 CIA-RDP86-00513R001239720006-1"

"APPROVED FOR RELEASE: 06/15/2000 CIA-RDP86-00513R001239720006-1

KAPUTSKIY, F.N.; PAVLYUCHENKO, M.M.; YERMOLENKO, I.N.

Effect of the nature of solvent on the reaction of cellulose with nitrogen dioxide. Vysokom.soed. 5 no.1:75-78 Ja '63. (MIRA 16:1)

1. Belorusskiy gosudarstvennyy universitet im. V.I.Lenina i Institut obshchey i neorganicheskoy khimii AN Belorusskoy SSR.
(Cellulose) (Nitrogen oxide) (Solvents)

APPROVED FOR RELEASE: 06/15/2000 CIA-RDP86-00513R001239720006-1"

"APPROVED FOR RELEASE: 06/15/2000 CIA-RDP86-00513R001239720006-1

ALEKSANDROVICH, Kh.M.; PAVLYUCHENKO, M.M.

Effect of macroscopic defects in natural potassium minerals on their gravity seperation. Dokl. AN BSSR 7 no.10:684-587 O '63. (MIRA 16:11)

1. Institut obshchey i neorganicheskoy khimii AN BSSR.

APPROVED FOR RELEASE: 06/15/2000 CIA-RDP86-00513R001239720006-1"

"APPROVED FOR RELEASE: 06/15/2000 CIA-RDP86-00513R001239720006-1

PAVLYUCHENKO, M.N. [Pauliuchenka, M.N.]; MEDVEDEVA, A.P. [Miadzvedzeva, A.P.]

Interaction of iron hydroxide and clay particles in KCl and NaCl saturated solutions. Vestsi AN BSSR.Ser.khim.nav no.2:25-29 '65.

Kinetics of clarification of clay suspensions in saturated solutions of KCl and NaCl by the action of flocculating agents. Ibid.:30-34 (MIRA 18:1)

APPROVED FOR RELEASE: 06/15/2000 CIA-RDP86-00513R001239720006-1"

"APPROVED FOR RELEASE: 06/15/2000 CIA-RDP86-00513R001239720006-1

PAVLYUCHENKO, N.Ya.; BARSUKOV, M.F., red.

[Representing the roghness of part surfaces on drawings; manual on the drawing of working sketches in a course of mechanical drawing] Oboznachenie na chertezhakh sherokhovatosti poverkhnostei detalei; uchebnoe posobie k vypolneniiu rabochikh chertezhei detalei v kurse mashinostroitel'nogo chercheniia. Leningrad, Leningr. tekhnologicheskii in-t, 1964. 48 p. (MIRA 18:7)

APPROVED FOR RELEASE: 06/15/2000 CIA-RDP86-00513R001239720006-1"

"APPROVED FOR RELEASE: 06/15/2000 CIA-RDP86-00513R001239720006-1

ZAGURSKIY, V.I., kand.tekhn.nauk; PAVLYUCHENKO, O.L.

High-speed machining of taper keys. Mashinostroitel' no.11:34 N '62. (MIRA 15:12)
(Keys and keyways (Steelwork))
(Turning)

APPROVED FOR RELEASE: 06/15/2000 CIA-RDP86-00513R001239720006-1"

"APPROVED FOR RELEASE: 06/15/2000 CIA-RDP86-00513R001239720006-1

SPIVAK, G.V.; IVANOV, R.D.; PAVLYUCHENKO, O.P.; SEDOV, N.N.; SHVETS, V.F.

Visualization of a magnetic sound-recording field by means of an electron mirror. Izv. AN SSSR. Ser. fiz. 27 no.9:1210-1218 S '63. (MIRA 16:9)

1. Fizicheskiy fakul'tet Moskovskogo gosudarstvennogo universiteta im. M.V.Lomonosova.

(Electron optics) (Magnetic fields)

APPROVED FOR RELEASE: 06/15/2000 CIA-RDP86-00513R001239720006-1"

"APPROVED FOR RELEASE: 06/15/2000 CIA-RDP86-00513R001239720006-1

PAVLYUCHENKO, N.Ya.

Some shortcomings in standards. Standartizatsiia 29 no.2:43-44 F '65. (MIRA 18:4)

APPROVED FOR RELEASE: 06/15/2000 CIA-RDP86-00513R001239720006-1"

"APPROVED FOR RELEASE: 06/15/2000 CIA-RDP86-00513R001239720006-1

ACC NR: AP6015774 (A, N) SOURCE CODE: UR/0048/66/030/005/0817/0822

AUTHOR: Pavlyuchenko, O. P.; Petrov, V. I.

ORG: Physics Department, Moscow State University im. M.V.Lomonosov (Fizicheskiy fakul'tet Moskovskogo gosudarstvennogo universiteta)

TITLE: On the distinctive features of electron-optical systems for observation of magnetic microfields by the transmission technique [Report, Fifth All-Union Conference on Electron Microscopy held in Sumy 6-8 July 1965]

SOURCE: AN SSSR. Izvestiya. Seriya fizicheskaya, v. 30, no. 5, 1966, 817-822

TOPIC TAGS: electron microscopy, electron microscope, magnetic domain structure, magnetic field

ABSTRACT: The authors discuss the measures to be taken to record with good resolution the domain structure of thin ferromagnetic films by the electron transmission (shadow) technique with the aid of one of the following Soviet electron microscopes: EM-3, EM-5, EM-7, UEM-100, and UEMV-100. To record domain structure one must either employ off-center apertures or baffles, or work with the microscope out of focus; only defocused operation is discussed in the present paper. Increasing the defocusing increases the sensitivity for recording weak magnetic fields but reduces the resolution. To obtain good resolution with the shadow technique it is important to make the diameter of the electron beam at the object as small as possible. This can be accomplished by reduc-

Card 1/2

APPROVED FOR RELEASE: 06/15/2000 CIA-RDP86-00513R001239720006-1"

"APPROVED FOR RELEASE: 06/15/2000 CIA-RDP86-00513R001239720006-1

ACC NR: AP6015774

ing the diameter of the aperture and/or by increasing the power of the condenser lens. Different measures are indicated in employing different microscopes. It is desirable to protect the object from the magnetic field of the objective lens; this can be accomplished by increasing the distance of the object from the lens and simultaneously reducing the power of the lens. How this is best accomplished in the different microscopes is discussed briefly. The paper closes with a few remarks on stroboscopic operation and preparation of thin films. A number of electron micrographs of magnetized Permalloy films recorded under different conditions are presented. The authors thank G.V.Spivak for a valuable discussion. Orig. art. has: 6 figures.

SUB CODE: 20/ SUBM DATE: 00/ ORIG REF: 001/ OTH REF: 010

Card 2/2

APPROVED FOR RELEASE: 06/15/2000 CIA-RDP86-00513R001239720006-1"

"APPROVED FOR RELEASE: 06/15/2000 CIA-RDP86-00513R001239720006-1

L 50964-65 EWT(1)/EPA(s)-2/EWT(m)/EWP(i)/T/EWP(t)/EEC(b)-2/EWP(b) Pt-7/Pi-4
IJP(c) JD/GG

ACCESSION NR: AP5011445 UR/0048/65/029/004/0626/0628

43
41
B

AUTHOR: Pavlyuchenko, O. P.; Spivak, G. V.; Shakmanov, V. V.

21

TITLE: Concerning thin films prepared by cathod sputtering of ferrites /Report, Second All-Union Symposium on the Physics of Thin Ferromagnetic Films held in Irkutsk, 10-15 July 1964/

III

SOURCE: AN SSSR. Izvestiya. Seriya fizicheskaya, v. 29, no. 4, 1965, 626-628

TOPIC TAGS: ferromagnetic thin film, ferrite, cathode sputtering

18

ABSTRACT: In view of the fact that cathode sputtering has been reported (G. V. Spivak, I.G.Sirotenko, and R.D.Ivanov, Izv. AN SSSR, Ser. fiz. 25, 581, 1961) to conserve the exact chemical composition of the initial material, this technique was employed to prepare films of the monoferrites $NiO \cdot Fe_2O_3$, $CuO \cdot Fe_2O_3$ and $CoO \cdot Fe_2O_3$. The resultant films were investigated to determine their structural and magnetic properties, which properties were then compared with those of the parent materials. Debye x-ray patterns were recorded to determine the crystal structure of the starting ferrites. The films were deposited on polished glass and on cleaved NaCl. Films of optimum thickness (300 Å) were examined in a transmis-

Card 1/2

APPROVED FOR RELEASE: 06/15/2000 CIA-RDP86-00513R001239720006-1"

"APPROVED FOR RELEASE: 06/15/2000 CIA-RDP86-00513R001239720006-1

L 50964-65

ACCESSION NR: AP5011445

2

sion electron microscope; in addition, electron diffraction patterns were recorded. Some of the diffraction patterns and micrographs are reproduced. The sputtering was realized in a setup with a thermal cathode providing an intense (about 3 A) discharge in xenon at a pressure of 5×10^{-3} torr. The specimen was connected at the third electrode. In view of their high resistance the ferrite specimens were coated on one side with silver to provide good electrical contact. Some thermal effects were noted, so that in general the film specimens were not identical in structure and parameters with the parent materials. The magnetic properties of the ferrite films were investigated in more detail by Galepov, who presented a report on the subject at the Irkutsk Symposium. Orig. art. has: 3 figures.

ASSOCIATION: Fizicheskiy fakul'tet Moskovskogo gosudarstvennogo universiteta im. M. V. Lomonosova (Moscow State University)

SUBMITTED: 00 ENCL: 00 SUB CODE: EM, SS

NR REF SOV: 001 OTHER: 001

Card 2/2

APPROVED FOR RELEASE: 06/15/2000 CIA-RDP86-00513R001239720006-1"

"APPROVED FOR RELEASE: 06/15/2000 CIA-RDP86-00513R001239720006-1

L 37120-66 E..T(1)/E..T(m)/T/EWI(t)/ETI IJP(c) JD/GG

ACC NR: AP6015769 (A,N) SOURCE CODE: UR/0048/66/030/005/07 3/0798

AUTHOR: Spivak, G. V.; Pavlyuchenko, O. P.; Petrov, V. I.

ORG: Physics Department, Moscow State University im. M.V.Lomonosov (Fizicheskiy fakul'tet Moskovskogo gosudarstvennogo universiteta)

TITLE: Electron microscopic observation of domain structure dynamics in magnetic films /Report, Fifth All-Union Conference on Electron Microscopy held in Sumy 6-8 July 1965/

SOURCE: AN SSSR. Izvestiya. Seriya fizicheskaya, v. 30, no. 5, 1966, 793-798

TOPIC TAGS: electron microscope, ferromagnetic film, magnetic domain structure, stroboscope

ABSTRACT: Alterations in the domain structure of ferromagnetic films during rapid magnetization switching have been observed with a stroboscopic electron microscope. The present paper is devoted to a brief discussion of the technique. A cross section diagram of the electron transmission microscope employed in the investigations is shown in the figure. The magnetizing unit was similar to that of E.Fuchs and W.Liesk (Optik, 19, 307 (1962)); it was supplied with alternating current, and the windings were made to form part of a resonant circuit in order to increase the magnetizing field. Only four of the windings were employed because full compensation of the motion

Card 1/3

APPROVED FOR RELEASE: 06/15/2000 CIA-RDP86-00513R001239720006-1"

"APPROVED FOR RELEASE: 06/15/2000 CIA-RDP86-00513R001239720006-1

L 37120-66

ACC NR: AP6015769

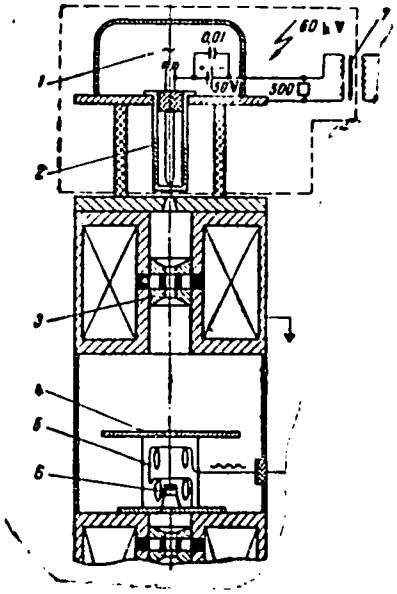

Cross section of the stroboscopic electron transmission microscope. 1 - electron gun; 2 - gate; 3 - condenser lens; 4 - shield; 5 - magnetizing unit; 6 - specimen holder; 7 - isolating pulse transformer.

of the image was not required with stroboscopic operation. The microscope was operated ordinarily in the defocused condition. The electron beam was normally cut off by a 50 V potential applied to the gating electrode 2, and was turned on by a 60 V 0.5 microsec strobe pulse. The high cut off voltage was found to be necessary to prevent transmission during the off phase of the cycle of a low current of exceptionally high energy electrons, which led to considerable deterioration of the image. It was found that the stability of the domain structure from cycle to cycle that is requisite for stroboscopic observation obtains only at low switching fields, wherein the switching takes place by reversible domain wall displacement. The sharpness of the stroboscopic photographs depended strongly on the duty factor, the required exposure becoming excessive at low duty factors. By reducing the magnification, operating the microscope in

Card 2/3

APPROVED FOR RELEASE: 06/15/2000 CIA-RDP86-00513R001239720006-1"

"APPROVED FOR RELEASE: 06/15/2000 CIA-RDP86-00513R001239720006-1

L 37110-66

ACC NR: AP6015769

the focused condition, increasing the accelerating potential to 60 kV, and increasing the pulse current to 1 mA, it was possible to record at a duty factor of 2.5 x 10^{-5} with an exposure only an order of magnitude longer than is required with normal operation under static conditions. Several photographs of the domain structures of Permalloy films are presented, which illustrate the resolution achieved and show the motions of the domain walls during a portion of the magnetization cycle. It is concluded that a stroboscopic electron transmission microscope can be employed to investigate the variations of the domain structure of thin ferromagnetic films during magnetization switching under conditions when the processes involved are reversible, and that the sharpness of the image depends on the stroboscopic duty factor and on the stability of the domain configurations from cycle to cycle. Orig. art. has: 6 figures.

SUB CODE: 20/ SUBM DATE: 00/ ORIG REF: 001/ OTH REF: 005

Card 3/3

APPROVED FOR RELEASE: 06/15/2000 CIA-RDP86-00513R001239720006-1"

"APPROVED FOR RELEASE: 06/15/2000 CIA-RDP86-00513R001239720006-1

L 36561-66 EWT(1)/EWT(m)/T/EWP(t)/ETI IJP(c) JD/HW

ACC NR: AP6015773 (A, N) SOURCE CODE: UR/0048/66/030/005/0813/0816

AUTHOR: Spivak, G.V.; Pavlyuchenko, O.P.; Luk'yanov, A.Ye.

ORG: Physics Department, Moscow State University im. M.V.Lomonosov (Fizicheskiy fakul'tet Moskovskogo gosudarstvennogo universiteta)

TITLE: Imaging of magnetic microfields in an electron mirror microscope /Report, Fifth All-Union Conference on Electron Microscopy held in Sumy 6-8 July 1965/

SOURCE: AN SSSR. Izvestiya. Seriya fizicheskaya, v. 30, no. 5, 1966, 813-816

TOPIC TAGS: electron microscopy, electron reflection, magnetic domain structure, electric field, magnetic field

ABSTRACT: The imaging of ferromagnetic domain structures by means of an electron mirror microscope has been investigated with magnetic plumbite and cobalt single crystals and with an artificial sample consisting of a stack of 0.1 mm thick ferromagnetic sheets separated by equally thick copper sheets. When the ferromagnetic sheets in the artificial sample were magnetized in alternate directions to represent Bloch walls the electron images of the edges of the sheets were wedge-shaped with alternate wedges opening in opposite directions. This is ascribed to a shift of the image due to the action of the magnetic field at the surface of the specimen on the imaging electrons, the shift being a linear function of distance from the optic axis. Analogous spike-

Card 1/2

APPROVED FOR RELEASE: 06/15/2000 CIA-RDP86-00513R001239720006-1"

"APPROVED FOR RELEASE: 06/15/2000 CIA-RDP86-00513R001239720006-1

L 36561-66

ACC NR: AP6015773

like images were obtained of the domain walls on the (0001) face of the cobalt crystal. In this case, however, the boundaries of the spikes were not straight lines but very complex sinuous curves. This is ascribed to the influence of electric microfields at the surface of the specimen, and it is concluded that to record magnetic domain structure with the mirror microscope one must take measures to avoid the presence of such fields. The sensitivity of the electron mirror microscope to domain walls was found to be dependent on the orientation of the walls with respect to the optic axis, the sensitivity being greatest when the walls are oriented radially. The similarity of the electron micrographs to the actual domain structure as well as the anisotropy of the sensitivity is illustrated by comparison of electron micrographs of the surface of a magnetic plumbite crystal with photomicrographs of the corresponding powder patterns. Orig. art. has: 6 figures.

SUB CODE: 20/ SUBM DATE: 00/ ORIG REF: 004/ OTH REF: 001

Card 2/2 mlp

APPROVED FOR RELEASE: 06/15/2000 CIA-RDP86-00513R001239720006-1"

"APPROVED FOR RELEASE: 06/15/2000 CIA-RDP86-00513R001239720006-1

SPIVAK, G.V.; IVANOV, R.D.; PAVLYUCHENKO, O.P.; SEDOV, N.N.

Formation of contrast in mirror-type, emission, and scanning electron-optical systems. Izv. AN SSSR. Ser. fiz. 27 no.9: 1139-1146 S '63. (MIRA 16:9)

1. Fizicheskiy fakul'tet Moskovskogo gosudarstvennogo universiteta im. Lomonosova.

(Electron microscope)

APPROVED FOR RELEASE: 06/15/2000 CIA-RDP86-00513R001239720006-1"

"APPROVED FOR RELEASE: 06/15/2000 CIA-RDP86-00513R001239720006-1

SPIVAK, G. V.; PAVLYUCHENKO, G. P.; IVANOV, R. I.; NETISHENSKAYA, G. I.

"Die Struktur des Magnetfeldes innerhalb der Domanenwand, mit Hilfe des Spiegelelektronenmikroskopes sichtbar gemacht."

report submitted to 3rd European Regional Conf, Electron Microscopy, Prague, 26 Aug - 3 Sep 64.

APPROVED FOR RELEASE: 06/15/2000 CIA-RDP86-00513R001239720006-1"

"APPROVED FOR RELEASE: 06/15/2000 CIA-RDP86-00513R001239720006-1

[illegible]TOVA, [illegible]Ye.; [illegible]YTK[illegible], [illegible].K.; [illegible], F.A., kand. ek[illegible]. nauk, red.

[Tambov; an economic geography essay] Tambov; ekonomiko-geograficheskii ocherk. Moskva, Geogr. ob-vo Soiuza SSR pri AN SSSR, 196[illegible]. 121 p. (MIRA 17:9)

APPROVED FOR RELEASE: 06/15/2000 CIA-RDP86-00513R001239720006-1"

"APPROVED FOR RELEASE: 06/15/2000 CIA-RDP86-00513R001239720006-1

PAVLYUCHENKO, P.I., kand.med.nauk

Experimental study of the glycogen balance in the cornea after alkali burns of the eye under various treatment methods. Vest. oft. 76 no.1:52-56 Ja-F'63. (MIRA 16:6)

1. Mezhrayonnoye glaznoye otdeleniye, Druzhkovka Donetskoy oblasti.
(BURNS AND SCALDS) (GLYCOGEN)
(CORNEA--WOUNDS AND INJURIES)

APPROVED FOR RELEASE: 06/15/2000 CIA-RDP86-00513R001239720006-1"

"APPROVED FOR RELEASE: 06/15/2000 CIA-RDP86-00513R001239720006-1

PAVLYUCHENKO, P.I.

Changes in the marginal looped network and carbohydrate metabolism of the cornea following alkali burns treated by various methods. Vest.oft. 71 no.1:39-44 Ja-F '58. (MIRA 11:3)

1. Zaveduyushchiy glaznym otdeleniyem gorodskoy bol'nitsy g. Druzhkovki Stalinskoy oblasti. Kafedra glaznykh bolezney (zav.-prof. I.F.Kopp) i kafedra biokhimii (zav.-prof. A.O.Voynar) Stalinskogo meditsinskogo instituta.

(CORNEA, wounds and injuries
exper. alkali burns in rabbits, pathol. & healing in various treatments)

(BURNS, exper.
cornea, alkali burns in rabbits, pathol. & healing in various treatments)

APPROVED FOR RELEASE: 06/15/2000 CIA-RDP86-00513R001239720006-1"

"APPROVED FOR RELEASE: 06/15/2000 CIA-RDP86-00513R001239720006-1

PAVLYUCHENKO, P. I., Cand Med Sci (diss) -- "A clinical and experimental study of burns to the eyes caused by alkalis". Stalino, 1959. 20 pp (Stalino Med Inst, Chair of Eye Diseases, Chair of Biochem), 250 copies (KL, No 15, 1960, 140)

APPROVED FOR RELEASE: 06/15/2000 CIA-RDP86-00513R001239720006-1"

"APPROVED FOR RELEASE: 06/15/2000 CIA-RDP86-00513R001239720006-1

BEL'CHIKOV, M.Ye.; NOLIKOV, N.F.; PAVLYUCHENKO, S.G.

Improvement of flotation at the Sukhodol'skoye Central Coal Preparation Plant. Ugol' 40 no.9:67-71 S '65. (MIRA 18:10)

1. Ukrainskiy proyektno-konstruktorskiy i nauchno-issledovatel'skiy institut po obogashcheniyu i briketirovaniyu ugley (for Bel'chikov). 2. Sukhodol'skaya tsentral'naya uglebogatitel'naya fabrika (for Nolikov, Pavlyuchenko).

APPROVED FOR RELEASE: 06/15/2000 CIA-RDP86-00513R001239720006-1"

"APPROVED FOR RELEASE: 06/15/2000 CIA-RDP86-00513R001239720006-1

YUDIN, S.Ye.

Rare case of strangulated hernia in a child. Pediatriia no. 77-78 Ap '57. (MIRA 10:10)

1. Iz khirurgicheskogo otdeleniya 1-y gorodskoy bol'nitsy Stavropolya (zav. - kandidat meditsinskikh nauk I.I.Bulynin, zam. glavnogo vracha N.K.Aseyeva)
(HERNIA)

APPROVED FOR RELEASE: 06/15/2000 CIA-RDP86-00513R001239720006-1"

"APPROVED FOR RELEASE: 06/15/2000 CIA-RDP86-00513R001239720006-1

PAVLYUCHENKO, S.Ye. (Stavropol' (krayevoy), ul. Moskovskaya, d.45)

Unusual injury of the spleen. Nov.khir.arkh. no.3:81 My-Je '57. (MLRA 10:8)

1. Khirurgicheskoye otdeleniye (zav. - kand.med. nauk I.I. Bulynin) 1-y Stavropol'skoy gorodskoy bol'nitsy
(SPLEEN--WOUNDS AND INJURIES)

APPROVED FOR RELEASE: 06/15/2000 CIA-RDP86-00513R001239720006-1"

"APPROVED FOR RELEASE: 06/15/2000 CIA-RDP86-00513R001239720006-1

PAVLYUCHENKO, S.Ye.

Treatment of fresh infected wounds with chloramine B in dispensaries. Ortop.travm. i protez. 17 no.6:66-67 N-D '56. (MLRA 10:2)

1. Iz Stavropol'skogo travmatologicheskogo kabineta (zav. S.A. Krylova) stantsii skoroi pomoshchi (glavnyy vrach - P.S.Trusov)

(CHLORAMINES, tehr. use
B, in fresh infected wds.)
(WOUNDS AND INJURIES, ther.
chloramine B in fresh infected wds)

APPROVED FOR RELEASE: 06/15/2000 CIA-RDP86-00513R001239720006-1"

"APPROVED FOR RELEASE: 06/15/2000 CIA-RDP86-00513R001239720006-1

PAVLYUCHENKO, V.

Cable-belt conveyers. Sov.shakht. 11 no.2:15 F '62. (MIRA 15:1)
(Conveying machinery)

APPROVED FOR RELEASE: 06/15/2000 CIA-RDP86-00513R001239720006-1"

"APPROVED FOR RELEASE: 06/15/2000 CIA-RDP86-00513R001239720006-1

Pavlyuchenko V.I

USSR/Electronics - Electron Tubes, H-5

Abst Journal: Referat Zhur - Fizika, No 12, 1956, 35130

Author: Kozlovskiy, K. N., Pavlyuchenko, V. I.

Institution: None

Title: On the Choice of Suppressor-Grid Voltage for Pentode Used in the Shembel' Circuit

Original Periodical: Sb. statey nauch. stud. o-va Mosk. energ. in-t., 1955, No 8, 151-162

Abstract: None

Card 1/1

APPROVED FOR RELEASE: 06/15/2000 CIA-RDP86-00513R001239720006-1"

"APPROVED FOR RELEASE: 06/15/2000 CIA-RDP86-00513R001239720006-1

LIPKIN, A.Ye.; PAVLYUCHENKO, V.I.; MELYUKOV, A.I. (Krasnoyarsk)

Results of entrance examinations in mathematics at Krasnoyarsk institutions of higher learning. Mat. v shkole no.4:27-29 Jl-Ag '61. (MIRA 14:8)
(Krasnoyarsk--Universities and colleges--Entrance requirements)

APPROVED FOR RELEASE: 06/15/2000 CIA-RDP86-00513R001239720006-1"

"APPROVED FOR RELEASE: 06/15/2000 CIA-RDP86-00513R001239720006-1

PAVLYUCHENKO, V.M.

Sable and squirrel of the East Siberian taiga. Priroda 47 no.8:104-105 Ag '58. (MIRA 11:9)

1.Mamsko-Chuyskoye promyslovo-okhotnich'ye khozyaystvo, Irkutskaya oblast'.
(Serberia, Eastern--Sables) (Siberia, Eastern--Squirrels)

APPROVED FOR RELEASE: 06/15/2000 CIA-RDP86-00513R001239720006-1"

"APPROVED FOR RELEASE: 06/15/2000 CIA-RDP86-00513R001239720006-1

AUTHOR: Pavlyuchenko, V.M. SOV-26-58-8-26/51

TITLE: The Sable and the Squirrel in East Siberian Forests (Sobol' i belka v vostochno-sibirskoy tayge)

PERIODICAL: Priroda, 1958, Nr 8, pp 104-105 (USSR)

ABSTRACT: The frequency of the sable and the squirrel in the various parts of Siberia is of interest since the squirrel is the principal food of the sable. Investigations were undertaken in the basins of the rivers Mama and Bol'shaya Chuya of the Irkutsk Oblast'. It has been found that sables abound in cedar forests. The frequency of the squirrel is the highest in the same areas. The stomach content of sables killed in cedar forests was investigated. It contained a high percentage of squirrels. It has been also found that the male sable daily covers 10.1 km on its hunting trips whereas the female sable makes only 5.9 km.

ASSOCIATION: Mamsko-Chuyskoye promyslovo-okhotnich'ye khozyzystvo (Mama-Chuya Trading and Hunting Farm)

1. Sables--Siberia 2. Squirrels--Siberia

Card 1/1

APPROVED FOR RELEASE: 06/15/2000 CIA-RDP86-00513R001239720006-1"

"APPROVED FOR RELEASE: 06/15/2000 CIA-RDP86-00513R001239720006-1

PAVLYUCHENKO, Yu.M., inzh.

Universal scaffold for the repair and fitting-out of ships in floating docks. Sudostroenie 30 no.5:52-53 My '64. (MIRA 17:6)

APPROVED FOR RELEASE: 06/15/2000 CIA-RDP86-00513R001239720006-1"

"APPROVED FOR RELEASE: 06/15/2000 CIA-RDP86-00513R001239720006-1

PAVLYUCHENKOV, A.

~~Determining~~ the effectiveness of new machinery in the grain milling industry. Muk.-elev.prom. 24 no.3:14-15 Mr '58. (MIRA 12:9)

1. Odesskiy tekhnologicheskiy institut im. I.V.Stalina.
(Grain-milling machinery)

APPROVED FOR RELEASE: 06/15/2000 CIA-RDP86-00513R001239720006-1"

"APPROVED FOR RELEASE: 06/15/2000 CIA-RDP86-00513R001239720006-1

PAVLYUCHENKOV, A., LEVCHENKO, E., elektromekhanik

Winches are performing better. Mor. f. 25 no. [illegible]
(MIRA 18:[illegible])

1. Gruppovoy elektromekhanik Baltiyskogo parokhodstva (for Pavlyuchenkov). 2. Tap'akhod "Stanislavskiy" (for Levchenko).

APPROVED FOR RELEASE: 06/15/2000 CIA-RDP86-00513R001239720006-1"

"APPROVED FOR RELEASE: 06/15/2000 CIA-RDP86-00513R001239720006-1

PAVLYUCHENKOV, A.K.; BERCHENKO, N.E.

Indices of business accounting operations in mixed feed mills. Izv. vys. ucheb. zav.; pishch. tekh. no.4:7-12 '61. (MIRA 14:8)

1. Odesskiy tekhnologicheskiy institut imeni I.V.Stalina, kafedra ekonomiki promyshlennosti.
(Feed mills--Accounting)

APPROVED FOR RELEASE: 06/15/2000 CIA-RDP86-00513R001239720006-1"

"APPROVED FOR RELEASE: 06/15/2000 CIA-RDP86-00513R001239720006-1

PAVLYUCHENKOV, A.K.

Production capacity and disproportions among the groups of machines in flour mills. Izv.vys.ucheb.zav., pishch.tekh. no.4:14-17 '62. (MIRA 15:11)

1. Odesskiy tekhnologicheskiy institut im. M.V.Lomonosova, kafedra ekonomiki promyshlennosti.
(Flour mills--Equipment and supplies)

APPROVED FOR RELEASE: 06/15/2000 CIA-RDP86-00513R001239720006-1"

"APPROVED FOR RELEASE: 06/15/2000 CIA-RDP86-00513R001239720006-1

PAVLYUCHENKOV, A.K.

Calculation of the production capacity of flour mills. Izv. vys.ucheb.zav.; pishch.tekh. no.4:3-8 '59. (MIRA 13:2)

1. Odesskiy tekhnologicheskiy institut imeni I.V.Stalina. Kafedra ekonomiki promyshlennosti.
(Flour mills)

APPROVED FOR RELEASE: 06/15/2000 CIA-RDP86-00513R001239720006-1"

"APPROVED FOR RELEASE: 06/15/2000 CIA-RDP86-00513R001239720006-1

PAVLYUCHENKOV, Aleksandr Kuz'mich; KOCHETKOV, L.I., red.; GOLUBKOVA, L.A., tekhn.red.

[Ways of improving the utilization of fixed capital in grain milling enterprises] Puti uluchsheniia ispol'zovaniia osnovnykh fondov mukomol'nykh predpriiatii. Moskva, Izd-vo tekhn.i ekon.lit-ry po voprosam mukomol'no-krupianoi, kombikormovoi promyshl. i elevatorno-skladskogo khoz., 1959. 34 p. (MIRA 13:1)

(Flour mills)

APPROVED FOR RELEASE: 06/15/2000 CIA-RDP86-00513R001239720006-1"

"APPROVED FOR RELEASE: 06/15/2000 CIA-RDP86-00513R001239720006-1

PAVLYUCHENKOV, V.S.

Excursions for the study of farm production; from the experience of certain schools in the Molotov province. Est. v shkole no.4:84-90 Jl-Ag '53. (MLRA 6:6)

1. Molotovskiy pedagogicheskiy institut.
(Molotov province--Agriculture)

APPROVED FOR RELEASE: 06/15/2000 CIA-RDP86-00513R001239720006-1"

"APPROVED FOR RELEASE: 06/15/2000 CIA-RDP86-00513R001239720006-1

L 6407-66 EWT(d)/EWT(m)/EWP(f)/T-2/EWA(c) WE

ACC NR: AP5026823 SOURCE CODE: UR/0286/65/000/017/0100/0101

INVENTOR: Budyko, Yu. I.; Koganer, V. E.; Dukhnin, Yu. V.; Lisitsyn, A. I.; Mal'tsev, A. V.; Pavlyuchenkov, V. V.

TITLE: Fuel-injection system for internal-combustion engines. Class 46, No. 174468 [Announced by the Central Scientific-Research and Design Institute for Fuel Equipment for Automotive and Stationary Engines (Tsentral'nyy nauchno-issledovatel'skiy i konstruktorskiy institut toplivnoy apparatury avtotraktornykh i statsionarnykh dvigateley)]

SOURCE: Byulleten' izobreteniy i tovarnykh znakov, no. 17, 1965, 100-101

TOPIC TAGS: internal combustion engine, fuel dispersant, fuel injection, fuel injector, engine fuel system

ABSTRACT: An Author Certificate has been issued for a fuel-injection system (see Fig. 1) for internal-combustion engines, which contains plunger-pump sections, suction lines connected to a fuel tank or booster pump, injection lines connected to nozzles, electromagnetic metering devices, and an electronic control unit. For improved uniformity and accuracy in distributing fuel under all engine operating conditions, the electromagnetic metering devices are installed along the suction lines

Card 1/2 UDC: 621.43.038.3

APPROVED FOR RELEASE: 06/15/2000 CIA-RDP86-00513R001239720006-1"

"APPROVED FOR RELEASE: 06/15/2000 CIA-RDP86-00513R001239720006-1

0901 1733

L 6407-66

ACC NR: AP5026823

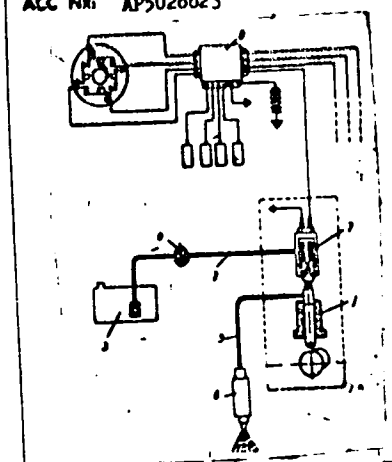

Fig. 1. Fuel-injection system

1 - Plunger-pump section; 2 - suction line; 3 - fuel tank; 4 - booster pump; 5 - injection line; 6 - nozzle; 7 - electromagnetic metering device; 8 - electronic control unit.

of the plunger-pump sections. These devices provide for fuel metering at low pressures. Orig. art. has: 1 figure. [LB]

SUB CODE: PR, GO/ SUBM DATE: 18Jul64/ ATD PRESS: 4181

Card 2/2

APPROVED FOR RELEASE: 06/15/2000 CIA-RDP86-00513R001239720006-1"

"APPROVED FOR RELEASE: 06/15/2000 CIA-RDP86-00513R001239720006-1

38206
S/109/62/007/005/007/021
D266/D307

9,4210

AUTHORS: Gershteyn, G.M., Lalov, V.V., and Pavlyuchuk, V.A.

TITLE: Simulation of the space harmonic spectrum of high frequency field of periodic structures

PERIODICAL: Radiotekhnika i elektronika, v. 7, no. 5, 1962, 816 - 825

TEXT: The paper is divided into two parts, one is concerned with the measurement of static space harmonics and the other with their relationship to high frequency space harmonics. In the experiments some previous ideas of one of the authors (G.M. Gershteyn and A.V. Khokhlov, Radiotekhnika i elektronika, 1959, 4, 12, 2040; G.M. Gershteyn, Izv. vuzov MVO SSSR (Radiofizika), 1959, 2, 4, 602; G.M. Gershteyn and A.V. Khokhlov, ZhTF, 1960, 30, 5, 480) are utilized, which establish correspondence between the space harmonics of the field and temporal harmonics of an induced current obtained by an ordinary spectrum analyzer. The models investigated were multiply connected periodical structures consisting of rods of arbitrary form. The potential distribution on the elements corresponded to

Card 1/2

APPROVED FOR RELEASE: 06/15/2000 CIA-RDP86-00513R001239720006-1"

"APPROVED FOR RELEASE: 06/15/2000 CIA-RDP86-00513R001239720006-1

Pavlyuchuk K, A. I

REZVOV, K.N., kand. tekhn. nauk, dots.; PAVLYUCHUK, A.I., inzh.

Increasing labor productivity in machining holes in flat parts. Sbor. st. LITMO no.23:23-30 '57. (MIRA 11:5)
(Drilling and boring)

APPROVED FOR RELEASE: 06/15/2000 CIA-RDP86-00513R001239720006-1"

"APPROVED FOR RELEASE: 06/15/2000 CIA-RDP86-00513R001239720006-1

PAVLYUCHUK, A.I., inzh.; REZVOV, K.M., kand. tekhn. nauk, dots.

Checking basic design and geometrical parameters of screwed broaches. Sbor. st. LITMO no.23:112-120 '57. (MIRA 11:5)
(Broaching machines)

APPROVED FOR RELEASE: 06/15/2000 CIA-RDP86-00513R001239720006-1"

"APPROVED FOR RELEASE: 06/15/2000 CIA-RDP86-00513R001239720006-1

KOSHUROV, B.V., kand. tekhn. nauk; PAVLYUCHUK, A.I.; TAYTS, Ye.I.; FEDOTOV, A.I.; VAKSER, D.B., red.; FREGER, D.P., red.izd-va; BELOGUROVA, I.A., tekhn. red.

[Use of diamond tools in the manufacture of machinery] Primenenie almaznogo instrumenta v mashinostroenii; stenogramma lektsii. Leningrad, Leningr. dom nauchno-tekhn. propagandy, 1963. 30 p. (MIRA 16:7)
(Diamonds, Industrial) (Metal cutting)

APPROVED FOR RELEASE: 06/15/2000 CIA-RDP86-00513R001239720006-1"

"APPROVED FOR RELEASE: 06/15/2000 CIA-RDP86-00513R001239720006-1

REZVOV, K.M., kand.tekhn.nauk; PAVLYUCHUK, A.I.; VOLOGZHANINOV, N.I.; SHKOL'NIK, A.M.; PANIN, G.I.; YAKOVLEV, I.S.

Plastic carburetor floats. Avt.prom. no.2:26-27 F '60. (MIRA 13:5)

1. Filial Gosudarstvennogo soyuznogo ordena Trudovogo Krasnogo Znameni nauchno-issledovatel'skogo avtomobil'nogo i avtomotornogo instituta po toplivnoy apparature.
(Automobiles--Engines--Carburetors)

APPROVED FOR RELEASE: 06/15/2000 CIA-RDP86-00513R001239720006-1"

"APPROVED FOR RELEASE: 06/15/2000 CIA-RDP86-00513R001239720006-1

PAVLYUCHUK, A. I., Candidate Tech Sci (diss) -- "Investigation of the working of small-diameter deep openings with better than first-class precision on the parts of precision couplings". Leningrad, 1959. 31 pp (Main Admin of Sci Res and Design Organizations of the Gosplan USSR, Central Order of Labor Red Banner Sci Res Automobile and Motor Inst NAMI, Affiliate for the Fuel Apparatus of Tractor and Stationary Engines), 200 copies (KL, No 24, 1959, 139)

APPROVED FOR RELEASE: 06/15/2000 CIA-RDP86-00513R001239720006-1"

"APPROVED FOR RELEASE: 06/15/2000 CIA-RDP86-00513R001239720006-1

PAVLYUCHUK, A.I., assistent

Fine finishing of high-precision small holes by honing with cermet diamond bars. Izv.vys.ucheb.zav.; prib. no.5:100-108 '58. (MIRA 12:6)

1. Leningradskiy institut tochnoy mekhaniki i optiki.
(Grinding and polishing)

APPROVED FOR RELEASE: 06/15/2000 CIA-RDP86-00513R001239720006-1"

"APPROVED FOR RELEASE: 06/15/2000 CIA-RDP86-00513R001239720006-1

PAVIYUCHUK, A.I., kand.tekhn.nauk; YAKOVLEV, I.S.

Using gun-drill tips in machining plunger sleeves of diesel engine fuel equipment on automatic multispindle lathes. Avt.prom. 29 no.12:36-40 D '63. (MIRA 17:4)

1. TSentral'nyy nauchno-issledovatel'skiy i konstruktorskiy institut toplivnoy apparatury avtotraktornykh i statsionarnykh dvigateley.

APPROVED FOR RELEASE: 06/15/2000 CIA-RDP86-00513R001239720006-1"

"APPROVED FOR RELEASE: 06/15/2000 CIA-RDP86-00513R001239720006-1

PAVLYUCHUK, A.I.

Using cermet bars with diamond filling in precision honing of small-diameter holes. Avt. prom. no.4:36-39 Ap '59. (MIRA 12:5)

1.Filial Nauchno-issledovatel'skogo avtomobil'nogo i avtomotornogo instituta po toplivnoy apparature.
(Drilling and boring)

APPROVED FOR RELEASE: 06/15/2000 CIA-RDP86-00513R001239720006-1"

"APPROVED FOR RELEASE: 06/15/2000 CIA-RDP86-00513R001239720006-1

S/113/60/000/005/004/004
D264/D301

AUTHORS: Rezvov, K.M., Pavlyuchuk, A.I., Candidates of Technical Sciences, Panin, G.I., Vologzhaninov, N.I., Shkol'nik, A.M., Yakovlev, I.S. and Volkov, L.I

TITLE: Thermal high frequency welding of plastic carburettor floats

PERIODICAL: Avtomobil'naya promyshlennost', no. 5, 1960, 41-43

TEXT: TsNITA has developed a device for the thermal high-frequency welding of carburettor floats made of polycaprolactam. Plain thermal welding was tried but failed to give a reliable hermetic seal. Gluing gave a good seal but required a prolonged drying time. The device (Fig. 3) consists of an ЛГА-1 (LGD-1) high-frequency generator and a semi-automatic welding machine. The use of 2 generator tubes gives a power of 1kwt and a working frequency of 25 Mc. Power from the electric motor 4 is transmitted via a gear train and screw gear to the coaxially mounted cams 5 and 6. The spindle 1 derives its reciprocation from cam 6, while cam 5 serves to trim off the

Card 1/3

APPROVED FOR RELEASE: 06/15/2000 CIA-RDP86-00513R001239720006-1"

"APPROVED FOR RELEASE: 06/15/2000 CIA-RDP86-00513R001239720006-1

outer beading and eject the welded float from the bottom punch 3. Welding is regulated by adjusting the gap between the top and bottom punches 2 and 3 (by adjusting the carriage 7) and by varying the feed-back inductance. The punch faces must be positioned in parallel, with a divergence of not more than 0.02-0.03 mm. The punches are also set to ensure the formation of a slight beading of the seam inside the float, since this makes for greater hermeticity. Welding time varies from 5 to 12 seconds, depending on the float size. The method is recommended for introduction in Soviet automobile plants. There are 3 diagrams.

ASSOCIATION: Tsentral'nyy nauchno-issledovatel'skiy i konstruktorskiy institut toplivnoy apparatury avtotraktornykh i statsionarnykh dvigateley (Central Scientific Research and Design Institute for the Fuel Apparatus of Automotive and Stationary Engines)

APPROVED FOR RELEASE: 06/15/2000 CIA-RDP86-00513R001239720006-1"

"APPROVED FOR RELEASE: 06/15/2000 CIA-RDP86-00513R001239720006-1

S/113/60/000/003/004/004
D264/D301

Thermal high frequency welding...

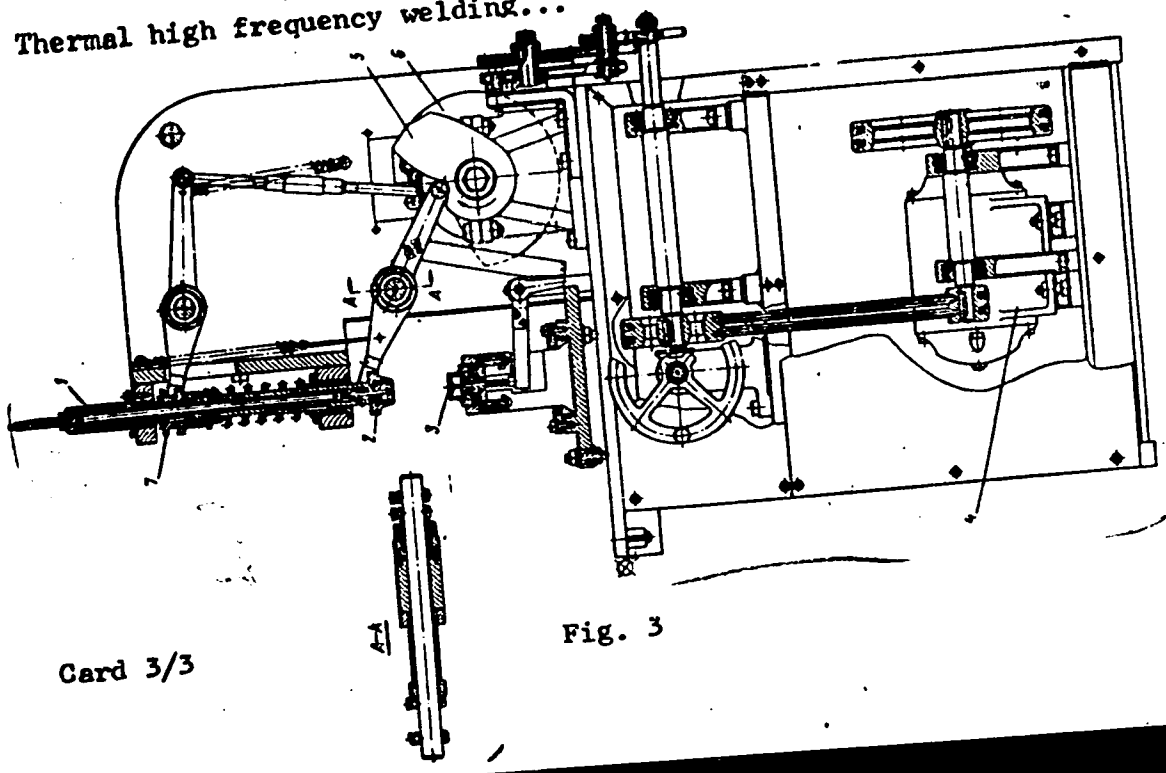

Fig. 3

Card 3/3

APPROVED FOR RELEASE: 06/15/2000 CIA-RDP86-00513R001239720006-1"

"APPROVED FOR RELEASE: 06/15/2000 CIA-RDP86-00513R001239720006-1

22(7) SOV/113-59-4-13/19

AUTHOR: Pavlyuchuk, A.I.

TITLE: The Honing of Deep, Small-Diameter High-Precision Holes By Diamond-Filled Metalloceramic Hones

PERIODICAL: Avtomobil'naya promyshlennost', 1959, Nr 4, pp 36-38 (USSR)

ABSTRACT: The finishing of high-precision holes of 5-10 mm diameter and 5-10 mm length with a class 1 accuracy or higher is usually done manually on vertical finishing machines using special abrasive pastes. This process is time consuming, connected with a number of difficulties and its productivity is low. Honing is a more modern method of surface finishing, but because of the low mechanical strength of the hones, it was not possible to install honing machines on automatic lines. The author mentions that diamond-containing hones are described in foreign literature which provide a productivity increase of 20-30%. The discovery of large diamond fields in Yakutiya caused an increase of the diamond utilization by Soviet industry and therefore, the application of diamond tools becomes important for mass production in the automo-

Card 1/3

APPROVED FOR RELEASE: 06/15/2000 CIA-RDP86-00513R001239720006-1"

"APPROVED FOR RELEASE: 06/15/2000 CIA-RDP86-00513R001239720006-1

SOV/113-59-4-17/18

The Honing of Deep, Small-Diameter High-Precision Holes By Diamond - Filled Metalloceramic Hones

bile industry. The author conducted an investigation concerning the application of diamond hones. He describes the preparation of the hones, the influence of the diamond concentration in the hone on the accuracy of the finish, the influences of diamond grain size, operating conditions, and various other factors affecting the productivity of the honing process. In his conclusions, the author states that the diamond concentration should not be below 100-200% at an operating speed of 15-30 m/min. Metalloceramic hones with large diamond grains should be used for preliminary honing, while hones with fine grains should be used for the final processing. Compared to conventional hones, the wear resistance of diamond hones is 250 times higher. The specific productivity of diamond hones, concerning the consumption of pure diamonds, is 100 times higher than the specific productivity of corundum hones. There is 1 diagram, 4 photographs, 4 graphs, 4 tables and 3 references, 2 of which are Soviet, and 1 German.

Card 2/3

APPROVED FOR RELEASE: 06/15/2000 CIA-RDP86-00513R001239720006-1"

"APPROVED FOR RELEASE: 06/15/2000 CIA-RDP86-00513R001239720006-1

SOV/113-59-4-13/11

The Honing of Deep, Small-Diameter High-Precision Holes By Diamond-Filled Metalloceramic Hones

ASSOCIATION: Filial NII I po toplivnoy apparature (NII I Department of Fuel Equipment).

Card 3/3

APPROVED FOR RELEASE: 06/15/2000 CIA-RDP86-00513R001239720006-1"

"APPROVED FOR RELEASE: 06/15/2000 CIA-RDP86-00513R001239720006-1

CHUDAKOV, N. G., PAVLYUCHUK, A. K.

Numerical Functions

Summatory functions of characters of number groups with finite base., Trudy Mat. inst., no. 38, 1951.

9. Monthly List of Russian Accessions, Library of Congress, May 1952. 1953, Uncl.

APPROVED FOR RELEASE: 06/15/2000 CIA-RDP86-00513R001239720006-1"

"APPROVED FOR RELEASE: 06/15/2000 CIA-RDP86-00513R001239720006-1

PAVLYUCHUK A.I.

VOLOSATOV, V.A.; PAVLYUCHUK, A.I., inshener

Deep drawing and clipping of hollow objects in one operation. Vest. mash.35 no.8:48-50 Ag'55. (MLRA 8:10)
(Deep drawing (Metal work))

APPROVED FOR RELEASE: 06/15/2000 CIA-RDP86-00513R001239720006-1"

"APPROVED FOR RELEASE: 06/15/2000 CIA-RDP86-00513R001239720006-1

PAVLYUCHUK, A.K.

Mathematical Reviews
Vol. 15 No. 2
Feb. 1954
Number Theory

Čudakov, N. G., and Pavlyučuk, A. K. On summation functions of characters of numerical groups with a finite basis. Trudy Mat. Inst. Steklov., v. 38, pp. 366-381. Izdat. Akad. Nauk SSSR, Moscow, 1951. (Russian) 20 rubles.

Suppose $\mathfrak{G}$ is a multiplicative group of positive algebraic numbers with a finite basis $\omega_1, \omega_2, \cdots, \omega_p$, where we assume $\omega_k > 1$ for $k = 1, 2, \cdots, p$. Let $\mathfrak{S}$ be the semigroup generated by $\omega_1, \omega_2, \cdots, \omega_p$. Suppose χ is a (not necessarily bounded) character of $\mathfrak{G}$, that is a homomorphism of $\mathfrak{G}$ into the multiplicative group of non-zero complex numbers. Let H be the function defined on the non-negative real numbers by the formula $H(x) = \sum_{\alpha \in \mathfrak{S}, \alpha \leq x} \chi(\alpha)$. Suppose $\sigma_0 = \max_{1 \leq k \leq p} (\log|\chi(\omega_k)|)/(\log \omega_k)$ and q is the number of values of k for which $\sigma_0 = (\log|\chi(\omega_k)|)/(\log \omega_k)$. Then the authors prove the following assertions about the behavior of $H(x)$ as $x \to \infty$. (1) If $\sigma_0 < 0$, then $H(x)$ is bounded. (2) If $\sigma_0 = 0$, $q = 1$, and $\chi(\omega_k) \neq 1$ for all k, then $H(x)$ is bounded. (3) If $\sigma_0 = 0$ and $\chi(\omega_k) = 1$ for some k, then $H(x) = \Omega(x)$. (4) If $\sigma_0 = 0$ and $q \geqq 2$, then $H(x) = \Omega((\log \log \log x)^{\frac{1}{2}})$. (5) If $\sigma_0 > 0$, then $H(x) = \Omega(x^{-1} e^{\sigma_0 x})$. Although (1) and (2) are almost trivial, the proofs of (3), (4), and (5) require delicate methods from analytic number theory due to Vinogradov, Gelfond, and Linnik. A particular case of the above is a result of Čudakov and Linnik [Doklady Akad. Nauk SSSR (N.S.) 74, 193-196 (1950); these Rev. 12, 393] to the effect that if $\mathfrak{G}$ is a multiplicative subgroup of the positive rationals generated by a finite set $\mathfrak{P}$ of prime numbers and if χ is a bounded character of $\mathfrak{G}$, then $H(x)$ is bounded if and only if $\mathfrak{P}$ contains exactly one prime number and χ is not the principal character of $\mathfrak{G}$. *P. T. Bateman.*

APPROVED FOR RELEASE: 06/15/2000 CIA-RDP86-00513R001239720006-1"

"APPROVED FOR RELEASE: 06/15/2000 CIA-RDP86-00513R001239720006-1

CHUDAKOV, N. G.; PAVLYUCHUK, A. A.

Numerical Functions

Summatory functions of characters of number groups with finite [illegible], Trudy Mat. inst., no. 3, 1951.

Monthly List of Russian Accessions, Library of Congress, May 1952. [illegible]

APPROVED FOR RELEASE: 06/15/2000 CIA-RDP86-00513R001239720006-1"

"APPROVED FOR RELEASE: 06/15/2000 CIA-RDP86-00513R001239720006-1

S/058/63/000/001/094/120
A160/A101

AUTHORS: Gershteyn, G. M., Pavlyuchuk, V. A.

TITLE: An analysis of the spectrum of the spatial harmonics of the field of periodic systems on induced-current models

PERIODICAL: Referativnyy zhurnal, Fizika, no. 1, 1963, 16 - 17, abstract 1Zh101 ("Dokl. 4-y Mezhvuz. konferentsii po primeneniyu fiz. i matem. modelirovaniya v razlichn. otraslyakh. tekhn. Sb. I". M., 1962, 225 - 236)

TEXT: A method is developed for the experimental analysis of the spectrum of direct and inverse spatial harmonics of periodic structure fields. The method - proposed by one of the authors before (Referativnyy zhurnal, Fizika, no. 6, 1960, 14659) - is based on the transformation of the spatial field harmonics into induced-current time harmonics with an analysis of the latter's spectrum by the conventional spectrum analyzer. A detailed description is given of the experimental installation for plotting a distribution curve of the azimuthal component of the electrical field and the spectra of the spatial harmonics

Card 1/2

APPROVED FOR RELEASE: 06/15/2000 CIA-RDP86-00513R001239720006-1"

"APPROVED FOR RELEASE: 06/15/2000 CIA-RDP86-00513R001239720006-1

L 02292-67 EWT(d) IJP(c)

ACC NR: AR6016558 SOURCE CODE: UR/0196/65/000/012/A009/A009

AUTHOR: Khokhlov, A. V.; Pavlyuchuk, V. A.; Pronin, V. P.

52
B
16

TITLE: Some methods for setting up boundary conditions of the first kind in simulating fields on induced current devices

SOURCE: Ref. zh. Elektrotekhnika i energetika, Abs. 12A63

REF SOURCE: Sb. Vopr. elektrich. modelirovaniya poley. Saratov, Saratovsk.un-t, 1964, 87-98

TOPIC TAGS: induced current, electric analog, Laplace equation, electric field, electric potential

ABSTRACT: The authors consider the principles involved in construction of units for setting up boundary conditions of the first kind when using the induced current method for simulation of Laplace field intensity. The boundary conditions are set by a summing amplifier. The problem of calculating the summing networks is considered in detail and a method is discussed for experimentally determining the boundary conditions without calculating the resistances in the ladder network. The use of a summing device with a differential input is proposed for setting up boundary distributions with potentials of different signs. 5 illustrations, bibliography of 1 title. From the summary. [Translation of abstract]

SUB CODE: 09

Card 1/1 vmb UDC: 537.212;621.3.001.57

APPROVED FOR RELEASE: 06/15/2000 CIA-RDP86-00513R001239720006-1"

"APPROVED FOR RELEASE: 06/15/2000 CIA-RDP86-00513R001239720006-1

GERSHTEYN, G.M.; LALOV, V.V.; PAVLYUCHUK, V.A.

Simulation of the spectrum of the spatial harmonics of the high-frequency field of periodic structures. Radiotekh. i elektron. 7 no.5:816-825 My '62. (MIRA 15:4)

1. Saratovskiy gosudarstvenny, universitet im. N.G.Chernyshevskogo, kafedra radiofiziki.
(Microwaves) (Delay lines)

APPROVED FOR RELEASE: 06/15/2000 CIA-RDP86-00513R001239720006-1"

"APPROVED FOR RELEASE: 06/15/2000 CIA-RDP86-00513R001239720006-1

L 23609-65 EWT(d) LJP(c) MLK

ACCESSION NR: AT5002500 S/0000/64/000/000/0138/0149

AUTHOR: Gershteyn, G.M.; Pavlyuchuk, V.A.

B+1

TITLE: The problem of the automatic derivation of the spectrum of the spatial harmonics of a high-frequency field of periodic systems

14

SOURCE: Analogovyye metody i sredstva resheniya krayevykh zadach (Analog methods and means of solving boundary value problems); trudy Vsesoyuznogo soveshchaniya, Moskva, 1962 g. Kiev, Naukova dumka, 1964, 138-149

TOPIC TAGS: spectroscopy, electro simulation, spatial harmonics, high frequency field, periodic system, induced current model, analog computer

ABSTRACT: The paper describes the most recent development of a new experimental method for the analysis of the spatial harmonics of high-frequency fields of periodic systems by means of induced current models. This method is based on the transformation of the spatial harmonics of a statistical field of periodic systems into the time harmonics of an induced current, with the resulting analysis of the spectrum of the latter by means of an ordinary, low-frequency spectroscope. The method permits automatic recording and photographing of the spectra during a period of a few seconds, as well as rapid analysis of the spectrograms into the associated spectra of the spatial harmonics of

Card 1/2

APPROVED FOR RELEASE: 06/15/2000 CIA-RDP86-00513R001239720006-1"

"APPROVED FOR RELEASE: 06/15/2000 CIA-RDP86-00513R001239720006-1

L 23609-65

ACCESSION NR: AT5002500

a VHF field. Spectra are calculated for the spatial harmonics of the azimuth component of a high-frequency field of a cylindrical or linear system; these spectra are also experimentally derived and photographed using models of these fields and the calculated and experimental values are compared. The comparison confirmed the possibility of applying the indicated method to the automatic derivation and visual observation of spectra of the spatial harmonics of high-frequency fields of decelerated periodic systems with sufficient accuracy for most practical purposes. Orig. art. has: 3 figures, 4 tables and 12 formulas.

ASSOCIATION: none

SUBMITTED: 05Sep64 ENCL: 00 SUB CODE: EC, DP

NO REF SOV: 004 OTHER: 002

Card 2/2

APPROVED FOR RELEASE: 06/15/2000 CIA-RDP86-00513R001239720006-1"

"APPROVED FOR RELEASE: 06/15/2000 CIA-RDP86-00513R001239720006-1

GAVRILENKO, B.P., inzhener; PAVLYUK, A.A., inzhener.

Motorless drive for the "Stalinets-6" combine. Sel'khozmashina no.5: 11-12 My '54. (MLRA 7:5)

1. Spetsial'noye konstruktorskoye byuro zavoda Rostsel'mash.
(Power transmission) (Combines (Agricultural machinery))

APPROVED FOR RELEASE: 06/15/2000 CIA-RDP86-00513R001239720006-1"

"APPROVED FOR RELEASE: 06/15/2000 CIA-RDP86-00513R001239720006-1

BOSOY, Ye.S.; STROKOV, S.A.; PAVLYUK, A.A.

Using shortened knife sections for cutter bars of harvesting machines. Trakt. i sel'khozmash. 31 no.1:20-23 Ja '61. (MIRA 14:1)

1. Rostovskiy institut sel'skokhozyaystvennogo mashinostroyeniya (for Bosoy). 2. Rostovskiy zavod sel'skokhozyaystvennogo mashinostroyeniya (for Pavlyuk).

(Mowing machines)

APPROVED FOR RELEASE: 06/15/2000 CIA-RDP86-00513R001239720006-1"

"APPROVED FOR RELEASE: 06/15/2000 CIA-RDP86-00513R001239720006-1

L 23937-65 EWT(m)/EWP(b)/T/EWP(t) Pad IJP(c) JD/HW
ACCESSION NR: AP5001557 S/0185/64/009/012/1371/1373

AUTHOR: Pavlyuk, A. O.; Petrenko, M. S.; Pervakov, V. O.; Khotkevych, V. G.

TITLE: On some peculiarities of the temperature dependence of the increase of the electrical resistivity of the deformed alloy Fe + 50% Ni at low temperatures

SOURCE: Ukrayins'kyy fizychnyy zhurnal, v. 9, no. 12, 1964, 1371-1373

TOPIC TAGS: resistivity of deformed alloy, martensitic phase formation, ferrous nickel alloy

ABSTRACT: In the iron-nickel alloy with the nickel content below 40%, martensitic transformation is observed on cooling to a sufficiently low temperature. At higher nickel concentrations, this transformation does not take place. However, it can be expected that deformation and cooling will produce in these alloys local formation of martensitic phase. As an indication of the new phase formation, the electrical resistivity was measured (see L. Kaufman and M. Cohen, Trans. Amer. Inst. Min (Metall.) Eng. 206, 1393 (1956)). Fe + 50% Ni alloy was pre-

Card 1/2

APPROVED FOR RELEASE: 06/15/2000 CIA-RDP86-00513R001239720006-1"

"APPROVED FOR RELEASE: 06/15/2000 CIA-RDP86-00513R001239720006-1

L 23937-65
ACCESSION NR: AP5001557

pared in the form of wires of 0.2 mm diem. and pressed between metal plates, and the resistance compared with that of annealed specimens. It was found that in specimens which were deformed and measured at -196 C, the increase of resistivity was noticeably greater than in specimens which were deformed at room temperature and measured at -196 C. This is attributed to local martensitic phase formation. The authors are grateful to Y. L. Mirkin for the Fe-Ni alloy. Orig. art. has: 1 figure

ASSOCIATION: Kharkivs'kyy derzhuniversytet im. O. M. Gor'kogo (Khar'kov State University)

SUBMITTED: 10Jul64 ENCL: 00 SUB CODE: MM

NR REF SOV: 002 OTHER: 007

Card 2/2

APPROVED FOR RELEASE: 06/15/2000 CIA-RDP86-00513R001239720006-1"

"APPROVED FOR RELEASE: 06/15/2000 CIA-RDP86-00513R001239720006-1

L 14998-66 EWT(m)/EWP(w)/T/EWP(t)/EWP(k)/EWP(z)/EWP(b)/EWA(h) IJP(c) JD/HW/JG

ACC NR: AP5028563 (N) SOURCE CODE: UR/0126/65/020/005/0733/0740

AUTHOR: Guterman, M. B.; Mirkin, I. L.; Pavlyuk, A. A.; Pervakov, V. A.; Petrenko, N. S.; Khotkevich, V. I.

ORG: TsNII of Technology and Machine Building, Moscow (TsNII tekhnologii i mashinostroyeniya); Kharkov gosuniversitet im. A. M. Gor'kiy (Khar'kovskiy gosuniversitet)

TITLE: Certain features connected with the K-state in Ni-Cr, Ni-Cr-Mo and Fe-Ni--Cr-Mo alloys

SOURCE: Fizika metallov i metallovedeniye, v. 20, no. 5, 1965, 733-740

TOPIC TAGS: metal physics, ordered alloy, mechanical property, resistivity, nonferrous metal alloy, ferrous alloy, metal heat treatment, heat resistant alloy, high temperature strength, metal hardening

ABSTRACT: Changes in electrical resistivity in Ni + 15% Cr, Ni + 15% Cr + 18% Mo and Fe + 25% Ni + 16% Cr + 6% Mo alloys were studied as a function of low temperature deformation (from +20° to -196°C) and annealing rate (from 2 to 10^6 deg/min). Decomposition of the K-state in the alloys was observed. The effect of the K-state on high temperature strength was also noted. The K-state causes microscopic inho-

Card 1/2 UDC: 539.4.015

APPROVED FOR RELEASE: 06/15/2000 CIA-RDP86-00513R001239720006-1"

"APPROVED FOR RELEASE: 06/15/2000 CIA-RDP86-00513R001239720006-1

L 14998-66
ACC NR: AP5028563

mogeneities which retard the motion of dislocations. In this work, the influence of the decomposition of the K-state was studied in terms of high temperature strength. The temperature dependence of electrical resistivity was obtained as a function of temperature and heating rate. For each alloy, the resistivity increased initially and at 500°C reached a peak, whereupon it dropped to a minimum (about 700° to 900°C depending on the alloy) and rose again. The drop in resistivity was associated with the decomposition of the K-state. Deformation by compression (60 to 70%) in the temperature interval from -196 to +20°C showed that the decomposition of the K-state was practically independent of deformation temperature. At higher temperatures (between 500° and 1000°C) and at high rates of heating, the decomposition of the K-state was studied by increasing the heating rate to 10^6 deg/min. The interval for the maximum decomposition was displaced to higher temperatures (300 to 450° higher), depending on the type of alloy. In the K-state region a significant strengthening was also noted when the speed of deformation was increased from 0.03%/min to 0.3%/min, while in the region of K-state decomposition no effect on strength was apparent. For fast heating rates, the rise in strength was maintained at higher temperatures than for slow heating rates. In particular, for Ni-Cr this region was expanded to 700°C, while for the other alloys to 900 or 1000°C. Where the K-state was decomposed at room temperature, no additional strengthening occurred upon pulse heating. Orig. art. has: 4 figures.

SUB CODE: 11/ SUBM DATE: 06Aug64/ ORIG REF: 011/ OTH REF: 003

Card 2/2

APPROVED FOR RELEASE: 06/15/2000 CIA-RDP86-00513R001239720006-1"

"APPROVED FOR RELEASE: 06/15/2000 CIA-RDP86-00513R001239720006-1

PAVLYUK, A.A. [Pavliuk, A.O.]; PERVAKOV, V.A. [Pervakov, V.O.]; KHOTKEVICH, V.I. [Khotkevych, V.H.]

Effect of an oxygen admixture on the heat capacity of silver. Ukr. fiz. zhur. 10 no.2:237-238 F '65. (MIRA 18:4)

1. Khar'kovskiy gosudarstvennyy universitet.

APPROVED FOR RELEASE: 06/15/2000 CIA-RDP86-00513R001239720006-1"

"APPROVED FOR RELEASE: 06/15/2000 CIA-RDP86-00513R001239720006-1

APPROVED FOR RELEASE: 06/15/2000 CIA-RDP86-00513R001239720006-1"

"APPROVED FOR RELEASE: 06/15/2000 CIA-RDP86-00513R001239720006-1

APPROVED FOR RELEASE: 06/15/2000 CIA-RDP86-00513R001239720006-1"

"APPROVED FOR RELEASE: 06/15/2000 CIA-RDP86-00513R001239720006-1

ACC NR: AP7004339 (A) SOURCE CODE: UR/0106/66/000/011/0075/0078

AUTHOR: Pavlyuk, A. P.

ORG: none

TITLE: Frequency band needed for frequency-type facsimile radio transmission

SOURCE: Elektrosvyaz', no. 11, 1966, 75-78

TOPIC TAGS: facsimile transmission, radio communication

ABSTRACT: According to the regulations of the Radiofrequency Commission, Ministry of Communications, SSSR, the required frequency band for F_4-radiation (facsimile transmission with FM of carrier by pulse photosignals) should be determined from this formula: $B_n = 2KN + 2D$, where N - maximum possible number of white and black elements of the transmitted picture per sec; D - transmitter frequency deviation; K - coefficient (1.5). For a typical case, the above formula would prescribe a bandwidth of 9.6 kc whereas in practice a band of 4--5 kc has been found sufficient. Factual frequency-band requirements of black-and-white and halftone picture transmission are examined, and these new formulas for B_n are deduced:

$$\left.\begin{array}{l} B_n = 2Д + 0{,}855N \text{ for } 0{,}14 < m < 0{,}77 \\ B_n = 2Д + 1{,}23N \text{ for } 0{,}77 < m < 1{,}7 \\ B_n = 2Д + 1{,}3N \text{ for } 1{,}7 < m < 2{,}5 \\ B_n = 2Д + 1{,}5N \text{ for } 2{,}5 < m < 3{,}45 \end{array}\right\}$$

Card 1/2 UDC: 621.397.0

APPROVED FOR RELEASE: 06/15/2000 CIA-RDP86-00513R001239720006-1"

"APPROVED FOR RELEASE: 06/15/2000 CIA-RDP86-00513R001239720006-1

ACC NR: AP7004339

where $m = D/F_m$ is the FM index. The latter formulas yield realistic (much lower) values of the required frequency band. "In conclusion, the author wishes to thank A. S. Vladimirov for his attention to this work and for his valuable comments." Orig. art. has: 1 figure, 8 formulas, and 2 tables.

SUB CODE: 09, 17 / SUBM DATE: 17Jun65 / ORIG REF: 003

Card 2/2

APPROVED FOR RELEASE: 06/15/2000 CIA-RDP86-00513R001239720006-1"

"APPROVED FOR RELEASE: 06/15/2000 CIA-RDP86-00513R001239720006-1

ACC NR: AT7004330

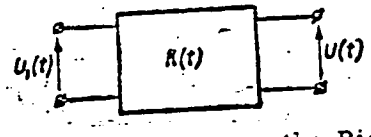

U(t) - sought-for output voltage. It is proven that the transfer ratio based on average values of the input and output voltages can be expressed in terms of the Riemann function. It is further proven that, for an interval $0 < x < \infty$, the Riemann function is periodic with a period equal to unity. This function can be physically interpreted as a closed-feedback-loop automatic control system having many stable states; it was used in developing a precision digital millivoltmeter. Orig. art. has: 3 figures and 4 formulas.

SUB CODE: 09, 12 / SUBM DATE: 14Jul66 / ORIG REF: 001

Card 2/2

APPROVED FOR RELEASE: 06/15/2000 CIA-RDP86-00513R001239720006-1"

"APPROVED FOR RELEASE: 06/15/2000 CIA-RDP86-00513R001239720006-1

L 08119-67 EWT(d)/EWP(1) IJP(c) BB/GG/GD

ACC NR: AT6034429 SOURCE CODE: UR/0000/66/000/000/0118/0121

AUTHOR: Pavlyuk, E. I. (L'vov); Pogrebnoy, V. A. (L'vov)

ORG: none

TITLE: A temperature-stable magnetic-semiconductor balancing circuit for analog-to-digital converters 16

SOURCE: AN UkrSSR. Termostoykiye radiotelemetricheskiye sistemy (Heat resistant radiotelemetering systems). Kiev, Naukova dumka, 1966, 118-121

TOPIC TAGS: analog digital converter, transistorized circuit

ABSTRACT: A balancing circuit with high temperature stability used in analog-to-digital converters is described. The circuit, made with magnetic and silicon semiconductor components, includes a second harmonic magnetic modulator, an LC circuit and an amplifier tuned to the second harmonic, a phase detector with an amplifier, a transistorized key circuit, a square wave generator, and a magnetic frequency doubler. The converter works with an input frequency of 900 cps, and its zero drift does not exceed 10^{-15} v, a figure which corresponds to an input voltage of 0.4 μv at an input impedance of 160 ohms. The converter starting voltage does not exceed 20 μv, and its releasing voltage does not exceed 40 μv. Its maximum operation time is 5 msec, and its operating temperature is -20—100C. The converter uses P104 or P106 transistors. Orig. art. has: 1 figure.

SUB CODE: 09/ SUBM DATE: 05Apr66/ ORIG REF: 003/ ATD PRESS: 5103

Card 1/1 LS

APPROVED FOR RELEASE: 06/15/2000 CIA-RDP86-00513R001239720006-1"

"APPROVED FOR RELEASE: 06/15/2000 CIA-RDP86-00513R001239720006-1

SOV/115-59-2-19/38

9(2)

AUTHOR: Sukhov, S.A., Kaalets, S.Ya., Pavlyuk, G.L.

TITLE: Research into Electrolytic Thermo-Elements (Issledovaniye elektroliticheskoy termopary)

PERIOLICAL: Izmeritel'naya tekhnika, 1959, Nr 2, pp 35-37 (USSR)

ABSTRACT: The authors refer to an article by P.L.Lebedev in Teploenergetika (Thermal Energy), 1956, Nr 4, which states that an electrolytic thermo-element produces the same amount of voltage as a soldered thermo-element of the same metal. However, Lebedev does not state that the voltage is dependent on the thickness of the connecting solder coating. Tests were made with various metals such as copper, nickel and so on. When data on various metals is available, electrolytic thermo-elements may be prepared with any voltage from 0 to $\mathcal{E}$, where $\mathcal{E} = u_1 - u_2$ (u_1 and u_2 = potentials). The electrolytic thermo-element, however, has one drawback, namely, when the joints are damaged (through friction or oxydation),

Card 1/2

APPROVED FOR RELEASE: 06/15/2000 CIA-RDP86-00513R001239720006-1"

"APPROVED FOR RELEASE: 06/15/2000 CIA-RDP86-00513R001239720006-1

Research into Electrolytic Thermo-Elements SOV/115-59-2-19/38

its voltage is reduced. Brittle metals, even if they have excellent thermo-element qualities, should not be used to produce soldered thermo-elements. However, these may be used to make covers for electrolytic thermo-elements. The authors suggest a method for using electrolytic thermo-elements to prepare thermo-piles, by mounting them on a plastic frame, the piles consisting of hundreds and even thousands of electrolytic thermo-elements. Such thermo-piles are, in fact, simply made and highly sensitive. There are 4 diagrams and 1 Soviet reference.

Card 2/2

APPROVED FOR RELEASE: 06/15/2000 CIA-RDP86-00513R001239720006-1"

"APPROVED FOR RELEASE: 06/15/2000 CIA-RDP86-00513R001239720006-1

SUKHOV, S.A.; KADLETS, S.Ya.; PAVLYUK, G.D.

Investigating electrolytic thermocouples. Izm. tekh. 20 no.2:35-37 F '59. (MIRA 12:3)

(Thermocouples--Testing)

APPROVED FOR RELEASE: 06/15/2000 CIA-RDP86-00513R001239720006-1"

"APPROVED FOR RELEASE: 06/15/2000 CIA-RDP86-00513R001239720006-1

PAVLYUK, G. F.

PAVLYUK, G. F. -- "A Psychological Analysis of the Completion of Homework by Students in the Fifth through Seventh Classes (Based on Material from History Lectures)." Alma-Ata State Pedagogical and Teachers' Inst imeni Abay. Chair of Psychology. Alma-Ata, 1956 (Dissertations for the Degree of Candidate in Pedagogical Sciences).

SO: Knizhnaya Letopis', No 9, 1956

APPROVED FOR RELEASE: 06/15/2000 CIA-RDP86-00513R001239720006-1"

"APPROVED FOR RELEASE: 06/15/2000 CIA-RDP86-00513R001239720006-1

APPROVED FOR RELEASE: 06/15/2000 CIA-RDP86-00513R001239720006-1"

"APPROVED FOR RELEASE: 06/15/2000 CIA-RDP86-00513R001239720006-1

[illegible], [illegible].

Asymptotic representation of the solution to the mixed [illegible] for a hyperbolic equation using the method of straight lines. Dop. AN URSR no. 6:726-[illegible] '64. [illegible]RA 17:[illegible]

1. Kiyevskiy [illegible] Gurstvennyy Universitet. Predstavleno akademikom AN [illegible] I.Z.Shtokalo.

APPROVED FOR RELEASE: 06/15/2000 CIA-RDP86-00513R001239720006-1"

"APPROVED FOR RELEASE: 06/15/2000 CIA-RDP86-00513R001239720006-1

PAVLYUK, I.A.

Stability of solutions of systems of second-order linear and non linear differential equations. Dop. AN URSR no.3:315-318 '63. (MIRA 17:10)

1. Kiyevskiy gosudarstvennyy universitet. Pred tavleno akademikom AN UkrSSR I.Z. Shtokalo.

APPROVED FOR RELEASE: 06/15/2000 CIA-RDP86-00513R001239720006-1"

"APPROVED FOR RELEASE: 06/15/2000 CIA-RDP86-00513R001239720006-1

PAVLYUK, I.A.

Limitability of solutions of a linear differential equation of the fourth order of a self-conjugated type. Visnyk Kyiv. un. Ser. astron., mat. ta mekh. no. 1:19-23 '58. (MIRA 14:5)
(Differential equations, Linear)

APPROVED FOR RELEASE: 06/15/2000 CIA-RDP86-00513R001239720006-1"

"APPROVED FOR RELEASE: 06/15/2000 CIA-RDP86-00513R001239720006-1

88865

S/044/60/000/007/019/058
C111/C222

16.3400

AUTHOR: Pavlyuk, I.A.

TITLE: On the boundedness of the solutions of a linear differential equation of fourth order of the selfadjoint type

PERIODICAL: Referativnyy zhurnal. Matematika, no.7, 1960, 94. Abstract no.7608. Visnyk Kyivs's. un-tu, 1958, no.1, Ser. astron., matem. ta mekhan. vyp I, 19-43

TEXT: It is proved that all solutions of the equation

$$(fy'')''+(gy')'+hy = 0, \quad f>0$$

are bounded on $[a,\infty)$ if all solutions of the equation $u''+p(x)u = 0$ are bounded and $\int^{\infty}(|q(x)|+|r(x)|dx<\infty$, where

$$q(x) = \frac{1}{f(x)}, \qquad p(x) = \frac{g(x)}{2f(x)}$$

$$r(x) = \frac{g^2(x)}{4f(x)} + \frac{g''(x)}{2} - h(x).$$

All solutions of the equation of fourth order will be integrable in the

Card 1/2

APPROVED FOR RELEASE: 06/15/2000 CIA-RDP86-00513R001239720006-1"

"APPROVED FOR RELEASE: 06/15/2000 CIA-RDP86-00513R001239720006-1

88865

On the boundedness... S/044/60/000/007/019/058
C111/C222

square on $[a,\infty)$ if all solutions of the equation $u''+p(x)u = 0$ are integrable in the square and $q(x)$, $r(x)$ are bounded.

[Abstracter's note: The above text is a full translation of the original Soviet abstract.]

Card 2/2

APPROVED FOR RELEASE: 06/15/2000 CIA-RDP86-00513R001239720006-1"

"APPROVED FOR RELEASE: 06/15/2000 CIA-RDP86-00513R001239720006-1

S/021/63/000/003/006/022
D405/D301

AUTHOR: Pavlyuk, I. A.

TITLE: On the stability of solutions of systems of second-order differential equations (linear and nonlinear)

PERIODICAL: Akademiya nauk UkrRSR. Dopovidi. no. 3, 1963, 315-318

TEXT: The linear system of differential equations

$$y'' + Q(t)y = P(t)y, \quad t \in [0, \infty) \tag{1}$$

is considered, as well as the nonlinear system

$$y'' + Q(t)y = F(t, y) \tag{2}$$

Here $y(t)$ is an n-dimensional vector, $Q(t)$ is a diagonal matrix,

Card 1/3

APPROVED FOR RELEASE: 06/15/2000 CIA-RDP86-00513R001239720006-1"

"APPROVED FOR RELEASE: 06/15/2000 CIA-RDP86-00513R001239720006-1

P(t) is an arbitrary square matrix of n-th order, and F(t, y) is a vector function. The stability of the trivial solution $y(t) \equiv 0$ of system (1)-(2) is investigated. This system is reduced to an equivalent system of Volterra's integral equations and then the stability of its trivial solution is studied. It is assumed that

$$\int_0^\infty \|V(t)\|^2 \cdot \|P_1(t)\| dt = M_0 < \infty \qquad (11)$$

and that

$$\|V(t)\| < k < \infty \text{ on } [0, \infty) \qquad (13)$$

V(t) is a diagonal matrix in Volterra's integral equation. Theorem 1: If conditions (11) and (13) hold, then the trivial solution $y(t) \equiv 0$ of system (1) is stable. If, in addition, $\|V(t)\| \longrightarrow 0$ for

APPROVED FOR RELEASE: 06/15/2000 CIA-RDP86-00513R001239720006-1"

"APPROVED FOR RELEASE: 06/15/2000 CIA-RDP86-00513R001239720006-1

$t \to \infty$, then the trivial solution is asymptotically stable. A similar stability criterion is derived for the nonlinear system (also in the form of a theorem). These two theorems permit estimating the rate at which the perturbations of the solutions of (1) and (2) tend to the trivial solution.

ASSOCIATION: Kyyivs'kyy derzhavnyy universytet (Kyyiv State University)

PRESENTED: by Academician Y. Z. Shtokalo of the AS UkrRSR

SUBMITTED: April 12, 1962

APPROVED FOR RELEASE: 06/15/2000 CIA-RDP86-00513R001239720006-1"

"APPROVED FOR RELEASE: 06/15/2000 CIA-RDP86-00513R001239720006-1

PAVLYUK, I.A., student V kursa.

A condition of the nonascillation of solutions of a second order linear differential equation. Stud.nauk.pratsi no.16:73-82 '55.
(Differential equations, Linear) (MLRA 10:2)

APPROVED FOR RELEASE: 06/15/2000 CIA-RDP86-00513R001239720006-1"

"APPROVED FOR RELEASE: 06/15/2000 CIA-RDP86-00513R001239720006-1

PAVLYUK, I.A.

Estimating the solutions of one class of nonlinear differential equations of the second order. Dop. AN URSR no.1:5-8 '62. (MIRA 15:2)

1. Kiyevskiy gosudarstvennyy universitet. Predstavleno akademikom AN USSR I.Z.Shtokalo.
(Differential equations)

APPROVED FOR RELEASE: 06/15/2000 CIA-RDP86-00513R001239720006-1"

"APPROVED FOR RELEASE: 06/15/2000 CIA-RDP86-00513R001239720006-1

32416
S/021/62/000/001/[illegible]
D251/D303

16.3400

AUTHOR: Pavlyuk, I.A.

TITLE: On estimating the solutions of one class of non-linear differential equations of the second order

PERIODICAL: Akademiya nauk Ukrayins'koyi RSR. Dopovidi, no. 1, 1962, 5 - 8

TEXT: The author considers the equation

$$y'' + q(t)y = f(t, y, y') \qquad (1)$$

where $q(t) > 0$ has second order derivatives in the interval [illegible] and the function $f(t, y, y')$ is defined and continuous in D, where $D: t \geq 0$; $/y/ < \infty$ $/y'/ < \infty$. It is observed that Eq. (1) is an important equation in the theory of non-linear oscillations. It is supposed that

$$/f(t, y, y')/ \leq p(t)/y/^{\alpha}, \quad \alpha \geq 0, \qquad (2)$$

where $p(t)$ is some positive function on which conditions will be imposed later. To find an estimate of (1) the corresponding inte-

Card 1/5

APPROVED FOR RELEASE: 06/15/2000 CIA-RDP86-00513R001239720006-1"

"APPROVED FOR RELEASE: 06/15/2000 CIA-RDP86-00513R001239720006-1

gral equation is considered, as discussed in the author's earlier article (Ref. 1: DAN URSR, 1323, 1960). By means of this integro-differential equation

$$y(t) = \varphi\,[C_1 \sin\psi + C_2 \cos\psi + \int_0^t K_1(t,\tau)y(\tau)\,d\tau + \int_0^t K_2(t,\tau)f(\tau, y(\tau), y'(\tau))d\tau], \qquad (3)$$

where

$$\varphi = q^{-\frac{1}{2}}(t);\ \psi = \int_0^t q^{\frac{1}{2}}\,dt;\ K_1(t,\tau) = \eta(\tau)K_2(t,\tau);$$

$$K_2(t,\tau) = \varphi(\tau)\sin(\psi(t) - \psi(\tau));$$

$$\eta(t) = \frac{q''}{4q} - \frac{5}{16}\left(\frac{q'}{q}\right)^2,$$

and C_1, C_2 are arbitrary constants, the inequality

$$z(t) \leq C + \int_0^t [k(\tau)z(\tau) + b(\tau)z^{\alpha}(\tau)]d\tau \qquad (4)$$

and Perov's theorem [Abstractor's note: Theorem not stated], the

Card 2/5

APPROVED FOR RELEASE: 06/15/2000 CIA-RDP86-00513R001239720006-1"

"APPROVED FOR RELEASE: 06/15/2000 CIA-RDP86-00513R001239720006-1

following estimates for y(t) are obtained: For $0 \leq \alpha < 1$, $/y(t)/ \leq \varphi(t)R_1(t)$, where

$$R_1(t) = \left\{C^{1-\alpha}\exp[(1-\alpha)\int_0^t k(\tau)d\tau] + (1-\alpha)\int_0^t b(\tau)\exp[(1-\alpha)\int_\tau^t k(x)dx]d\tau\right\}^{\frac{1}{1-\alpha}} \quad (6)$$

For $\alpha > 1$, $/y(t)/ \leq \varphi(t)R_3(t)$ where

$$R_3(t) = C\left\{\exp\left[(1-\alpha)\int_0^t k(\tau)d\tau\right] - C^{\alpha-1}(\alpha-1)\int_0^t b(\tau)\exp \times \right.$$

$$\left. \times \left[(1-\alpha)\int_\tau^t k(x)dx\right]d\tau\right\}^{\frac{1}{1-\alpha}}. \quad (1[illegible])$$

[Abstractor's note: Certain symbols not defined]. Theorem 1: For equation (1) let either a) or b) hold where a) (2) and

$$\int_0^\infty k(t)dt < \infty, \quad \int_0^\infty b(t)dt < \infty \quad (12)$$

hold for $0 \leq \alpha < 1$, b) (2) and (12) hold and $C < R_2(\infty)$ where

APPROVED FOR RELEASE: 06/15/2000 CIA-RDP86-00513R001239720006-1"

"APPROVED FOR RELEASE: 06/15/2000 CIA-RDP86-00513R001239720006-1

$$R_2(h) = \left\{\exp\left[(1-\alpha)\int_0^h k(t)\,dt\right]\right\}^{\frac{1}{\alpha-1}} \cdot \left[(\alpha-1)\int_0^h b(t)\,dt\right]^{\frac{1}{1-\alpha}}, \qquad (8)$$

for $\alpha > 1$. Then in case a) all solutions $y(t)$ of (1) are bounded provided $q^{-1}(t)$ is bounded as $t \to \infty$, or else tend to zero when $q(t) \to \infty$ as $t \to \infty$; In case b) all solutions $y(t)$ of (1), whose initial values $y(0)$ and $y'(0)$ lie in the region $C < R_2(\infty)$ are bounded provided $q^{-1}(t)$ is bounded as $t \to \infty$, or else tend to zero when $q(t) \to \infty$ as $t \to \infty$. It is shown that Theorem 1 may be extended to the system

$$y'' + Q(t)y = F(t, y, y') \qquad (14)$$

where y is an n-dimensional vector, $Q(t)$ is a diagonal n-order matrix which has elements $q_i(t) > 0$, $(i = 1, 2, \ldots, n)$ and second derivatives in $[0, \infty)$. In this case the estimates are

$$\left.\begin{aligned} //y(t)// &\leq //V(t)//\bar{R}_1(t), \\ //y(t)// &\leq //V(t)//\bar{R}_3(t) \end{aligned}\right\} \qquad (15)$$

Card 4/5

APPROVED FOR RELEASE: 06/15/2000 CIA-RDP86-00513R001239720006-1"

"APPROVED FOR RELEASE: 06/15/2000 CIA-RDP86-00513R001239720006-1

32414

On estimating the solutions of one ... S/021/62/000/001/[illegible]
D251/D303

where $\bar{R}_i(t)$ $(i = 1, 2, 3)$ are obtained by substituting $\bar{k}(t)$, $\bar{b}(t)$, for $k(t)$, $b(t)$ in the formulae for R_i $(i = 1, 2, 3)$, where

$$\bar{k}(t) = //V(t)//^2 \cdot //\bar{\eta}(t)//; \quad \bar{b}(t) = p_1(t) //V(t)//^{\alpha+1}$$

and $\bar{}$ is the diagonal n-order matrix, whose elements are given by

$$\eta_i(t) = \frac{q_i''}{4q_i} - \frac{5}{16}\left(\frac{q_i'}{q_i}\right)^2.$$

The method is illustrated by a worked-out example. There are 2 Soviet-bloc references.

ASSOCIATION: Kyyivs'kyy derzhavnyy universytet (State University of Kyyiv)

PRESENTED BY: Y.Z. Shtokalo, Academician AS UkrSSR

SUBMITTED: May 24, 1961

Card 5/5

APPROVED FOR RELEASE: 06/15/2000 CIA-RDP86-00513R001239720006-1"

"APPROVED FOR RELEASE: 06/15/2000 CIA-RDP86-00513R001239720006-1

GUDIMENKO, Fedor Isidorovich[Hudymenko, F.S.], dots.; PAVLYUK, Ivan Adamovich; VOLKOVA, Valentina Aleksandrovna; BALYASNA, O.Ye., red.; KHOKHANOVSKAYA, T.I.[Khokhanovs'ka, T.I.], tekhn. red.

[Collection of problems on differential equations]Zbirnyk zadach z dyferentsial'nykh rivnian'. Za red. F.S.Hudymenka. Kyiv, Vyd-vo Kyivs'koho univ., 1962. 166 p. (MIRA 15:9)
(Differential equations—Problems, exercises, etc.)

APPROVED FOR RELEASE: 06/15/2000 CIA-RDP86-00513R001239720006-1"