"APPROVED FOR RELEASE: 06/15/2000 CIA-RDP86-00513R001239810011-5

BUZANOV, Aleksey Alekseyevich; PECHATIN, Aleksandr Aleksandrovich; PALEYEV, N.M., red.; GRIGOR'YEVA, A.I., red.; KOROLEV, A.V., tekhn. red.

[Engine operator's textbook]Uchebnoe posobie motorista. Moskva, Izd-vo DOSAAF, 1962. 291 p. (MIRA 16:2)
(Marine engines)

APPROVED FOR RELEASE: 06/15/2000 CIA-RDP86-00513R001239810011-5"

"APPROVED FOR RELEASE: 06/15/2000 CIA-RDP86-00513R001239810011-5

PECHATIN, A., kapitan 1 ranga

Underwater saboteurs. Voen. znan. 39 no.11:36-37 N '63.
(MIRA 17:2)

APPROVED FOR RELEASE: 06/15/2000 CIA-RDP86-00513R001239810011-5"

"APPROVED FOR RELEASE: 06/15/2000 CIA-RDP86-00513R001239810011-5

PECHATIN, A.

Not guests, but hosts. Voen. znan. 41 no.3:43 Mr '65. (MIRA 18:5)

1. Nachal'nik otdela upravleniya morskoy podgotovki Tsentral'nogo komiteta Vsesoyuznogo dobrovol'nogo obshchestva sodeystviya armii, aviatsii i flotu SSSR.

APPROVED FOR RELEASE: 06/15/2000 CIA-RDP86-00513R001239810011-5"

"APPROVED FOR RELEASE: 06/15/2000 CIA-RDP86-00513R001239810011-5

PECHATINA, V.I.; LEONOVA, A.P.

Production of new types of canned herring. Trudy BaltNIRO no.7: 193-194 '61. (MIRA 15:2)

(Herring, Canned)

APPROVED FOR RELEASE: 06/15/2000 CIA-RDP86-00513R001239810011-5"

"APPROVED FOR RELEASE: 06/15/2000 CIA-RDP86-00513R001239810011-5

NIKANDROV, B.; VOLGIN, V.; KUZNETSOV, N.; RYABTSEVA, A.; VORONIN, A.; SERGEYEV, Ye.; PECHATKIN, I.

Labor campaign in honor of the congress. Prom.koop. 12 no.12:4 D '58. (MIRA 12:2)

1. Predsedatel' pravleniya moskovskoy arteli "Tol'prom" (for Nikandrov). 2. Sekretar' partorganizatsii moskovskoy arteli "Tol'prom" (for Volgin). 3. Predsedatel' pravleniya arteli "Rembytshvey" (for Kuznetsov). 4. Sekretar' partoorganizatsii arteli "Rembytshvey" (for Ryabtseva). 5. Predsedatel' pravleniya oblpromsoveta Tul'skoy oblasti (for Voronin). 6. Zamestitel' predsedatelya pravleniya oblpromsoveta Alma-Atinskoy oblasti (for Sergeyev). 7. Sekretar' partorganizatsii krasnoslobodskoy arteli im. Kuybysheva Mordovskoy ASSR (for Pechatkin).
(Cooperative societies)

APPROVED FOR RELEASE: 06/15/2000 CIA-RDP86-00513R001239810011-5"

"APPROVED FOR RELEASE: 06/15/2000 CIA-RDP86-00513R001239810011-5

PECHATNIKOV, Boris Mikhaylovich; GOSSEN, Ervin Frantsevich;
KARPOVA, Ye.S., red.

[New agricultural machinery for erosion control and its adjustment] Protivoeroziinaia tekhnika i ee regulirovka. TSelinograd, Red.izd-va "Kolos" po tselinnym raionam, 1964. 22 p.
(MIRA 18:4)

APPROVED FOR RELEASE: 06/15/2000 CIA-RDP86-00513R001239810011-5"

"APPROVED FOR RELEASE: 06/15/2000 CIA-RDP86-00513R001239810011-5

PECHATNIKOV, M.I.

Translation from: Referativnyy Zhurnal, Mashinostroyeniye, 1957, Nr 1, p. 66 (USSR) 123 - 1 - 379

AUTHOR: Pechatnikov, M.I.

TITLE: Bushings from Compressed Wood (Proizvodstvo pressovannykh vkladyshey iz drevesnoy kroski)

PERIODICAL: Derevoobrabat. prom-st', 1956, Nr 5, pp. 25-26

ABSTRACT: The technique of preparing wood chips from which various bushings are manufactured at the Leningrad Veneer plant, is described. Dry birch waste is used in this production. Wood chips 6-8 x 0.3 mm in size and containing a maximum of 10% moisture are saturated with 080 formaldehyde resin, then dried to a 2.8% moisture and 18-30% resin content. The bushings are pressed in press-forms pre-heated to 150-158° in 200-ton hydraulic presses. The specific pressure in this compression is 450 - 500 kg/cm^2. The permissible load for these bushings of wood chips is 20 kg/cm2 at 1.8 - 2 m/sec peripherial speed of the journal.

Card 1/2

APPROVED FOR RELEASE: 06/15/2000 CIA-RDP86-00513R001239810011-5"

"APPROVED FOR RELEASE: 06/15/2000 CIA-RDP86-00513R001239810011-5

PECHATNIKOV, M.I., inzhener.

The production of bushings from compressed wood waste. Der.prom. 5 no.5:25-26 My '56. (MLRA 9:8)

1. Leningradskiy fanernyy zavod.
(Wood waste) (Wood, Compressed)

APPROVED FOR RELEASE: 06/15/2000 CIA-RDP86-00513R001239810011-5"

"APPROVED FOR RELEASE: 06/15/2000 CIA-RDP86-00513R001239810011-5

PECHATNIKOV, M.I., inzhener.

Improving methods of establishing work norms. Der.prom. 5 no.1: 25-26 Ja '56. (MLRA 9:5)

1. Leningradskiy promyshlenno-eksperimental'nyy fanernyy zavod. (Labor productivity) (Woodworking industries)

APPROVED FOR RELEASE: 06/15/2000 CIA-RDP86-00513R001239810011-5"

"APPROVED FOR RELEASE: 06/15/2000 CIA-RDP86-00513R001239810011-5

PECHATNIKOV, M.I., inzhener.

The production of bushings from compressed wood waste. Der.prom. 5 no.5:25-26 My '56. (MLRA 9:8)

1. Leningradskiy fanernyy zavod.
(Wood waste) (Wood, Compressed)

APPROVED FOR RELEASE: 06/15/2000 CIA-RDP86-00513R001239810011-5"

"APPROVED FOR RELEASE: 06/15/2000 CIA-RDP86-00513R001239810011-5

PECHATNIKOV, M.I.

Use of hulling wastes as a material for turned wood products. Der. prom. 4 no.2:28 F '55. (MIRA 8:4)

1. Leningradskiy fanernyy zavod.
(Turning) (Woodworking machinery)

APPROVED FOR RELEASE: 06/15/2000 CIA-RDP86-00513R001239810011-5"

"APPROVED FOR RELEASE: 06/15/2000 CIA-RDP86-00513R001239810011-5

PECHATNIKOV, Mikhail Izrailevich, inzh.; TKACHENKO, A.A., red.; LEBEDEVA, I.D., red. izd-va; GRECHISHCHEVA, V.I., tekhn. red.

[Handbook for machine operators in the furniture industry] Posobie dlia rabochikh-stanochnikov mebel'nogo proizvodstva. Moskva, Goslesbumizdat, 1962. 92 p. (MIRA 16:3)
(Woodworking machinery)

APPROVED FOR RELEASE: 06/15/2000 CIA-RDP86-00513R001239810011-5"

"APPROVED FOR RELEASE: 06/15/2000 CIA-RDP86-00513R001239810011-5

L 9488-66 ETC(m) WW

ACC NR: AT5028812 SOURCE CODE: UR/2563/65/000/250/0029/0033

31

B+1

AUTHOR: Gnuchev, M.V.; Rozanov, L.N.; Pechatnikov, M.S.

ORG: Leningrad Polytechnic Institute (Leningradskiy politekhnicheskiy institut)

TITLE: A bellows-volumetric manometer for pressure measurements in logarithmic units

SOURCE: Leningrad. Politekhnicheskiy institut. Trudy, no. 250, 1965. Avtomatizatsiya i tekhnologiya mashinostroyeniya (Automation and technology of machinery manufacture), 29-33

TOPIC TAGS: manometer, pressure gage, pressure measuring instrument

ABSTRACT: There are still no simple, universal designs of mechanical manometers fit for industrial production. Usually the designs incorporate metal or metallized membranes as the pressure sensors in these devices, and bellows are rarely used because of the frequent appearance of residual deformations due to a low elastic limit. The present authors note that bellows should not be disregarded; bellows have a higher sensitivity and make it possible to considerably reduce the size of manometers without sacrificing operating parameters. This paper attempts to investigate the possibilities of bellows manometers for measuring pressures in a broad range (three and more orders of magnitude). A description is given of the design of a manometer for pressures of $10^5 - 10^1$ n/m^2 (760-1 mm Hg). Fig. 1 shows an equivalent diagram of a manometer with three bellows represented in the figure as springs. The relationship of the area of the bellows f_i to rigidity g_i (where i is the number of the bellows,

Card 1/3

APPROVED FOR RELEASE: 06/15/2000 CIA-RDP86-00513R001239810011-5"

"APPROVED FOR RELEASE: 06/15/2000 CIA-RDP86-00513R001239810011-5

L 9488-66

ACC NR: AT5028812

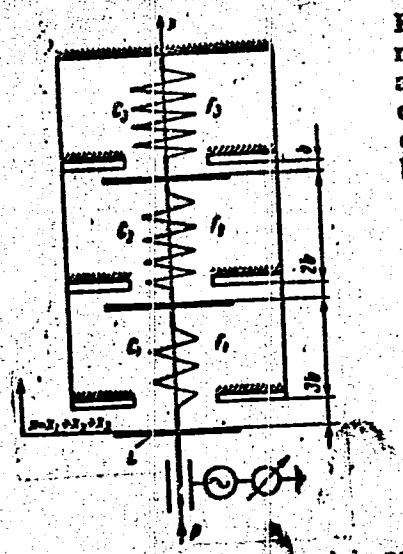

Fig. 1. Equivalent diagram of a bellows manometer: C and f are the rigidity and area of the bellows; L is the manometer carriage, connected to the inner casing of the cylindrical condenser; b is the gap between the rigid annulus and the support in the manometer housing; P is pressure

starting from the lowest one) is selected in such a way as to obtain appreciable deformation in various ranges of pressure. Every bellows has a deformation limiter. The design described applies in all cases requiring measurements of large pressure ranges in low and medium vacuum. The high value of the overall

Card 2/3

APPROVED FOR RELEASE: 06/15/2000 CIA-RDP86-00513R001239810011-5"

"APPROVED FOR RELEASE: 06/15/2000 CIA-RDP86-00513R001239810011-5

L 9488-66

ACC NR: AT5028812

variation in the capacity simplifies the electrical circuit of the device which, together with the linearity of the characteristic, makes it applicable for industrial uses. Orig. art. has: 4 figures, 9 formulas, and 1 table.

SUB CODE: 13, 14 / SUBM DATE: none / OTH REF: 003

Card 3/3

APPROVED FOR RELEASE: 06/15/2000 CIA-RDP86-00513R001239810011-5"

"APPROVED FOR RELEASE: 06/15/2000 CIA-RDP86-00513R001239810011-5

SOV/112-57-9-18896

Translation from: Referativnyy zhurnal, Elektrotekhnika, 1957, Nr 9, pp 127-128 (USSR)

AUTHOR: Pechatnikov, Ye.

TITLE: Electrification of Orel Oblast Kolkhozes (Elektrifikatsiya kolkhozov Orlovskoy oblasti)

PERIODICAL: Sel'skiy stroitel', 1956, Nr 7, pp 12-13

ABSTRACT: The Orel Construction and Erection Office has built the 500-kw Sergeyevskaya Hydroelectric Station in Orel Oblast , with a dam 72 m long; the same organization has also built 155 km of 10-kv lines, 220 km of low-voltage lines, and 65 step-down substations for electrification of kolkhozes lying about the Krasnenskaya Hydroelectric Station built earlier. Now, the Lykovo Hydroelectric Station is being built from prefabricated reinforced concrete and hollow blocks, with a dam 70 m long. A further increase in electric supply for the agricultural economy of Orel Oblast in the Sixth Five-Year Plan is planned largely by means of connecting rural networks to

Card 1/2

APPROVED FOR RELEASE: 06/15/2000 CIA-RDP86-00513R001239810011-5"

"APPROVED FOR RELEASE: 06/15/2000 CIA-RDP86-00513R001239810011-5

SOV/112-57-9-18896

Electrification of Orel Oblast' Kolkhozes

substations and large generating stations of the Ministry of Electric Stations and other organizations. During the Sixth Five-Year Plan period, the capital investment in rural electrification is expected to rise to 90 million rubles; electrification of 320 agricultural artels is planned, which will bring the total level of electrification of kolkhozes of the oblast to 65%. Among construction mechanization measures adopted in 1955, Orel Oblast has put into production reinforced concrete stubs for poles of 10-kv lines. Now, the office is preparing for the manufacture of reinforced concrete poles. A light DT-54 or SKhTZ-NATI tractor will be combined with an electric station, which, it is planned now, will supply power to a pole-hole drill, a crane winch, and other electric implements.

I.V.I.

Card 2/2

APPROVED FOR RELEASE: 06/15/2000 CIA-RDP86-00513R001239810011-5"

"APPROVED FOR RELEASE: 06/15/2000 CIA-RDP86-00513R001239810011-5

PECHATNIKOV, Ye.

Electrification of Orel Province collective farms. Sel'.strei. 11 no.7:12-13 Jl '56. (MIRA 9:9)

1.Upravlyayushchiy oblastnoy stroitel'no-montazhnoy konterey "Sel'elektrostroy".
(Orel Province)

APPROVED FOR RELEASE: 06/15/2000 CIA-RDP86-00513R001239810011-5"

"APPROVED FOR RELEASE: 06/15/2000 CIA-RDP86-00513R001239810011-5

USSR/General Problems of Pathology - Tumors. Comparative Oncology. Tumors of Man U

Abs Jour : Ref Zhur Biol., No 6, 1959, 27553

Author : Yegorova, Ye.K., Pechatnikova, Ye. A., Pyltsov, I.M.
Inst : -
Title : The State of the Motor-Evacuatory Function of the Small Intestine After Trans-Pleural Surgeries Due to Carcinoma of Cardia.

Orig Pub : Eksperim. khirurgiya, 1958, No 2, 23-26

Abstract : No abstract.

Card 1/1

APPROVED FOR RELEASE: 06/15/2000 CIA-RDP86-00513R001239810011-5"

"APPROVED FOR RELEASE: 06/15/2000 CIA-RDP86-00513R001239810011-5

LEKHTMAN, Ya.B.; PECHATNIKOV, Yu.S.

Interaction of the signal systems during simultaneous muscular and mental work. Vop.psikhol. 2 no.2:51-63 Mr-Ap '56. (MLRA 9:8)

1. Kafedra fiziologii Krasnoznamennogo Voyennogo instituta fizicheskoy kul'tury i sporta imeni V.I. Lenina, Leningrad.
(Nervous system)
(Movement, Psychology of)
(Conditioned response)

APPROVED FOR RELEASE: 06/15/2000 CIA-RDP86-00513R001239810011-5"

"APPROVED FOR RELEASE: 06/15/2000 CIA-RDP86-00513R001239810011-5

PECHATNIKOVA, L.I.

Greater use of paper patterns. Leg.prom.17 no.3:53-54 Mr '57.
(MLRA 10:4)

1. Glavnyy inzhener Kazanskoy fabriki no.4.
(Dressmaking--Patern design)

APPROVED FOR RELEASE: 06/15/2000 CIA-RDP86-00513R001239810011-5"

"APPROVED FOR RELEASE: 06/15/2000 CIA-RDP86-00513R001239810011-5

PECHATNIKOVA, Sh. Ya.

VOLOSOV, D.S.; PECHATNIKOVA, Sh.Ya.

"Bifokator" for wide-angle anamorphite optical systems for wide-screen cinematography. Zhur.nauch.i prikl.fot.i kin. 2 no.2:116-129 Mr-Ap '57. (MLRA 10:5)

1.Gosudarstvennyy opticheskiy institut im. S.I. Vavilova.
(Motion-picture cameras)

APPROVED FOR RELEASE: 06/15/2000 CIA-RDP86-00513R001239810011-5"

"APPROVED FOR RELEASE: 06/15/2000 CIA-RDP86-00513R001239810011-5

PECHATNIKOVA, Ye.A.

A case of benign escphageal tumor complicated by diverticulum.
Khirurgiia, Moskva No.5:61-63 May 50. (CIML 19:4)

1. Of the Institute of Surgery imeni A.V.Vishnevskiy (Acting Director - Prof. A.A.Vishnevskiy), Academy of Medical Sciences USSR.

APPROVED FOR RELEASE: 06/15/2000 CIA-RDP86-00513R001239810011-5"

"APPROVED FOR RELEASE: 06/15/2000 CIA-RDP86-00513R001239810011-5

PECHATNIKOVA, E.A.

PETROV, B.A., professor, predsedatel'; DOROFEEV, V.I., sekretar'; MLYNCHIK, V.E.; KAZANSKIY, V.I., professor; BANDILEV, A.N., professor; LEVIT, V.S., professor; PETROVSKIY, B.V., professor; PECHATNIKOVA, E.A.; SOLOV'YEV, A.Ye., professor; MAKHOV, N.I., dotsent; YELANSKIY, N.N. professor; PLOTKIN, F.M., professor; VISHNEVSKIY, A.A., professor; VETCHINKIN, Yu.M.; GUREVICH, N.I., professor; OSIPOV, B.K., professor; TIKHONOVA, N.A.; RYZHIKH, A.N., professor; HUDYAVSKIY, B.A.; TERNOVSKIY, S.D., professor.

Minutes of the session of the Surgical Society of Moscow and Moscow Province of October 10, 1952. Khirurgiia no.4:92-95 Ap '53. (MLRA 6:6)

1. Khirurgicheskoye obshchestvo Moskvy i Moskovskoy Oblasti.
(Esophagus--Surgery) (Esophagus--Cancer) (Rectum--Diseases)

APPROVED FOR RELEASE: 06/15/2000 CIA-RDP86-00513R001239810011-5"

"APPROVED FOR RELEASE: 06/15/2000 CIA-RDP86-00513R001239810011-5

PECHATNIKOVA, Ye. A.

"Paths of the Lymphogenic Spreading of Metastases of Cancer of the Cardia." Dr Med Sci, Acad Med Sci USSR, Moscow, 1955. (KL, No 10, Mar 55)

SO: Sum. No. 670, 29 Sep 55--Survey of Scientific and Technical Dissertations Defended at USSR Higher Educational Institutions (15)

APPROVED FOR RELEASE: 06/15/2000 CIA-RDP86-00513R001239810011-5"

"APPROVED FOR RELEASE: 06/15/2000 CIA-RDP86-00513R001239810011-5

PECHATNIKOVA, YE. A.

ZOLOTAREVSKIY, V.Ye.; PECHATNIKOVA, Ye.A.

Motor and secretory function of the gastric stump after resection of proximal portion of the stomach [with summary in English]. Khirurgiia 33 no.6:24-28 Je '57. (MIRA 10:12)

1. Iz Instituta khirurgii AMN SSSR imeni A.V.Vishnevskogo (dir. - deystvitel'nyy chlen AMN SSSR prof. A.A.Vishnevskiy)
(GASTRECTOMY
motor & secretory funct. of stump after resection of proximal portion)

APPROVED FOR RELEASE: 06/15/2000 CIA-RDP86-00513R001239810011-5"

"APPROVED FOR RELEASE: 06/15/2000 CIA-RDP86-00513R001239810011-5

PECHATNIKOVA, Ye.A.

YEGOROVA, Ye.K.; PECHATNIKOVA, Ye.A.; PYL'TSOV, I.M.

Motor and evacuatory functions of the small intestine following transpleural surgery for cardial cancer [with summary in English] Eksper.khir. 3 no.2:23-26 Mr-Ap '58. (MIRA 11:4)

1. Iz Instituta khirurgii imeni A.V.Vishnevskogo (dir.-deystvitel'nyy chlen AMN SSSR prof. A.A.Vishnevskiy) AMN SSSR.

(INTESTINE, SMALL, physiol.
motor & evacuant funct. eff. of gastrectomy for cardial cancer (Rus)
(STOMACH NEOPLASMS, surg.
eff. of surg. for cardial cancer on small intestinal motor & evacuant funct. (Rus)
(GASTRECTOMY, in var. dis.
cardial cancer, eff. on small intestinal motor & evacuant funct. (Rus)

APPROVED FOR RELEASE: 06/15/2000 CIA-RDP86-00513R001239810011-5"

"APPROVED FOR RELEASE: 06/15/2000 CIA-RDP86-00513R001239810011-5

PEGHATNIKOVA, Ye. A., doktor med. nauk (Moskva, 4-ya Sokol'nicheskaya, d.11, kv.64)

Lymphogenic metastasis of cardial cancer [with summary in English] Vest.khir. 80 no.4:14-21 Ap'58 (MIRA 11:5)

1. Iz Instituta khirurgii im. A.V. Vishnevskogo AMN SSSR (dir.-prof. A.A. Vishnevskiy.

(STOMACH NEOPLASMS, pathol.
lymphatic spread of cardial metastasis (Rus))
(LYMPHATIC SYSTEM, physiol.
lymphatic spread of canc metastasis of cardial cancer (Rus))

APPROVED FOR RELEASE: 06/15/2000 CIA-RDP86-00513R001239810011-5"

"APPROVED FOR RELEASE: 06/15/2000 CIA-RDP86-00513R001239810011-5

PECHATNIKOVA, Ye.A., doktor med.nauk; ZOLOTAREVSKIY, V.Ya., kand.med.nauk

Therapeutic importance of A.V.Vishnevskii's novocaine block in some forms of surgical pathology of the esophagus and stomach. Kaz.med.shur. 40 no.1:41-44 Ja-F '59. (MIRA 12:10)

1. Iz instituta khirurgii im. A.V.Vishnevskogo AMN SSSR (direktor - deystvitel'nyy chlen AMN SSSR, prof.A.A.Vishnevskiy).
(ALIMENTARY CANAL--DISEASES) (LOCAL ANESTHESIA)

APPROVED FOR RELEASE: 06/15/2000 CIA-RDP86-00513R001239810011-5"

"APPROVED FOR RELEASE: 06/15/2000 CIA-RDP86-00513R001239810011-5

PECHATNIKOVA, Yelizaveta Aleksandrovna; DUKHTYAR', Ye.G., red.

[Current problems of the surgical treatment of cancer of the cardial region of the stomach] Aktual'nye voprosy khirurgicheskogo lecheniia raka kardinal'nogo otdela zheludka. Moskva, Meditsina, 1965. 182 p. (MIRA 18:10)

APPROVED FOR RELEASE: 06/15/2000 CIA-RDP86-00513R001239810011-5"

"APPROVED FOR RELEASE: 06/15/2000 CIA-RDP86-00513R001239810011-5

PECHATNIKOVA, Ye.A. (Moskva, Sadovo-Spasskaya ul., d.21, kv.178); IEPAYEV, M. (Moskva).

Sinistral pleuritis as a symptom of cancer of the cardia. Grud. khir. 6 no.2:101-102 Mr-Ap '64. (MIRA 18:4)

APPROVED FOR RELEASE: 06/15/2000 CIA-RDP86-00513R001239810011-5"

"APPROVED FOR RELEASE: 06/15/2000 CIA-RDP86-00513R001239810011-5

NAGIB, A.; PECHATNIKOVA, Ye.A.

Separate bronchospirometry in surgery on the esophagus. Khirurgiia 39 no.12:66-71 D '63 (MIRA 18:1)

1. Iz Instituta khirurgii imeni A.V. Vishnevskogo (direktor deystvitel'nyy chlen AMN SSSR prof. A.A. Vishnevskiy) AMN SSSR.

APPROVED FOR RELEASE: 06/15/2000 CIA-RDP86-00513R001239810011-5"

"APPROVED FOR RELEASE: 06/15/2000 CIA-RDP86-00513R001239810011-5

YEGOROVA, Ye.K.; PECHATNIKOVA, Ye.A.

On intestinal function following cardiectomy and gastrectomy in cancer. Vest.khir. no.1:14-19'63. (MIRA 16:7)

1. Iz Instituta khirurgii imeni A.V.Vishnevskogo (dir.-prof. A.A.Vishnevskiy) AMN SSSR.
(STOMACH—CANCER) (STOMACH—SURGERY) (INTESTINES)

APPROVED FOR RELEASE: 06/15/2000 CIA-RDP86-00513R001239810011-5"

"APPROVED FOR RELEASE: 06/15/2000 CIA-RDP86-00513R001239810011-5

PSCHENICHNIKOV, I.V.; PECHATNIKOVA, Ye.A.

Preoperative determination of the length of the mobilized intestine necessary for the creation of a transpleural artificial esophagus. Eksper. khir. i anest. no.1:36-39'63. (MIRA 16:10)

1. Iz Instituta khirurgii imeni A.V.Vishnevskogo (dir. deystvitel'nyy chlen AMN SSSR prof. A.A.Vishnevskiy) AMN SSSR.
(ESOPHAGUS—SURGERY) (INTESTINE)
(SURGERY, PLASTIC)

APPROVED FOR RELEASE: 06/15/2000 CIA-RDP86-00513R001239810011-5"

"APPROVED FOR RELEASE: 06/15/2000 CIA-RDP86-00513R001239810011-5

FIRSOVA, P.P.; PECHATNIKOVA, Ye.A.; AKHMET-NAGIB

Physiological basis of surgical approaches to the esophagus. Vest.khir. no.3:9-14 '62. (MIRA 15:3)

1. Iz Instituta khirurgii im. A.V. Vishnevskogo (dir. - prof. A.A. Vishnevskiy) AMN SSSR. Adres avtorov: Moskva, B. Serpukhovskaya ul., d.27, Institut khirurgii im. A.V. Vishnevskogo.
(ESOPHAGUS—SURGERY) (SPIROSCOPE AND SPIROSCOPY)

APPROVED FOR RELEASE: 06/15/2000 CIA-RDP86-00513R001239810011-5"

"APPROVED FOR RELEASE: 06/15/2000 CIA-RDP86-00513R001239810011-5

KUZNETSOV, N.N., doktor med.nauk; PECHATNIKOVA, Ye.A.

Study of the functional state of the liver following resection of various segments of the stomach and gastrectomy for cancer. Khirurgiia no.8:96-101 Ag '62. (MIRA 15:8)

1. Iz Instituta khirurgii imeni A.V. Vishnevskogo (dir. - deystvitel'nyy chlen AMN SSSR prof. A.A. Vishnevskiy) AMN SSSR.
(STOMACH--CANCER) (STOMACH--SURGERY) (LIVER)

APPROVED FOR RELEASE: 06/15/2000 CIA-RDP86-00513R001239810011-5"

"APPROVED FOR RELEASE: 06/15/2000 CIA-RDP86-00513R001239810011-5

KUZNETSOV, N.N.; PECHATNIKOVA, Ye.A., doktor med. nauk (Moskva, B-78, Sadovo-Spasskaya, d.21, kv. 178)

Functional state of the liver patients following radical surgery on the stomach. Vest. Khir. 91 no.10:105-107 O '63. (MIRA 17:7)

1. Iz Instituta khirurgii imeni A.V. Vishnevskogo (dir. - prof. A.A. Vishnevskiy) i Nagatinskoy lineynoy bol'nitsy Moskovsko-Oksko-Volzhskogo vodzdravotdela (glavnyy vrach - N.N. Kuznetsov).

APPROVED FOR RELEASE: 06/15/2000 CIA-RDP86-00513R001239810011-5"

"APPROVED FOR RELEASE: 06/15/2000 CIA-RDP86-00513R001239810011-5

PECHATNOV, A.V., inzh.

State standard No. 2523-51 should be revised. Svar. proizv. no.10: 43-44 O '58. (MIRA 11:10)

1. Losinoostrovskiy elektrodnyy zavod.
(Electrodes--Standards)

APPROVED FOR RELEASE: 06/15/2000 CIA-RDP86-00513R001239810011-5"

"APPROVED FOR RELEASE: 06/15/2000 CIA-RDP86-00513R001239810011-5

GORPENYUK, N.A., kand.tekhn.nauk, dots.; PECHATNOV, A.V., inzh.

Using aqueous solutions of potassium chromate for electrode coating. Svar. proizv. no.1:32 Ja '58. (MIRA 11:1)

1.Kiyevskiy politekhnicheskiy institut (for Gorpenyuk).
2.Elektrodnyy zavod Rel'so-svarochnogo tresta Ministerstva putey soobshcheniya (for Pechatnov).
(Electrodes) (Potassium chromate)

APPROVED FOR RELEASE: 06/15/2000 CIA-RDP86-00513R001239810011-5"

"APPROVED FOR RELEASE: 06/15/2000 CIA-RDP86-00513R001239810011-5

AUTHOR: Pechatnov, A. V., Engineer 135-58-8-11/20

TITLE: A Drying and Calcinating Furnace for Electrodes (Sushil'-no - prokalochnaya pech' dlya elektrodov)

PERIODICAL: Svarochnoye proizvodstvo, 1958, Nr 8, pp 35 - 37 (USSR)

ABSTRACT: The article contains a detailed description of an electric furnace which dries and calcinates electrodes without pre-drying in the open air. It was built at the Losinoostrovskiy Electrode Plant MPS. The furnace is of a simple design and can be built at any electrode plant. Electrodes are dried in 150 and 250 kg containers by intensive transverse air circulation. Separate description of the containers and the air circulation systems, heat recuperation and temperature control are given. The complete mechanization of the entire electrode production process is planned.

Card 1/2

APPROVED FOR RELEASE: 06/15/2000 CIA-RDP86-00513R001239810011-5"

"APPROVED FOR RELEASE: 06/15/2000 CIA-RDP86-00513R001239810011-5

A Drying and Calcinating Furnace for Electrodes 135-58-8-11/20

There are 2 diagrams, 1 drawing and 1 graph.

ASSOCIATION: Losinoostrovskiy elektrodnyy zavod MPS (Losinoostrovskiy Electrode Plant MPS, the town of Babushkin, Moscow oblast)

1. Furnaces--Characteristics 2. Electrodes--Drying

Card 2/2

APPROVED FOR RELEASE: 06/15/2000 CIA-RDP86-00513R001239810011-5"

"APPROVED FOR RELEASE: 06/15/2000 CIA-RDP86-00513R001239810011-5

DIMOV, L.D.; PECHATNOV, A.V.; VAYNSHTEIN, Sh.I.; POGORELKO, M.P.

Drying and calcinating furnace for electrodes. Prom.energ. 15 no.5:19-21 My '60. (MIRA 13:7)
(Electric furnaces) (Electrodes)

APPROVED FOR RELEASE: 06/15/2000 CIA-RDP86-00513R001239810011-5"

"APPROVED FOR RELEASE: 06/15/2000 CIA-RDP86-00513R001239810011-5

PECHATNOV, A.V., inzh.

Electrode drying and hardening furnace. Svar. proizv. no. 8:35-37 Ag '58. (MIRA 11:8)

1. Losinoostrovskiy elektrodnyy zavod Ministerstva putey soobshcheniya.
(Electric furnaces)
(Electrodes)

APPROVED FOR RELEASE: 06/15/2000 CIA-RDP86-00513R001239810011-5"

"APPROVED FOR RELEASE: 06/15/2000 CIA-RDP86-00513R001239810011-5

AUTHOR: Pechatnov, A.V., Engineer SOV-135-58-10-17/19

TITLE: Revision of GOST Standard 2523-51 (Peresmotret GOST 2523-51)

PERIODICAL: Svarochnoye proizvodstvo, 1958, Nr 10, pp 43-44 (USSR)

ABSTRACT: With reference to an article entitled "Principal Problems of Standardization For Arc-Welding Electrodes", by A.A. Yerokhin and published in a previous copy of this periodical, the author discusses some problems relating to the reorganization of the existing GOST Standard 2523-51 and submits suggestions dealing with the classification, denomination and testing of electrodes.

ASSOCIATION: Losinoostrovskiy elektrodnyy zavod (The Losinoostrovskiy Electrode Plant)

1. Arc welding--Electrodes 2. Electrodes--Standardization

Card 1/1

APPROVED FOR RELEASE: 06/15/2000 CIA-RDP86-00513R001239810011-5"

"APPROVED FOR RELEASE: 06/15/2000 CIA-RDP86-00513R001239810011-5

PECHATNOV A.V.

139-58-1-13/23

AUTHORS: Gorpenyuk, N.A., Candidate of Technical Sciences, Dotsent, and Pechatnov, A.V., Engineer

TITLE: The Introduction of Aqueous Solutions of Chromate Potassium into Electrode Coatings (Vvedeniye v elektrodnyye pokrytiya vodnykh rastvorov khromovokislykh soley kaliya)

PERIODICAL: Svarochnoye proizvodstvo, 1958, Nr 1, p 32 (USSR)

ABSTRACT: The Kiyevskiy politekhnicheskiy institut (Kiyev Polytechnical Institute) in 1949 devised electrodes of K-2 type for the welding of railway ends and cross pieces. In 1955, these electrodes were improved and re-named K-2-55 type. Chromate potassium was added to their coatings to stabilize the welding arc. Tests have shown that the addition of bichromate potassium to the coatings (0.05% in the form of an aqueous solution) does not deteriorate the stability of the welding arc, nor influence the sticking properties of liquid glass or the mechanical strength of electrode coatings. Therefore, 1 % of chromate potassium added in dry form, can be replaced by aqueous solutions of chromate and bichromate potassium which can be added (0.05 %). The K-2-55

Card 1/2

APPROVED FOR RELEASE: 06/15/2000 CIA-RDP86-00513R001239810011-5"

"APPROVED FOR RELEASE: 06/15/2000 CIA-RDP86-00513R001239810011-5

The Introduction of Aqueous Solutions of Chromate Potassium into Electrode Coatings 135-58-1-12/23

electrodes were used for two years. The coating strength and the stabilizing properties of the welding arc were satisfactory. There are 5 Soviet references.

ASSOCIATIONS: Kiyevskiy politekhnicheskiy institut (Kiyev Polytechnical Institute). Elektrodnyy zavod Rel'so-svarochnogo tresta MPS (Electrode Plant of the Rail Welding Trust MPS)

AVAILABLE: Library of Congress

Card 2/2 1. Electrodes 2. Chromatic potassium-Applications

APPROVED FOR RELEASE: 06/15/2000 CIA-RDP86-00513R001239810011-5"

"APPROVED FOR RELEASE: 06/15/2000 CIA-RDP86-00513R001239810011-5

89744

1.1110 2908

Z/032/61/011/001/005/008
E073/E335

AUTHOR: Pechatý, K., Engineer

TITLE: Cutting Forces Acting in the Case of Milling with Carbide-tipped Tools

PERIODICAL: Strojírenství, 1961, Vol. 11, No. 1, pp. 49 - 55

TEXT: A new method of manufacture of milling cutters by direct pressing from sintered carbide was developed and therefore increased attention has to be paid to the problem of rigidity and power in the design of milling machines. The rigidity of the tools depends primarily on the magnitude and direction of the resultant maximum forces. Knowledge of the magnitude and direction of the resultant cutting force is important from the point of view of producing better designs of machine tools. In order to determine the magnitude and direction of the resultant cutting force this force has to be sub-divided for the individual cutters and for each cutter has to be sub-divided again into three mutually perpendicular forces. In view

Card 1/11

APPROVED FOR RELEASE: 06/15/2000 CIA-RDP86-00513R001239810011-5"

"APPROVED FOR RELEASE: 06/15/2000 CIA-RDP86-00513R001239810011-5

89744

Z/032/61/011/001/005/008
E073/E335

Cutting Forces ... .

of the fact that milling is a discontinuous cutting process with a variable chip thickness, the dynamometer must allow recording the progress of these values during an entire revolution. This can be achieved only in the case of a small inertia mass of the mechanical part of the dynamometer. For measuring the cutting-force components a dynamometer was proposed, a sketch of which is shown in Fig. 1. It consists of the measuring part ("měřicí část" in figure caption) mounted in the milling head and consisting of a frame and a tool-holder milled from a single piece and held together by means of two arms (Fig. 2). The electrical part of the dynamometer operates on the strain-gauge principle. Since the desired sensitivity could not be achieved by simply glueing on the strain gauges to the most stressed parts, the sensitivity was increased by applying spring-steel bracing strips (Czech patent 84 623). Arrangement of the bracing strips and formation of measurable deformations as a result of the effect of the individual components of the cutting force are illustrated in Fig. 3, the two strips R_z are designed

Card 2/11

APPROVED FOR RELEASE: 06/15/2000 CIA-RDP86-00513R001239810011-5"

"APPROVED FOR RELEASE: 06/15/2000 CIA-RDP86-00513R001239810011-5

for recording the tangential components of the cutting force and the two strips R_x are designed to record the radial components. Finally, the strips R_y are designed for measuring the axial components. The characteristics of this dynamometer are as follows:

Table 1:

Cutting-force components	P_z	P_x	P_y
Range of forces, kg	800	250	250
Sensitivity, kg	4	1.6	2
Rigidity of the dynamometer, kg/μ	32	12.5	13.5

Diameter of the milling head at the tip of the cutting tool: 200 mm.

By means of this dynamometer, the effect was investigated of the machining conditions on the individual components of the cutting force. The effect of the machining speed is shown in

APPROVED FOR RELEASE: 06/15/2000 CIA-RDP86-00513R001239810011-5"

"APPROVED FOR RELEASE: 06/15/2000 CIA-RDP86-00513R001239810011-5

89744

Cutting Forces Z/032/61/011/001/005/008
E073/E335

Fig. 5 for feed rates s_z = 0.18 mm and 0.14 mm per tooth.
The tool geometry was as follows:
$\gamma = +10^\circ$; $\lambda = +15^\circ$; $\alpha = 10^\circ$; $\gamma_f = -10^\circ$; $f = 1$ mm;
$\varkappa = 60^\circ$; $\varkappa_p = 30^\circ$; $\varkappa_1 = 5^\circ$;
Depth of cut: $t = 4$ mm
Machined material: 12 060 steel.
The results obtained on the effect of the front rake angle, γ, on the cutting-force components for various feed rates are plotted in Fig. 6 for feed rates s_z = 0.25, 0.12 and 0.04 mm per tooth. For the following machining conditions $v = 140$ m/min, $t = 4$ mm, tool geometry: $\lambda = +15^\circ$; $\alpha = 10^\circ$; $\varkappa = 60^\circ$; $\varkappa_p = 30^\circ$, $\varkappa_1 = 5^\circ$, the influence of the tool-setting angle was investigated for $\varkappa$ = 15, 30, 45, 60, 75 and 90° for feeds of s_z = 0.04 - 0.25 mm; the cutting speed was 140 m/min. The tool geometry was as follows: $\gamma = +10^\circ$; $\lambda = 15^\circ$; $\alpha = 10^\circ$; $\gamma_f = -10^\circ$; $f = 1$ mm; $\varkappa_p = 30^\circ$; $\varkappa_1 = 5^\circ$. The results are given in Fig. 7.

Card 4/11

APPROVED FOR RELEASE: 06/15/2000 CIA-RDP86-00513R001239810011-5"

"APPROVED FOR RELEASE: 06/15/2000 CIA-RDP86-00513R001239810011-5

89744

Z/032/61/011/001/005/008
E073/E335

Cutting Forces .....

The results are also given of the effect of lands 0.1 - 1.0 mm wide, $\gamma_f = -10^\circ$ and -30°, respectively. The author recommends using lands as narrow as possible; from the point of view of tool life it is advisable to use lands of -30° of a width of 1.5 - 2 s_z. There are 11 figures, 2 tables and 2 non-Czech references.

X

ASSOCIATION: Výzkumný ústav obráběcích strojů a obrábění, Praha (Research Institute for Machine Tools and Machining, Prague)

Card 5/11

APPROVED FOR RELEASE: 06/15/2000 CIA-RDP86-00513R001239810011-5"

"APPROVED FOR RELEASE: 06/15/2000 CIA-RDP86-00513R001239810011-5

89744

Z/032/61/011/001/005/008
E073/E335

Cutting Forces .....

Fig. 1:

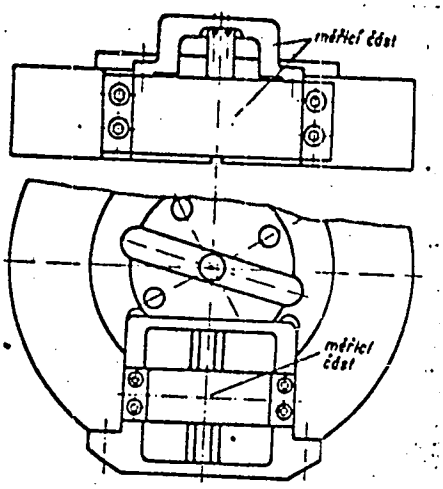

Fig. 2:

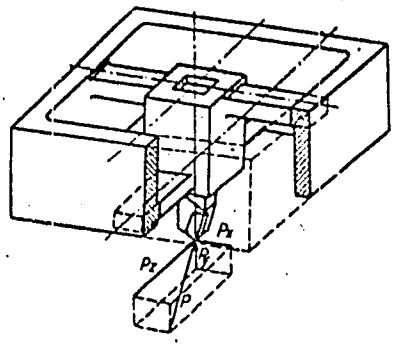

Card 6/11

APPROVED FOR RELEASE: 06/15/2000 CIA-RDP86-00513R001239810011-5"

"APPROVED FOR RELEASE: 06/15/2000 CIA-RDP86-00513R001239810011-5

89744

Z/032/61/011/001/005/008
E073/E335

Cutting Forces .....

Fig. 3:

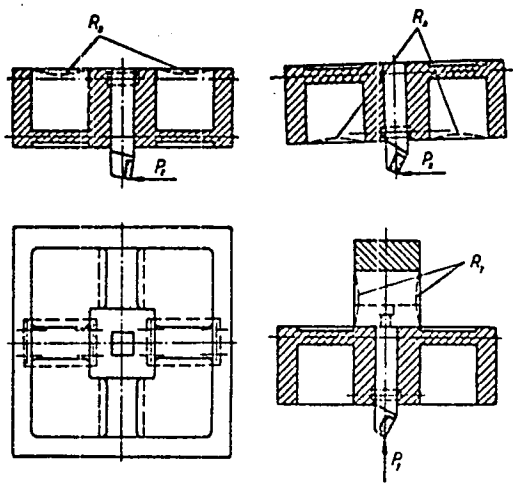

Card 7/11

APPROVED FOR RELEASE: 06/15/2000 CIA-RDP86-00513R001239810011-5"

"APPROVED FOR RELEASE: 06/15/2000 CIA-RDP86-00513R001239810011-5

89744

Cutting Forces .....

Z/032/61/011/001/005/008
E073/E335

Fig. 5:

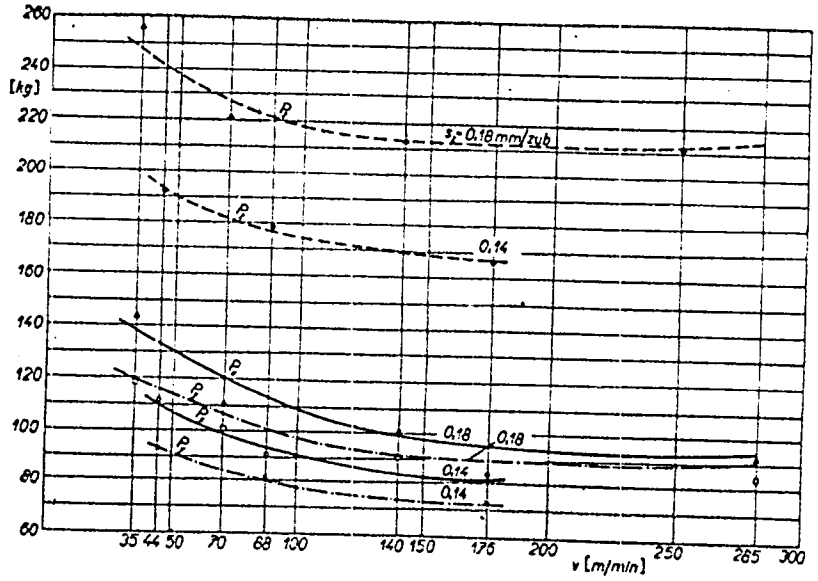

Card 8/11

APPROVED FOR RELEASE: 06/15/2000 CIA-RDP86-00513R001239810011-5"

"APPROVED FOR RELEASE: 06/15/2000 CIA-RDP86-00513R001239810011-5

89744
Z/032/61/011/001/005/008
E073/E335

Cutting Forces .....

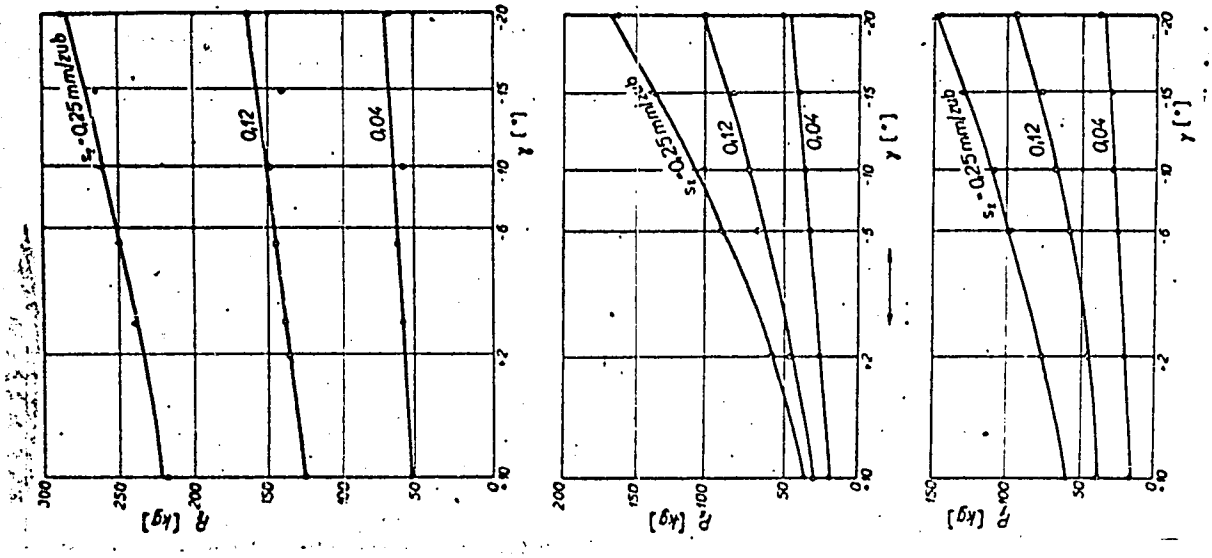

Card 9/11

FIG. 6

APPROVED FOR RELEASE: 06/15/2000 CIA-RDP86-00513R001239810011-5"

"APPROVED FOR RELEASE: 06/15/2000 CIA-RDP86-00513R001239810011-5

89744

Z/032/61/011/001/005/008
E073/E335

Cutting Forces .....

Fig. 7: (top graph)

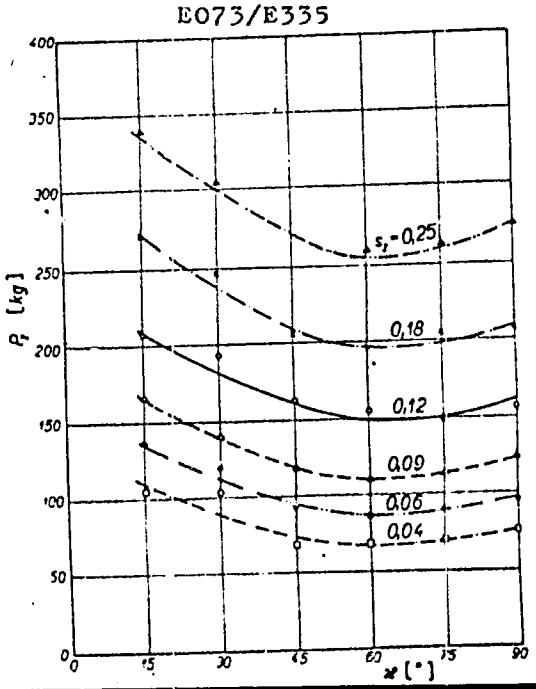

Card 10/11

APPROVED FOR RELEASE: 06/15/2000 CIA-RDP86-00513R001239810011-5"

"APPROVED FOR RELEASE: 06/15/2000 CIA-RDP86-00513R001239810011-5

89744

Z/032/61/011/001/005/008
E073/E335

Cutting Forces .....

Fig. 7: (lower and bottom graphs)

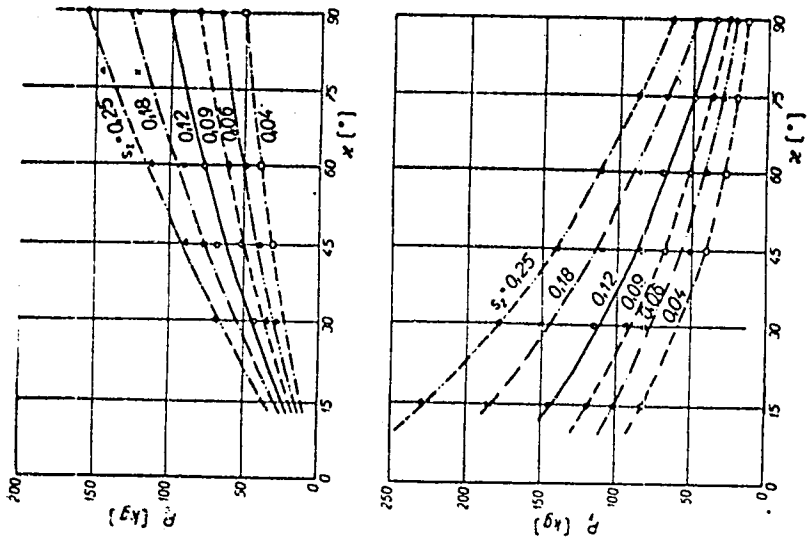

Card 11/11

APPROVED FOR RELEASE: 06/15/2000 CIA-RDP86-00513R001239810011-5"

"APPROVED FOR RELEASE: 06/15/2000 CIA-RDP86-00513R001239810011-5

PECHATY, Karel, inz.

State of the development of carbide-tipped tools in Czechoslovakia. Stroj vyr 12 no.3:162-167 '64.

1. Research Institute of Machine Tools and Machining, Prague.

APPROVED FOR RELEASE: 06/15/2000 CIA-RDP86-00513R001239810011-5"

"APPROVED FOR RELEASE: 06/15/2000 CIA-RDP86-00513R001239810011-5

PECHATY, Karel, inz.; KRIZ, Josef

Adjustment of tools removed from a machine. Stroj vyr 12 no.4:248-251 Ap'64.

1. Research Institute of Machine Tools and Machining, Prague.

APPROVED FOR RELEASE: 06/15/2000 CIA-RDP86-00513R001239810011-5"

"APPROVED FOR RELEASE: 06/15/2000 CIA-RDP86-00513R001239810011-5

PECHATY, K.

Mechanical fastening of carbide tips. p. 451.
STROJIRENSKA VYROBA, Prague, Vol. 3, no. 11, Nov. 1955.

SO: Monthly List of East European Accessions, (EEAL), LC, Vol. 5, No. 6, June 1956, Uncl.

APPROVED FOR RELEASE: 06/15/2000 CIA-RDP86-00513R001239810011-5"

"APPROVED FOR RELEASE: 06/15/2000 CIA-RDP86-00513R001239810011-5

PECHATY, K. - Vol. 3, no. 1, Jan. 1955. STROJIRENSKA VYROBA

New design for cutting edges made with sintered carbide. p. 4.

SO: Monthly list of East European Accessions, (EEAL), LC, Vol. 4, No. 9, Sept. 1955
Uncl.

APPROVED FOR RELEASE: 06/15/2000 CIA-RDP86-00513R001239810011-5"

"APPROVED FOR RELEASE: 06/15/2000 CIA-RDP86-00513R001239810011-5

PECHATY, K.

15236* New Ideas in the Theory and Design of Milling Heads. Nové poznatky z teorie a konstrukce frézovacích hlav. (Czech.) K. Pechatý. *Strojírenství*, v. 5, no. 4, Apr. 1955, p. 276-281. MG

Factors limiting use of sintered carbides for milling; cause and prevention of self-induced vibrations; influence of cutter material on damping of vibrations. Graphs, diagrams, photographs. 4 ref.

APPROVED FOR RELEASE: 06/15/2000 CIA-RDP86-00513R001239810011-5"

"APPROVED FOR RELEASE: 06/15/2000 CIA-RDP86-00513R001239810011-5

Z/006/62/000/001/001/001
D006/D102

AUTHOR: Pechatý, Karel, Engineer

TITLE: Tools with cemented carbide

PERIODICAL: Technické noviny, no. 1, 1962, 5

TEXT: Several turning-tool and milling-cutter types with carbide tips are currently being developed in Czechoslovakia. The tools and cutters under development include: (1) Turning tools with several throw-away type carbide tips; (2) single-edge reamers with an adjustable carbide tip and two carbide guides which eliminate rough-reaming; (3) miller-planer and multi-blade milling heads with a minimum diameter of 110 mm and with blades adjustable radially and axially either directly on the milling machine or with a special adjuster. The adjustment takes 0.5 - 1 min per blade, maximum wobble being 0.03 mm; (4) milling heads 50, 70, and 90 mm in diameter with brazed tips and with adjustment angles of 60 or 90°; (5) side-milling cutters with peripheral teeth which make possible a feed of 800 mm/min at a cutting speed of 300-350 mm/min. During the past few years, the S4, S5, and U1 carbide types for tool tips were developed. The S4 and S5 types have a higher cobalt content and a tantalum-carbide additive, and are designed for rough machining under

Card 1/2

APPROVED FOR RELEASE: 06/15/2000 CIA-RDP86-00513R001239810011-5"

"APPROVED FOR RELEASE: 06/15/2000 CIA-RDP86-00513R001239810011-5

PECHATY, Karel, inz.

Tools with exchangeable tips and their economic importance.
Storj vyr 12 no. 5:324-327 My '64.

1. Research Institute of Machine Tools and Machining, Prague.

APPROVED FOR RELEASE: 06/15/2000 CIA-RDP86-00513R001239810011-5"

"APPROVED FOR RELEASE: 06/15/2000 CIA-RDP86-00513R001239810011-5

PECHATY, Karel, inz.; VODICKA, Ladislav

Operational experience with the lathe tools with exchangeable tips from cemented carbide. Stroj vyr 12 no. 5:328-330 My '64.

1. Research Institute of Machine Tools and Machining, Prague.

APPROVED FOR RELEASE: 06/15/2000 CIA-RDP86-00513R001239810011-5"

"APPROVED FOR RELEASE: 06/15/2000 CIA-RDP86-00513R001239810011-5

PETROVICH, P.G.; SHUSHKINA, E.A.; PECHEN', G.A.

Calculating the production of zooplankton. Dokl. AN SSSR 139 no.5:1235-1238 Ag. '61. (MIRA 14:8)

1. Belorusskiy gosudarstvennyy universitet im. V.I. Lenina. Predstavleno akademikom Ye.N. Pavlovskim.
(Zooplankton)

APPROVED FOR RELEASE: 06/15/2000 CIA-RDP86-00513R001239810011-5"

"APPROVED FOR RELEASE: 06/15/2000 CIA-RDP86-00513R001239810011-5

PECHENIN, V.S., dotsent

Power expenditure on ventilation and water discharge processes in mines. Sbor. nauch. trud. Kem. gor. inst. no.5:165-174 '64. (MIRA 18:3)

1. Gorno-elektromekhanicheskiy fakul'tet Kemerovskogo gornogo instituta.

APPROVED FOR RELEASE: 06/15/2000 CIA-RDP86-00513R001239810011-5"

"APPROVED FOR RELEASE: 06/15/2000 CIA-RDP86-00513R001239810011-5

PECHAYEV, G. K.

CIRCUITS & CIRCUIT ELEMENTS

"Certain Properties of Circuits Containing Thermoresistances", by G.K. Pechayev, Avtomatika i Telemekhanika, No 8, August 1957, pp 740-748

The temperature dependence of the conductance and resistance of two-terminal networks containing thermoresistances were determined by Bleakley (Journal of Scientific Instruments, Vol. 28, No 6, 1951) and Bleuze, for certain specific cases. This article treats a general derivation of expressions for the conductivity and resistance, and indidates under what conditions the relations obtained are close to linear. A method is given for designing temperature compensator for linear resistances.

Card 1/1 - 23 -

APPROVED FOR RELEASE: 06/15/2000 CIA-RDP86-00513R001239810011-5"

"APPROVED FOR RELEASE: 06/15/2000 CIA-RDP86-00513R001239810011-5

POHEL'NIKOV, T.

Know your region. Voen. znan. 41 no.1:32-33 Ja '65. (MIRA 18:2)

1. Direktor Voronezhskoy ob astnoy detskoy ekskursionno-turistskoy stantsii.

APPROVED FOR RELEASE: 06/15/2000 CIA-RDP86-00513R001239810011-5"

"APPROVED FOR RELEASE: 06/15/2000 CIA-RDP86-00513R001239810011-5

L 49799-65 EWT(1)/EEC(b)-2/EWA(h) Pm-4/Pu-4/Pac-4/Peb/Pi-4/Pj-4 JM

ACCESSION NR: AP5010100 UR/0109/65/010/004/0681/0688

34
B

AUTHOR: Loshakov, L. N.; Ol'derogge, Ye. B.; Pchel'nikov, Yu. N.

TITLE: Possibility of obtaining a negative depression factor in TW tubes (Reported at the International Microwave Electronics Congress, Paris, 1964)

SOURCE: Radiotekhnika i elektronika, v. 10, no. 4, 1965, 681-688

TOPIC TAGS: TW tube, depression factor, dispersion equation

ABSTRACT: It was stated in previous authors' works (Rad. i elektronika, 1960, 5, 12, 1968, and 1959, 4, 10, 1670) that, under certain conditions, the depression factor Γ in a TW tube may take on a negative value. The present article considers a particular case when the electron beam is close to the helix and the arguments of the Bessel function are small. In this case, the transcendent dispersion equation (1) of the TW tube may be approximately transformed into an algebraic characteristic equation of the 4th degree. Solution

Card 1/2

APPROVED FOR RELEASE: 06/15/2000 CIA-RDP86-00513R001239810011-5"

"APPROVED FOR RELEASE: 06/15/2000 CIA-RDP86-00513R001239810011-5

L 49799-65
ACCESSION NR: AP5010100

0

of the latter yields this formula for the depression factor:

$$\Gamma = -\frac{(a\tau_0)^2 \ln \frac{1,12}{a\tau_0}}{2 - \frac{1}{\ln \frac{1,12}{a\tau_0}}},$$

whose values may be negative. Peculiarities of behavior of the TW tube, under negative Γ conditions, are analyzed by a numerical solution of the characteristic equation. In addition to the usual field amplification, the TW tube, when its electron velocity is varied, may amplify the space-charge wave without taking power from the electron beam. Orig. art. has 5 figures and 25 formulas.

ASSOCIATION: none

SUBMITTED: 16Mar64 ENCL: 00 SUB CODE: EC

NO REF SOV: 008 OTHER: 002

Card 2/2

APPROVED FOR RELEASE: 06/15/2000 CIA-RDP86-00513R001239810011-5"

"APPROVED FOR RELEASE: 06/15/2000 CIA-RDP86-00513R001239810011-5

PECHEN', P.I.

Material savings in the repair of cars. Zhel.-dor.transp. 45 no.12: 65-69 D '63. (MIRA 17:2)

1. Glavnyy inzh. vagonnogo depo stantsii Tayga Zapadno-Sibirskoy dorogi.

APPROVED FOR RELEASE: 06/15/2000 CIA-RDP86-00513R001239810011-5"

"APPROVED FOR RELEASE: 06/15/2000 CIA-RDP86-00513R001239810011-5

PECHALY, V.D., inzhener.

PECHALY, V.D.

~~Effect of the size~~ of a mixing chamber on the coefficient of injection. Avtog.delo 24 no.5:10-14 My '53. (MLRA 6:5)

1. Vsesoyuznyy nauchno-issledovatel'skiy institut Avtogen.
(Oxyacetylene welding and cutting)

APPROVED FOR RELEASE: 06/15/2000 CIA-RDP86-00513R001239810011-5"

"APPROVED FOR RELEASE: 06/15/2000 CIA-RDP86-00513R001239810011-5

TALYZIN, F.F., prof.; PAVLOVSKIY, Ye.N. [deceased]; VAL'TSEVA, I.A.; PCHELKINA, A.A.; YURKOVA, I.B.

Use of propyl gallic acid, heparin, and hydrocortisone in poisoning of animals with Vipera lebetina venom. Trudy 1-go MMI 41:14-17 '65. (MIRA 18:12)

1. Chlen-korrespondent AMN SSSR (for Talyzin).

APPROVED FOR RELEASE: 06/15/2000 CIA-RDP86-00513R001239810011-5"

"APPROVED FOR RELEASE: 06/15/2000 CIA-RDP86-00513R001239810011-5

UR'YEV, N.B.; PCHELKINA, T.; MIKHAYLOV, N.

A solution glues cement. Grazhd. av. 21, no. 12:26 D '64.
(MIRA 18:12)

APPROVED FOR RELEASE: 06/15/2000 CIA-RDP86-00513R001239810011-5"

"APPROVED FOR RELEASE: 06/15/2000 CIA-RDP86-00513R001239810011-5

PCHEL'NIKOV, A.P.; LOSEV, V.V.

Electrochemical behavior of iridium. Part 1: Cathodic process. Elektrokhimiia 1 no.9:1058-1063 S '65. (MIRA 18:10)

1. Fiziko-khimicheskiy institut imeni L.Ya. Karpova, Moskva.

APPROVED FOR RELEASE: 06/15/2000 CIA-RDP86-00513R001239810011-5"

"APPROVED FOR RELEASE: 06/15/2000 CIA-RDP86-00513R001239810011-5

VINBERG, G.G.; PECHEN', G.A.; SHUSHKINA, E.A.

Production of plankton crustaceans in three different-type lakes. Zool. zhur. 44 no.5:676-687 '65. (MIRA 18:6)

1. Belorusskiy gosudarstvennyy universitet, Minsk.

APPROVED FOR RELEASE: 06/15/2000 CIA-RDP86-00513R001239810011-5"

"APPROVED FOR RELEASE: 06/15/2000 CIA-RDP86-00513R001239810011-5

PECHEN', G.A. (Minsk)

Mass cultivation of [illegible]. Usp. sovr. biol. 53 no. [illegible]
272-279 N-D '61. (MIRA 17:12)

APPROVED FOR RELEASE: 06/15/2000 CIA-RDP86-00513R001239810011-5"

"APPROVED FOR RELEASE: 06/15/2000 CIA-RDP86-00513R001239810011-5

PECHEN', G.A.

Production of Cladocera of lake zooplankton. Gidrobiol. zhur. 1 no.4:19-26 '65. (MIRA 18:10)

1. Belorusskiy gosudarstvennyy universitet im. V.I. Lenina, Minsk.

APPROVED FOR RELEASE: 06/15/2000 CIA-RDP86-00513R001239810011-5"

"APPROVED FOR RELEASE: 06/15/2000 CIA-RDP86-00513R001239810011-5

PECHEN' V.

Sense of cooperation. NTO 2 no.9:44 S '60. (MIRA 13:9)

1. Chlen prezidiuma Ukrainskogo respublikanskogo pravleniya Nauchno-tekhnicheskogo obshchestva legkoy promyshlennosti.
(Lvov--Clothing industry)

APPROVED FOR RELEASE: 06/15/2000 CIA-RDP86-00513R001239810011-5"

"APPROVED FOR RELEASE: 06/15/2000 CIA-RDP86-00513R001239810011-5

PECHENI, V.N., mekhanik-naladchik defektoskopov

Modifying power supply sources. Put.i put.khoz. 6 no.5:45 [illegible]
(MIRA 15:4)

1. Osipovichskaya distantsiya puti Belorusskoy dorogi.
(Storage batteries)

APPROVED FOR RELEASE: 06/15/2000 CIA-RDP86-00513R001239810011-5"

"APPROVED FOR RELEASE: 06/15/2000 CIA-RDP86-00513R001239810011-5

KUZMICHEV, V.I.; PECHEN', V.N., mekhanik-naladchik defektoskopov; POTOPENKO, V.D.; SKREZHENDEVSKIY, Ye.V., dotsent

Results of the testing of a transistorized defectoscope. Put' i put.khoz. 5 no.8:31 Ag '61. (MIRA 14:10)

1. Nachal'nik defektoskopnogo vagona-laboratorii MRD-52 Belorusskoy dorogi (for Kuzmichev). 2. Kafedra elektrotekhniki Belorusskogo instituta inzhenerov zheleznodorozhnogo transporta (for Potapenko). 3. Kafedra "Put' i putevoye khozyaystvo Belorusskogo instituta inzhenerov zheleznodorozhnogo transporta (for Skrezhendevskiy).
(Railroads--Rails--Testing)

APPROVED FOR RELEASE: 06/15/2000 CIA-RDP86-00513R001239810011-5"

"APPROVED FOR RELEASE: 06/15/2000 CIA-RDP86-00513R001239810011-5

PECHENA, G.I. [Pechena, H.I.], assistent; GRISHCHENKO, V.V. [Hryshchenko, V.V.], ordinator

Case of prolonged diabetic coma ending in recovery. Ped., akush. i gin 20 no.4:10-12 '58. (MIRA 13:1)

1. Kafedra pediatrii (zav. - dots. D.L. Sigalov) Kiyevskogo instituta usovershenstvovaniya vrachey (direktor - zasluzhennyy deyatel' nauki prof. I.I. Kal'chenko) i detskoye otdeleniye (zav. - R.N. Krichevskaya) 3-y gorodskoy bol'nitsy (glavnyy vrach D.D. Sergiyenko).
(DIABETES) (COMA)

APPROVED FOR RELEASE: 06/15/2000 CIA-RDP86-00513R001239810011-5"

"APPROVED FOR RELEASE: 06/15/2000 CIA-RDP86-00513R001239810011-5

PECHENAYA E. I.

USSR.

Transfer of ions in solutions of bromides of aluminum and sodium in ethyl bromide. Z. A. Sheka, I. A. Sheka, and E. I. Pechenaya. *Ukrain. Khim. Zhur.* 16, 337-47(1950)(in [illegible]). *C.A.* 44, 6790h.—The investigation was made on solns. contg. from 7.7 to 13.7% $AlBr_3$ and varying amts. of NaBr according to the ratio mole NaBr/mole $AlBr_3$ = 0.2 to 0.9. Following the electrolytic dissocn. the concns. of individual components were detd. analytically, Al as Al_2O_3, Na as Na_2SO_4, and Br by the Volhard method. The results showed that at the ratio R = mole NaBr/mole $AlBr_3$ <0.5 the only potential was 2.1 volts, which corresponded to the deposition potential of Al. At ratio R = 0.6 to 0.9 two potentials were measured, 2.1 and 4.0 volts, which correspond to the deposition potential of Al and Na, resp. At the ratio R = 1.0 only one deposition potential of 4.0 volts was established, which is that of Na. At low ratios of NaBr/$AlBr_3$ Al^{+++}, C_2H_5Br ions, and at high ratios the ions of Na, predominate; anions $AlBr_4^-$ and $Al_3Br_7^-$ are in equilibrium. Transport of Al to the anode of the system NaBr-$AlBr_3$-C_2H_5Br differs from other similar systems in the amt. of the transported Al and in its dependency on the ratio NaBr/$AlBr_3$.

M. O. Holowaty

APPROVED FOR RELEASE: 06/15/2000 CIA-RDP86-00513R001239810011-5"

"APPROVED FOR RELEASE: 06/15/2000 CIA-RDP86-00513R001239810011-5

PECHENAYA, E. I.

(2)

Transport of ions in solutions of aluminum bromide in ethyl bromide. Z. A. Shreka, I. A. Sirka, and E. I. Pechenaya. *Ukrain. Khim. Zhur.* 17, 311-17(1951); cf. *ibid.* 16, 337(1950).—During an investigation of the Friedel-Crafts reaction the migration no. M of each of the ions in the $AlBr_3$-EtBr system was observed in a transference cell (C); M was the ratio of the net change in the no. of equivs. of Al (or Br) in either compartment of C to the no. of faradays passed through C. Values of M for anionic Al and Br were 2.00 and 2.12, resp. In dil. solns. (about 5%) of $AlCl_3$ in $PhNO_2$, $AlBr_3$ in MeCN, and $AlBr_3$ in $MeNO_2$ the values of M for anionic Al and Br in that order were 1.3 and 1.9, 0.6 and 1.3, and 0.6 and 1.3, resp. The $AlBr_3$-EtBr system contains the compd. $AlBr_3.C_2H_5Br$ and such complex ions as $Al(C_2H_5Br)_4^{+++}$ and $(AlBr_4)^-$ or $(Al_2Br_7)^-$.

J. W. Loweberg, Jr.

10-13-54 M.E.F.

APPROVED FOR RELEASE: 06/15/2000 CIA-RDP86-00513R001239810011-5"

"APPROVED FOR RELEASE: 06/15/2000 CIA-RDP86-00513R001239810011-5

PECHENAYA, E. I.

USSR/Chemistry - Inorganic chemistry

Card 1/1 Pub. 116 - 2/24

Authors : Sheka, Z. A., and Pechenaya, E. I.

Title : About the composition of ions of thallium trichloride in methyl alcohol and acetonitrile

Periodical : Ukr. khim. zhur. 21/2, 149-151, 1955

Abstract : The migration of thallium trichloride ions was investigated in acetonitrile and methyl alcohol to determine the electrolytic dissociation of the thallium trichlorine into $TlCl_2^+$ and Cl^-. It was found that Tl and Cl in thallium trichloride solution in the presence of acetonitrile and methyl alcohol migrate toward the anode which indicated a complex anion of the $TlCl_4$ composition. The cathode deposits obtained during electrolysis of these solutions were found to contain metallic Tl and chloride and trichloride Tl which were probably formed during the discharge of the Tl^+, $TlCl^{2+}$ and $TlCl_2^+$ cations. Three references; 2 USSR and 1 USA (1928-1954). Tables.

Institution : Acad. of Sc., Ukr. SSR, Inst. of Gen. and Inorgan. Chem. Lab. of Complex Compounds

Submitted : July 3, 1954

APPROVED FOR RELEASE: 06/15/2000 CIA-RDP86-00513R001239810011-5"

"APPROVED FOR RELEASE: 06/15/2000 CIA-RDP86-00513R001239810011-5

PECHENA, G.I. [Pechena, H.I.], kand.med.nauk

Nondysentery diarrhea in children and methods of treatment. Ped., akush. i gin. 19 no.3:8-13 '57. (MIRA 13:1)

1. Kafedra pediatrii (ispolnyayushchiy obyazannosti zav. kafedroy - dots. D.L. Sigalov) Kiyevskogo instituta usovershenstvovaniya vrachey (dir. - zasluzhennyy deyatel' nauki prof. I.I. Kal'chenko).
(DIARRHEA)

APPROVED FOR RELEASE: 06/15/2000 CIA-RDP86-00513R001239810011-5"

"APPROVED FOR RELEASE: 06/15/2000 CIA-RDP86-00513R001239810011-5

YASINOVSKIY, M.A., prof., zasluzhennyy deyatel' nauki; PECHENAYA, R.B. (Odessa)

Rheumatic fever and the thyroid gland. Probl.endok. i gorm. 5 no.3:57-68 My-Je '59. (MIRA 12:9)

1. Iz gospital'noy i fakul'tetskoy terapevticheskoy kliniki (zav. - zasluzhennyy deyatel' nauki prof.M.A.Yasinovskiy) Odesskogo meditsinskogo instituta imeni N.I.Pirogova (dir. - zasluzhennyy deyatel' nauki prof.I.Ya.Deyneka).

(RHEUMATIC FEVER, physiol.
thyroid gland funct. (Rus))
(THYROID GLAND, in various dis.
rheum. fever (Rus))

APPROVED FOR RELEASE: 06/15/2000 CIA-RDP86-00513R001239810011-5"

"APPROVED FOR RELEASE: 06/15/2000 CIA-RDP86-00513R001239810011-5

SOBOLEV, Leonid Georgiyevich; PECHENENKO, V.I., kand.tekhn.nauk, dots., retsenzent; MARTYANOVA, I.Ya., red.
[Automatic regulation of fuel combustion in marine boilers] Avtomaticheskoe regulirovanie toplivoszhiganiia v sudovykh kotlakh. Moskva, Transport, 1965. 198 p. (MIRA 18:2)

APPROVED FOR RELEASE: 06/15/2000 CIA-RDP86-00513R001239810011-5"

"APPROVED FOR RELEASE: 06/15/2000 CIA-RDP86-00513R001239810011-5

ACC NR: AR6026523 SOURCE CODE: UR/0372/66/000/004/G008/G008

AUTHOR: Pechenenko, V. I.; Maslenko, Ye. A.

TITLE: A method of engineering calculation of nonlinear automatic systems

SOURCE: Ref. zh. Kibernetika, Abs. 4G63

REF SOURCE: Avtomatiz. proizv. protsessov v mashinostr. i priborostr. Mezhved. resp. nauchno-tekhn. sb., vyp. 2, 1965, 12-18

TOPIC TAGS: nonlinear automatic control system, harmonic oscillation, servomotor, friction

ABSTRACT: An approximate graph-analytic frequency method of determining the parameters of the natural oscillations of non linear systems is proposed. The method is based on the harmonic balance method. The stability of the derived periodic solutions is investigated. Further, the article presents an example of the determination of natural oscillations in a system with three nonlinearities which are determined by backlash in the transmission from the servomotor to the control unit and by dry friction in the servomotor and measuring-amplifying element. 4 illustrations. Bibliography of 4 titles. V. S. [Translation of abstract]

SUB CODE: 09

UDC: 62-501.3

Card 1/1

APPROVED FOR RELEASE: 06/15/2000 CIA-RDP86-00513R001239810011-5"

"APPROVED FOR RELEASE: 06/15/2000 CIA-RDP86-00513R001239810011-5

S/064/63/000/002/003/005
B117/B186

AUTHORS: Mushiy, R. Ya., Moshkovich, F. B., Pechenizhskaya, V. N., Popova, V. P., Mogilevskaya, L. N.

TITLE: Explosive decomposition of diacetylene and its mixtures

PERIODICAL: Khimicheskaya promyshlennost', no. 2, 1963, 29 - 31

TEXT: Diacetylene obtained from dichlorobutyne by a method described earlier (Ukr. khim. zh. (in press)) was used to study the explosiveness of pure diacetylene and its mixtures with other gases. The experiments were made in a glass device (B. B. Brandt, L. A. Matov, A. I. Rozlovskiy, V. S. Khaylov, Khim. prom. no. 5, 415 (1960)) at 20 - 25°C and 1 at. Ignition was made either with an electric spark or by burning through a nichrome wire. It was found that diacetylene purified chromatographically explodes at a lower pressure than doubly distilled diacetylene which apparently contains chlorine derivatives. The critical pressure for the explosive decomposition of pure diacetylene is 30 - 33 mm Hg, irrespective of the type of initiation. Studies of a diacetylene mixture with acetylene showed that an increase of the total pressure is of little effect and may even decrease the critical diacetylene content due to the simultaneous

Card 1/2

APPROVED FOR RELEASE: 06/15/2000 CIA-RDP86-00513R001239810011-5"

"APPROVED FOR RELEASE: 06/15/2000 CIA-RDP86-00513R001239810011-5

decomposition of acetylene. Limits of the diacetylene content in other gas mixtures at a total pressure of 700 mm Hg are (in % by volume): for nitrogen 22% with nichrom wire ignition and 25% with electric-spark ignition for hydrogen and carbon oxide 30%; for ammonia 37%; for carbon dioxide 35%, and for natural gas 39% which among the gases studied has the highest stabilizing effect. The lowest critical diacetylene content was found in the mixture with acetylene. At 700 mm Hg it was 16.5 - 17 % by volume. When the total pressure was further increased the critical diacetylene content became lower in contrast to other mixtures where it remained almost constant beginning from 500 to 600 mm Hg. The small stabilizing effect of acetylene and the decrease of the critical diacetylene content with increased pressure, apparently is related to the decomposition of acetylene initiated by the decomposition of diacetylene. There are 7 figures.

APPROVED FOR RELEASE: 06/15/2000 CIA-RDP86-00513R001239810011-5"

"APPROVED FOR RELEASE: 06/15/2000 CIA-RDP86-00513R001239810011-5

PECHENIK, B.Ya., inzh.

Expediency of the construction of steam turbines on foundations without scraper inserts and permanent gaskets. Energ. stroi. no.42:24-28 '64. (MIRA 18:3)

APPROVED FOR RELEASE: 06/15/2000 CIA-RDP86-00513R001239810011-5"

"APPROVED FOR RELEASE: 06/15/2000 CIA-RDP86-00513R001239810011-5

PECHENIK, B.Ya., inzh.

Construction of electrolytic apparatus in electric power plants. Energ. stroi. no.32:26-29 '62. (MIRA 16:5)

1. Leningradskiy filial Vsesoyuznogo instituta po proyektirovaniyu organizatsii energeticheskogo stroitel'stva.

APPROVED FOR RELEASE: 06/15/2000 CIA-RDP86-00513R001239810011-5"

"APPROVED FOR RELEASE: 06/15/2000 CIA-RDP86-00513R001239810011-5

LYSTSOV, A.I.; PECHENIK, T.S.; TIMOFEYEVA, O.I.

Dehydration of lower crystal hydrates of magnesium chloride in a fluidized bed in a flow of hydrogen chloride. TSvet. met. 38 no.1:62-66 Ja '65 (MIRA 18:2)

APPROVED FOR RELEASE: 06/15/2000 CIA-RDP86-00513R001239810011-5"

"APPROVED FOR RELEASE: 06/15/2000 CIA-RDP86-00513R001239810011-5

ESCHENIK, Ye.

[illegible] required by honorary awards. Mor. flot 25 no.9:3-4 S '65. (MIRA 18:9)

1. Starshiy inzhener gruppy tekhnicheskoy informatsii Chernomorskogo parokhodstva.

APPROVED FOR RELEASE: 06/15/2000 CIA-RDP86-00513R001239810011-5"

"APPROVED FOR RELEASE: 06/15/2000 CIA-RDP86-00513R001239810011-5

PECHENIN, A.A., inzh.

Portable TSF-1 transformer for welding at assembly sites. Svar.proizv. no.11:41 N '64. (MIRA 18:1)

1. Vsesoyuznyy nauchno-issledovatel'skiy institut elektrosvarochnogo oborudovaniya.

APPROVED FOR RELEASE: 06/15/2000 CIA-RDP86-00513R001239810011-5"

"APPROVED FOR RELEASE: 06/15/2000 CIA-RDP86-00513R001239810011-5

GROMOV, L.K., kand.tekhn.nauk; KONDAKOV, N.P., dots.; PECHUGIN, D.A., dots. (Novosibirsk)

Mechanizing operations in major track overhauling. Put' i put. khoz. 4 no.3:22 Mr '60. (MIRA 13:5)
(Railroads--Maintenance and repair)

APPROVED FOR RELEASE: 06/15/2000 CIA-RDP86-00513R001239810011-5"

"APPROVED FOR RELEASE: 06/15/2000 CIA-RDP86-00513R001239810011-5

PECHENENKO, V., kand.tekhn.nauk, dotsent; KOZ'MINYKH, G., assistent

Efficiency of the automatized boiler system on ships of the type of the "S.Botkin"steamboat. Mor.flot 21 no.1:24-28 Ja '61. (MIRA 14:6)

1. Odesskoye vysshoye inzhenernoye morskoye uchilishche (for Pechenenko).

(Boilers, Marine)

APPROVED FOR RELEASE: 06/15/2000 CIA-RDP86-00513R001239810011-5"

"APPROVED FOR RELEASE: 06/15/2000 CIA-RDP86-00513R001239810011-5

ANDROSOV, Boris Innokent'yevich; BOGOSLOVSKIY, Andrey Mikhaylovich; NATVEYEV, Yevgeniy Nikolayevich; PECHENENKO, Viktor Ivanovich; SAPRYKIN, Aleksey Petrovich. Prinimali uchastiye: KOTHER, R.I.; PLAKSIONOV, N.P. LUBOCHKIN, B.I., obshchiy red.; ALEKSANDROV, L.A., red.izd-va; TIKHONOVA, Ye.A., tekhn.red.

[Manual for third-class mechanics of marine steamships] Uchebnoe posobie dlia mekhanika III razriada morskikh parovykh sudov. Pod red. B.I.Lubochkina. Izd.2., perer. Moskva, Izd-vo "Morskoi transport," 1958. 646 p. (MIRA 12:7)
(Steamboats) (Marine engineering)

APPROVED FOR RELEASE: 06/15/2000 CIA-RDP86-00513R001239810011-5"