"APPROVED FOR RELEASE: 06/15/2000 CIA-RDP86-00513R001240020013-8

NESMEYANOV, A.N.; PEREVALOVA, E.G.; LEONT'YEVA, L.I.; USTYNYUK, Yu.A.

Ferrocenylmethylthiol and methyl(ferrocenylmethyl) sulfide.
Izv. AN SSSR. Ser. khim. no.9:1696-1697 '65. (MIRA 18:9)

1. Moskovskiy gosudarstvennyy universitet.

APPROVED FOR RELEASE: 06/15/2000 CIA-RDP86-00513R001240020013-8"

"APPROVED FOR RELEASE: 06/15/2000 CIA-RDP86-00513R001240020013-8

L 55127-65 EWT(m)/EPF(c)/T/EWP(j) Pc-4/Pr-4 RM
ACCESSION NR: AP5012767 UR/0020/65/161/006/1349/1351

AUTHOR: Nesmeyanov, A. N.; Kursanov, D. N. (Corresponding member AN SSSR); Nefedova, M. N.; Setkina, V. N.; Perevalova, E. G.

36
35
B

TITLE: The replacement of a halogen by a proton in halogenoferrocenes

SOURCE: AN SSSR. Doklady, v. 161, no. 6, 1965, 1349-1351

TOPIC TAGS: halogen, ferrocene, deuterium

ABSTRACT: In studying the isotopic exchange of hydrogen in acid media an unexpected reaction of iodoferrocene with the acid was detected. In treating solutions of iodoferrocene in organic solvents (benzene, methylene chloride) with deuterotrifluoroacetic acid (95 atomic percent deuterium) there is a rapid formation of the ferricine cation and a complex compound of iodoferrocene with iodine. The ferricine cation after reduction by sodium sulfite yields ferrocene containing 9.5 atomic percent deuterium, which corresponds exactly to the replacement of the iodine atom by deuterium. In the case of bromo- and chloroferrocene the substitution of deuterium for the halogen also is observed but to a lesser extent than with iodoferrocene. For the tests 1 ml of deuterotrifluoroacetic acid (95 atomic percent deu-

Card 1/2

APPROVED FOR RELEASE: 06/15/2000 CIA-RDP86-00513R001240020013-8"

"APPROVED FOR RELEASE: 06/15/2000 CIA-RDP86-00513R001240020013-8

L 55127-65

ACCESSION NR: AP5012767

terium, boiling point of 71-72°) which had been previously saturated with nitrogen was added to a solution of 0.6 grams (0.0019 mol) of iodoferrocene (melting point of 45-46°, from methanol) in 1.5 ml of benzene in a stream of pure dry nitrogen. Immediately a violet color appeared and a black-violet precipitate settled out. After 1-2 hours the precipitate was removed and the ferricine cation was extracted from the filtrate with water. The aqueous blue extract was treated with sodium sulfite until a yellow color appeared and was extracted with ether. After driving off the ether the yield was 0.09 grams (0.005 mol) of ferrocene. The precipitate was washed with benzene and purified through sublimation in a vacuum. The bromoferrocene and chloroferrocene were treated in a generally similar manner. Orig. art. has: two sets of equations.

ASSOCIATION: Institut elementoorganicheskogo sinteza Akademii nauk SSSR (Institute of Elementoorganic Synthesis, Academy of Sciences, SSSR)

SUBMITTED: 23Oct64 ENCL: 00 SUB CODE: GC, OC

NO REF SOV: 005 OTHER: 005

Card 2/2

APPROVED FOR RELEASE: 06/15/2000 CIA-RDP86-00513R001240020013-8"

"APPROVED FOR RELEASE: 06/15/2000 CIA-RDP86-00513R001240020013-8

GUBIN, S.P.; GRANDBERG, K.I.; PEREVALOVA, E.G.; NESMEYANOV, A.N., akademik

Transannular electron effects in the ferrocenyl nucleus. Association constants of substituted ferrocenecarboxylic acids. (MIRA 18:1)
Dokl. AN SSSR 159 no.5:1075-1078 D '64

1. Institut elementoorganicheskikh soyedineniy AN SSSR i Moskovskiy gosudarstvennyy universitet.

APPROVED FOR RELEASE: 06/15/2000 CIA-RDP86-00513R001240020013-8"

"APPROVED FOR RELEASE: 06/15/2000 CIA-RDP86-00513R001240020013-8

L 24842-65 EWT(m)/EPF(c)/EWP(j) Pc-4/Pr-4 RPL RM/JW

ACCESSION NR: AP4047404 S/0062/64/000/010/1897/1899

AUTHOR: Nesmeyanov, A. N.; Perevalova, E. G.; Yur'yeva, L. P.; Kakurina, L. N.

TITLE: Investigation of the reaction products of the cyanation of methyl and ethylferrocene

SOURCE: AN SSSR. Izvestiya. Seriya khimicheskaya, no. 10, 1964, 1897-1899

TOPIC TAGS: alkylferrocene, cyanation, cyanidation, alkylferrocene nitrile, alkylferrocene acid amide

ABSTRACT: Earlier work (A. N. Newmejanow, E. G. Perewalowa, L. P. Jurjewa, Ber. 93, 2729 (1960); Ye. G. Perevalova, L. P. Yur'yeva and Yu. I. Baukov, Dokl. AN SSSR 135, 1402 (1960)) on cyanation of ferrocene derivatives to obtain predominantly heteroannular isomeric nitriles was continued. The mixtures of nitriles obtained by cyanidation of methyl or ethylferrocene were converted to the corresponding amides in 60-75% yield by alkaline hydrolysis in the presence of hydrogen peroxide. The 1, 2-, 1, 3- and 1, 1'-methyl- and ethylferrocene carboxylic acid amides were chromatographically separated on Al_2O_3, and

Card 1/2

APPROVED FOR RELEASE: 06/15/2000 CIA-RDP86-00513R001240020013-8"

"APPROVED FOR RELEASE: 06/15/2000 CIA-RDP86-00513R001240020013-8

L 24842-65
ACCESSION NR: AP4047404

converted to the corresponding nitriles by boiling in toluene with P_2O_5. Identification was made by IR and u. v. spectra and oxidation reduction potentials. The adsorption of the isomeric amides increased in the series 1,2 1,1'- 1,3. Orig. art. has: 2 tables

ASSOCIATION: Institut elementoorganicheskikh soyedineniy Akademii nauk SSSR (Institute of Organometallic Compounds Academy of Sciences SSSR) Moskovskiy gosudarstvenny*y universitet im. M. V. Lomonosova (Moscow State University)

SUBMITTED: 03Mar64 ENCL: 00

SUB CODE: GC, OC NO REF SOV: 003 OTHER: 005

Card2/2

APPROVED FOR RELEASE: 06/15/2000 CIA-RDP86-00513R001240020013-8"

"APPROVED FOR RELEASE: 06/15/2000 CIA-RDP86-00513R001240020013-8

L 24843-65 EWT(m)/EPF(c)/EWP(j)/T Pc-4/Pr-4 SSD(c)/AFMD(t)/RPL RM/JW

ACCESSION NR: AP4047406 S/0062/64/000/010/1903/1905

AUTHOR: Nesmeyanov, A. N.; Perevalova, E. G.; Grandberg, K. I.

TITLE: Synthesis of certain heteroannular substituted ferrocene carboxylic acids

SOURCE: AN SSSR. Izvestiya. Seriya khimicheskaya, no. 10, 1964, 1903-1905

TOPIC TAGS: ferrocene carboxylic acid, synthesis, cyanoferrocene carboxylic acid, IR spectrum, cyanoferrocene

ABSTRACT: Heteroannular chloro-, bromo-, cyano- and methoxyferrocene carboxylic acids and their methyl esters were synthesized from the corresponding substituted ferrocene carboxylic acid nitriles which had been prepared by cyanation of the ferrocenes in tetrahydrofuran in the presence of $FeCl_3$. The heteroannular isomers were crystallized from the reaction mixtures of hetero- and homoannular nitriles, and were identified by their IR spectra. The nitriles of the chloro- and bromoferrocene carboxylic acids were hydrolysed with aqueous alcoholic alkali to their corresponding acids. The methyl ester of 1, 1'-cyanoferrocene

Card 1/2

APPROVED FOR RELEASE: 06/15/2000 CIA-RDP86-00513R001240020013-8"

"APPROVED FOR RELEASE: 06/15/2000 CIA-RDP86-00513R001240020013-8

L 24843-65
ACCESSION NR: AP4047406

carboxylic acid was hydrolysed to 1,1'-cyanoferrocene carboxylic acid. 1,1'-Methoxyferrocene carboxylic acid was obtained by reaction of 1,1'-acetoxyferrocene carboxylic acid with dimethylsulfate. The methyl esters of these substituted ferrocene carboxylic acids were obtained by reaction with ethereal solutions of diazomethane. Orig. art. has: 1 table and 3 equations.

ASSOCIATION: Moskovskiy gosudarstvenny*y universitet im. M. V. Lomonosova (Moscow State University)

SUBMITTED: 04Mar64 ENCL: 00

SUB CODE: GC, OC NO REF SOV: 003 OTHER: 001

Card 2/2

APPROVED FOR RELEASE: 06/15/2000 CIA-RDP86-00513R001240020013-8"

"APPROVED FOR RELEASE: 06/15/2000 CIA-RDP86-00513R001240020013-8

L 24844-65 EWT(m)/EPF(c)/EWP(j)/T Pc-4/Pr-4 AFETR RM

ACCESSION NR: AP4047405 S/0062/64/000/010/1901/1903

21
20
B

AUTHOR: Perevalova, E. G.; Reshetova, M. D.; Grandberg, K. I.; Nesmeyanov, A. N.

TITLE: Synthesis of heteroannular alkylferrocenylcarbinols

SOURCE: AN SSSR. Izvestiya. Seriya khimicheskaya, no. 10, 1964, 1901-1903

TOPIC TAGS: heteroannular alkylferrocenylcarbinol, synthesis, physical property, Friedel Crafts reaction

ABSTRACT: The heteroannular ethyl-, n-propyl, n-butyl- and benzylferrocenylcarbinols were synthesized according to the following reactions:

$$C_5H_5FeC_5H_4COOCH_3 \xrightarrow[AlCl_3]{RCOCl} RCOC_5H_4FeC_5H_4COOCH_3 \xrightarrow{Zn/Hg} \xrightarrow{Zn/Hg} RCH_2C_5H_4FeC_5H_4COOCH_3 \xrightarrow{LiAlH_4} RCH_2C_5H_4FeC_5H_4CH_2OH$$

$$R = CH_3,\ C_2H_5,\ n\text{-}C_3H_7,\ C_6H_5$$

Card 1/2

APPROVED FOR RELEASE: 06/15/2000 CIA-RDP86-00513R001240020013-8"

"APPROVED FOR RELEASE: 06/15/2000 CIA-RDP86-00513R001240020013-8

L 24844-65
ACCESSION NR: AP4047405

The methyl ester of ferrocene carboxylic acid was acylated by the Friedel-Crafts reaction, the ketone was reduced with zinc amalgam, and the reduction of 0.004M solutions in ether of the alkylated methyl esters was then effected by heating with 0.002 M suspensions of lithium aluminum hydride in absolute alcohol. The reaction mixtures were separated, the ether solutions were water-washed, and the products were chromatographed on Al_2O_3. The ethyl and propylferrocene carbinols were vacuum distilled at 10^{-3} mm and the butyl and benzyl derivatives were crystallized from hexane. The boiling points and refractive indices of the final and intermediate products are tabulated. Orig. art. has: 2 tables and 1 equation.

ASSOCIATION: Moskovskiy gosudarstvenny*y universitet im. M. V. Lomonosova (Moscow State University)

SUBMITTED: 14Mar64 ENCL: 00

SUB CODE: GC, OC NO REF SOV: 002 OTHER: 002

Card 2/2

APPROVED FOR RELEASE: 06/15/2000 CIA-RDP86-00513R001240020013-8"

"APPROVED FOR RELEASE: 06/15/2000 CIA-RDP86-00513R001240020013-8

PEREVALOVA, E.G.; USTYNYUK, Yu.A.

Reactivity of compounds containing a ferrocenylmethyl group. Report No.3: Reactions of quaternary ammonium salts with organomagnesium compounds in the presence of cobaltous chloride. Izv. AN SSSR Ser.khim. no.10:1776-1782 O '63. (MIRA 17:3)

1. Institut elementoorganicheskikh soyedineniy AN SSSR.

APPROVED FOR RELEASE: 06/15/2000 CIA-RDP86-00513R001240020013-8"

"APPROVED FOR RELEASE: 06/15/2000 CIA-RDP86-00513R001240020013-8

USTYNYUK, Yu.A.; PEREVALOVA, E.G.

Reactivity of compounds containing a ferrocenylmethyl group. Report No.7: Rearrangement of dimethylbenzyl (ferrocenylmethyl) ammonium chloride under the effect of nucleophilic reagents. Izv.AN SSSR. Ser.khim. no.1:62-69 Ja '64. (MIRA 17:4)

1. Institut elementoorganicheskikh soyedineniy AN SSSR i Moskovskiy gosudarstvennyy universitet im. M.V.Lomonosova.

APPROVED FOR RELEASE: 06/15/2000 CIA-RDP86-00513R001240020013-8"

"APPROVED FOR RELEASE: 06/15/2000 CIA-RDP86-00513R001240020013-8

USTYNYUK, Yu.A.; PEREVALOVA, E.G.; NESMEYANOV, A.N.

Reactivity of compounds containing a ferrocenylmethyl group. Report No.8: Wittig rearrangement in the ferrocenylcarbinol ether series. Izv.AN SSSR. Ser.khim. no.1:70-73 Ja '64. (MIRA 17:4)

1. Institut elementoorganicheskikh soyedineniy AN SSSR i Moskovskiy gosudarstvennyy universitet im. M.V.Lomonosova.

APPROVED FOR RELEASE: 06/15/2000 CIA-RDP86-00513R001240020013-8"

"APPROVED FOR RELEASE: 06/15/2000 CIA-RDP86-00513R001240020013-8

NESMEYANOV, A.N.; NIKITINA, T.V.; PEREVALOVA, E.G.

Condensation of ferrocenylamine with nitrosobenzene. Izv.AN SSSR. Ser.khim. no.1:197-199 Ja '64. (MIRA 17:4)

1. Moskovskiy gosudarstvennyy universitet i Institut elementoorganicheskikh soyedineniy AN SSSR.

APPROVED FOR RELEASE: 06/15/2000 CIA-RDP86-00513R001240020013-8"

"APPROVED FOR RELEASE: 06/15/2000 CIA-RDP86-00513R001240020013-8

NESMEYANOV, A.N.; PEREVALOVA, E.G.; YUR'YEVA, L.P.; KAKURINA, L.N.

Reaction products of cyanidation of methyl- and ethylferrocene. Izv. AN SSSR. Ser. khim. no.10:1897-1899 O '64. (MIRA 17:12)

1. Institut elementoorganicheskikh soyedineniy AN SSSR i Moskovskiy gosudarstvennyy universitet im. Lomonosova.

APPROVED FOR RELEASE: 06/15/2000 CIA-RDP86-00513R001240020013-8"

"APPROVED FOR RELEASE: 06/15/2000 CIA-RDP86-00513R001240020013-8

NESMEYANOV, A.N.; PEREVALOVA, E.G.; GRANDBERG, K.I.

Synthesis of some heteroannular substituted ferrocenecarboxylic acids. Izv. AN SSSR. Ser. khim. no.10:1903-1905 O '64. (MIRA 17:12)

1. Moskovskiy gosudarstvennyy universitet.

APPROVED FOR RELEASE: 06/15/2000 CIA-RDP86-00513R001240020013-8"

"APPROVED FOR RELEASE: 06/15/2000 CIA-RDP86-00513R001240020013-8

NESMEYANOV, A.N.; KOZLOVSKIY, A.G.; GUBIN, S.P.; PEREVALOVA, E.G.

Protolysis of mercury derivatives of ferrocene. Izv. AN SSSR. Ser. khim. no.3:580 '65. (MIRA 18:5)

1. Moskovskiy gosudarstvennyy universitet im. M.V.Lomonosova i Institut elementoorganicheskikh soyedineniy AN SSSR.

APPROVED FOR RELEASE: 06/15/2000 CIA-RDP86-00513R001240020013-8"

"APPROVED FOR RELEASE: 06/15/2000 CIA-RDP86-00513R001240020013-8

L 61653-65 EWT(m)/EPF(c)/EPR/EWP(j)/EWA(c) Pc-4/Pr-4/Ps-4 RPL
WW/RM

ACCESSION NR: AP5015590 UR/0062/65/000/005/0907/0909
542.91+547.13+546.72

AUTHOR: Nesmeyanov, A. N.; Perevalova, E. G.; Yur'yeva, L. P.

TITLE: A study of the products of cyanation of phenylferrocene

SOURCE: AN SSSR. Izvestiya. Seriya khimicheskaya, no. 5, 1965, 907-909

TOPIC TAGS: ferrocene, amide synthesis, carboxylic acid, iron organic compound, ferrocenyl benzamide, cyanation product, heterorganic nitrile, column chromatography

ABSTRACT: A mixture of nitriles of phenylferrocenecarboxylic acids, obtained by cyanating phenylferrocene, was hydrolyzed by alkali in the present of hydrogen peroxide to a mixture of the corresponding amides, from which the amides of 1,2-, 1,3-, and 1,1'-phenylferrocenecarboxylic acid were separated by chromatography on alumina. The yields of the isomeric amides, their melting points, and R_f values in various systems are tabulated. To establish the structure of the amides, use was made of UV and IR spectra, redox potentials, and data on the relative adsorption capacity on alumina. No p-ferrocenylbenzamide was found in the reaction

Card 1/2

APPROVED FOR RELEASE: 06/15/2000 CIA-RDP86-00513R001240020013-8"

"APPROVED FOR RELEASE: 06/15/2000 CIA-RDP86-00513R001240020013-8

L 61653-65
ACCESSION NR: AP5015590

products. Hence, when phenylferrocene is cyanated, the nitrile group enters exclusively into the ferrocene ring. p-Ferrocenylbenzamide was synthesized from p-ferrocenylbenzoic acid by the successive action of thionyl chloride and ammonia:

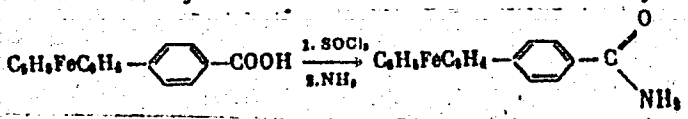

The properties of p-ferrocenylbenzamide (UV spectrum, redox potential) differ strongly from those of the amides of phenylferrocenecarboxylic acids. The procedure employed in the synthesis is described. Orig. art. has: 1 table and 2 formulas.

ASSOCIATION: Institut elementoorganicheskikh soyedineniy Akademii nauk SSSR (Institute of Organometallic Compounds, Academy of Sciences, SSSR)

SUBMITTED: 29Jul64 ENCL: 00 SUB CODE: OC

NO REF SOV: 004 OTHER: 004

Card 2/2

APPROVED FOR RELEASE: 06/15/2000 CIA-RDP86-00513R001240020013-8"

"APPROVED FOR RELEASE: 06/15/2000 CIA-RDP86-00513R001240020013-8

L 61652-65 EWT(m)/EPF(c)/EPR/EWP(j)/T/EWA(c) Pc-4/Pr-4/Ps-4
WW/RM

ACCESSION NR: AP5015591 UR/0062/65/000/005/0909/0911
547.13+546.72+543.422+537.561

43
39
B

AUTHOR: Nesmeyanov, A. N.; Perevalova, E. G.; Yur'yeva, L. P.; Gubin, S. P.

TITLE: Oxidation-reduction potentials and ultraviolet and visible absorption spectra of certain homoannular disubstituted ferrocenes

SOURCE: AN SSSR. Izvestiya. Seriya khimicheskaya, no. 5, 1965, 909-911

TOPIC TAGS: ferrocene, redox potential, ultraviolet absorption spectrum, homoannular compound, heteroorganic amide, heteroorganic nitrile

ABSTRACT: The redox potentials were determined by oxidative potentiometric titration with $K_2Cr_2O_7$ in the mixture CH_3COOH - $HClO_4$, and were compared with values calculated on the basis of additivity. The largest deviations from additivity were displayed by the 1,2-isomeric amides of alkyl- and phenyl-substituted ferrocenecarboxylic acids. The determination of redox potentials was shown to be a convenient method of determining the structure of homoannular disubstituted ferrocenes in which at least one substituent is conjugated with the five-membered ring. UV and visible absorption spectra of the amides of ferrocenecarboxylic acids showed that the absorption peaks almost coincide, but the absorption inten-

Card 1/2

APPROVED FOR RELEASE: 06/15/2000 CIA-RDP86-00513R001240020013-8"

"APPROVED FOR RELEASE: 06/15/2000 CIA-RDP86-00513R001240020013-8

L 61652-65
ACCESSION NR: AP5015591

4

sity changes considerably from one isomer to another. As in the case of the redox potentials, the lowest absorption intensity, exhibited by the spectrum of the amide of 1,2-ethylferrocenylcarboxylic acid, indicates the present of steric hindrance (caused by the neighboring ethyl group) in the conjugation between the amide group and the five-membered aromatic ring. In contrast to the amide group, the nitrile group has a linear structure, and its conjugation with the aromatic ring is not affected by the neighboring bulky substituent; for this reason, no appreciable differences are found in the spectra of nitriles of isomeric methyl- and ethylferrocenecarboxylic acids. Changes in the spectra of amides of isomeric phenylferrocenecarboxylic acids from one compound to another are more complex and require further investigations. "We thank L. S. Shilovtseva for providing the methylethyl - and ethylhydroxymethylferrocenes." Orig. art. has: 1 table.

ASSOCIATION: Institut elementoorganicheskikh soyedineniy Akademii nauk SSSR (Institute of Organometallic Compounds, Academy of Sciences, SSSR)

SUBMITTED: 29Jul64 ENCL: 00 SUB CODE: OC

NO REF SOV: 005 OTHER: 005

Card 2/2

APPROVED FOR RELEASE: 06/15/2000 CIA-RDP86-00513R001240020013-8"

"APPROVED FOR RELEASE: 06/15/2000 CIA-RDP86-00513R001240020013-8

USSR/Farm Animals - Horses

Abs Jour : Ref Zhur - Biol., No 15, 1958, 69262

Author : Perevalova, K.
Inst : -
Title : Interrelationship Between Time of Fetation and Composition of Mares' Colostrum and Milk

Orig Pub : Konevodstvo, 1957, No 12, 31-32

Abstract : Investigations showed that the colostrum and milk of mares with normal periods of fetation had a lower fat content (before suckling 0.55% and on the third month 2%), and a higher ash (1.21%) and Ca (0.35%) content as compared with mares with shortened time of fetation, which had 1.5 and 2.5 (0.96 and 0.23%, respectively.

Card 1/1

APPROVED FOR RELEASE: 06/15/2000 CIA-RDP86-00513R001240020013-8"

"APPROVED FOR RELEASE: 06/15/2000 CIA-RDP86-00513R001240020013-8

DOMARADSKIY, I.V.; KLIMOVA, I.M.; PEREVALOVA, L.G.

Effect of the plague microbe toxin on phosphorus metabolism in the liver. Vop. med. khim. 7 no.2:145-149 Mr-Ap '61. (MIRA 14:6)

1. The State Anit-Plague Research Institute of Siberia and the Far East, Irkutsk.
(PHOSPHORUS METABOLISM) (LIVER)
(TOXINS AND ANTITOXINS) (PASTEURELLA PESTIS)

APPROVED FOR RELEASE: 06/15/2000 CIA-RDP86-00513R001240020013-8"

"APPROVED FOR RELEASE: 06/15/2000 CIA-RDP86-00513R001240020013-8

SHERGINA, N.I.; PEREVALOVA, N.G.

Possibility of spectrophotometric analysis of the phenols C_6-C_8. Izv.Sib.otd. AN SSSR no.9:10-16 '58. (MIRA 11:11)

1. Vostochno-Sibirskiy filial AN SSSR.
(Phenols--Spectra)

APPROVED FOR RELEASE: 06/15/2000 CIA-RDP86-00513R001240020013-8"

"APPROVED FOR RELEASE: 06/15/2000 CIA-RDP86-00513R001240020013-8

ZAYDMAN, N.M.; SHERGINA, N.I.; PEREVALOVA, N.G.; KALECHITS, I.V.

Use of spectrophotometric methods for the analysis of lower phenols of semicoke tars. Trudy kom. anal. khim. 8:243-251 '58. (MIRA 11:8)

1.Vostochno-Sibirskiy filial Akademii nauk SSSR.
(Cresol--Spectra) (Phenol--Spectra)

APPROVED FOR RELEASE: 06/15/2000 CIA-RDP86-00513R001240020013-8"

"APPROVED FOR RELEASE: 06/15/2000 CIA-RDP86-00513R001240020013-8

FOLYANSKIY, B.A., prof.; PEREVALOVA, N.V., kand. med. nauk

Our experience in the treatment of craniocerebral injuries. Zav. med. 28 no.9:116-121 S '65. (MIRA 18:9)

1. Klinika obshchey khirurgii (zav. - prof. B.A.Folyanskiy) Novosibirskogo meditsinskogo instituta.

APPROVED FOR RELEASE: 06/15/2000 CIA-RDP86-00513R001240020013-8"

"APPROVED FOR RELEASE: 06/15/2000 CIA-RDP86-00513R001240020013-8

MAYEVSKIY, Aleksandr Yevgen'yevich; KORENOVSKIY, Grigoriy Grigor'yevich; E.EL'SON, Aleksandr Markovich; KLARK, G.S., kand. tekhn. nauk, nauchn. red.; [illegible], N.V., red.

[Anticorrosive protection of steel joints in large-panel construction] Antikorrozionnaia zashchita stal'nykh soedinenii v krupnopanel'nom stroitel'stve. Moskva, 1964. 171 p. (MIRA 17:11)

1. Otdel korrozii Instituta fizicheskoy khimii AN SSSR (for Klark).

APPROVED FOR RELEASE: 06/15/2000 CIA-RDP86-00513R001240020013-8"

"APPROVED FOR RELEASE: 06/15/2000 CIA-RDP86-00513R001240020013-8

ZHUCHIN, D.I.; KONSTANTINOV, S.V.; [illegible], G.L.; [illegible],
S.G.; KHARKHARDIN, I.S.; [illegible], M.A., inzh., nauchn. red.;
PEREVALNUK, P.T., red.

[Rural construction in the Virgin Territory] Sel'skoe
stroitel'stvo v TSelinnom krae. Moskva, Stroiizdat, [illegible].
(MIRA 17:9)
89 p.

APPROVED FOR RELEASE: 06/15/2000 CIA-RDP86-00513R001240020013-8"

"APPROVED FOR RELEASE: 06/15/2000 CIA-RDP86-00513R001240020013-8

KOLMAKOV, V.M., inzh.; BAKIYEV, Ch.B., inzh.; LINETSKIY, G.I., inzh.; POLYANSKIY, S.K., inzh.; LUYK, I.A., inzh.; ZHARDINOVSKIY, G.M., inzh.; PEREVALYUK, M.V., red.

[Album on the technical maintenance of the LAZ-690 motor crane] Al'bom tekhnicheskogo obsluzhivaniia avtokrana LAZ-690. Moskva, Stroiizdat, 1964. 110 p. (MIRA 17:6)

1. Moscow. Nauchno-issledovatel'skiy institut organizatsii i mekhanizatsii stroitel'nogo proizvodstva.

APPROVED FOR RELEASE: 06/15/2000 CIA-RDP86-00513R001240020013-8"

"APPROVED FOR RELEASE: 06/15/2000 CIA-RDP86-00513R001240020013-8

KOLMAKOV, V.M., inzh.; BALIYEV, Ch.B., inzh.; LINETSKIY, G.I., inzh.; POLYANSKIY, S.K., inzh.; LUYK, I.A., inzh.; ZHARDINOVSKIY, G.M., inzh.; PEREVALYUK, M.V., red.; BOROVNEV, N.K., tekhn. red.

[Album for the maintenance of the LAZ-690 motor crane] Al'bom tekhnicheskogo obsluzhivaniia avtokrana LAZ-690. Moskva, Stroiizdat, 1964. 110 p. (MIRA 17:3)

1. Akademiya budivnytstva i arkhitektury URSR. Institut organizatsii i mekhanizatsii stroitel'nogo proizvodstva.

APPROVED FOR RELEASE: 06/15/2000 CIA-RDP86-00513R001240020013-8"

"APPROVED FOR RELEASE: 06/15/2000 CIA-RDP86-00513R001240020013-8

FEYGIN, Leonid Aleksandrovich; STANKOVSKIY, A.P., inzh., nauchn. red.; PEREVALYUK, M.V., red.

[Operating construction equipment and increasing its efficiency] Ekspluatatsiia stroitel'nykh mashin i povyshenie ikh proizvoditel'nosti. Moskva, Stroiizdat, 1964. 206 p. (MIRA 17:6)

APPROVED FOR RELEASE: 06/15/2000 CIA-RDP86-00513R001240020013-8"

"APPROVED FOR RELEASE: 06/15/2000 CIA-RDP86-00513R001240020013-8

IPATOV, Petr Platonovich, inzh.; FINKEL', Abram Froymovich, inzh.; ZALENSKIY, V.S., inzh., nauchn. red.; PEREVALYUK, M.V., red.; SHEVCHENKO, T.N., tekhn. red.

[Rigging operations and hoisting and conveying machinery used in assembling] Takelazhnye raboty i montazhnye podemno-transportnye mekhanizmy. Moskva, Stroiizdat, 1964. 246 p. (MIRA 17:2)

APPROVED FOR RELEASE: 06/15/2000 CIA-RDP86-00513R001240020013-8"

"APPROVED FOR RELEASE: 06/15/2000 CIA-RDP86-00513R001240020013-8

ISPRAVNIKOVA, Antonina Grigor'yevna; PEREVALYUK, V.P., red.; CHUROVA, E.P., tekhn. red.

[Fire prevention measures in the production of plastics] Pozharnaia profilaktika pri proizvodstve plasticheskikh mass; uchebnoe posobie. Moskva, Vysshaia shkola MOOP RSFSR. Pt. 1. [Polyethylene] Polietilen. 1962. 30 p. (MIRA 16:6)
(Plastics industry—Fires and fire prevention)
(Polyethylene)

APPROVED FOR RELEASE: 06/15/2000 CIA-RDP86-00513R001240020013-8"

"APPROVED FOR RELEASE: 06/15/2000 CIA-RDP86-00513R001240020013-8

PEREVARIN, V.G.

Economy and saving campaign. Mashinostroitel' no.10:4-5 O '63. (MIRA 16:12)

1. Sekretar' partiynogo komiteta Krasnodarskogo zavoda elektroizmeritel'nykh priborov.

APPROVED FOR RELEASE: 06/15/2000 CIA-RDP86-00513R001240020013-8"

"APPROVED FOR RELEASE: 06/15/2000 CIA-RDP86-00513R001240020013-8

PEREVERDENTSEV, F.P.

Schools for working youth should be drawn nearer [illegible]. Energetik 8 no.2:36-37 F '60. (MIRA 13:[illegible])
(Technical education)

APPROVED FOR RELEASE: 06/15/2000 CIA-RDP86-00513R001240020013-8"

"APPROVED FOR RELEASE: 06/15/2000 CIA-RDP86-00513R001240020013-8

PEREVENZENTSEV, fnu

Acorns

Sowing acorns in autumn. Les. Khoz. [illegible]

Monthly List of Russian Accessions Library of Congress November 1952 UNCLASSIFIED

APPROVED FOR RELEASE: 06/15/2000 CIA-RDP86-00513R001240020013-8"

"APPROVED FOR RELEASE: 06/15/2000 CIA-RDP86-00513R001240020013-8

TKHORZHEVSKIY, Vladislav Pavlovich; PEREVEZENTSEV, Ivan Gavrilovich; KUZIN, M.D., retsenzent; KHLEPETIN, Yu.M., red.; DUGINA, N.A., tekhn.red.

[Manufacture of instruments for tropical countries] Konstruirovanie priborov dlia stran s tropicheskim klimatom. Moskva, Gos. nauchno-tekhn.izd-vo mashinostroit.lit-ry, 1960. 153 p. (MIRA 13:10)

(Instrument manufacture)

APPROVED FOR RELEASE: 06/15/2000 CIA-RDP86-00513R001240020013-8"

"APPROVED FOR RELEASE: 06/15/2000 CIA-RDP86-00513R001240020013-8

PEREVERZENTSEV, V. (Novosibirsk)

Utilizing labor resources in Siberia and the Far East. Vop. ekon. no.12:149-152 D '60. (MIRA 13:12)

(Siberia--Manpower)
(Soviet Far East--Manpower)

APPROVED FOR RELEASE: 06/15/2000 CIA-RDP86-00513R001240020013-8"

"APPROVED FOR RELEASE: 06/15/2000 CIA-RDP86-00513R001240020013-8

PEREVEDENTSEV, V. (Novosibirsk)

Problems of territorial redistribution of labor resources. Vop. ekon. no.5:48-56 My '62. (MIRA 15:6)
(Siberia--Labor supply)

APPROVED FOR RELEASE: 06/15/2000 CIA-RDP86-00513R001240020013-8"

"APPROVED FOR RELEASE: 06/15/2000 CIA-RDP86-00513R001240020013-8

FOMIN, V. (Novosibirsk); PEREVEDENTSEV, V. (Novosibirsk)

New development in coordinating research in the economics of eastern regions. Vop. ekon. no.9:153-156 S '63. (MIRA 16:9)
(Siberia--Economic research)
(Soviet Far East--Economic research)

APPROVED FOR RELEASE: 06/15/2000 CIA-RDP86-00513R001240020013-8"

"APPROVED FOR RELEASE: 06/15/2000 CIA-RDP86-00513R001240020013-8

PEREVEDENTSEV, V.I.

Influence of ethnic factors on the territorial redistribution of population. Izv. AN SSSR. Ser. geog. no.4:31-39 Jl-Ag '65. (MIRA 18:8)

1. Institut ekonomiko-matematicheskikh issledovaniy Sibirskogo otdeleniya AN SSSR.

APPROVED FOR RELEASE: 06/15/2000 CIA-RDP86-00513R001240020013-8"

"APPROVED FOR RELEASE: 06/15/2000 CIA-RDP86-00513R001240020013-8

PEREVEDENTSEV, V.V.

Investment casting of thin walled large-size castings from aluminum alloys. Lit. proizv. no.9:41-42 S '64. (MIRA 18:10)

APPROVED FOR RELEASE: 06/15/2000 CIA-RDP86-00513R001240020013-8"

"APPROVED FOR RELEASE: 06/15/2000 CIA-RDP86-00513R001240020013-8

L 40277-66 EWT(1)/FCC GW

ACC NR: AR6014567 SOURCE CODE: UR/0169/65/000/011/B048/B048

AUTHOR: Perevedentsev, Yu.

TITLE: Experiment in calculating the perturbation of gravitational fields in the free atmosphere

SOURCE: Ref. zh. Geofizika, Abs. 11B333

REF SOURCE: Sb. aspirantsk. rabot. Kazansk. un-t. Yestostv. n. Kazan', 1965, 174-180

TOPIC TAGS: gravitation field, free atmosphere, centrifugal force, earth gravity, geostrophic wind, vector, perturbation

ABSTRACT: It is known that the force of gravity is the vector difference between the force of Newtonian gravity and the centrifugal force of the earth's rotation. The distribution of the gravitational field of the atmosphere is therefore a function of the wind field. The author calculates the gravity perturbations in the atmosphere, using a certain known geostrophic wind distribution. The magnitude of the perturbations is very changeable in space and time and can reach several hundreds of mgal. I. K. [Translation of abstract]

SUB CODE: 04

UDC: 551.511.3

Card 1/1 mlp

APPROVED FOR RELEASE: 06/15/2000 CIA-RDP86-00513R001240020013-8"

"APPROVED FOR RELEASE: 06/15/2000 CIA-RDP86-00513R001240020013-8

L 12988-66 EWT(1) GW

ACC NR: AR6000802 SOURCE CODE: UR/0169/65/000/009/B032/B033

33

B

SOURCE: Ref. zh. Geofizika, Abs. 9B253

44,55

AUTHOR: Perevedentsev, Yu. P.

TITLE: Evaluating the components of the centrifugal term in the formula for the force of gravity in a free atmosphere

44,55

12,44,55

CITED SOURCE: Sb. Vopr. geogr. Sredn. Povolzh'ya. Kazan', Kazansk. un-t, 1964, 90-92

TOPIC TAGS: earth gravity, atmospheric movement, gravimetric analysis

TRANSLATION: The author gives an expression for acceleration due to the force of gravity g in the form:

$$g=k\frac{M}{R^2}-(\omega\pm\omega')^2R\cos^2\varphi=k\frac{M}{R^2}-(\omega^2\pm2\omega\omega'+\omega'^2)R\cos^2\varphi,$$

where ω' is the angular velocity of the natural rotation of the atmosphere and ϕ is latitude. It is ordinarily assumed in calculating g that $\omega'=0$. Actually the part played by the member $2\omega\omega'R\cos\phi$ at high latitudes is fully comparable to the term

UDC: 551.511.3

Card 1/2

2

APPROVED FOR RELEASE: 06/15/2000 CIA-RDP86-00513R001240020013-8"

"APPROVED FOR RELEASE: 06/15/2000 CIA-RDP86-00513R001240020013-8

L 12988-66

ACC NR: AR6000802

$\omega^2 R\cos^2\phi$. The natural rotation of the atmosphere with respect to the solid surface of the earth should be taken into account in gravimetric atmospheric studies.

SUB CODE: 08

Card 2/2 HW

APPROVED FOR RELEASE: 06/15/2000 CIA-RDP86-00513R001240020013-8"

"APPROVED FOR RELEASE: 06/15/2000 CIA-RDP86-00513R001240020013-8

YURKEVICH, Iosif Andreyevich. Prinimali uchastiye: FEDOROV, S.F.; VINOGRADOV, V.L., nauchnyy sotrudnik; KOZYREVA, N.A., nauchnyy sotrudnik; PEREVEDENTSEVA, M.I., nauchnyy sotrudnik; FEYRABENT, V.A., nauchnyy sotrudnik. MIRONOV, S.I., akademik, otv.red.; SHOBOLOV, S.P., red. izd-va; GUSEVA, A.P., tekhn.red.

[Facies and geochemical characteristics of Meso-Cenozoic deposits of the eastern part of Western Siberia] Fatsial'no-geokhimicheskaia kharakteristika mezo-kainozoiskikh otlozhenii Vostochnogo Zaural'ia. Moskva, Izd-vo Akad.nauk SSSR, 1959. 114 p. (MIRA 12:4)

1. Rukovoditel' Vostochnoy kompleksnoy nefte-gazovoy ekspeditsii AN SSSR (for Fedorov). 2. Chlen-korrespondent AN SSSR (for Fedorov). 3. Laboratoriya genezisa nefti (for Mironov, Vinogradov, Kozyreva, Perevedentseva, Feyrabent).
(Siberia, Western--Geology, Stratigraphic)

APPROVED FOR RELEASE: 06/15/2000 CIA-RDP86-00513R001240020013-8"

"APPROVED FOR RELEASE: 06/15/2000 CIA-RDP86-00513R001240020013-8

BUYANOVSKIY, Lev Arkad'yevich; PEREVERSEV, V.V., ved. red.;
YAKOVLEVA, Z.I., tekhn. red.

[Principles of planning the complete automation of oil and gas production and transportation]Printsipy proektirovaniia kompleksnoi avtomatizatsii dobychi i transporta nefti i gaza. Moskva, Gostoptekhizdat, 1963. 114 p. (MIRA 16:4)
(Automation)
(Oil fields--Production methods)
(Petroleum--Transportation)

APPROVED FOR RELEASE: 06/15/2000 CIA-RDP86-00513R001240020013-8"

"APPROVED FOR RELEASE: 06/15/2000 CIA-RDP86-00513R001240020013-8

ACCESSION NR: AP4036562 S/0139/64/000/002/0077/0083

AUTHORS: Perevertayev, V. D.; Motsik, M. S.

TITLE: Adsorption kinetics of films on freshly cut mica crystal surfaces and their electrical conductivities. 1

SOURCE: IVUZ. Fizika, no. 2, 1964, 77-83

TOPIC TAGS: adsorption kinetics, mica crystal, light polarization, phase shift, reflected light, adsorbed layer, refractive index

ABSTRACT: The light polarization method was used to measure the thickness h of very thin films on freshly cut mica crystal surfaces. The method consists of measuring the relative phase shifts δ and relative decrease in amplitude $\rho_{\parallel}/\rho_{\perp}$ of light reflected from the adsorbed layer given by

$$h = \frac{1}{\frac{c^{\parallel}}{a^{\parallel}+b^{\parallel}} + \frac{c^{\perp}}{a^{\perp}+b^{\perp}}} \cdot \frac{\lambda}{4\pi n_2 \cos\beta} \cdot \delta,$$

where a, b, and c are functions of Fresnel coefficients on air-film and film-mica surfaces, λ is wavelength, n_2 is film refractive index, β is angle of incidence

Card 1/3

APPROVED FOR RELEASE: 06/15/2000 CIA-RDP86-00513R001240020013-8"

"APPROVED FOR RELEASE: 06/15/2000 CIA-RDP86-00513R001240020013-8

ACCESSION NR: AP4036562

on mica surface. The block schematic of the experimental set up is given in Fig. 1 on the Enclosure. Analysis showed δ to be strongly dependent on angle of incidence i_b. For maximum sensitivity i_b was selected as $57^{\circ}40'$. Various film thicknesses were obtained by controlling the humidity over the mica specimen inside an evacuated bell jar. The results showed a rise in film thickness to a maximum within 4 minutes after splitting the crystal. This was followed by a gradual decrease to an approximate equilibrium value at about 20 minutes. Thicknesses as small as 200 Å could be measured by this method. Orig. art. has: 13 formulas, 7 figures, and 1 table.

ASSOCIATION: Irkutskiy gosuniversitet imeni A. A. Zhdanova (Irkutsk State University)

SUBMITTED: 06Oct62 DATE ACQ: 05Jun64 ENCL: 01

SUB CODE: OP NO REF SOV: 010 OTHER: 002

Card 2/3

APPROVED FOR RELEASE: 06/15/2000 CIA-RDP86-00513R001240020013-8"

"APPROVED FOR RELEASE: 06/15/2000 CIA-RDP86-00513R001240020013-8

ACCESSION NR: AP4036562 ENCLOSURE: 01

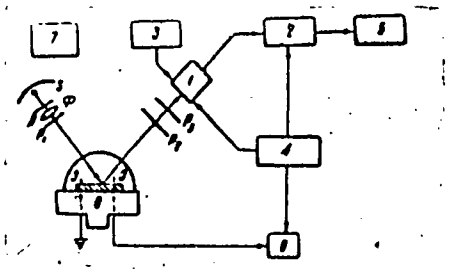

Fig. 1. S- quartz lamp PRK-4; L- lens, O- specimen; P_1- right angle polarization prism, P_2- quarter wave length plate, P_3- right angle polarization prism-analyzer; 1- FEU-29; 2- narrow-band amplifier; 3- generator 3G-10; 4- source power supply; 5- automatic recorder; 6- constant current amplifier; 7- stabilizer.

Card 3/3

APPROVED FOR RELEASE: 06/15/2000 CIA-RDP86-00513R001240020013-8"

"APPROVED FOR RELEASE: 06/15/2000 CIA-RDP86-00513R001240020013-8

L 34056-66 EWT(1)/EWT(m)/T IJP(c) GG

ACC NR: AP6025522 SOURCE CODE: UR/0069/66/028/002/0254/0257

AUTHOR: Perovertayev, V. D.; Metsik, M. S.

ORG: Irkutsk University im. A. Zhdanov (Irkutskiy gosuniversitet)

TITLE: Adsorption of water vapor on mica crystal surfaces

SOURCE: Kolloidnyy zhurnal, v. 28, no. 2, 1966, 254-257

TOPIC TAGS: adsorption, water vapor, crystal surface, mica, bond energy

ABSTRACT: The adsorption of water vapor on surfaces of a fresh crystal fracture was studied. Adsorption isotherms were experimentally obtained for water vapor on mica crystal surfaces at 21 and 30° C. The bond energy of water molecules decreases with increase in thickness of the adsorbed layer, and for sufficiently thick films the bond energy exceeds the energy of evaporation of water molecules from the liquid surface by approximately 50%. The heat of adsorption of water vapor on the surfaces of mica crystals was determined. In the interval p/p_s from 0 to about 0.6, despite the stratification of the sorbed layer, a linear relationship was found to hold between the thickness and p/p_s, which corresponds to the initial segment of the Langmuir adsorption isotherm. Further along the isotherm, the curve rises more or less steeply, pointing to a decrease in bond energy of water molecules

Card 1/2 UDC: 541.183.25

APPROVED FOR RELEASE: 06/15/2000 CIA-RDP86-00513R001240020013-8"

"APPROVED FOR RELEASE: 06/15/2000 CIA-RDP86-00513R001240020013-8

L 34056-66

ACC NR: AP6025522

with increase in thickness of adsorption layer on the crystal surface. The bond energy of water molecules on muscovite surfaces was found to be approximately $1.2 \cdot 10^{-12}$ erg. Orig. art. has: 5 figures, 4 formulas and 1 table. [JPRS: 35,998]

SUB CODE: 07,20/ SUBM DATE: 02Oct64/ ORIG REF: 009

Card 2/2

APPROVED FOR RELEASE: 06/15/2000 CIA-RDP86-00513R001240020013-8"

"APPROVED FOR RELEASE: 06/15/2000 CIA-RDP86-00513R001240020013-8

L 14047-66 EWT(1)/EWA(h)

ACC NR: AR5020043 SOURCE CODE: UR/0081/65/000/012/D044/D045

AUTHOR: Perevertayev, V.D.; Metsik, M.S.; Kupriyanov, V.M.

ORG: none

TITLE: Photoelectronic device for studying variations in the thickness of an adsorption film and the surface electroconductivity of fresh mica crystal chips

SOURCE: Ref. zh. Khimiya, Abs. 12D53

REF SOURCE: Sb. Kratkiye soobshch. o nauchno-issled. rabotakh za 1961 g. Irkutskiy un-t. Irkutsk, 1963, 47-49

TOPIC TAGS: mica, photoelectric detection equipment, electric conductance

TRANSLATION: A description is given of a photoelectronic device for the study of variations in the thickness of an adsorption film and of the surface electroconductivity of fresh mica crystal chips; this device eliminates the shortcoming of devices previously used. The crystal is placed in a carefully isolated vacuum chamber. The chipping of the crystal and the application of Ag-electrodes are done automatically. The concentration of H_2O steam in the chamber is done by evaporating frozen H_2O in liquid N_2. A continuous change in temperature is achieved by special thermostats. The variations in the intensity of the light flow is registered by FEU-29. The signal is amplified and upon detection it is transferred to the C-191 loop oscillograph. The data is recorded on a moving photofilm. I. Zimakov.

SUB CODE: 09, 20

BVK

Card 1/1

APPROVED FOR RELEASE: 06/15/2000 CIA-RDP86-00513R001240020013-8"

"APPROVED FOR RELEASE: 06/15/2000 CIA-RDP86-00513R001240020013-8

PEREVERTAYEV, V.D.; KURPIYANOV, V.M.; METSIK, M.S.

Photoelectronic apparatus for measuring the thickness of thin films. Prib. i tekh. eksp. 8 no.3:193-195 My-Je '63. (MIRA 16:9)

1. Irkutskiy gosudarstvennyy universitet.
(Electronic apparatus and appliances)

APPROVED FOR RELEASE: 06/15/2000 CIA-RDP86-00513R001240020013-8"

"APPROVED FOR RELEASE: 06/15/2000 CIA-RDP86-00513R001240020013-8

L 13325-63 EWT(1)/BDS AFFTC/ASD GG/IJP(C) BR

ACCESSION NR: AP3002752 S/0120/63/000/003/0193/1095

AUTHOR: Perevertayev, V. D.; Kupriyanov, V. M.; Mitsik, M. S. 57

TITLE: Photoelectronic thickness gage for thin films

SOURCE: Pribory* i tekhnika eksperimenta, no. 3, 1963, 193-195

TOPIC TAGS: thickness gage

ABSTRACT: A film-thickness measuring instrument is described which is based on polarization of light reflected by a film-coated body. Variation in thickness of 12-300-Angstrom films can be measured; also some other measurements, such as surface electric conductivity can be made. A provision for N370M recording instrument is made. The process must last 2 sec or more in order to be measured. A block diagram and electrical schematics are presented. Orig. art. has: 4 figures.

ASSOCIATION: Irkut*skiy gosudarstvenny*y universitet (Irkutsk State University)

SUBMITTED: 01Jul62 DATE ACQ: 12Jul63 ENCL: 00

SUB CODE: PH, IE NO REF SOV: 007 OTHER: 001

Card 1/1

APPROVED FOR RELEASE: 06/15/2000 CIA-RDP86-00513R001240020013-8"

"APPROVED FOR RELEASE: 06/15/2000 CIA-RDP86-00513R001240020013-8

TIKHONENKO, T.I.; PEREVERTAYLO, G.A.; DOBROV, Ye.N.; KISELEV, F.L.

Mechanism of the thermal denaturation of deoxyribonucleic acid. Dokl. AN SSSR 151 no.1:237-240 Jl '63. (MIRA 16:9)

1. Institut virusologii AMN SSSR. Predstavleno akademikom A.N.Belozerskim.

(Nucleic acids)

APPROVED FOR RELEASE: 06/15/2000 CIA-RDP86-00513R001240020013-8"

"APPROVED FOR RELEASE: 06/15/2000 CIA-RDP86-00513R001240020013-8

SUPRUN, O.; PEREVERTAYLO, .

Workers become designers. Mashinostroitel' no.9:3 S '62.
(MIRA 15:9)

(Kharkov--Machine-tool industry)

APPROVED FOR RELEASE: 06/15/2000 CIA-RDP86-00513R001240020013-8"

"APPROVED FOR RELEASE: 06/15/2000 CIA-RDP86-00513R001240020013-8

PEREVERTAYLO, P.I.

Machining spiral spur gears with closed rims. Stan.i instr. 33 no.11:28-31 N '62. (MIRA 15:11)

(Gear cutting)

APPROVED FOR RELEASE: 06/15/2000 CIA-RDP86-00513R001240020013-8"

"APPROVED FOR RELEASE: 06/15/2000 CIA-RDP86-00513R001240020013-8

AID P - 5347

Subject : USSR/Engineering

Card 1/1 Pub. 103 - 2/25

Author : Perevertaylo, P. I.

Title : The 5V12 vertical gear shaper

Periodical : Stan. i instr., 8, 5-7, Ag 1956

Abstract : The 5V12 vertical gear shaper designed for cutting external and internal gearing in spur wheels up to 200mm in diameter is described and illustrated. The 5V12 machine now replaces the 5A12 shaper. Four drawings and 1 photo.

Institution : None

Submitted : No date

APPROVED FOR RELEASE: 06/15/2000 CIA-RDP86-00513R001240020013-8"

"APPROVED FOR RELEASE: 06/15/2000 CIA-RDP86-00513R001240020013-8

PEREVERTAYLO, P.I.

The 5V12 gear shaper. Stan. i instr. 27 no.8:5-7 Ap '56.
(Gear-cutting machines) (MLRA 9:9)

APPROVED FOR RELEASE: 06/15/2000 CIA-RDP86-00513R001240020013-8"

"APPROVED FOR RELEASE: 06/15/2000 CIA-RDP86-00513R001240020013-8

PEREVERTAYLO, P. I.

Gear-Cutting Machines

Rapid gear cutting machine, model 5107, Stan. i inst. 23 No. 3, 1952.

Monthly List of Russian Accessions, Library of Congress, July 1952. Unclassified.

APPROVED FOR RELEASE: 06/15/2000 CIA-RDP86-00513R001240020013-8"

"APPROVED FOR RELEASE: 06/15/2000 CIA-RDP86-00513R001240020013-8

PEREVERTAYLO, P.I.

Modern methods for machining spur gears. Stan.i instr. 33 no.1:22-23 Ja '62. (MIRA 15:2)

(Gear cutting)

APPROVED FOR RELEASE: 06/15/2000 CIA-RDP86-00513R001240020013-8"

"APPROVED FOR RELEASE: 06/15/2000 CIA-RDP86-00513R001240020013-8

PEREVERTAYLO , P.I.

Machining closed internal toothings. Stan.i instr. 33 no.3:15-16 Mr '62. (MIRA 15:2)

(Gear cutting)

APPROVED FOR RELEASE: 06/15/2000 CIA-RDP86-00513R001240020013-8"

"APPROVED FOR RELEASE: 06/15/2000 CIA-RDP86-00513R001240020013-8

BURAKOV, M.V.; Primimali uchastiye: IL'IN, A.I.; PEREVERTAYLO, V.F. SINITS, M.A., red.; LYUBIMOVA, T.M., red.; SVESHNIKOV, A.A., tekhn.red.

[Practice in operating the "Ural" digital computing machine] Opyt ekspluatatsii tsifrovoi vychislitel'noi mashiny "Ural." Pod red. M.A.Sinitsa. Moskva, Izd-vo "Sovetskoe radio," 1962. 183 p. (MIRA 15:5)
(Electronic digital computers)

APPROVED FOR RELEASE: 06/15/2000 CIA-RDP86-00513R001240020013-8"

"APPROVED FOR RELEASE: 06/15/2000 CIA-RDP86-00513R001240020013-8

DANILENKO, V., inzh.; PEREVERTEN', V.

Use of corrections in the determination of a ship's draft. Mor. flot 22 no.8:20-21 Ag '62. (MIRA 15:7)

1. Transportno-ekspeditsionnaya kontora porta Nakhodka (for Danilenko). 2. Nachal'nik transportno-ekspeditsionnoy kontory porta Nakhodka (for Pereverten').
(Load line)

APPROVED FOR RELEASE: 06/15/2000 CIA-RDP86-00513R001240020013-8"

"APPROVED FOR RELEASE: 06/15/2000 CIA-RDP86-00513R001240020013-8

PEREVERTKIN, I.I.

Instrument for checking the insulation of batteries and wiring. Avtom., telem. i sviaz' 2 no.6:36-37 Je '58. (MIRA 11:6)

1. Starshiy elektromekhanik Likhovskoy distantsii signalizatsii i svyazi Yugo-Vostochnoy dorogi.
(Electric batteries)

APPROVED FOR RELEASE: 06/15/2000 CIA-RDP86-00513R001240020013-8"

"APPROVED FOR RELEASE: 06/15/2000 CIA-RDP86-00513R001240020013-8

PEREVERTKIN, S., general-polkovnik, Geroy Sovetskogo Soyuza

The last blow. Voen. vest. 41 no.5:15-19 My '61. (MIRA 14:8)
(Berlin, Battle of, 1945)

APPROVED FOR RELEASE: 06/15/2000 CIA-RDP86-00513R001240020013-8"

"APPROVED FOR RELEASE: 06/15/2000 CIA-RDP86-00513R001240020013-8

PEREVERTKIN, S.M.; KHRAPOVITSKIY, Yu.S., kand.tekhn.nauk; TSIKLIS, D.S., doktor khim.nauk

Compressibility of some liquids at high pressures. Trudy GIAP no.7:26-32 '57. (MIRA 12:9)
(Liquids) (Compressibility)

APPROVED FOR RELEASE: 06/15/2000 CIA-RDP86-00513R001240020013-8"

"APPROVED FOR RELEASE: 06/15/2000 CIA-RDP86-00513R001240020013-8

KIRIL'CHENKO, K.; PEREVERTKIN, V.

Leading territory in the construction of public health institutions. Sel'. stroi. 16 no.6:11 Je '61. (MIRA 14:7)

1. Nachal'nik upravleniya stroitel'stva Krasnodarskogo kraysel'khozupravleniya (for Kiril'chenko). 2. Glavnyy inzh. Krasnodarskogo krayevogo otdela Zdravookhraneniya (for Perevertkin).
(Krasnodar Territory) (Public health, Rural)

APPROVED FOR RELEASE: 06/15/2000 CIA-RDP86-00513R001240020013-8"

"APPROVED FOR RELEASE: 06/15/2000 CIA-RDP86-00513R001240020013-8

KOZYREV, A.; TRET'YAKOVA, L.; PEREVERTUN, A.I.

Improving the method of metallometric analysis for mercury. Sbor. nauch. trud. Kaz GMI no.19:199-201 '60. (MIRA 15:3)
(Mercury)

APPROVED FOR RELEASE: 06/15/2000 CIA-RDP86-00513R001240020013-8"

"APPROVED FOR RELEASE: 06/15/2000 CIA-RDP86-00513R001240020013-8

65972

SOV/58-59-4-9502

24 3200

Translation from: Referativnyy Zhurnal Fizika, 1959, Nr 4, p 309 (USSR)

AUTHOR: Perevertun, A.I.

TITLE: On the Polarization of Light in an Extra-Wide-Angle Camera 20

PERIODICAL: Sb. nauchn. tr. Kazakhsk. gorno-metallurg. in-ta, 1957, Nr 15, pp 181 - 183

ABSTRACT: Under laboratory conditions simulating the firmament the author investigated the effect of the polarization of light on the results of photometrization when photographing the sky. It is shown that the misrepresentation of the true brightness on account of the polarization of the light attains no more than 5% at the maximum point, i.e., does not exceed the error of the photographic method, and that the distortions introduced by polarization into the results of the photometric processing of the negatives lie beyond the accuracy of the method.

L.A. Ventman

Card 1/1

APPROVED FOR RELEASE: 06/15/2000 CIA-RDP86-00513R001240020013-8"

"APPROVED FOR RELEASE: 06/15/2000 CIA-RDP86-00513R001240020013-8

PEREVERTUN, A. I., Candidate Phys-Math Sci (diss) -- "Investigation of the clarity of a cloudless sky and of the transparency of the earth's atmosphere in the photographic portion of the spectrum". Moscow, 1959. 16 pp (Min Higher Educ, Moscow State U im M. V. Lomonosov, Phys Faculty), 200 copies (KL, No 24, 1959, 126)

APPROVED FOR RELEASE: 06/15/2000 CIA-RDP86-00513R001240020013-8"

"APPROVED FOR RELEASE: 06/15/2000 CIA-RDP86-00513R001240020013-8

L 46008-66 EWT(1) GW

ACC NR: AR6029446 SOURCE CODE: UR/0169/66/000/005/B020/B020

AUTHOR: Gul'nitskiy, L. V.; Perevertun, A. I.

TITLE: Development of absolute methods of measuring radiation intensity

SOURCE: Ref. zh. Geofizika, Abs. 5B136

REF SOURCE: Tr. Kazakhsk. politekhn. in-ta, sb. 25, 1965, 23-44

TOPIC TAGS: actinometric measurement, radiation, radiation measurement, actinometer receiver, actinometer design

ABSTRACT: The theoretical principles underlying absolute radiation measurement methods developed by the Alma-Ata actinometric group are discussed. A differential equation for the heat process in an irradiated actinometric receiver, and its solution by the author, are given. Methods of measuring radiation when the receiver is a) stationary, and b) nonstationary are discussed. These methods are: a) the compensation heating method, the compensation method, the dual stationary and stationary-pulsed heating method, the differential heating method; b) the dual nonstationary heating method, the nonstationary-pulsed heating method, the pulsed-

Card 1/2 UDC: 551.508.2

APPROVED FOR RELEASE: 06/15/2000 CIA-RDP86-00513R001240020013-8"

"APPROVED FOR RELEASE: 06/15/2000 CIA-RDP86-00513R001240020013-8

L 46008-66
ACC NR: AR6029446

compensation heating method, and the dual pulsed heating method. Mixed methods of radiation measurement under stationary and nonstationary conditions are also discussed. These are the pulsed compensation and pulsed-compensation heating methods. The edge effect is taken into account. Specific actinometric designs based on the above mentioned methods are enumerated. Bibliography of 8 titles. V. Golikov. [Translation of abstract] [SP]

SUB CODE: 04/

Card 2/2 /MT

APPROVED FOR RELEASE: 06/15/2000 CIA-RDP86-00513R001240020013-8"

"APPROVED FOR RELEASE: 06/15/2000 CIA-RDP86-00513R001240020013-8

PEREVERTUN, G.P.

Two cases of primary cancer of the vagina during pregnancy. Uch.zap. KRROI 7:77-79'61. (MIRA 16:8)
(VAGINA—CANCER) (PREGNANCY, COMPLICATIONS OF)

APPROVED FOR RELEASE: 06/15/2000 CIA-RDP86-00513R001240020013-8"

"APPROVED FOR RELEASE: 06/15/2000 CIA-RDP86-00513R001240020013-8

PEREVERTUN, G.P.

"Concerning the Problem of the Treatment of a Primary Vaginal Cancer with Radioactive Cobalt" p. 250, in the book Experience in the Use of Radioactive Isotopes in Medicine R. Ye. KAVETSKIY and I.T. SHEVCHENKO, publishing House of the UKRAINIAN SSR, KIEV 1955, represents medical transactions of a conference held in KIEV from 18-20 January 1954.

So. 1100235

APPROVED FOR RELEASE: 06/15/2000 CIA-RDP86-00513R001240020013-8"

"APPROVED FOR RELEASE: 06/15/2000 CIA-RDP86-00513R001240020013-8

PEREVERTUN, N.P.

3(1) PHASE I BOOK EXPLOITATION SOV/1836

Akademiya nauk Kazakhskoy SSR. Sektor astrobotaniki

Trudy, t. 5 (Transactions of the Astrobotanical Sector, Kazakh SSR. Academy of Sciences, Vol 5) Alma-Ata, Izd-vo AN Kazakhskoy SSR, 1957. 1,100 copies printed.

Eds.: L.S. Rzhondkovskaya and D.N. Glazyrina; Tech. Ed.: Z.P. Rorokina; Editorial Board: Sh.P. Darchiya, K.I. Kozlova (Secretary), N.I. Suvorov (Deputy Resp. Ed.), and G.A. Tikhov (Resp. Ed.).

PURPOSE: This book is intended for scientists engaged in the fields of astrobotany and astronomy.

COVERAGE: The book comprises 20 articles which deal primarily with spectrophotometry as a means for determining the absorption of light by plants. It also contains a short review of the foreign publications on astrobotany which, according to the publisher, has already grown into the more extensive domain of astrobiology. Photos and charts accompany each article. No personalities are mentioned. Bibliography follows each article.

Card 1/4

Study of Planets 118

Darchiya, Sh.P. Comparing Spectral Brightness of Certain Plants in East Pamir and Batumi 126

Perevertun, N.P. The Spectral - Reflecting Property of Certain Type of Plants Within the Range of 650-1200 mμ 134

Stanko, S.A. Study of the Anthocyan Pigments in Monochromatic Rays 149

Stanko, S.A. Relationship Between the Solar Energy Passed Through Plant Leaves and the Color of the Flowers of These Plants 162

Darchiya, Sh.P., A.Kh. Kurmayeva, and V.G. Klinger. Comparing the Spectral Brightness of Live and Torn-Off Plant Leaves 174

Card 3/4

APPROVED FOR RELEASE: 06/15/2000 CIA-RDP86-00513R001240020013-8"

"APPROVED FOR RELEASE: 06/15/2000 CIA-RDP86-00513R001240020013-8

PEREVERTUN, M.P.

Preliminary results of visual observations of Mars in 1956.
Trudy Sekt.astrobot.AN Kazakh SSR 7:47-53 '59.
(MIRA 13:5)

(Mars(Planet))

APPROVED FOR RELEASE: 06/15/2000 CIA-RDP86-00513R001240020013-8"

"APPROVED FOR RELEASE: 06/15/2000 CIA-RDP86-00513R001240020013-8

PEREVERTUN, M.P.

New possibilities for the twilight method in determining the temperature of the stratosphere and ionosphere. Trudy Sekt. astrobot.AN Kazak SSR 7:200-206 '59. (MIRA 13:5)
(Atmospheric temperature)

APPROVED FOR RELEASE: 06/15/2000 CIA-RDP86-00513R001240020013-8"

"APPROVED FOR RELEASE: 06/15/2000 CIA-RDP86-00513R001240020013-8

33624
S/035/62/000/001/015/038
A001/A101

3,1550 (1041, 1057)

AUTHOR: Perevertun, M.P.

TITLE: Visual observations of Mars in 1958

PERIODICAL: Referativnyy zhurnal. Astronomiya i Geodeziya, no. 1, 1962, 67, abstract 1A509 ("Tr. Sektora astrobotan. AN KazSSR", 1960, v. 8, 117 - 120)

TEXT: Visual observations of Mars were conducted at Alma-Ata from October 1, 1958, to December 5, 1959, with an A3T -7 (AZT-7) reflector and using the red, yellow, green, pale blue, blue and color-contrast filters and without a filter, magnification being 270 and 400 diameters. Altogether 110 drawings of Mars were made, and atmospheric and optical phenomena observed were recorded in detail. The brightness of individual details was visually estimated on the basis of a 10-point sight scale. With the purpose of an objective estimate of green and blue coloring of individual seas and polar caps, a simple design of visual photometer was developed, the main part of which is the Lummer-Brodhoun cube, and filters are changed by means of a disk with an automatic fixing device. Observations carried out with this instrument led to the conclusion that Solis Lacus is

Card 1/2

APPROVED FOR RELEASE: 06/15/2000 CIA-RDP86-00513R001240020013-8"

"APPROVED FOR RELEASE: 06/15/2000 CIA-RDP86-00513R001240020013-8

33624
S/035/62/000/001/015/038
A001/A101

Visual observations of Mars in 1958

of dark-yellow color, Mare Sirenum - of violet, and Mare Cimmerium - of yellow color. The brightness of the southern polar cap is the highest when observed through the green and yellow filters, it is not detectable through the red filter. The color of the northern polar cap without a filter is noted as light pale blue, its brightness was the highest in green, yellow, and seldom in blue rays. Since the middle of November, a dense haze has appeared on Mars, which covered both polar regions. A contrast of dark regions with continents is lesser in visual, and particular in green rays, than in red rays. In green rays the central part of the "seas" is darker than their periphery, and in yellow rays the central part is brighter than the limb. It is noted that Syrtis Major and Solis Lacus have a mosaic structure. A bright spot in the north pole region was noticed, exceeding in brightness the region of the polar cap proper.

I. Lebedeva

[Abstracter's note: Complete translation]

Card 2/2

APPROVED FOR RELEASE: 06/15/2000 CIA-RDP86-00513R001240020013-8"

"APPROVED FOR RELEASE: 06/15/2000 CIA-RDP86-00513R001240020013-8

30615

S/058/61/000/008/022/044
A058/A101

27.1000

AUTHOR: Perevertun, M. P.

TITLE: Spectral sensitivity of the eye in the case of different brightness levels of the field of vision

PERIODICAL: Referativnyy zhurnal, Fizika, no. 8, 1961, 179-180, abstract 80223 ("Tr. Sektora astrobotan." AS KazSSR, no. 7, 1959, 54-63)

TEXT: The dependence of the spectral sensitivity of the eye on the state of its adaptation was investigated. The following is shown: 1) the maximum of the eye spectral sensitivity curve is shifted 9 - 10 mμ in the range 5 - 50 asb and 2 mμ in the range of high brightnesses 300 - 3,000 asb; 2) the eye spectral sensitivity depends on pre-exposure adaptation and the brightness level of the extraneous light acting on the peripheral part of the retina; 3) the steepness of the visibility curve depends substantially on the color adaptation of the eye.

A. Luizov

[Abstracter's note: Complete translation]

Card 1/1

APPROVED FOR RELEASE: 06/15/2000 CIA-RDP86-00513R001240020013-8"

"APPROVED FOR RELEASE: 06/15/2000 CIA-RDP86-00513R001240020013-8

PEREVERTUN, M.P.

Optical properties of some plant species in the infrared region of the spectrum studied by the use of penetrating rays. Trudy Sekt. astrobot. AN Kazakh. SSR 8:59-64 '60. (MIRA 13:12)
(Plants--Optical properties) (Spectrum, Infrared)

APPROVED FOR RELEASE: 06/15/2000 CIA-RDP86-00513R001240020013-8"

"APPROVED FOR RELEASE: 06/15/2000 CIA-RDP86-00513R001240020013-8

PEREVERTUN, M.P.

Visual observations of Mars in 1958. Trudy Sekt. astrobot. AN Kazakh. SSR 8:117-120 '60. (MIRA 13:12)
(Mars (Planet))

APPROVED FOR RELEASE: 06/15/2000 CIA-RDP86-00513R001240020013-8"

"APPROVED FOR RELEASE: 06/15/2000 CIA-RDP86-00513R001240020013-8

PEREVERTUN, M.P.

Magnitude of secondary scattering of light during the twilight interval at any point of the sky. Trudy Sekt. astrobot. AN Kazakh. SSR 8:245-249 '60. (MIRA 13:12)
(Twilight) (Light--Scattering)

APPROVED FOR RELEASE: 06/15/2000 CIA-RDP86-00513R001240020013-8"

"APPROVED FOR RELEASE: 06/15/2000 CIA-RDP86-00513R001240020013-8

PEREVERTUN, M.P.

Spectral reflection ability of some plants within the range of 650-1200 mm. Trudy Sekt. astrobot. AN Kazakh. SSR 5:134-148 '57. (MLRA 10:6)
(Plants--Spectra)

APPROVED FOR RELEASE: 06/15/2000 CIA-RDP86-00513R001240020013-8"

"APPROVED FOR RELEASE: 06/15/2000 CIA-RDP86-00513R001240020013-8

L 48322-65 EWT(d)/EPA(s)-2/EWT(m)/EWG(s)-2/EWA(d)/EWP(v)/T/EWP(t)/EWP(k)/EWP(h)/EWP(b)/EWP(1)/EWA(c) Pf-4/Pw-4 JD/HM

ACCESSION NR: AP5006842 S/0227/65/000/002/0029/0030

AUTHOR: Brichkin, A. V.; Perevertun, V. V.; Mamadaliyev, K. M. (Engineers)

TITLE: Cutting of concrete and reinforced concrete with the flame of a rocket torch

SOURCE: Promyshlennoye stroitel'stvo, no. 2, 1965, 29-30

TOPIC TAGS: cutter, concrete cutting, torch design, rocket torch

ABSTRACT: The authors discuss rocket-type torches of various design developed in recent years at the Problemnaya laboratoriya Kazakhskogo politekhnicheskogo instituta (Problem Laboratory of the Kazakh Polytechnic Institute) and found to be superior to the pneumatic drill or sledge hammer for drilling, cutting and grinding hard rock, concrete, reinforced concrete and other very hard materials. The rocket-type torch, as shown in Fig. 1 of the Enclosure, consists of a combustion chamber, a nozzle for ejecting the flame of heated gas, and a spud for admitting and mixing the fuel (kerosene) with the oxidizing agent (oxygen), protected by a cladding and cooled by a water jacket. The physical and operational advantages of this torch over other flame-using devices, such as oxygen and acetylene torches or the thermite process, are illustrated by rates of 5 to 8.5 m/hr. achieved in

Card 1/3

APPROVED FOR RELEASE: 06/15/2000 CIA-RDP86-00513R001240020013-8"

"APPROVED FOR RELEASE: 06/15/2000 CIA-RDP86-00513R001240020013-8

L 48322-65

ACCESSION NR: AP5006842

drilling 40-60 mm holes in concrete and reinforced concrete. Orig. art. has: 2 figures and 1 table.

ASSOCIATION: None

SUBMITTED: 00 ENCL: 01 SUB CODE: IE, MT

NO REF SOV: 001 OTHER: 001

Card 2/3

APPROVED FOR RELEASE: 06/15/2000 CIA-RDP86-00513R001240020013-8"

"APPROVED FOR RELEASE: 06/15/2000 CIA-RDP86-00513R001240020013-8

BRICHKIN, A.V.; MARGORIN, G.N.; PEREVERTUN, V.V.; MIKHEYEV, S.V.; GENBACH, A.N.

Design of a rodless thermal drilling shell for widening boreholes. Trudy Inst.gor.dela AN Kazakh.SSR 9:128-134 '62. (MIRA 15:8)
(Boring machinery)

APPROVED FOR RELEASE: 06/15/2000 CIA-RDP86-00513R001240020013-8"

"APPROVED FOR RELEASE: 06/15/2000 CIA-RDP86-00513R001240020013-8

I.

USSR/Physiology of Plants - Photosynthesis.

Abs Jour : Ref Zhur - Biol., No 15, 1958, 67787

Author : Perevertun, M.P.

Inst : Academy of Sciences KazSSR.

Title : Spectral-Reflective Capacity of Certain Plant Species in the 650-1200 mμ Area.

Orig Pub : Tr. Sektora astrobotan. AN KazSSR, 1957, 5, 134-148.

Abstract : The reflective capacity in the infra-red (IR) region of the spectrum was determined for 17 plant species. The IR -effect arises through the complete internal reflection and dispersion of IR-rays from the air-gas bubbles in the spongy parenchyma stratum. A diffraction spectrograph with electro-optic converter was used, permitting the acquisition of plant spectra in reflected light at the 650-1200 interval. The IR effect was studied for a year

Card 1/2

APPROVED FOR RELEASE: 06/15/2000 CIA-RDP86-00513R001240020013-8"

"APPROVED FOR RELEASE: 06/15/2000 CIA-RDP86-00513R001240020013-8

PEREVERTUN, M.P.

Studying the spectral characteristics of plants in infrared region. Trudy Sekt. astrobot. AN Kazakh.SSR 3:177-194 '55. (MLRA 9:12)

(Spectrum, Infrared) (Plants--Spectra)

APPROVED FOR RELEASE: 06/15/2000 CIA-RDP86-00513R001240020013-8"

"APPROVED FOR RELEASE: 06/15/2000 CIA-RDP86-00513R001240020013-8

KAZACHEVSKIY, V.M.; PEREVERTUN, M.P.

Temperature coefficient of an indicator galvanometer. Izv.AN Kazakh.SSR no.99: 79-83 '51. (MLRA 6:10)
(Galvanometer)

APPROVED FOR RELEASE: 06/15/2000 CIA-RDP86-00513R001240020013-8"

"APPROVED FOR RELEASE: 06/15/2000 CIA-RDP86-00513R001240020013-8

KALININ, S.K.; FAYN, E.Ye.; PEREVERTUN, V.M.; BARLYBAYEVA, K.Kh., red.; PROKHOROV, V.P., tekhn.red.

[Use of a DFS-3 (13) diffraction spectrograph for the analysis of mineral raw materials] Primenenie difraktsionnogo spektrografa DFS-3 (13) dlia analiza mineral'nogo syr'ia. Alma-Ata, Izd-vo Akad.nauk Kazakhskoi SSR, 1960. 35 p. (MIRA 13:5)
(Spectrum analysis)

APPROVED FOR RELEASE: 06/15/2000 CIA-RDP86-00513R001240020013-8"

"APPROVED FOR RELEASE: 06/15/2000 CIA-RDP86-00513R001240020013-8

PEREVERTUN V.N.

24(7) SOV/48-23-9-4/57

AUTHORS: Kalinin, S. K., Marzuvanov, V. L., Paym, E. Ye., Zamyatine, G. N., Perevertun, V. N., Terekhovich, S. L.

TITLE: Atlas of Spectral Lines for a Spectrograph With Diffraction Grating

PERIODICAL: Izvestiya Akademii nauk SSSR. Seriya fizicheskaya, 1959, Vol 23, Nr 9, pp 1061-1063 (USSR)

ABSTRACT: In connection with the series production of diffraction grating spectrographs, the necessity of methodical directives and of atlases is pointed out. At present, the authors are preparing an atlas of spectral lines for grating spectrographs. The atlas consists of plane tables (planshet) and of their descriptions. In figure 1, for example, the iron spectrum in a range extending over 66 Å is shown. This spectrum was recorded by means of the DFS-3 spectrograph, the grating of which has 300 grating lines per mm. The spectra recorded were enlarged 20 times and the lengths of the plane tables amount to 370 mm, so that, for example, the entire iron spectrum has a total length of 25 m. Owing to the high dispersion of the instrument about 7000 lines of 85 elements are recorded, and the intensity of the lines is estimated according to a 12-degree

Card 1/2

3

scale; if the sample contains more than 10% of the element, the lines are marked by the figure 1, and if it contains less than 0.0001%, by the figure 12. In the description the properties of the lines are discussed, and directives are given for carrying out analyses. There are 1 figure and 3 Soviet references.

ASSOCIATION: Institut yadernoy fiziki Akademii nauk KazSSR (Institute of Nuclear Physics of the Academy of Sciences of the Kazakhskaya SSR)

Card 2/2

APPROVED FOR RELEASE: 06/15/2000 CIA-RDP86-00513R001240020013-8"

"APPROVED FOR RELEASE: 06/15/2000 CIA-RDP86-00513R001240020013-8

BRICHKIN, A.V., doktor tekhn.nauk; PEREVERTUN, V.V., inzh.; MAMADALIYEV, K.M., inzh.

Cutting concrete and reinforced concrete with the flame of a jet burner. Prom.stroi. 42 no.2:29-30 '65.

(MIRA 18:4)

APPROVED FOR RELEASE: 06/15/2000 CIA-RDP86-00513R001240020013-8"

"APPROVED FOR RELEASE: 06/15/2000 CIA-RDP86-00513R001240020013-8

BRICHKIN, A.V., prof.; PEREVERTUN, V.V., inzh.; GENBACH, A.N., inzh.

Treating hard rocks, concrete, and reinforced concrete with a high-temperature ultrasonic gas jet. Izv. vys. ucheb. zav.; gor. zhur. no.6:61-67 '61. (MIRA 16:7)

1. Kazakhskiy politekhnicheskiy institut. Rekomendovana kafedroy razrabotki rudnykh mestorozhdeniy. 2. Chlen-korrespondent AN Kazakhskoy SSR (for Brichkin).
(Rocks—Thermal properties)
(Concrete—Thermal properties)

APPROVED FOR RELEASE: 06/15/2000 CIA-RDP86-00513R001240020013-8"

"APPROVED FOR RELEASE: 06/15/2000 CIA-RDP86-00513R001240020013-8

89964

12.9000 2411
15.3000 1273 also 2708

S/097/60/000/011/007/007
A053/A029

AUTHORS: Brichkin, A. V., Professor, Doctor of Technical Sciences, Perevertun, V. V.

TITLE: Cutting of Concrete and Reinforced Concrete With a High-Temperature and High-Velocity Gas Jet

PERIODICAL: Beton i zhelezobeton, 1960, No. 11, pp. 529 - 530

TEXT: The article describes a ТР-14/22-3 (TR-14/22/3) gas jet cutting device of high efficiency, which ejects a torch of high temperature at supersonic speed (Ref. 1, 2), emanating from a combustion chamber burning kerosene in oxygen. The temperature which the gas jet develops is high enough to cut through rock and to carry off loose scales, but not sufficient to cut through concrete 60 mm thick at a faster rate than 1 m per hour. In order to obtain greater cutting efficiency, it was necessary to add a fixture whereby a compound of aluminum and ferric oxide in powder form was fed into the torch from a bin under a pressure of 3 - 4 kg/cm^2. Ferric oxide ensures easy melting and fluid slag, while burning of aluminum releases a great amount of heat. Under the combined action of the high temperature gas jet and the

Card 1/3

APPROVED FOR RELEASE: 06/15/2000 CIA-RDP86-00513R001240020013-8"

"APPROVED FOR RELEASE: 06/15/2000 CIA-RDP86-00513R001240020013-8

89964

S/097/60/000/011/007/007
A053/A029

Cutting of Concrete and Reinforced Concrete With a High-Temperature and High-Velocity Gas Jet

described powder mixture, a reinforced concrete plate 60 mm thick was cut through at a rate of 8 m per hour. The consumption of oxygen amounts to 12 m^3/hr, of kerosene to 6 l/hr, of cooling water to 80-90 l/hr, of aluminum powder to 3-4 kg/hr. Concrete plates 120 mm thick are cut at a rate of 5-6 m/hr. Physico-mechanical changes in the concrete take place only to a depth of 0.5 to 1 cm from the surface of the cut. There is 1 diagram, 1 photograph and 2 Soviet references.

Figure 1: Gas jet cutting device TR-14/22-3 for cutting and processing of concrete and reinforced concrete
a - general view; b - burner (cross section), 1 - hose for powder mixture, 2 - valve, 3 - pipe, 4 - nozzle, 5 - burner, 6 - oxygen hose, 7 - kerosene hose, 8 - water hose, 9 - body of cutter, 10 - water channel, 11 - kerosene channel, 12 - oxygen channel, 13 - distribution chamber, 14 - jacket, 15 - spray burner, 16 - combustion chamber, 17 - calibrator, 18 - starting mechanism box, 19 - nozzle.

Card 2/3

APPROVED FOR RELEASE: 06/15/2000 CIA-RDP86-00513R001240020013-8"

"APPROVED FOR RELEASE: 06/15/2000 CIA-RDP86-00513R001240020013-8

89964

S/097/60/000/011/007/007
A053/A029

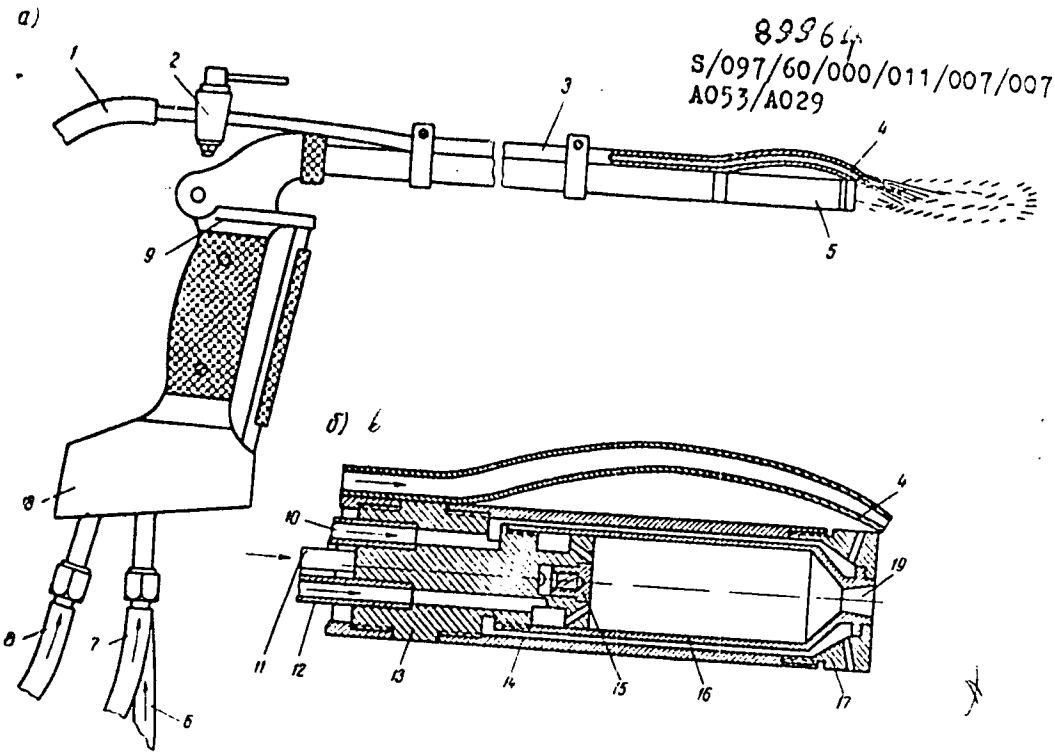

Card 3/3

APPROVED FOR RELEASE: 06/15/2000 CIA-RDP86-00513R001240020013-8"

"APPROVED FOR RELEASE: 06/15/2000 CIA-RDP86-00513R001240020013-8

BRICHKIN, A.V., doktor tekhn.nauk, prof.; PEREVERTUN, V.V.

Cutting plain and reinforced concrete using gas jet of high temperature and velocity. Bet. i zhel.-bet. no.11:529-530 N '60.

(Gas welding and cutting) (MIRA 13:11)

APPROVED FOR RELEASE: 06/15/2000 CIA-RDP86-00513R001240020013-8"