"APPROVED FOR RELEASE: 06/15/2000 CIA-RDP86-00513R001240020014-7

BRICHKIN, A.V.; PERVERTUN, V.V.

Parameters of the supersonic jet of a rocket-type burner and its field of persistent piercing. Izv. AN Kazakh. SSR. Ser.gor.dela no.2:45-54 '60.

(Rock drills) (MIRA 13:10)

APPROVED FOR RELEASE: 06/15/2000 CIA-RDP86-00513R001240020014-7"

"APPROVED FOR RELEASE: 06/15/2000 CIA-RDP86-00513R001240020014-7

ZHELEZNIKOV, I.G.; PEREVERZA, T.S.

Ionization of the air at the Borovoye health resort. Trudy Inst. kraev. pat. AN Kazakh. SSR 7:49-52 '59. (MIRA 13:3)
(BOROVOYE--AIR, IONIZED)

APPROVED FOR RELEASE: 06/15/2000 CIA-RDP86-00513R001240020014-7"

"APPROVED FOR RELEASE: 06/15/2000 CIA-RDP86-00513R001240020014-7

ZHELEZNIKOV, I.G.; PEREVERZA, T.S.

Ionization of the air at the Borovoye health resort. Trudy Inst. kraev.pat. AN Kazakh. SSR 7:53-57 '59. (MIRA 13:3)
(BOROVOYE--CLIMATOLOGY, MEDICAL)

APPROVED FOR RELEASE: 06/15/2000 CIA-RDP86-00513R001240020014-7"

"APPROVED FOR RELEASE: 06/15/2000 CIA-RDP86-00513R001240020014-7

PETROVICH, A., Eng.

Straw

Mechanization of straw harvesting, MTS, 12, No. 1, 1952

9. Monthly List of Russian Accessions. Library of Congress, October 1952, Uncl.

APPROVED FOR RELEASE: 06/15/2000 CIA-RDP86-00513R001240020014-7"

"APPROVED FOR RELEASE: 06/15/2000 CIA-RDP86-00513R001240020014-7

[illegible], A. Eng.

Harvesting Machinery

Mechanization of straw harvesting. MTS 12 No. [illegible], 1[illegible]

9. Monthly List of Russian Accessions, Library of Congress, October 1953, Uncl.

2

APPROVED FOR RELEASE: 06/15/2000 CIA-RDP86-00513R001240020014-7"

"APPROVED FOR RELEASE: 06/15/2000 CIA-RDP86-00513R001240020014-7

SOV/124-58-10-11471

Translation from: Referativnyy zhurnal, Mekhanika, 1958, Nr 10, p 110 (USSR)

AUTHORS: Vergun, P.I., Vilutis, A.F., Ivanov, V.N., Pereverzev, A.A., Petryagin, I.N., Yanyukhin, G.F.

TITLE: Calculations of Critical Loads and Frequencies of Natural Vibrations of Parabolic Arches (Vychisleniye kriticheskikh nagruzok i chastot sobstvennykh kolebaniy parabolicheskikh arok)

PERIODICAL: Sb. stud. nauchn. rabot. Altaysk. s.-kh. in-t, 1957, Nr 6, pp 89-98

ABSTRACT: Bibliographic entry

Card 1/1

APPROVED FOR RELEASE: 06/15/2000 CIA-RDP86-00513R001240020014-7"

"APPROVED FOR RELEASE: 06/15/2000 CIA-RDP86-00513R001240020014-7

ACC NR: AT7004002 SOURCE CODE: UR/0000/66/000/000/0240/0248

AUTHOR: Ivashin, V. V.; Pereverzev, A. G.; Sinitsyn, A. V.; Sipaylov, G. A.

ORG: Scientific Research Institute of Nuclear Physics, Electronics, and Automation, Tomsk Polytechnic Institute (Nauchno-issledovatel'skiy institut yadernoy fiziki, elektroniki i avtomatiki pri TPI)

TITLE: Producing quasi-triangular and quasi-trapesoidal high-power current impulses in inductive loads

SOURCE: Mezhvuzovskaya konferentsiya po elektronnym uskoritelyam. 5th, Tomsk, 1964. Elektronnyye uskoriteli (Electron accelerators); trudy konferentsii. Moscow, Atomizdat, 1966, 240-248

TOPIC TAGS: pulse shaper, pulse shape, particle accelerator

ABSTRACT: A new impulse shaper (see figure) is described which produces quasi-triangular, quasi-trapezoidal, and stepped impulses and uses a capacitive switching in an LC oscillatory circuit. Main capacitor bank C_1 and small auxiliary banks C_2, C_2' have initial polarities as indicated in the figure. When thyratrons 1, 1′ are fired,

Card 1/2

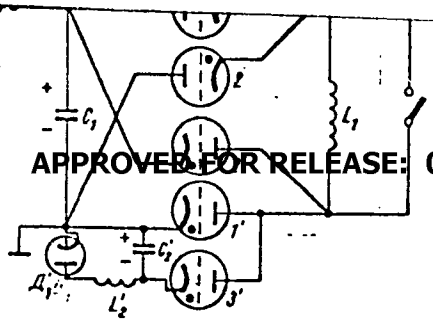

APPROVED FOR RELEASE: 06/15/2000 CIA-RDP86-00513R001240020014-7"

capacitors C_2, C_2' into the power circuit. The new circuit preempts the current in 1, 1′ which become nonconductive. Later, C_2, C_2' acquire the reverse polarity and the current is transformed to 3, 3′; the oscillatory process ends when the current drops to zero. Meanwhile, the load current flows in one direction and has a near-triangular shape. A modification of the above circuit produces quasi-trapezoidal or stepped impulse shapes. Application of the above circuit to particle accelerators promises higher (up to 3 times) repetition rates and efficiency of accelerator operation. An experimental verification is claimed. Orig. art. has: 4 figures and 7 formulas.

SUB CODE: 09 / SUBM DATE: 06Mar66 / ORIG REF: 003 / OTH REF: 001

Card 2/2

"APPROVED FOR RELEASE: 06/15/2000 CIA-RDP86-00513R001240020014-7

PEREVERZEV, A.K. (Biysk)

Some problems involving waves in an ideal liquid with elastic boundaries. PMTF no. [illegible] N-D '63. (MIRA [illegible])

APPROVED FOR RELEASE: 06/15/2000 CIA-RDP86-00513R001240020014-7"

"APPROVED FOR RELEASE: 06/15/2000 CIA-RDP86-00513R001240020014-7

S/032/61/027/004/026/028
B103/B201

AUTHOR: Pereverzev, A. N.

TITLE: Chamber for the study of the microstructure of substances in the medium of liquefied gases

PERIODICAL: Zavodskaya laboratoriya, v. 27, no. 4, 1961, 481

TEXT: The chamber worked out by the author permits the microscopic analysis of substances which, dissolved in liquefied gases (temperature -30° to 80°C), are subjected to high pressure (50-60 atm) (Fig.). In the center of a steel housing 1 (124 × 124 × 45 mm) bushing 2 is mounted. By shifting it, it is possible to vary the layer thickness of the solution under investigation between 0.0 and 5.0 mm, depending on transparency. Both in the central opening of the housing and in the bushing, glass windows (field diameter 12 mm, thickness 4.2 mm) are fastened by nuts 4 between inserts 3 made of oil-resistant rubber. The clearance between bushing and housing is packed by packing box 6-8 (ring 6, packing 7, bushing 8). The solution to be examined is filled into the working space of the chamber through opening 9. The cooling liquid flows through the

Card 1/3

APPROVED FOR RELEASE: 06/15/2000 CIA-RDP86-00513R001240020014-7"

"APPROVED FOR RELEASE: 06/15/2000 CIA-RDP86-00513R001240020014-7

opening 10 which is shut off by cover 11. A thermometer is placed in opening 12. Before starting with the examination, a weighed portion of the substance under investigation is put into a sampler along with the prescribed amount of solvent. After the substance has melted and has mixed with the solvent, the sampler is connected to the chamber, and the solution is conducted into the latter. The chamber together with the solution is then cooled down at a given rate to the temperature prescribed. The resulting crystalline structure has been examined under the microscope. The author has used the chamber to study crystals of paraffin-containing petroleum products in liquefied hydrocarbon gases. [Abstracter's note: Essentially complete translation]. There is 1 figure.

ASSOCIATION: Groznenskiy neftyanoy nauchno-issledovatel'skiy institut (Groznyy Petroleum Scientific Research Institute)

APPROVED FOR RELEASE: 06/15/2000 CIA-RDP86-00513R001240020014-7"

"APPROVED FOR RELEASE: 06/15/2000 CIA-RDP86-00513R001240020014-7

Chamber for the study of the ...

S/032/61/027/004/026/028
B103/B201

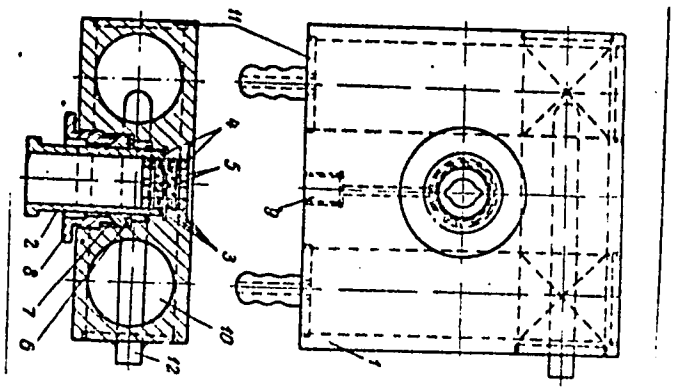

Card 3/3

APPROVED FOR RELEASE: 06/15/2000 CIA-RDP86-00513R001240020014-7"

"APPROVED FOR RELEASE: 06/15/2000 CIA-RDP86-00513R001240020014-7

ACCESSION NR: AT4016003 S/2625/63/000/015/0229/0240

AUTHOR: Pereverzev, A. N.

TITLE: Deparaffination of residual oils in propane solution

SOURCE: Grozny*y. Neftyanoy nauchno-issledovatel'skiy institut. Trudy*, no. 15, 1963. Tekhnologiya pererabotki nefti i gaza. Neftekhimiya (Technology of processing petroleum and gas. Petroleum chemistry), 229-240

TOPIC TAGS: residual oil, deparaffination, petroleum refining, propane, deasphaltization

ABSTRACT: In order to facilitate the development of a combined automatic operation in which deasphaltization, solvent purification of residual crude and deparaffination would be carried out simultaneously, work was done with Karabulak-Achaluk petroleum at the Groznenskiy neftemaslozavod (Grozny*y plant for Petroleum and Oil) to determine the best conditions for deparaffination in propane, an inexpensive, accessible and selective solvent which is already commonly used for deasphaltization and purification of residual crude. Fig. 1 in the Enclosure shows a schematic diagram of the combined apparatus which was developed. Comparative studies on the yields and properties of the deparaffination products in various

Card 1/3

APPROVED FOR RELEASE: 06/15/2000 CIA-RDP86-00513R001240020014-7"

"APPROVED FOR RELEASE: 06/15/2000 CIA-RDP86-00513R001240020014-7

ACCESSION NR: AT4016003

solvents and at various temperatures showed that deparaffination can be carried out as efficiently in propane as in other solvents currently used, provided that the conditions used be those specified for the processing of residual oils having solidification points between -15 and -20C. Thus, the temperature of deparaffination should be -35 to -40C, the relative weight of raw material and propane should be 1:3.5, the consumption of propane for washing and dissolving the press cakes should be 1.5 times the weight, and the expected yield of deparaffinated oil is 60%. Equipment of refineries for incomplete deparaffination is recommended. "A process for deparaffination in propane is being developed at the GrozNII under the supervision of N. F. Bogdanov and N. I. Chernozhukov." Orig. art. has: 2 figures and 5 tables.

ASSOCIATION: Neftyanoy nauchno-issledovatel'skiy institut, Grozny*y (Scientific Research Institute for Petroleum)

SUBMITTED: 00 DATE ACQ: 31Jan64 ENCL: 01

SUB CODE: FP NO REF SOV: 003 OTHER: 000

Card 2/3

APPROVED FOR RELEASE: 06/15/2000 CIA-RDP86-00513R001240020014-7"

"APPROVED FOR RELEASE: 06/15/2000 CIA-RDP86-00513R001240020014-7

ACCESSION NR: AT4016003

ENCLOSURE: 01

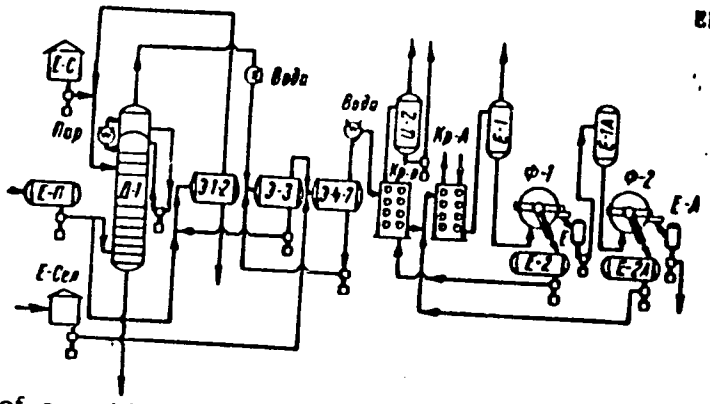

Schematic diagram of a combined installation for the production of residual oils, including the processes of deasphaltization, solvent purification in propane solution and deparaffination. E-C, E- and E-ce = tanks of raw material, propane and selecto, resp.; ap = steam; -1 = deasphaltization column; -1-2, etc. = extractor sections; Bo a = water; Kp-p and Kp-A = regenerative and ammonia (propane) crystallizers; E-1 and E-1A = pressure tanks; -1 and -2 = drum filters operating under pressure; E-2 and E-2A = receivers for the filtrate; E and E-A = receivers for the petrolatum.

Card 3/3

APPROVED FOR RELEASE: 06/15/2000 CIA-RDP86-00513R001240020014-7"

"APPROVED FOR RELEASE: 06/15/2000 CIA-RDP86-00513R001240020014-7

PEREVERZEV, A.N.

Dewaxing of residual oils in a propane solution. Trudy GrozNII no. 15:229-240 '63. (MIRA 17:5)

APPROVED FOR RELEASE: 06/15/2000 CIA-RDP86-00513R001240020014-7"

"APPROVED FOR RELEASE: 06/15/2000 CIA-RDP86-00513R001240020014-7

S/081/62/000/005/075/112
B160/B138

AUTHOR: Pereverzev, A. N.

TITLE: Development of a propane dewaxing process as a part of a combined oil production installation

PERIODICAL: Referativnyy zhurnal. Khimiya, no. 5, 1962, [illegible] - [illegible], abstract 5M16[illegible] (Tr. Groznensk. neft. n.-i. in-t, no. 11, 1961, 146 - 159)

TEXT: Laboratory apparatus was used to study a process for dewaxing the raffinates obtained by Duo-Sol processing Zhirnovo and Mukhanovo devonian petroleum concentrates in a propane solution. The data obtained were compared with those from the process of paraffinic and cylinder distillates and deasphaltized bitumen from Groznyy paraffinic petroleum. It was found that a phenol-cresol mixture in the propane solution does not prevent dewaxing and can be used directly on solutions of refined products obtained in the Duo-Sol processing of oils. In propane dewaxing the products of residual origin are filtered more effectively than the distillate products; this is because the paraffin wax separates from the solutions in crystal formations which are dendritic in nature. Mono-

Card 1/2

APPROVED FOR RELEASE: 06/15/2000 CIA-RDP86-00513R001240020014-7"

"APPROVED FOR RELEASE: 06/15/2000 CIA-RDP86-00513R001240020014-7

crystalline formations of flakes of paraffin wax with highly developed and interconnected surfaces are characteristic for the distillate products; this makes it difficult to separate them from the liquid phase. If a process for dewaxing residual refined products in a solution of propane is included as part of a combined plant for the production of oils (deasphaltization and Duo-Sol) considerable technical and economic improvements can be achieved. [Abstracter's note: Complete translation.]

APPROVED FOR RELEASE: 06/15/2000 CIA-RDP86-00513R001240020014-7"

"APPROVED FOR RELEASE: 06/15/2000 CIA-RDP86-00513R001240020014-7

PEREVERZEV, A.N.

Camera for examining the microstructure of substances in liquefied gas media. Zav. lab. 27 no. 4:481 '61. (MIRA 14:4)

1. Groznenskiy neftyanoy nauchno-issledovatel'skiy institut.
(Microscopy--Technique)

APPROVED FOR RELEASE: 06/15/2000 CIA-RDP86-00513R001240020014-7"

"APPROVED FOR RELEASE: 06/15/2000 CIA-RDP86-00513R001240020014-7

BOGDANOV, N.F.; PEREVERZEV, A.N.

"Production and refining of oils from Baku petroleums" by A.M. Kuliev, R.Sh.Kuliev, M.I.Aliev. Reviewed by N.F.Bogdanov, A.N. Pereverzev. Azerb.neft.khoz. 39 no.9:48 S'60. (MIRA 13:10)
(Baku region--Petroleum--Analysis) (Lubrication and lubricants) (Kuliev, A.M.) (Kuliev, R.Sh.) (Aliev, M.I.)

APPROVED FOR RELEASE: 06/15/2000 CIA-RDP86-00513R001240020014-7"

"APPROVED FOR RELEASE: 06/15/2000 CIA-RDP86-00513R001240020014-7

BOGDANOV, N.F.; TIMOFEYEV, V.V.; PEREVERZEV, A.N.; GLADYSHEV, V.P.

Obtaining a low-melting paraffin from diesel fuel fractions by filter pressing and sweating. Trudy GrozNII no. 15:201-212 '63.
(MIRA 17:5)

APPROVED FOR RELEASE: 06/15/2000 CIA-RDP86-00513R001240020014-7"

"APPROVED FOR RELEASE: 06/15/2000 CIA-RDP86-00513R001240020014-7

PERKOV, V.V., gornyy inzh.; GUSENKOV, A.M., gornyy inzh.

Complex recovery of minerals in the Moscow coal basin. Ugol' 39 no.3:57-59 My'64. (MIRA 17:5)

APPROVED FOR RELEASE: 06/15/2000 CIA-RDP86-00513R001240020014-7"

"APPROVED FOR RELEASE: 06/15/2000 CIA-RDP86-00513R001240020014-7

BOGDANOV, Nikolay Filippovich; ~~PEREVERZEV~~, Anatoliy Nikolayevich; YEFREMOVA, T.D., red.; FEDOTOVA, I.G., tekhn. red.

[Dewaxing of petroleum products] Deparafinizatsiia neftianykh produktov. Moskva, Gos. nauchno-tekhn. izd-vo neft. i gorno-toplivnoi lit-ry, 1961. 245 p. (MIRA 14:5)
(Lubrication and lubricants) (Petroleum--Refining)
(Paraffins)

APPROVED FOR RELEASE: 06/15/2000 CIA-RDP86-00513R001240020014-7"

"APPROVED FOR RELEASE: 06/15/2000 CIA-RDP86-00513R001240020014-7

PEREVERZEV, A.Ya.

Lowering and lifting operations in underground well repairing. Trudy Akad. neft. prom. no.2:191-197 '55. (MIRA 8:5
(Oil wells--Equipment and supplies--Repairing)

APPROVED FOR RELEASE: 06/15/2000 CIA-RDP86-00513R001240020014-7"

"APPROVED FOR RELEASE: 06/15/2000 CIA-RDP86-00513R001240020014-7

DUBRAVA,T.S.; PEREVERZEV,A.Ye., doktor tekhnicheskikh nauk, redaktor; IVANOVA,L.P., redaktor

[Soviet intellectuals in the struggle for technical progress] Sovetskaia intelligentsiia v bor'be za tekhnicheskii progress. Leningrad, Vses.ob-vo po rasprostraneniiu polit.i nauchn. znanii Leningradskoe otd-nie, 1952. 34 p. [Microfilm] (MLRA 9:3)
(Intellectuals, Russian)

APPROVED FOR RELEASE: 06/15/2000 CIA-RDP86-00513R001240020014-7"

"APPROVED FOR RELEASE: 06/15/2000 CIA-RDP86-00513R001240020014-7

VIL'NER, A.N., prof., doktor vet. nauk; PEREVERZEV, A.Ye., aspirant.

Infrared irradiation of baby pigs. Zhivotnovodstvo 20 no.1:46-47 Ja '58. (MIRA 11:1)

(Swine) (Infrared rays--Physiological effect)

APPROVED FOR RELEASE: 06/15/2000 CIA-RDP86-00513R001240020014-7"

"APPROVED FOR RELEASE: 06/15/2000 CIA-RDP86-00513R001240020014-7

USSR/Farm Animals. Swine.

Q-2

Abs Jour: Ref Zhur - Biol., No. 22, 1958, 101202

Author : Vil'ner, A.M., Pereverezev, A.Ye.

Inst : -

Title : Irradiating Piglets with Infrared Rays.

Orig Pub: Zhivotnovodstvo, 1958, No. 1, 46-47

Abstract: Piglets irradiated with IR [infrared] rays had a higher Hb blood content, were more active and grew faster. The fastest growth and development were noted in up to 2-week-old piglets.

Card 1/1

APPROVED FOR RELEASE: 06/15/2000 CIA-RDP86-00513R001240020014-7"

"APPROVED FOR RELEASE: 06/15/2000 CIA-RDP86-00513R001240020014-7

S/194/61/000/008/043/092
D201/D304

AUTHOR: Pereverzev, B.A.

TITLE: A method of increasing the speed of action of mixers for analyzing physical parameters of multi-component mixtures

PERIODICAL: Referativnyy zhurnal. Avtomatika i radioelektronika, no. 8, 1961, 58, abstract 8 V440 (V sb. Avtomat. upravleniye, M., AN SSSR, 1960, 169-174)

TEXT: A description is given of the arrangement for mixing multi-component mixtures for analyzing their physical properties, in automatic control, and regulation of technological processes in the chemical industry. The mixer dilutes the acid mixture to the required volumetric proportion with an accuracy of ± 0.1%; the temperature range of the acid mix at the mixer outlet is from 5 to 90°C, that of the water - from 5 to 25°C. The correct dosage of mixed liquids is assured by the thermostatic control of their tem-

Card 1/2

APPROVED FOR RELEASE: 06/15/2000 CIA-RDP86-00513R001240020014-7"

"APPROVED FOR RELEASE: 06/15/2000 CIA-RDP86-00513R001240020014-7

L 50741-65 EWT(d)/EWT(1)/EED-2/EWP(1)/EWA(h) Pq-4/Pg-4/Peb/Pk-4/Pl-4
IJP(c) BB/GG

ACCESSION NR: AP5015329

UR/0286/65/000/009/0089/0089
681.142.652.3

AUTHOR: Pereverzev, B. A.

TITLE: A method for recording integral power functions in the storage device of a functional converter. Class 42, No. 170744

SOURCE: Byulleten' izobreteniy i tovarnykh znakov, no. 9, 1965, 89

TOPIC TAGS: functional converter, computer converter, electronic equipment

ABSTRACT: This Author's Certificate introduces a method for recording integral power functions in the storage unit of a functional converter. This method is designed for automatically recording functions which are expressed as pulse-frequency signals. The output signals from a fractional power functional converter with a unit numerator are recorded on a carrier and read out by a reproducer in the direction opposite to the recording direction.

ASSOCIATION: none

Card 1/2

APPROVED FOR RELEASE: 06/15/2000 CIA-RDP86-00513R001240020014-7"

"APPROVED FOR RELEASE: 06/15/2000 CIA-RDP86-00513R001240020014-7

L 30741-65

ACCESSION NR: AF5015329

SUBMITTED: 05Mar64 ENCL: 00 SUB CODE: DP, EC

NO REF SOV: 000 OTHER: 000

Card 2/2

APPROVED FOR RELEASE: 06/15/2000 CIA-RDP86-00513R001240020014-7"

"APPROVED FOR RELEASE: 06/15/2000 CIA-RDP86-00513R001240020014-7

PEREVERZEV, B.A.

PHASE I BOOK EXPLOITATION SOV/4403

Akademiya nauk SSSR. Institut avtomatiki i telemekhaniki

Avtomaticheskoye upravleniye; [sbornik rabot] (Automatic Control; Collected Works) [Moscow] Izd-vo AN SSSR [1960] 431 p. Errata slip inserted. 5,500 copies printed.

Ed.: Ya.Z. Tsypkin, Doctor of Technical Sciences, Professor; Ed. of Publishing House: Ye.N. Grigor'yev; Tech. Ed.: G.A. Astaf'yeva.

PURPOSE: This collection of reports is intended for scientists and engineers engaged in the study of automation.

COVERAGE: The collection contains reports presented at the 6th Conference of Young Scientists of the Institut avtomatiki i telemekhaniki AN SSSR (Institute of Automation and Telemechanics of the Academy of Sciences USSR) in January 1959. The collection covers a wide range of scientific and technical problems connected with automatic control. No personalities are mentioned. References accompany each report.

Pereverzev, B.A. Method of Increasing the Quick Action of Mixers for the Analyzers of Physical Parameters in Multicomponent Mixtures 169

The author describes a small-size high-speed mixer for diluting a mixture of sulfuric and nitric acids in water. The mixer has been developed and built at the EB IAT AN SSSR (Design Office of the Institute of Automation and Telemechanics of the Academy of Sciences USSR). The mixer, which can be used for laboratory as well as for industrial purposes, dilutes the mixture of acids in a given volumetric ratio with a ± 0.1 per cent accuracy, while the mixture may have at the input of the mixer a temperature of 5 to 90°C, and water at a temperature of 5 to 25°C. The liquids are thermostatically controlled to a temperature of 20 ± 0.2°C in order to obtain a correct mixed dosage. The heat transfer coefficient between the liquid and the wall of the mixer attains a value of several tens of thousands of k calories per sq m. hr. °C. There are 4 references, all Soviet (including 1 translation).

Pizurarev, I.A. Application of the γ-Radiation Absorption Phenomenon for Automatic Checking of the Composition of Multicomponent Agents 175

The author discusses the application of the process of γ-radiation for continuous non-contact automatic control of the composition of mixtures with prefixed accuracy and time constant. The author discusses the use of radioactive isotopes for this purpose and describes the physical phenomenon of γ-ray radiation and absorption. He also includes a mathematical analysis of all the technological processes. He reviews the results obtained and discusses the practical purposes of the designed equipment. There are 3 references, all Soviet.

Tsaturova, I.A. Reduction of the Time Constant of the Mass-Spectrometer Output Device 183

The author describes and analyzes the problem of increasing the resolution of a mass-spectrometer by way of reducing the time constant of an electrometric amplifier with a 100 per cent negative feedback. Such amplifiers possess considerable inertia and are, as a rule, used as the output device of mass-spectrometers. The author suggests the use of a four-terminal network (passive or active) designed in such a way that its amplitude-phase characteristic is the reverse of that of the amplifier. There are 4 references, all Soviet.

Card 12/28

APPROVED FOR RELEASE: 06/15/2000 CIA-RDP86-00513R001240020014-7"

"APPROVED FOR RELEASE: 06/15/2000 CIA-RDP86-00513R001240020014-7

ACC NR: AR6034976 (N) SOURCE CODE: UR/0272/66/000/008/0076/0076

AUTHOR: Pereverzev, B. A.

TITLE: Domestic electric hygrometers

SOURCE: Ref. zh. Metrologiya i izmeritel'naya tekhnika, Abs. 8.32.576

REF SOURCE: Tr. Vses. Zaochn. energ. in-ta, vyp. 29, 1965, 7-15

TOPIC TAGS: moisture measurement, atmospheric humidity, hygrometer

ABSTRACT: The characteristics of the basic methods for measuring moisture and of electric hygrometers of Soviet design and recent development are given. A psychrometer suggested by the Institute for Agrophysics of VASKhNIL incorporates an M-54 heat-resistant microelement sensor housed in ceramic tubing which protects the thermometers against wind and insures equal inertia for both thermometers. An electric psychrometer was made by the Central Design Bureau of Prompribor is for moisture measurement and recording of moisture in chlorine. This instrument may be used in an explosion-hazard medium with 75—90% relative humidity and within a temperature range of 20—50C. Two sorption hygrometers have pickups made of oxidized aluminum and lead dioxide.

Card 1/2 UDC: 543.275.1.08:543.712(088.8):047

APPROVED FOR RELEASE: 06/15/2000 CIA-RDP86-00513R001240020014-7"

"APPROVED FOR RELEASE: 06/15/2000 CIA-RDP86-00513R001240020014-7

ACC NR: AR6034976

These and similar types of hygrometers feature electrodes from silver or platinum coatings which are vacuum deposited on semiconductor films. The electrodes method utilizes the electrolytic dependence on the ambient air moisture. Unstable characteristics and the necessity for frequent checking of calibration curves are the main disadvantages of the electrolytic pickups. An AVE-1 hygrometer is based on the principle of measuring the moisture content in gas by the electrolytic current method; this hygrometer was developed by VNIIGAZ of Glavgaz USSR, and it uses a film impregnated with phosphorus pentoxide. The instrument is used to determine and control moisture in gas pipelines. Its accuracy is ± 0.3 g/m^3 at a temperature range of 0—80C. The deformation method is based on linear dimensional changes of organic materials caused by changes in humidity. An instrument utilizing a viscous tape as a pickup sensor was developed at the Academy of Construction and Architecture USSR. It registers 30—80% relative humidity in the atmosphere. It is pointed out that there are no universal types of moisture meters for determining all variations and cases of humidity. Therefore, it is necessary to have hygrometers of various designs, which meet specific requirements and given conditions, parameters of the ambient medium and measurement limits. At the same time they must be adequately reliable, of high speed and convenient in use. Orig. art. has: 18 titles, and five illustrations. [KP]

Card 2/2 SUB CODE: 04/

APPROVED FOR RELEASE: 06/15/2000 CIA-RDP86-00513R001240020014-7"

"APPROVED FOR RELEASE: 06/15/2000 CIA-RDP86-00513R001240020014-7

PEREVERZEV, B.I.

Electric equipment of the physics laboratory. Fiz.v shkole 7 no.4:73-83 (MIRA 6:11)

1. Leningrad, 359-ya shkola. (Physical laboratories)

APPROVED FOR RELEASE: 06/15/2000 CIA-RDP86-00513R001240020014-7"

"APPROVED FOR RELEASE: 06/15/2000 CIA-RDP86-00513R001240020014-7

PEREVERZEV, B. I.

PEREVERZEV, B. I.: "Problems of the electrical equipment of the physics laboratory in the intermediate school." Min Education RSFSR. Leningrad State Pedagogical Inst imeni A. I. Gertsen. Leningrad 1956. (Dissertation for the Degree of Candidate in Pedagogical Science.)

Knizhnaya Letopis'
No 32, 1956. Moscow.

APPROVED FOR RELEASE: 06/15/2000 CIA-RDP86-00513R001240020014-7"

"APPROVED FOR RELEASE: 06/15/2000 CIA-RDP86-00513R001240020014-7

PEREVERZEV, B.I. (Leningrad)

Practical work in electrical engineering. Fiz. v shkole 19 no.1:61-69 Ja-F '59. (MIRA 12:3)

1. 157-ya shkola.
(Electric engineering--Study and teaching)

APPROVED FOR RELEASE: 06/15/2000 CIA-RDP86-00513R001240020014-7"

"APPROVED FOR RELEASE: 06/15/2000 CIA-RDP86-00513R001240020014-7

PEREVERZEV, B.I.

The teaching of electric engineering following the new curriculum. Politekh. obuch. no.9:18-24 S '57. (MIRA 10:9)

1. 157-ya srednyaya shkola, Leningrad.
(Electric engineering--Study and teaching)

APPROVED FOR RELEASE: 06/15/2000 CIA-RDP86-00513R001240020014-7"

"APPROVED FOR RELEASE: 06/15/2000 CIA-RDP86-00513R001240020014-7

PEREVERZEV, D.A.

Some characteristics of the cooling of steam-turbine elements.
Sbor.trud.Lab.gidr.mash. no.9:124-139 '61. (MIRA 15:3)
(Steam turbines--Cooling)

APPROVED FOR RELEASE: 06/15/2000 CIA-RDP86-00513R001240020014-7"

"APPROVED FOR RELEASE: 06/15/2000 CIA-RDP86-00513R001240020014-7

L 4547-66 EWT(m)/EWP(w)/EWP(f)/EWP(v)/T-2/EWP(k)/ETC(m) WW/EM

ACC NR: AP5024600

UR/0114/65/000/009/0024/0027
62-253:536.5.001.5

AUTHOR: Pereverzev, D.A. (Candidate of technical sciences); Provolotskiy, L.V. (Engineer); Chirkin, N.B. (Engineer)

TITLE: Temperature field of a turbine rotor cooled by the passage of vapor through circular channels inside the blade stem

SOURCE: Energomashinostroyeniye, no. 9, 1965, 24-27

TOPIC TAGS: turbine rotor, temperature distribution, gas flow, turbine blade, turbine cooling, blade cooling

ABSTRACT: The results of the study of the temperature field of the cooled drum rotor of the SKR-100 turbine presented in this paper complete the investigation of the static thermal model of the rotor. The results describe temperature fields in the case of circular channels distributed in such a manner that the rate of outflow from the preceding channels is fully quenched. It is shown that the circular channels in the SKR-100 turbine under investigation produce the same degree of cooling as the elliptic channels within staggered blade distribution used by KhTGZ im. Kirova. In view of the greater technological simplicity of circular channel production as compared with the oval ones, the new approach is recommended for the authors for use in the future design of supercritical turbines (up to 400 at. abs., 700C). The substitution of circular channels does not seem to affect the nonstationary temperature field. Orig. art. has: 6 formulas, 5 figures, and 1 table.

Card 1/2

09010598

APPROVED FOR RELEASE: 06/15/2000 CIA-RDP86-00513R001240020014-7"

"APPROVED FOR RELEASE: 06/15/2000 CIA-RDP86-00513R001240020014-7

L 4547-66

ACC NR: AP5024600

ASSOCIATION: none

SUBMITTED: 00 ENCL: 00 SUB CODE: PR, IE, TD

NO REF SOV: 005 OTHER: 000

Card 2/2

APPROVED FOR RELEASE: 06/15/2000 CIA-RDP86-00513R001240020014-7"

"APPROVED FOR RELEASE: 06/15/2000 CIA-RDP86-00513R001240020014-7

S 262 62 000 014 005 016
1007 1207

AUTHOR: Pereverzev, D. A.

TITLE: Certain peculiar features of the steam-turbine cooling system

PERIODICAL: Referativnyy zhurnal, otdel'nyy vypusk. 42. Silovyye ustanovki, no 14, 1962, 22, abstract 42.14.137 (Coll. tr. Labor. mashin. gidravl. AS UkrSSR, no. 9, 1961, 124 139)

TEXT: The experience in construction of gas turbine units is used in the design of steam-turbine cooling systems. However, the cooling of steam turbine elements by steam of initial pressure and lower temperature ensures much higher cooling efficiency and considerably smaller losses than cooling of gas turbines by an air stream of same initial conditions. There are 10 figures and 8 references.

[Abstracter's note: Complete translation.]

Card 1/1

APPROVED FOR RELEASE: 06/15/2000 CIA-RDP86-00513R001240020014-7"

"APPROVED FOR RELEASE: 06/15/2000 CIA-RDP86-00513R001240020014-7

PEREVERZEV, D.A.

Calculating temperatures in a turbine disk cooled by heat elimination in fitting gaps of blade roots and from the disk blade. Trudy lab.gidr. mash. IN US R no.11:190-203 '64. (MIRA 17:10)

APPROVED FOR RELEASE: 06/15/2000 CIA-RDP86-00513R001240020014-7"

"APPROVED FOR RELEASE: 06/15/2000 CIA-RDP86-00513R001240020014-7

PEREVERZEV, D.A., inzh.

Effect of some errors in the study of the cooling efficiency of a steam turbine rotor using a heat model. Energomashinostroenie 10 no.11:17-20 N '64 (MIRA 18:2)

APPROVED FOR RELEASE: 06/15/2000 CIA-RDP86-00513R001240020014-7"

"APPROVED FOR RELEASE: 06/15/2000 CIA-RDP86-00513R001240020014-7

PEREVERZEV, D.A., inzh.; POVOLOTSKIY, L.V., inzh.

Study of the efficiency of a steam turbine rotor cooling system with supercritical parameters. Ebergomashinostroenie 9 no.4: 9-13 Ap '63. (MIRA 16:5)

(Steam turbines—Cooling)

APPROVED FOR RELEASE: 06/15/2000 CIA-RDP86-00513R001240020014-7"

"APPROVED FOR RELEASE: 06/15/2000 CIA-RDP86-00513R001240020014-7

L 19687-65 EWT(m)/EWP(w)/EWP(v)/EWP(k) Pr-4 AEDC(b)/AEDC(a)/SSD/AS(mp)-:
ASD(p)-3 EM

ACCESSION NR: AT4048337 S/2731/64/000/011/0190/0203

AUTHOR: Pereverzev, D.A.

TITLE: Calculating the temperature in a turbine disk cooled by removal of heat from the vane shaft clearances and from the disk blade

SOURCE: AN UkrSSR. Laboratoriya gidravlicheskikh mashin. Trudy*, no. 11, 1964, 190-203

TOPIC TAGS: turbine disk, vane shaft clearance, disk temperature, heat conduction, heat removal, turbine cooling.

ABSTRACT: An attempt has been made to calculate the turbine disk temperature, with the coefficient of heat exchange in the vane shaft clearances being less than 930 watts/m^2. deg. and taking the heat removal from the disk blade into account, by solution of a two-dimensional heat conduction problem. The "additional wall" method has been suggested for the solution of problems involving boundary value conditions of the third type. This calls for a substitution of internal thermal resistances for external ones, and a reduction to boundary conditions of the first type. The above method is applied to the heat-supply and heat-removal sides. The two methods of eliminating the heat from the vane shaft

Card 1/2

APPROVED FOR RELEASE: 06/15/2000 CIA-RDP86-00513R001240020014-7"

"APPROVED FOR RELEASE: 06/15/2000 CIA-RDP86-00513R001240020014-7

L 19687-65
ACCESSION NR: AT4048337

2

clearances are: a. blowing through all the clearances (12 outlets); b. blowing through only one upper and two lower clearances of the vane shaft connections (8 outlets). The resulting data can then be represented by a system of canonical equations and solved by the Gauss method. In an example of this approach, the temperature along the vane shaft axis was measured by the ETA (electrothermal analogy) method at the Institut Teploenergetiki AN UkrSSR (Institute of Thermal Power Engineering, AN Ukr. SSR). Although the ETA method has become very popular in recent years in the investigation of temperature fields, its use requires special equipment and hightly skilled personnel. Simple and fairly reliable analytical solutions may therefore be used in some cases to determine the required design of the turbine and to study its elements which must be cooled. Orig. art. has: 14 formulas, 3 tables and 4 figures.

ASSOCIATION: Laboratoriya gidravlicheskikh mashin, AN Ukr SSR (Laboratory of Hydraulic Machines, AN Ukr SSR)

SUBMITTED: 11Jun62 ENCL: 00 SUB CODE: PR, TD

NO REF SOV: 002 OTHER: 001

Card 2/2

APPROVED FOR RELEASE: 06/15/2000 CIA-RDP86-00513R001240020014-7"

"APPROVED FOR RELEASE: 06/15/2000 CIA-RDP86-00513R001240020014-7

L 14937-66 EWT(d)/EWT(1)/EWT(m)/EPF(n)-2/T IJP(c) WW/WE

ACC NR: AP5016680 SOURCE CODE: UR/0170/65/008/006/0725/0729

AUTHOR: Pereverzev, D. A.

ORG: Affiliate of the Institute of Mechanics, AN UkrSSR, Kharkov (Filial Instituta mekhaniki AN UkrSSR)

TITLE: Some stationary temperature fields in a semirestricted body with cylindrical heat sources

SOURCE: Inzhenerno-fizicheskiy zhurnal, v. 8, no. 6, 1965, 725-729

TOPIC TAGS: thermodynamics, heat theory, heat sink, heat source, THERMAL CONDUCTION

ABSTRACT: Equations are derived for calculating the stationary thermal conductivity in a semirestricted body with internal cylindrical heat sources of arbitrary form. It is assumed that infinite rows of identical strings of heat sources and heat sinks of constant density q are located in the plane of an unbounded body. The distance between rows is $2h_0$, the spacing between strings in a row is S (see figure). The temperatures of the strings of heat sources and heat sinks are $+\infty$ and $-\infty$ respectively. The strings are assumed to be the ends of open cylindrical surfaces whose

Card 1/2 UDC: 536.212 + 536.12

APPROVED FOR RELEASE: 06/15/2000 CIA-RDP86-00513R001240020014-7"

"APPROVED FOR RELEASE: 06/15/2000 CIA-RDP86-00513R001240020014-7

L 14937-66

ACC NR: AP5016680

generatrices are parallel to one another. The equation for the string $v=f(u)$ and its length l are given. The coefficient of thermal conductivity for the body λ is assumed to be constant. The isotherm coincident with the line of symmetry between the rows of strings is designated by t_p and the x-axis is located along this isotherm. The y-axis is passed through a pair of source - sink strings. An equation is derived for calculating the temperature field in a semirestricted body with internal cylindrical heat sources (or channels with a given surface temperature), whose ends are the contours of identical isotherms which are closed around the strings. Various channel contours may be produced by changing the shape of a string. The author considers cooling of a semirestricted body by a system of channels of this type (the region where $y > 0$). This equation may be extended to the general case where there are several rows of channels differing both with respect to the shape of the contour and the spacing between channels. The temperature field equations derived in this paper were used by the author to develop methods for calculating the temperatures in disc and drum rotors for heat turbines which are cooled by forcing the coolant through slot channels. These equations give results which agree satisfactorily with experimental data based on a thermal model of the rotor and the method of electrothermal analogy. Orig. art. has: 2 figures, 6 formulas.

SUB CODE: 20/ SUBM DATE: 28Jul64/ ORIG REF: 004/ OTH REF: 000

Card 2/2

APPROVED FOR RELEASE: 06/15/2000 CIA-RDP86-00513R001240020014-7"

"APPROVED FOR RELEASE: 06/15/2000 CIA-RDP86-00513R001240020014-7

[illegible], [illegible], [illegible]

Study of [illegible] temperature [illegible] [illegible] -35 F '65.

[illegible]

APPROVED FOR RELEASE: 06/15/2000 CIA-RDP86-00513R001240020014-7"

"APPROVED FOR RELEASE: 06/15/2000 CIA-RDP86-00513R001240020014-7

S/096/62/000/006/004/011
E114/E484

26.2124

AUTHOR: Pereverzev, D.A., Engineer

TITLE: Approximate solution of a two-dimensional problem in heat conductivity under steady state conditions and the application of this solution to determination of the effect of cooling on certain turbine parts

PERIODICAL: Teploenergetika, no.6, 1962, 24-31

TEXT: A semi-infinite body heated at the surface and possessing a row of uniform, circular, parallel cooling ducts at a uniform depth below the surface is first considered. The object is to calculate the temperature distribution when the temperatures at the surface of the body and in the bore of the cooling ducts are given, including the case of irregularly distributed ducts of any shape. Boundary conditions are introduced into a classical second order differential equation of heat conductivity and an expression is formulated for temperature t at any point M. Point sinks are substituted for the cooling ducts and corresponding mirror-image point sources are imagined to exist; the corresponding

Card 1/4

APPROVED FOR RELEASE: 06/15/2000 CIA-RDP86-00513R001240020014-7"

"APPROVED FOR RELEASE: 06/15/2000 CIA-RDP86-00513R001240020014-7

have a general analytical solution but can easily be solved for evenly distributed cooling ducts and permits calculation of the non-dimensional thermal resistance of the duct R_0. Numerical solutions of particular practical cases are discussed. In the case of circular ducts the equations are reduced to a system of linear algebraic equations in terms of thermal conductivity. The general equation for ducts of any cross-sectional shape is

$$\bar{t} = \frac{t - t_0}{t_r - t_0} = 1 - \sum_{i=1}^{m} \frac{1}{2R_{0i}} \ln \frac{\operatorname{ch} \frac{2\pi}{S}(h_{0i} + y) - \cos \frac{2\pi}{S}(x - x_{0i})}{\operatorname{ch} \frac{2\pi}{S}(h_{0i} - y) - \cos \frac{2\pi}{S}(x - x_{0i})}, \quad (14)$$

where suffix i refers to any point sink inside the boundaries of the duct. It follows that beyond certain depth below the ducts the temperature will remain very nearly constant and equal to temperature at infinity. The equations can be used to calculate a flat wall with one heat conducting surface and, less accurately, with both surfaces conducting. The target problem of temperature distribution when temperatures of the hot and the

APPROVED FOR RELEASE: 06/15/2000 CIA-RDP86-00513R001240020014-7"

"APPROVED FOR RELEASE: 06/15/2000 CIA-RDP86-00513R001240020014-7

PEREVERZEV, D.A., kand. tekhn. nauk; POVOLOTSKIY, L.V., inzh.; CHIRKIN, N.B., inzh.

Temperature field of a turbine rotor cooled by a steam blast through round channels in blade root. Energomashinostroenie 11 no.9:24-27 S '65. (MIRA 18:10)

APPROVED FOR RELEASE: 06/15/2000 CIA-RDP86-00513R001240020014-7"

"APPROVED FOR RELEASE: 06/15/2000 CIA-RDP86-00513R001240020014-7

PEREVERZEV, D.S.

Agrobiological study of a collection of corn in the Minusinsk Basin. Sbor. trud. asp. i mol. nauch. sotr. VIR no.5:61-72 '64. (MIRA 18:3)

APPROVED FOR RELEASE: 06/15/2000 CIA-RDP86-00513R001240020014-7"

"APPROVED FOR RELEASE: 06/15/2000 CIA-RDP86-00513R001240020014-7

PEREVERZEV, G. A.

27240. PEREVERZEV, G. A., MIRONOV, K. M. - Otechestvennyy dzhut. Kul'tura i obrabotka. Tekstil. Prom-st', 1949, No. 8, s. 4-5.

SO: Letopis' Zhurnal'nykh Statey, Vol. 36, 1949

APPROVED FOR RELEASE: 06/15/2000 CIA-RDP86-00513R001240020014-7"

"APPROVED FOR RELEASE: 06/15/2000 CIA-RDP86-00513R001240020014-7

PEREVERZEV, G. A.

PEREVERZEV, G. A. , MIRONOV, [illegible] - Otechestvennyy Dzhut. -- SM. [illegible]

SO: Letopis' Zhurnal'nykh Statey, Vol. 36, 1949.

APPROVED FOR RELEASE: 06/15/2000 CIA-RDP86-00513R001240020014-7"

"APPROVED FOR RELEASE: 06/15/2000 CIA-RDP86-00513R001240020014-7

PEREVERZEV, D.A.

Some steady-state temperature fields in a semilimited body with cylindrical heat sources. Inz. fiz. zhur. 8 no.6:72[illegible] Je '[illegible]. (MIRA 18:7)

1. Filial Instituta mekhaniki AN UkrSSR, Khar'kov.

APPROVED FOR RELEASE: 06/15/2000 CIA-RDP86-00513R001240020014-7"

"APPROVED FOR RELEASE: 06/15/2000 CIA-RDP86-00513R001240020014-7

PEREVERZEV, I.

Visual aid. Za rul. 14 no.5:18 Ag '56. (MLRA 10:1)
(Germany, East--Automobile drivers)

APPROVED FOR RELEASE: 06/15/2000 CIA-RDP86-00513R001240020014-7"

"APPROVED FOR RELEASE: 06/15/2000 CIA-RDP86-00513R001240020014-7

PEREVERZEV, I., master po remontu generatorov (Groznyy).

New panel for the APN-10 generator. Kinomekhanik no.9:35 S '53. (MLRA 6:9)

(Dynamos--Design and construction)

APPROVED FOR RELEASE: 06/15/2000 CIA-RDP86-00513R001240020014-7"

"APPROVED FOR RELEASE: 06/15/2000 CIA-RDP86-00513R001240020014-7

PER [illegible] kapitan [illegible] ranga

[illegible] shipboard anti-submarine weapons. Mor. sbor. 48 no.[illegible]: [illegible] (MIRA 13:[illegible])

APPROVED FOR RELEASE: 06/15/2000 CIA-RDP86-00513R001240020014-7"

"APPROVED FOR RELEASE: 06/15/2000 CIA-RDP86-00513R001240020014-7

PEREVERZEV, L.A.

24(0); 5(4); 6(2) PHASE I BOOK EXPLOITATION SOV/2215

Vsesoyuznyy nauchno-issledovatel'skiy institut metrologii imeni D.I. Mendeleyeva

Referaty nauchno-issledovatel'skikh rabot; sbornik No. 2 (Scientific Research Abstracts; Collection of Articles, Nr 2) Moscow, Standartgiz, 1958. 139 p. 1,000 copies printed.

Additional Sponsoring Agency: USSR. Komitet standartov, mer i izmeritel'nykh priborov.

Ed.: S. V. Reshetina; Tech. Ed.: N. A. Kondrat'yeva.

PURPOSE: These reports are intended for scientists, researchers, and engineers engaged in developing standards, measures, and gages for the various industries.

COVERAGE: The volume contains 128 reports on standards of measurement and control. The reports were prepared by scientists of institutes of the Komitet standartov, mer i izmeritel'nykh priborov pri Sovete Ministrov SSSR (Commission on Standards, Measures, and Measuring Instruments under the USSR Council of Ministers). The participating institutes are: VNIIM - Vsesoyuznyy nauchno-issledovatel'skiy metrologii imeni D.I. Mendeleyeva (All-Union Scientific Research Institute of Metrology imeni D.I. Mendeleyev) in Leningrad; Sverdlovsk branch of this institute; VNIIK - Vsesoyuznyy nauchno-issledovatel'skiy institut Komiteta standartov, mer i izmeritel'nykh priborov (All-Union Scientific Research Institute of the Commission on Standards, Measures, and Measuring Instruments), created from MGIMIP - Moskovskiy gosudarstvennyy institut mer i izmeritel'nykh priborov (Moscow State Institute of Measures and Measuring Instruments) October 1, 1955; VNIIFTRI - Vsesoyuznyy nauchno-issledovatel'skiy institut fiziko-tekhnicheskikh i radiotekhnicheskikh izmereniy (All-Union Scientific Research Institute of Physicotechnical and Radio-engineering Measurements) in Moscow; KhGIMIP - Khar'kovskiy gosudarstvennyy institut mer i izmeritel'nykh priborov (Khar'kov State Institute of Measures and Measuring Instruments); and NGIMIP - Novosibirskiy gosudarstvenyy institut mer i izmeritel'nykh priborov (Novosibirsk State Institute of Measures and Measuring Instruments). No personalities are mentioned. There are no references.

Strelkova, Ye.I., and T.B. Morozova (VNIIM). Studying Checking Methods for Absorption-type Attenuators With Attenuation to 30 db in the Three Centimeter Wave Range 125

Leykin, A.Ya, S.M. Okhotina, P.A. Shpan'on, and B.K. Karavashkin (KhGIMIP). Developing a Method for Checking GSS-6 Type Generators by a voltage to 1 microvolt and by the Factor of Modulation 128

Kshimovskiy, V.V. (VNIIM). Apparatus for Checking and Calibrating Generators of Undamped Electric Oscillations of Ultrahigh frequency 130

Otryashenkov, Yu.M., and A.A. Gordinskiy (VNIIFTRI). Developing a Method and Apparatus for Measuring Time-varying Parameters of Delay Lines 131

Osipov, L.I., and L.S. Neustroyev (VNIIFTRI). Developing Methods and Standard Apparatus for Measuring Time-varying Parameters of Pulses 131

Buzinov, V.S., and L.A. Pereverzev (VNIIFTRI). Developing Methods

Card 25/27

APPROVED FOR RELEASE: 06/15/2000 CIA-RDP86-00513R001240020014-7"

"APPROVED FOR RELEASE: 06/15/2000 CIA-RDP86-00513R001240020014-7

PEREVERZEV, L.A.

Spectrum of an oscillator generating pulses with steep fronts. Trudy inst. Kom. stand., mer i izm. prib. no.53:106-120 '61. (MIRA 15:2)

1. Vsesoyuznyy nauchno-issledovatel'skiy institut fiziko-tekhnicheskikh i radiotekhnicheskikh izmereniy, g. Moskva.
(Oscillators, Electron-tube)
(Pulse techniques (Electronics)

APPROVED FOR RELEASE: 06/15/2000 CIA-RDP86-00513R001240020014-7"

"APPROVED FOR RELEASE: 06/15/2000 CIA-RDP86-00513R001240020014-7

20528

S/115/61/000/001/006/007
B128/B201

6.4800

AUTHOR: Pereverzev, L. A.

TITLE: Testing of radio interference measuring instruments by means of pulses

PERIODICAL: Izmeritel'naya tekhnika, no. 1, 1961, 42-47

TEXT: The necessity of testing radio interference instruments by means of pulses instead of a sine-wave voltage of a given frequency is generally acknowledged. The author gives a mathematical description of the change of an input signal with a known frequency spectrum and phase response by means of a selective amplifier whose properties are also introduced into the calculation by the frequency response of the amplitude and the phase response. The measuring instruments studied here are regarded as such selective amplifiers. The former opinion that the voltage generated at the amplifier output is proportional to the product of the pulse amplitude at the amplifier input and the width of the frequency band of the selective amplifier, was found to be incorrect. If the measuring instrument is regarded as a selective amplifier with a sufficiently narrow transmission band so that the

Card 1/3 generator. ...ing into account the

APPROVED FOR RELEASE: 06/15/2000 CIA-RDP86-00513R001240020014-7"

"APPROVED FOR RELEASE: 06/15/2000 CIA-RDP86-00513R001240020014-7

20528

Testing of radio ...

S/115/61/000/001/006/007
B128/B201

Legend to Fig. 1: 1) spectral pulse density; 2) pulse repetition frequency.

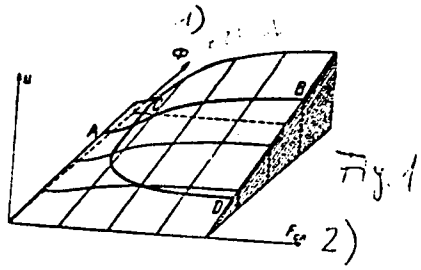

Fig. 1

Card 3/3

APPROVED FOR RELEASE: 06/15/2000 CIA-RDP86-00513R001240020014-7"

"APPROVED FOR RELEASE: 06/15/2000 CIA-RDP86-00513R001240020014-7

ACCESSION NR AT3013123 S/2589/62/000/065/0051/0060

AUTHOR Pereverzev, L. A.

TITLE Use of short radio pulses to check the impulse characteristic of noise meters

SOURCE USSR. Komitet standartov, mer i izmeritel'ny*kh priborov. Trudy* institutov Komiteta, no. 65, 1962, 51-60

TOPIC TAGS noise meter, impulse characteristic, video pulse, radio frequency pulse, short radio frequency pulse, pulse spectral density, differential attenuation, noise meter bandwidth, radio frequency pulse duration

ABSTRACT In view of the difficulties encountered when noise meters are checked with video pulses at frequencies above 20 Mcs, the author considers the use of short radio pulses for this purpose. A method and a test procedure are presented for measuring the spectral density of a short radio pulse. The largest and smallest permissible radio pulse durations are determined. It is shown that the determination of the absolute impulse characteristic of the noise meter reduces to

Card 1/12

APPROVED FOR RELEASE: 06/15/2000 CIA-RDP86-00513R001240020014-7"

"APPROVED FOR RELEASE: 06/15/2000 CIA-RDP86-00513R001240020014-7

ACCESSION NR AT3013123

a measurement of the frequency and a differential attenuation, which by the same token increases the accuracy. The errors in the measurement of the impulse characteristic are analyzed and the results of an experimental verification of a proposed procedure are presented. The use of short radio pulses is advantageous only when the noise meter has a sufficiently narrow band (relative bandwidth not exceeding tentatively 0.01). The spectrum of a short square radio pulse is sufficiently uniform in the pass band of the noise meter if the product of the pulse duration by the bandwidth (at the 0.5 level) amounts to approximately 0.1. A combined method using both short radio and video pulses is also described. The noise meter referred to was developed by the Filial NII Ministerstva svyazi (Branch of Scientific Research Institute of the Ministry of Communication). Orig. art. has 3 figures, 9 formulas, and 1 table.

ASSOCIATION	VNIIFTRI		
SUBMITTED	Jun61	DATE ACQ 28Oct63	ENCL 02
SUB CODE	EE	NO REF SOV 004	OTHER 000

Card 2/2

APPROVED FOR RELEASE: 06/15/2000 CIA-RDP86-00513R001240020014-7"

"APPROVED FOR RELEASE: 06/15/2000 CIA-RDP86-00513R001240020014-7

PEREVERZEV, L.A.

Use of narrow radio pulses for checking the pulse characteristics of interferometers. Trudy inst. Kom. stand., mer i izm. prib. no.65. 51-60 '62. (MIRA 16:5)

1. Vsesoyuznyy nauchno-issledovatel'skiy institut fiziko-tekhnicheskikh i radiotekhnicheskikh izmereniy.
(Interferometer) (Radio measurements)

APPROVED FOR RELEASE: 06/15/2000 CIA-RDP86-00513R001240020014-7"

"APPROVED FOR RELEASE: 06/15/2000 CIA-RDP86-00513R001240020014-7

PEREVERZEV, L.A.

Checking pulse characteristics of interference meters by means of short radio pulses. Izm.tekh. no.9:51-54 S '62. (MIRA 15:11)

(Pulse techniques (Electronics))

APPROVED FOR RELEASE: 06/15/2000 CIA-RDP86-00513R001240020014-7"

"APPROVED FOR RELEASE: 06/15/2000 CIA-RDP86-00513R001240020014-7

PEREVERZEV, L.A.

Pulse checking of radio-interference meters. Izm. tekh. no. 1:42-46 Ja '61. (MIRA 14:1)

(Radio--Interference--Measurement)

APPROVED FOR RELEASE: 06/15/2000 CIA-RDP86-00513R001240020014-7"

"APPROVED FOR RELEASE: 06/15/2000 CIA-RDP86-00513R001240020014-7

S/589/61/000/053/008/008
B104/B102

9.3280

AUTHOR: Pereverzev, L. A.

TITLE: Spectrum of an r-f pulse generator with steep leading front

SOURCE: USSR. Komitet standartov, mer i izmeritel'nykh priborov. Trudy institutov. Komiteta. no. 53 (113). 1961. Issledovaniya v oblasti radiotekhnicheskikh izmereniy, 106-120

TEXT: The spectrum of a pulse generator for the testing of radio-noise measuring instruments was calculated. The control grid modulation (Fig. 3) was examined. In the modulation with an unsymmetric circuit the background component of the spectrum is considerable. This component is reduced by using a symmetric circuit. The anode current spectrum was examined under constant shift of the control grid and with blocked tube. The effect of the anode current front time was taken into account and its optimum value, taking account of the possible errors, was determined. For the spectral density, Φ_i, of the anode current one obtains, by neglecting the deficiencies of the symmetric modulation circuit (Fig. 10),

Card 1/2

APPROVED FOR RELEASE: 06/15/2000 CIA-RDP86-00513R001240020014-7

"APPROVED FOR RELEASE: 06/15/2000 CIA-RDP86-00513R001240020014-7

ANTSYFEROV, M.S., kand.fiziko-matematicheskikh nauk; KAZAMANOV, Yu.G., inzh.; KACHANOVA, N.S.; PEREVERZEV, L.B.

ShShG-1 and ShShG-2 mine geophones for use in boreholes. Nauch. soob. IGD 17:135-140 '62. (MIRA 16:7)

(Geophone)

APPROVED FOR RELEASE: 06/15/2000 CIA-RDP86-00513R001240020014-7"

"APPROVED FOR RELEASE: 06/15/2000 CIA-RDP86-00513R001240020014-7

PEREVERZEV, L.B.

L 10425-66 EWT(1)/EWA(h) GW

AM5023902

BOOK EXPLOITATION

UR/
534.647:622

Akademiya nauk SSSR. Institut gornogo dela

The use of seismoacoustic methods in mining (Primeneniye seysmoakusticheskikh metodov v gornom dele) Ed. by M. S. Antsyferov. Moscow, Izd-vo "Nauka," 1964. 186 p. illus. Errata printed on the back cover. 1300 copies printed.

TOPIC TAGS: mining engineering, seismic prospecting, seismic instrument, phonon acoustics, seismoacoustic pulse

PURPOSE AND COVERAGE: This is a collection of articles summarizing the results of work done by the Laboratory of Geophysical Research of the Mining Institute imeni A. A. Skochinskiy and the Scientific Seismoacoustic Station of the Donetskiy Sovnarkhoz. The research was basically conducted at the coal mines of the Donet Basin, where dangerous sudden outbursts of coal and gas occur. The authors give data on the design and manufacture of various seismoacoustic instruments, used in both laboratory and field investigations. Results of these investigations are analyzed, emphasizing their

Card 1/5

APPROVED FOR RELEASE: 06/15/2000 CIA-RDP86-00513R001240020014-7"

"APPROVED FOR RELEASE: 06/15/2000 CIA-RDP86-00513R001240020014-7

L 10425-66
AM5023902

12

importance for the theory of dynamic phenomena in mines and for the prognosis of the danger zones of possible sudden outbursts. The book is of interest to miners and geophysicists concerned with the application of geophysical methods in coal and ore mines.

TABLE OF CONTENTS:

Antsyferov, M. S. 44,55 Basic applications of seismoacoustics in coal mines, with the hazard of sudden outbusts of coal and gas -- 3

Antsyferov, M. S. SED-type electrodynamic geophones -- 18

Paravarzev, L. B. 44,55 Pulse method of automatic calibration of electrodynamic vibrometers -- 43

Antsyferov M. S. Simplest piezoelectric geophone-accelerometers for laboratory geophysical investigations -- 47

Antsyferov, M. S., V. S. Ivanov, 44,55 and L. N. Shevchenko. 44,55 Phonometric - search for boreholes in mines -- 54

Card 2/5

APPROVED FOR RELEASE: 06/15/2000 CIA-RDP86-00513R001240020014-7"

"APPROVED FOR RELEASE: 06/15/2000 CIA-RDP86-00513R001240020014-7

L 10425-66

AM5023902

3

Antsyferov, M. S., and L. B. Pereverzev. ZUA-2 VCh-type seismo-acoustic apparatus -- 65

Makarov, V. M. Automatic recorder of natural seismoacoustic pulses -- 72 44/55

Antsyferov, M. S., and P. F. Nikitchenko. Two-frame galvanometer in the modulator of an amplifier of very low frequencies -- 78

Ivanov, V. S. Seismoacoustic determination of the boundaries of zones in a coal bed where there is the danger of outbursts -- 84

Antsyferov, N. S. Possibilities of the statistical method of analyzing the data on the seismoacoustic regime of coal beds where there is the danger of outbursts -- 92

Motsar', Yu. V. Current and advance forecasting of zones at coal mines where there is the danger of outbursts -- 102

Boyko, G. K. Relation between the rack-pressure pattern and the

Card 3/5

APPROVED FOR RELEASE: 06/15/2000 CIA-RDP86-00513R001240020014-7"

"APPROVED FOR RELEASE: 06/15/2000 CIA-RDP86-00513R001240020014-7

L 10425-66

AM5023902

nature of the seismoacoustic regime of a coal bed -- 107

Parshikov, N. B. Determining the zone of the generation of elastic pulses in the movement of stope of a pitching bed -- 114

Kagan, Ya. Ya., and I. M. Lavrov. Investigating the location of the foci of seismoacoustic pulses in a coal bed -- 117

Ivanov, V. S., and N. B. Parshikov. Seismoacoustic method of determining the efficiency of preventive measures against sudden outbursts of coal and gas -- 126

Mysina, L. G. Effect of advancing boreholes on the noise level and the stress state in the borehole zone of a stope -- 133

Mirer, S. V. Determining the zone of discharge of uprise drainage holes by the seismoacoustic method -- 138

Ivanov, G. M. Comparative analysis of natural seismoacoustic pulses and the pulses caused by mining operations -- 144

Card 4/5

APPROVED FOR RELEASE: 06/15/2000 CIA-RDP86-00513R001240020014-7"

"APPROVED FOR RELEASE: 06/15/2000 CIA-RDP86-00513R001240020014-7

L 10425-66

AM5023902

12

Konstantinova, A. G.,[44,55] L. G. Mysina,[44,55] and V. S. Ivanov. Analysis of energy generated by seismoacoustic processes resulting from sudden outbursts of coal and gas -- 150

Konstantinova, A. G., and L. G. Mysina. Relative changes in the parameters of elastic pulses before sudden outbursts of coal and gas -- 154

Konstantinova, A. G. Investigation of the parameters of elastic vibrations generated in the rock samples under a uniaxial load -- 165

Konstantinova, A. G., and E. V. Petrosyants.[44,55] Seismoacoustic method of investigating the effect of an explosion on the roof of a mine -- 173 [44,55]

Antsyferov, M. S. Electroseismic effect in rocks -- 180

SUB CODE: GO, ES, GP/ SUBMITTED: 26Nov64 NO REF SOV: 113

OTHER: 005

Card 5/5

APPROVED FOR RELEASE: 06/15/2000 CIA-RDP86-00513R001240020014-7"

"APPROVED FOR RELEASE: 06/15/2000 CIA-RDP86-00513R001240020014-7

ANTSYFEROV, Mikhail Sergeyevich; KONSTANTINOVA, Aleksandra Georgiyevna; PEREVERZEV, Leonid Borisovich. Prinimal uchastiye IVANOV, V.S. SKOCHINSKIY, A.A., akademik, otv.red.; GRIGOR'YEV, Ye.N., red. izd-va; SIMKINA, G.S., tekhn.red.

[Seismoacoustic investigations in coal mines] Seismoakusticheskie issledovaniia v ugol'nykh shakhtakh. Moskva, Izd-vo Akad.nauk SSSR, 1960. 103 p. (MIRA 13:11)
(Coal mines and mining--Accidents) (Seismometry)

APPROVED FOR RELEASE: 06/15/2000 CIA-RDP86-00513R001240020014-7"

"APPROVED FOR RELEASE: 06/15/2000 CIA-RDP86-00513R001240020014-7

ANTSYFEROV, M.S.; PEREVERZEV, L.B.

Seismoacoustic apparatus for recording and studying warning signs of sudden outbursts of coal and gas. Trudy Geofiz.inst.no.34:208-242 '56. (MLRA 10:2)

(Mine explosions) (Geophone)
(Coal mines and mining--Safety measures)

APPROVED FOR RELEASE: 06/15/2000 CIA-RDP86-00513R001240020014-7"

"APPROVED FOR RELEASE: 06/15/2000 CIA-RDP86-00513R001240020014-7

PEREVERZEV, M.P., gornyy inzh.

Stability of roof exposures in the shortworkings of Kuznetsk Basin flat coal seams. Ugol' 36 no.7:8-11 Jl '61. (MIRA 15:2)

1. Moskovskiy gornyy institut im. I.V.Stalina.
(Kuznetsk Basin--Coal mines and mining)

APPROVED FOR RELEASE: 06/15/2000 CIA-RDP86-00513R001240020014-7"

"APPROVED FOR RELEASE: 06/15/2000 CIA-RDP86-00513R001240020014-7

NOVITSKIY, V.V., inzh.; PEREVERZEV, M.P., inzh.

Control of a difficult-to-cave roof at the "Sukhodol'skaia" No.1 mine, Bezop.truda v prom. 7 no.7:20-21 Jl '63. (MIRA 16:9)
(Donets Basin--Coal mines and mining)

APPROVED FOR RELEASE: 06/15/2000 CIA-RDP86-00513R001240020014-7"

"APPROVED FOR RELEASE: 06/15/2000 CIA-RDP86-00513R001240020014-7

KARACHENTSEV, V.I.; PEREVERZEV, M.P.; BELOV, V.B.

Mining methods used in the hydraulic mines of the Donets Basin. Ugol' 37 no.6:34-36 Je '62. (MIRA 15:7)

1. Ukrainskiy nauchno-issledovatel'skiy institut gidrodobychi uglya.

(Donets Basin—Hydraulic mining)

APPROVED FOR RELEASE: 06/15/2000 CIA-RDP86-00513R001240020014-7"

"APPROVED FOR RELEASE: 06/15/2000 CIA-RDP86-00513R001240020014-7

MUSLIN, K.E.; PEREVERZEV, M.P.; NOVITSKIY, V.V.; GRITSENKO, V.G.

Improving rock pressure control in mining steeply dipping seams under conditions of the Yanovka hydraulic mine. Ugol' Ukr. 6 no.6:13-15 Je '62. (MIRA 15:7)

1. Ukrainskiy nauchno-issledovatel'skiy institut gidrodobychi uglya.

(Donets Basin--Hydraulic mining)
(Rock pressure)

APPROVED FOR RELEASE: 06/15/2000 CIA-RDP86-00513R001240020014-7"

"APPROVED FOR RELEASE: 06/15/2000 CIA-RDP86-00513R001240020014-7

PEREVERZEV, M.P., inzh.; NOVITSKIY, V.V., inzh.; GRITSENKO, V.G., inzh.

Rock pressure manifestations in the development of steeply dipping seams in the "Yanovka" hydraulic mine. Ugol'.prom. no.4:35-38 Jl-Ag '62. (MIRA 15:8)

1. Ukrainskiy nauchno-issledovatel'skiy institut gidrodobychi uglya.
(Donets Basin--Hydraulic mining) (Rock pressure)

APPROVED FOR RELEASE: 06/15/2000 CIA-RDP86-00513R001240020014-7"

"APPROVED FOR RELEASE: 06/15/2000 CIA-RDP86-00513R001240020014-7

PEREVERZEV, M.P., gornyy inzh.

Methodology of mine observations of the nature of rock pressure manifestations in working flat coal seams by the chamber and the chamber and pillar systems. Nauch. trudy MGI no.38:105-118 '61. (MIRA 15:10)

(Coal mines and mining) (Rock pressure)

APPROVED FOR RELEASE: 06/15/2000 CIA-RDP86-00513R001240020014-7"

"APPROVED FOR RELEASE: 06/15/2000 CIA-RDP86-00513R001240020014-7

KARACHENTSEV, V.I., gornyy inzh.; PEREVERZEV, M.P., kand. tekhn. nauk; DOLGOV, L.T., gornyy inzh.; SHEVCHENKO, V.F.

Hydraulic filling of the mined-out area in one way to improve the working of steep seams in the Donets Basin. Ugol' 38 no.6: 11-13 Je '63. (MIRA 16:8)

1. Ukrainskiy nauchno-issledovatel'skiy institut gidrodobychi uglya.
(Donets Basin—Mine filling)
(Hydraulic conveying)

APPROVED FOR RELEASE: 06/15/2000 CIA-RDP86-00513R001240020014-7"

"APPROVED FOR RELEASE: 06/15/2000 CIA-RDP86-00513R001240020014-7

BUTKEVICH, R.V., kand.tekhn.nauk; BRAYTSEV, A.V., kand.tekhn.nauk; BAYKOV, M.A., kand.tekhn.nauk; PEREVERZEV, M.P., inzh.; SINAYSKIY, V.P., inzh.

Using short working faces in medium-thick flat seams in the Kuznetsk Basin. Nauch. soob. IGD 17:64-71 '62. (MIRA 16:7)
(Kuznetsk Basin--Coal mines and mining)

APPROVED FOR RELEASE: 06/15/2000 CIA-RDP86-00513R001240020014-7"

"APPROVED FOR RELEASE: 06/15/2000 CIA-RDP86-00513R001240020014-7

PEREVERZEV, M.P., gornyy inzh.

Manifestations of rock pressure in short working faces with anchor bolting. Nauch. trudy MGI no.38:181-189 '61. (MIRA 15:10)
(Kuznetsk Basin--Mine roof bolting) (Rock pressure)

APPROVED FOR RELEASE: 06/15/2000 CIA-RDP86-00513R001240020014-7"

"APPROVED FOR RELEASE: 06/15/2000 CIA-RDP86-00513R001240020014-7

PEREVERZEV, M.P., kand. tekhn. nauk; KARACHENTSEV, V.I., gornyy inzh.; DUDENKO, I.I., gornyy inzh.

Improving the technology of rock disposal in Donets Basin mines by means of hydromechanization. Ugol' Ukr. 10 no. 1:15-16 Ja '66. (MIRA 18:12)

1. Ukrainskiy nauchno-issledovatel'skiy institut gidravlicheskoy dobychi uglya.

APPROVED FOR RELEASE: 06/15/2000 CIA-RDP86-00513R001240020014-7"

"APPROVED FOR RELEASE: 06/15/2000 CIA-RDP86-00513R001240020014-7

PEREVERZEV, M. P., CAND TECH SCI, "INVESTIGATIONS OF ~~THE~~ MANIFESTATIONS OF MINE PRESSURE IN WORKING GENTLY SLOPING COAL BEDS OF ~~AVERAGE~~ KUZBASS ~~HEIGHT USING THE~~ SYSTEMS ~~OF~~ SHORT STOPES." MOSCOW, 1961. (INST OF MINING ~~INDUSTRY~~ IMENI A. A. SKOCHINSKIY). (KL-DV, 11-61, 221).

APPROVED FOR RELEASE: 06/15/2000 CIA-RDP86-00513R001240020014-7"

"APPROVED FOR RELEASE: 06/15/2000 CIA-RDP86-00513R001240020014-7

BUTKEVICH, Roman Veniaminovich; BRAYTSEV, Andrey Vasil'yevich; BAYKOV, Mikhail Aleksandrovich; SINAYSKIY, Viktor Pavlovich; PEREVERZEV, Karel' Petrovich; VESKOV, M.I., otv. red.

[Experience in short face mining of medium thickness flat seams] Opyt razrabotki pologikh plastov srednei moshchnosti korotkimi zaboiami. Moskva, TSentr. in-t tekhn. informatsii ugol'noi promyshl., 1962. 78 p. (MIRA 17:7)

APPROVED FOR RELEASE: 06/15/2000 CIA-RDP86-00513R001240020014-7"

"APPROVED FOR RELEASE: 06/15/2000 CIA-RDP86-00513R001240020014-7

PEREVERZEV, M.S., inzh. (stantsiya Sinel'nokovo).

Experience in eliminating flange cutting in FD steam locomotive wheel pairs. Zhel. dor. transp. 41 no.2:83 F '59. (MIRA 12:3)

1.Zamestitel' nachal'nika parovoznogo depo.
(Car wheels--Maintenance and repair)

APPROVED FOR RELEASE: 06/15/2000 CIA-RDP86-00513R001240020014-7"

"APPROVED FOR RELEASE: 06/15/2000 CIA-RDP86-00513R001240020014-7

PEREVERZEV, N.A.

Use of traveling electron microscope with an X-ray micro-analyzer in biology. Vop. virus. 10 no.5:610-612 S-O '65. (MIRA 18:11)

1. Institut epidemiologii i mikrobiologii imeni N.F.Gamalei AMN SSSR, Moskva.

APPROVED FOR RELEASE: 06/15/2000 CIA-RDP86-00513R001240020014-7"

"APPROVED FOR RELEASE: 06/15/2000 CIA-RDP86-00513R001240020014-7

SHAFRANOVSKIY, Sergey Aleksandrovich, inzhener; PEREVERZEV, Nikolay Zakharovich, inzhener; KOROLEV, Nikolay Ivanovich, inzhener; VOLODIN, A.I., kandidat tekhnicheskikh nauk, redaktor; YEGUNOV, P.N., inzhener, redaktor; VERINA, G.P., tekhnicheskiy redaktor.

[Diesel locomotives; design, calculations and repairs] Teplovozy; konstruktsiia, raschety i remont. Izd.2-e, perer. Moskva, Gos. transportnoe zhel-dor. izd-vo, 1955. 555 p. (MLRA 8:8)
(Diesel locomotives)

APPROVED FOR RELEASE: 06/15/2000 CIA-RDP86-00513R001240020014-7"

"APPROVED FOR RELEASE: 06/15/2000 CIA-RDP86-00513R001240020014-7

S/048/62/026/011/004/021
B125/B102

24.7700

AUTHORS: Spivak, G. V., Saparin, G. V., and Pereverzev, N. A.

TITLE: The potential distribution found in a p-n junction by means of an electron-optical raster system

PERIODICAL: Akademiya nauk SSSR. Izvestiya. Seriya fizicheskaya, v. 26, no. 11, 1962, 1339-1342

TEXT: The authors discuss the possibility of visualizing the junction and of quantitatively measuring the range of the potential in p-n junctions of germanium and silicon single crystals directly and quickly, using an electron beam that scans over the surface. The method is based on the following assumptions: (1) The radius of the scanning beam has to be smaller than the width of the p-n junction; (2) the potential drop in the junction must be greater than the mean energy of the secondary electrons. The accuracy of the method in weak fields can be improved by reducing the electron energy and when the radius of the electron probe is reduced, the method can be applied to measuring potentials of thin junctions. The width of the junction can also be determined by varying the blocking

Card 1/8

APPROVED FOR RELEASE: 06/15/2000 CIA-RDP86-00513R001240020014-7"

"APPROVED FOR RELEASE: 06/15/2000 CIA-RDP86-00513R001240020014-7

APPROVED FOR RELEASE: 06/15/2000 CIA-RDP86-00513R001240020014-7"

"APPROVED FOR RELEASE: 06/15/2000 CIA-RDP86-00513R001240020014-7

SHAFRANOVSKIY, Sergey Aleksandrovich; [illegible], Nikolay Zakharovich; [illegible], Nikolay Ivanovich [deceased]; KOZ'MICH, Vadim Dmitriyevich; [illegible], N.F., kand. tekhn. nauk, red.

[Diesel locomotives] Teplovozy. Ch.3., dop. i perer. [by] S.A.Shafranovskii i dr. Moskva, Transport, 1964. 334 p. (MIRA 18:2)

APPROVED FOR RELEASE: 06/15/2000 CIA-RDP86-00513R001240020014-7"

"APPROVED FOR RELEASE: 06/15/2000 CIA-RDP86-00513R001240020014-7

PEREVERZEV, P.

Training the man of the future. Sov. shakht. 11 no.3:22-24 Mr '62. (MIRA 15:5)

1. Predsedatel' Chistyakovskogo rayonnogo komiteta profsoyuza v Donbasse.
(Coal miners) (Trade unions)

APPROVED FOR RELEASE: 06/15/2000 CIA-RDP86-00513R001240020014-7"

"APPROVED FOR RELEASE: 06/15/2000 CIA-RDP86-00513R001240020014-7

PEREVERZEV, P.M.

PEREVERZEV, Petr Mikhaylovich; MORSHCHIKOV, V.D., red.; GOLICHENKOVA, A.A., tekhn.red.

[Schools of progressive experience] Shkoly peredovogo opyta. [Moskva] Izd-vo VTsSPS, 1957. 60 p. (MIRA 11:3)

1. Predsedatel' Chistyakovskogo raykoma profsoyuza rabochikh ugol'noy promyshlennosti.
(Donets Basin—Coal mines and mining)

APPROVED FOR RELEASE: 06/15/2000 CIA-RDP86-00513R001240020014-7"

"APPROVED FOR RELEASE: 06/15/2000 CIA-RDP86-00513R001240020014-7

BARANOV, V.; PEREVEREEV, S.

Pumping Machinery

Impeller pump assembly VP-24, Khlopkovodstvo No. 1, 1952.

9. Monthly List of Russian Accessions, Library of Congress, September 1952 1953, Uncl.

APPROVED FOR RELEASE: 06/15/2000 CIA-RDP86-00513R001240020014-7"

"APPROVED FOR RELEASE: 06/15/2000 CIA-RDP86-00513R001240020014-7

TYULENEV, A.M.; BUZUNOV, I.A.; ASKAROV, A.A., kand. tekhn. nauk; OSTANKOV, A.G., kand. tekhn. nauk; IVANOV, A.I., kand. tekhn. nauk [deceased]; KHORST, G.O., kand. tekhn. nauk; BUTYRIN, M.V., kand. tekhn. nauk; PEREVERZEV, S.K., kand. tekhn. nauk; KRIVONOSOVA, N.A., red.

[Manual for irrigation engineers] Spravochnik gidrotekhnika-irrigatora. Tashkent, Uzbekistan. Pt.2. 1964, 328 p. (MIRA 18:10)

APPROVED FOR RELEASE: 06/15/2000 CIA-RDP86-00513R001240020014-7"

"APPROVED FOR RELEASE: 06/15/2000 CIA-RDP86-00513R001240020014-7

PEREVERZEV, S. K.

2'47' Gorizontalvnyy propellernyy nasosnyy agregat ps-3 . Gidrotekhnika I meliorat iya, 1949, No. 2. c. 61-64

SO: LETOPIS' NO. 35, 1949

APPROVED FOR RELEASE: 06/15/2000 CIA-RDP86-00513R001240020014-7"

"APPROVED FOR RELEASE: 06/15/2000 CIA-RDP86-00513R001240020014-7

PEREVERZEV, S.K.

Simplified method for starting the PG-35M, PG-35 x 2, and PG-50 pumping units designed by the Central Asian Research Institute of Irrigation. Trudy TIIIMSKH no.8:189-193 '57. (MIRA 15:5)

(Pumping machinery)

APPROVED FOR RELEASE: 06/15/2000 CIA-RDP86-00513R001240020014-7"