"APPROVED FOR RELEASE: 06/15/2000 CIA-RDP86-00513R001240020015-6

PEREVERZEV, S. K.

Gorizontal'nyy propellernyy nasosnyy agregat PG-35.--sm. 26476

SHKUNDIN, B. M.

Vybor pluvuchikh zemlesosnykh snaryadov.--sm. 26613

APPROVED FOR RELEASE: 06/15/2000 CIA-RDP86-00513R001240020015-6"

"APPROVED FOR RELEASE: 06/15/2000 CIA-RDP86-00513R001240020015-6

BARANOV, V. A.; PEREVERZEV, S. K.

Standardizing the operation of irrigation pumps having small capacity. Vop. gidr. no.5:80-95 '62. (MIRA 15:10)

(Uzbekistan—Pumping machinery)

APPROVED FOR RELEASE: 06/15/2000 CIA-RDP86-00513R001240020015-6"

"APPROVED FOR RELEASE: 06/15/2000 CIA-RDP86-00513R001240020015-6

PEREVERZEV, S. K.

VP-8 pumps for use in boreholes. Vop. gidr. no.5:96-98 '62. (MIRA 15:10)

(Uzbekistan—Pumping machinery)

APPROVED FOR RELEASE: 06/15/2000 CIA-RDP86-00513R001240020015-6"

"APPROVED FOR RELEASE: 06/15/2000 CIA-RDP86-00513R001240020015-6

SOV/124-58-8-8826

Translation from: Referativnyy zhurnal, Mekhanika, 1958, Nr 8, p 70 (USSR)

AUTHORS: Pereverzev, S.K., Mashkov, V.N.

TITLE: Water-lifting Equipment for Use in Pastures (Vodopod"yemniki dlya pastbishch)

PERIODICAL: Tr. Sredneaz. n.-i. in-ta irrigatsii, 1957, Nr 81, pp 57-65

ABSTRACT: Results are given of comparative tests made of four types of water-lifting equipment (horse-driven and operated by electric motor) installed on wells of different depths.

M.A. Peshkin

Card 1/1

APPROVED FOR RELEASE: 06/15/2000 CIA-RDP86-00513R001240020015-6"

"APPROVED FOR RELEASE: 06/15/2000 CIA-RDP86-00513R001240020015-6

DOBRUSKIN, L.; PLENKIN, F.; PEREVEREZEV, V., redaktor; LAVRENT'YEVA, V., tekhnicheskiy redaktor.

[Display of great Communist construction works in museums of local lore] Pokaz velikikh stroek kommunizma v kraevedcheskikh muzeiakh. Moskva, Gos. izd-vo kul'turno-prosvetitel'noi lit-ry, 1952. 101 p. (MLRA 7:12)

(Museums) (Hydraulic engineering)

APPROVED FOR RELEASE: 06/15/2000 CIA-RDP86-00513R001240020015-6"

"APPROVED FOR RELEASE: 06/15/2000 CIA-RDP86-00513R001240020015-6

PEREVERZEV, V.

Love for one's profession. Grazhd. av. 13 no.3:6-7 Mr '56.
(Ushakova, Nadezhda Dmitrievna) (MLRA 9:7)

APPROVED FOR RELEASE: 06/15/2000 CIA-RDP86-00513R001240020015-6"

"APPROVED FOR RELEASE: 06/15/2000 CIA-RDP86-00513R001240020015-6

PEREVERZEV, V I.

Experiments for the study of Ohm's law. Fiz. v shkole 13 no.4:57-60 Jl-Ag '53. (MLRA 6:6)

1. 157aya srednyaya shkola (Leningrad). (Ohm's law)

APPROVED FOR RELEASE: 06/15/2000 CIA-RDP86-00513R001240020015-6"

"APPROVED FOR RELEASE: 06/15/2000 CIA-RDP86-00513R001240020015-6

PEREVERZEV, V.K.

AID Nr. 983-15 5 June

ELECTRON-BEAM VAPOR DEPOSITION (USSR)

Pereverzev, V. K. IN; Akademiya nauk SSSR. Institut metallurgii. Trudy, no. 11, 1962, 209-220. S/509/62/000/011/016/019

The Electrophysical Laboratory of the Institute of Metallurgy, Academy of Sciences USSR, has designed and built an electron-beam unit for vacuum vapor deposition of thin films. At present, the vacuum system of the unit can create a vacuum as deep as 10^{-6} to 10^{-7} mm Hg. The vacuum system will be further improved by the addition of an ion sorbtion pump, which will produce a vacuum as deep as 10^{-8} to 10^{-9} mm Hg. The vacuum chamber of the

Card 1/3

APPROVED FOR RELEASE: 06/15/2000 CIA-RDP86-00513R001240020015-6"

"APPROVED FOR RELEASE: 06/15/2000 CIA-RDP86-00513R001240020015-6

AID Nr. 983-15 5 June

ELECTRON-BEAM VAPOR DEPOSITION [Cont'd]

S/509/63/000/011/016/019

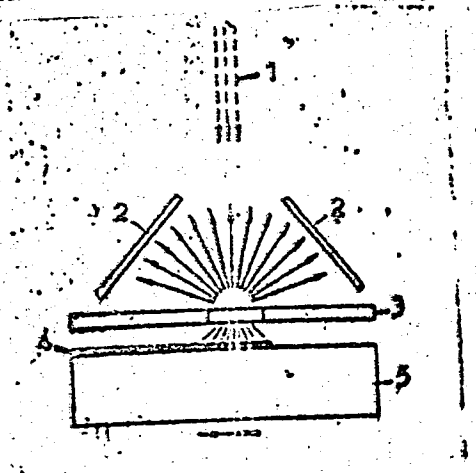

1 - electron gun; 2 - substrates; 3 - evaporated material; 4 - heavier films; 5 - substrates.

unit is equipped with a vorchamber which permits charging and discharging without disrupting the vacuum. The electron guns operate with an accelerating voltage of 50 kv. A separate electron gun with a ring-shaped cathode is used to preheat high-resistivity semiconductors. Substrates (2) on which the films are deposited may be placed between the electron gun and the evaporated material [see figure]. This arrangement is used to deposit thin films. For heavier films the substrate (5) can be placed under the evaporated material. The unit is provided with numerous control attachments, e.g., an attachment for measuring the film resistivity during

Card 2/3

APPROVED FOR RELEASE: 06/15/2000 CIA-RDP86-00513R001240020015-6"

"APPROVED FOR RELEASE: 06/15/2000 CIA-RDP86-00513R001240020015-6

AID Nr. 983-15 5 June

ELECTRON-BEAM VAPOR DEPOSITION [Cont'd] S/509/63/000/011/016/019

the deposition, an electron diffraction camera; an "electron mirror" for visual observation of the distribution of potentials on the surface of semiconductor films, and an attachment for measuring the Hall effect in films. Since it was built in 1959, the unit has been used in studies of film deposition in thicknesses of several hundredths of a μ to several μ. Al, Cu, W, Mo, Ta, permalloy, CdS, PbO, and glass films were successfully deposited. [DV]

Card 3/3

APPROVED FOR RELEASE: 06/15/2000 CIA-RDP86-00513R001240020015-6"

"APPROVED FOR RELEASE: 06/15/2000 CIA-RDP86-00513R001240020015-6

PEREVERZEV, V.K.

Application of coatings in vacuum with use of electron bombardment. Trudy Inst. met. no.11:208-220 '62. (MIRA 16:5)
(Vapor plating) (Vacuum technology)

APPROVED FOR RELEASE: 06/15/2000 CIA-RDP86-00513R001240020015-6"

"APPROVED FOR RELEASE: 06/15/2000 CIA-RDP86-00513R001240020015-6

PEREVERZEV, V.K.

KRNYAK, Rudol'f; DAN'KO, Yu.T., inzhener [translator]; PEREVERZEV, V.K., kandidat tekhnicheskikh nauk, redaktor; KORNILOVA, M.I., redaktor; KIRSANOVA, N.A., tekhnicheskiy redaktor.

[Metal spraying reconditioning of worn out machine parts and protection of surfaces from corrosion by means of metal spraying] Metallizatsiia raspyleniem; vosstanovlenie iznoshennykh detalei mashin i zashchita poverkhnostei ot korrozii pytem napyleniia metalla. [Moskva] Izd-vo VTsSPS Profizdat, 1956. 173 p. (MIRA 10:4)
(Metal spraying)

APPROVED FOR RELEASE: 06/15/2000 CIA-RDP86-00513R001240020015-6"

"APPROVED FOR RELEASE: 06/15/2000 CIA-RDP86-00513R001240020015-6

ZHUKOVSKIY, S.R.; PEREVERZEV, V.K.

High-speed cinematography as a method for the investigation of metal coating formation. Usp.nauch.fot. 6:175-179 '59. (MIRA 13:6)

(Metal spraying) (Motion pictures in industry)

APPROVED FOR RELEASE: 06/15/2000 CIA-RDP86-00513R001240020015-6"

"APPROVED FOR RELEASE: 06/15/2000 CIA-RDP86-00513R001240020015-6

PEREVERZEV, V.M.

Determining the source of electromotive force by compensation method. Fiz.v shkole 22 no.1:71 Ja-F '62. (MIRA 15:3)

1. Medvenskaya sredyaya shkola Kurskoy oblasti.
(Electromotive force)

APPROVED FOR RELEASE: 06/15/2000 CIA-RDP86-00513R001240020015-6"

"APPROVED FOR RELEASE: 06/15/2000 CIA-RDP86-00513R001240020015-6

BELOV, N.P.; LEVINA, V.I.; ZHUKOVA, R.A.; ROYZIN, M.B.; PEREVERZEV, V.N.; MANAKOV, K.N.; BARANOVSKAYA, A.V., kand. geol.-miner., red.; ZAMOTKIN, N.Ya., red.; CHEREVATYY, P.P., tekhn. red.

[Soils of Murmansk Province and the improvement of their fertility] Pochvy Murmanskoi oblasti i povyshenie ikh plodorodiia. [By] N.P.Belov i dr. Kirovsk, Izd-vo "Kirovskii rabochii," 1963. 117 p. (MIRA 17:3)

APPROVED FOR RELEASE: 06/15/2000 CIA-RDP86-00513R001240020015-6"

"APPROVED FOR RELEASE: 06/15/2000 CIA-RDP86-00513R001240020015-6

PEREVERZEV, V.N.; ALEKSEYEVA, N.S.

Absorption of phosphorus by bog soils in Murmansk Province. Pochvovedenie no.11:61-65 N '65. (MIRA 18:12)

1. Polyarno-al'piyskiy botanicheskiy sad, Kol'skiy filial AN SSSR. Submitted Jan, 14. 1963.

APPROVED FOR RELEASE: 06/15/2000 CIA-RDP86-00513R001240020015-6"

"APPROVED FOR RELEASE: 06/15/2000 CIA-RDP86-00513R001240020015-6

PEREVERZEV, V.N.

Effect of cultivation on the transformation of the chemical composition and agrochemical characteristics of bog soils in Murmansk Province. Pochvovedenie no.5:41-52 My '63. (MIRA 16:5)

1. Kol'skiy filial Akademii nauk SSSR imeni S.M.Kirova i Polyarno-al'piyskiy botanicheskiy sad.
(Murmansk Province—Soils—Composition)

APPROVED FOR RELEASE: 06/15/2000 CIA-RDP86-00513R001240020015-6"

"APPROVED FOR RELEASE: 06/15/2000 CIA-RDP86-00513R001240020015-6

L 58820-65 EWT(d)/T/EED-2/EWP(1) Pq-4/Pg-4/Pk-4 IJP(c) GG/BB

ACCESSION NR: AR5000581 S/0271/64/000/009/B043/B043
681.142.624

SOURCE: Ref. zh. Avtomat., telemekh. i vychisl. tekhn. Sv. t., Abs. 9B258 44 B

AUTHOR: Garmash, V. A.; Perevarzev, V. S.; Tsirlin, V. M.

TITLE: Device for automatic recognition of printed characters

CITED SOURCE: Sb. Primeneniye tekhn. sredstv i programmir. obuch. v sredn. i vyssh. shkole. T. 1, M., Akad. ped. nauk RSFSR, 1963, 295-300

TOPIC TAGS: pattern recognition, character recognition, Russian letter recognition

TRANSLATION: A device is proposed which permits recognizing printed and typed characters. The problem of character recognition is reduced to establishing the homeomorphism between the exposed pattern and a pattern of the perfect symbols by comparing the indices of corresponding apices. The point index means the number of branches that converge in it. The Russian alphabet characters, excluding Ф, are graphs without internal apices and branches. A rule is given for consecutive determination of indices of all graph nodes which permits obtaining a set of numbers (indices of the nodes passed); the set represents a code of the graph in question. The character А is considered as an example. The index-2 node is unfit for pattern classification, because this index may result only in additional

Card 1/2

APPROVED FOR RELEASE: 06/15/2000 CIA-RDP86-00513R001240020015-6"

"APPROVED FOR RELEASE: 06/15/2000 CIA-RDP86-00513R001240020015-6

L 58820-65

ACCESSION NR: AR5000581

errors which is demonstrated with the character A as an example. It is found that there is no necessity to denote the nodes with higher-than-2 index by different signs. In making the code combination for each character, it is sufficient to state whether the point has index "1" or "over 2". The apices with index 1 are denoted by "1", while those with index 2, by "0". Thus, all code combinations become binary. The alphabet characters and their code combinations are presented, the circuiting of the character being started from the left lower corner. The character recognition is materialized by means of a device that contains a follower scan and the logical circuits; the latter permit isolating the points with the indices 1 or over 2 thus decoding the combination. The operation of the follower scan is described, as is the encoding circuit. The coding results are fed to a circuit which either (for some characters) recognizes the character or indicates to which narrow class the symbol belongs. The scheme of the code tree which performs such a decoding is shown. Five illustrations. Bibliography: 4 titles.

SUB CODE: DP ENCL: 00

Card 2/2 dm

APPROVED FOR RELEASE: 06/15/2000 CIA-RDP86-00513R001240020015-6"

"APPROVED FOR RELEASE: 06/15/2000 CIA-RDP86-00513R001240020015-6

L 00825-67 EWT(1)/EWP(e)/EWT(m) IJP(c) GG/WH/WW/GD

ACC NR: AT6015146 SOURCE CODE: UR/0000/66/000/000/0320/0321

53

AUTHOR: Kaplun, V. A.; Naboykin, Yu. V.; Pereverzev, Yu. A.; Pechiy, K. T.

B+1

ORG: none

TITLE: Absorption of light by excited uranium glass

SOURCE: Respublikanskiy seminar po kvantovoy elektronike. Kvantovaya elektronika (Quantum electronics); trudy seminara. Kiev, Naukova dumka, 1966, 320-321

TOPIC TAGS: light absorption, uranium glass, excited state

ABSTRACT: Wide absorption bands within the visible spectrum range were detected in some uranium-activated glasses by an impulse photometer which permitted photographing the spectra at various stages of relaxation. The absorption had a relaxation time about 1 msec and was, apparently, due to the population of the same level which produced luminescence. Spectral curves of normal absorption, excited absorption, and emission (4000--6500 Å) are shown. The last two curves partially overlap. Addition of titanium oxide or lead oxide to the glass stopped the excited-state absorption. Orig. art. has: 1 figure.

SUB CODE: 20 / SUB DATE: 12Feb66 / ORIG REF: 001 / OTH REF: 002

Card 1/1 fv

APPROVED FOR RELEASE: 06/15/2000 CIA-RDP86-00513R001240020015-6"

"APPROVED FOR RELEASE: 06/15/2000 CIA-RDP86-00513R001240020015-6

SEVAST'YANOV, Mitrofan Ivanovich; PEREVERZOV, V.V., ved. red.; YAKOVLEVA, Z.I., tekhn. red.

[Assembly of petroleum refinery apparatus] Montazh apparatov neftepererabatyvaiushchikh zavodov. Moskva, Gostoptekhizdat, 1963. 175 p. (MIRA 17:2)

APPROVED FOR RELEASE: 06/15/2000 CIA-RDP86-00513R001240020015-6"

"APPROVED FOR RELEASE: 06/15/2000 CIA-RDP86-00513R001240020015-6

BIBISHEV, Aleksey Vasil'yevich; RABINOVICH, Zinoviy Yakovlevich; PEREVERZEV, V.V., ved. red.; YAKOVLEVA, Z.I., tekhn.red.

[Maintenance and operation of equipment used in gas mains] Ekspluatatsiia oborudovaniia magistral'nykh gazoprovodov. Moskva, Gostoptekhizdat, 1963. 430 p. (MIRA 16:5)
(Gas--Pipelines) (Compressors)

APPROVED FOR RELEASE: 06/15/2000 CIA-RDP86-00513R001240020015-6"

"APPROVED FOR RELEASE: 06/15/2000 CIA-RDP86-00513R001240020015-6

ABRUKIN, Abram L'vovich; KHIRNYKH, Leonid Andreyevich; PEREVERZEV, V.V., red.; GOR'KOVA, A.A., ved. red.; YAKOVLEVA, Z.I., tekhn. red.

[Remote control in petroleum production]Telemekhanizatsiia dobychi nefti. Moskva, Gostoptekhizdat, 1962. 302 p. (MIRA 16:2)

(Remote control)
(Oil fields--Equipment and supplies)

APPROVED FOR RELEASE: 06/15/2000 CIA-RDP86-00513R001240020015-6"

"APPROVED FOR RELEASE: 06/15/2000 CIA-RDP86-00513R001240020015-6

KORITYSSKIY, Ya.I.; DOBROGURSKIY, S.O., doktor tekhn. nauk, prof., retsenzent; [redacted], V.V., inzh., red.; TAIROVA, A.L., red. izd-va; UVAROVA, A.F., tekhn. red.

[Studying the dynamics and design of high-speed spindles for textile machines] Issledovaniia dinamiki i konstruktsii vysokoproizvoditel'nykh vereten tekstil'nykh mashin. Moskva, Mashgiz, 1963. 642 p. (MIRA 17:1)
(Spinning machinery)

APPROVED FOR RELEASE: 06/15/2000 CIA-RDP86-00513R001240020015-6"

"APPROVED FOR RELEASE: 06/15/2000 CIA-RDP86-00513R001240020015-6

NIKITENKO, Yevgeniy Aleksandrovich; PERIVERZEV, V.V., ved. red.; FEDOTOV, I.G., tekhn. red.

[Electrochemical protection of gas mains against corrosion] Elektrokhimicheskaia zashchita magistral'nykh gazoprovodov ot korrozii. Moskva, Gostoptekhizdat, 1962. 231 p. (MIRA 15:9)

(Pipelines—Corrosion) (Cathodic protection)

APPROVED FOR RELEASE: 06/15/2000 CIA-RDP86-00513R001240020015-6"

"APPROVED FOR RELEASE: 06/15/2000 CIA-RDP86-00513R001240020015-6

MAMIKONOV, Akop Gasparovich; GESHELIN, Mikhail Georgiyevich; PEREVERZEV, V.V., red.; POLOSINA, A.S., tekhn. red.

[Remote control in the oil and gas industries] Telemekhanika v neftianoi i gazovoi promyshlennosti. Moskva, Gos.nauchno-tekhn.izd-vo neft. i gorno-toplivnoi lit-ry, 1961. 359 p. (MIRA 15:2)

(Oil fields--Communication systems)
(Gas, Natural) (Remote control)

APPROVED FOR RELEASE: 06/15/2000 CIA-RDP86-00513R001240020015-6"

"APPROVED FOR RELEASE: 06/15/2000 CIA-RDP86-00513R001240020015-6

KHARAS, Zakhariy Borisovich; PEREVERZEV, V.V., red.; RASTOVA, G.V., vedushchiy red.; VORONOVA, V.V., tekhn. red.

[Rigging operations in installing equipment at petroleum refineries] Takelazhnye raboty pri montazhe oborudovaniia neftepererabatyvaiushchikh zavodov. Moskva, Gos.nauchno-tekhn.izd-vo neft.i gorno-toplivnoi lit-ry, 1961. 258 p. (MIRA 15:1)

(Petroleum refineries—Equipment and supplies)

APPROVED FOR RELEASE: 06/15/2000 CIA-RDP86-00513R001240020015-6"

"APPROVED FOR RELEASE: 06/15/2000 CIA-RDP86-00513R001240020015-6

PORTNOY, Teodor Zinov'yevich; YUN'KOV, Mikhail Grigor'yevich; YURCHENKO, Petr Ivanovich; PEREVERZEV, V.V., red.; RASTOVA, G.V., vedushchiy red.; MUKHINA, E.A., tekhn.red.

[Electric equipment of oil well drilling rigs manufactured by the Ural Machinery Plant] Elektrooborudovanie burovykh ustanovok Uralmashzavoda. Moskva, Gos.nauchno-tekhn.izd-vo neft.i gorno-toplivnoi lit-ry, 1961. 230 p.

(MIRA 14:5)

(Sverdlovsk--Oil well drilling rigs--Electric equipment)

APPROVED FOR RELEASE: 06/15/2000 CIA-RDP86-00513R001240020015-6"

"APPROVED FOR RELEASE: 06/15/2000 CIA-RDP86-00513R001240020015-6

DAVIDOVICH, Petr Yakovlevich; ZINOVKINA, Miloslava Mikhaylovna; KRIKUN, Viktor Yakovlevich; LUCHSHEV, Anatoliy Mikhaylovich; PEREVERZEV, V.V., red.; RASTOVA, G.G., vedushchiy red.; MUKHINA, E.A., tekhn. red.

[Rotary trench excavators for laying pipes; manual for excavator operators] Transheinye rotornye ekskavatory dlia truboprovodnogo stroitel'stva; v pomoshch' mashinistu ekskavatora. Moskva, Gos. nauchno-tekhn. izd-vo neft. i gorno-toplivnoi lit-ry, 1961. 223 p. (MIRA 14:10)

(Excavating machinery)

APPROVED FOR RELEASE: 06/15/2000 CIA-RDP86-00513R001240020015-6"

"APPROVED FOR RELEASE: 06/15/2000 CIA-RDP86-00513R001240020015-6

BLAERGAL', A.V.; SINITSYN, V.I.; LESHCHINSKIY, N.I.; ISAYEV, B.M., red.; PEREVERZEV, V.V., red.; MAZEL', Ye.I., tekhn.red.

[Isotopic gamma-ray sources] Izotopnye gamma-ustanovki. Pod red. B.M.Isaeva. Moskva, Gos.izd-vo lit-ry v oblasti atomnoi nauki i tekhniki, 1960. 137 p. (MIRA 14:3)
(Gamma rays--Equipment and supplies)

APPROVED FOR RELEASE: 06/15/2000 CIA-RDP86-00513R001240020015-6"

"APPROVED FOR RELEASE: 06/15/2000 CIA-RDP86-00513R001240020015-6

SAVITSKIY, Ye.M., prof., doktor khim.nauk; NOVIKOV, I.I., kand.tekhn. nauk, red.; PEREVERZEV, V.V., red.; ZYKIN, V.I., tekhn.red.

[Rare metals and alloys] Redkie metally i splavy. Moskva, Dom tekhniki, 1959. 83 p. (MIRA 13:8)
(Rare earth metals)

APPROVED FOR RELEASE: 06/15/2000 CIA-RDP86-00513R001240020015-6"

"APPROVED FOR RELEASE: 06/15/2000 CIA-RDP86-00513R001240020015-6

BOCHVAR, A.A., akademik, obshchiy red.; VINOGRADOV, A.P., akademik, obshchiy red.; YEMEL'YANOV, V.S.; ZEFIROV, A.P., doktor tekhn. nauk, obshchiy red.; ZUBOV, A.I., red.; ZVEREV, G.L., red.; PEREVERZIV, V.V., red.; PCHELINTSEVA, G.M., red.; MAZEL', Ye.I., tekhn.red.

[Proceedings of the Second International Conference on the Peaceful Uses of Atomic Energy, Geneva, 1958] Trudy Vtoroi mezhdunarodnoy konferentsii po mirnomu ispol'zovaniyu atomnoy energii, Zheneva, 1958. (Doklady sovetskikh uchenykh) Moskva, Izd-vo Glav.uprav.po ispol'zovaniiu atomnoi energ. pri Sovete Ministrov SSSR. Vol.3. [Nuclear fuel and reactor metals] IAdernoe goriuchee i reaktornye metally. 1959. 670 p. (MIRA 12:11)

1. International Conference on the Peaceful Uses of Atomic Energy, 2d, Geneva, 1958. 2. Chlen-korrespondent AN SSSR (for Yemel'yanov). (Nuclear fuels)

APPROVED FOR RELEASE: 06/15/2000 CIA-RDP86-00513R001240020015-6"

"APPROVED FOR RELEASE: 06/15/2000 CIA-RDP86-00513R001240020015-6

BOCHVAR, A.A., akademik, red.; YEMEL'YANOV, V.S., red.; ZVEREV, G.L., red. toma; IVANOV, A.N., red. toma; SOKURSKIY, Yu.N., red. toma; STERLIN, Ya.M., red. toma; PEREVERZEV, V.V., red.; PCHELINTSEVA, G.M., red.; MAZEL', Ye.I., tekhn. red.

[Transactions of the International Conference On The Peaceful Uses of Atomic Energy] Trudy Vtoroy mezhdunarodnoy konferentsii po mirnomu ispol'zovaniyu atomnoy energii, 2d, Geneva, 1958. Izbrannye Doklady inos rannykh uchenykh. Moskva, Izd-vo Glav. uprav. po ispol'zovaniiu atomnoi energ. pri Sovete Ministrov SSSR. Vol.6. [Nuclear fuel and ractor materials] IAdernoe goriuchee i reaktornye materialy. Pod obshchei red. A.A.Bochvara i Emel'ianova V.S. 1959. 702 p. (MIRA 14:10)

1. International Conference on The Peaceful Uses of Atomic Energy. 2d, Geneva, 1958. 2. Chlen-korrespondent AN SSSR (for Yemel'yanov). (Nuclear fuels) (Nuclear reactors—Materials)

APPROVED FOR RELEASE: 06/15/2000 CIA-RDP86-00513R001240020015-6"

"APPROVED FOR RELEASE: 06/15/2000 CIA-RDP86-00513R001240020015-6

S/024/60/000/03/025/028
E140/E463

AUTHORS: Garmash, V.A., Pereverzev-Orlov, V.S. and Tsirlin, V.M. (Moscow)

TITLE: On a Quasi-Topological Method of Character Recognition

PERIODICAL: Izvestiya Akademii nauk SSSR, Otdeleniye tekhnicheskikh nauk, Energetika i avtomatika, 1960, Nr 3, pp 180-182 (USSR)

ABSTRACT: Alphabetical and numerical characters may be coded by tracing their outlines and determining their topological features. In the present communication only the external outline is traced (the article concerns the Russian alphabet but an example in the Latin alphabet where this assumption would be significant would be the letter Q where the part of the tail inside the body of letter would be omitted). The coding consists of noting the number of branches emerging from each node (in the letter I there are 2 nodes with one branch each, in the letter A there are 4 nodes with 1, 3, 3, 1 branches respectively (neglecting serifs)). Depending on the node at which the scanning procedure is commenced, the code obtained will have a cyclical permutation. Further, several letters may have the same code, eg T and Y.

Card 1/2

APPROVED FOR RELEASE: 06/15/2000 CIA-RDP86-00513R001240020015-6"

"APPROVED FOR RELEASE: 06/15/2000 CIA-RDP86-00513R001240020015-6

PEREVERZEV-ORLOV, V.; TSIBLIN, V.

Radio receivers with miniature earphones. Radio no.5:47-48 My '60. (MIRA 13:12)

(Transistor radios)

APPROVED FOR RELEASE: 06/15/2000 CIA-RDP86-00513R001240020015-6"

"APPROVED FOR RELEASE: 06/15/2000 CIA-RDP86-00513R001240020015-6

9.6000 (1040)
6.6000

25757
S/024/61/000/001/011/014
E035/E117

AUTHORS: Garmash, V.A., Pereverzev-Orlov, V.S., and Tsirlin, V.M. (Moscow)

TITLE: A Device for Scanning the Edges of Patterns

PERIODICAL: Izvestiya Akademii nauk SSSR, Otdeleniye tekhnicheskikh nauk, Energetika i avtomatika, 1961, No.1, pp. 166-170

TEXT: The logic of many pattern recognition systems uses information about the edge of a pattern. Although this information can be derived from a systematic scan in two perpendicular directions, it is much more convenient to obtain it from a device which scans the edge of the pattern directly. The two main problems which arise in a scanner of this kind are: 1) the problem of assuring that the position of the scanning spot on the border of the pattern is stable; and 2) the problem of making the spot follow the border in a predetermined direction. These two problems can theoretically be solved as follows. The spot is caused to move in a small circle, which intersects the border of the pattern. Each time that the spot crosses the border - say from white to black, the centre of the small scanning circle is

Card 1/5

APPROVED FOR RELEASE: 06/15/2000 CIA-RDP86-00513R001240020015-6"

"APPROVED FOR RELEASE: 06/15/2000 CIA-RDP86-00513R001240020015-6

25757
S/024/61/000/001/011/014
E035/E117

A Device for Scanning the Edges of Patterns

moved to the point where the intersection occurred. This will ensure that the scanning spot will follow the border in a predetermined direction and never move away from it. A block diagram of a system designed to carry out this type of scanning is shown in Fig.2. A sine-wave generator 1 drives a phase splitter 3 through a delay network 2. The phase splitter has two outputs with a 90° phase difference, which are eventually used to produce the small scanning circle. The sine-wave generator also drives another phase splitter 4, which is similar to 3. The outputs from 4 are gated by two 'end gates' 5 and 6, and drive two integrators 7 and 8. The outputs of these two integrators are used to control the position of the spot on the screen of the scanning tube 11 through two amplifiers 9 and 10. A real image of the scanning tube screen is formed on the pattern being scanned, and a photomultiplier 12 is actuated by reflected light from this pattern. The output signal is amplified by a video-amplifier 13, and is supplied to a differentiator and pulse shaper 14. The output of 14 is a

Card 2/ 5

APPROVED FOR RELEASE: 06/15/2000 CIA-RDP86-00513R001240020015-6"

"APPROVED FOR RELEASE: 06/15/2000 CIA-RDP86-00513R001240020015-6

25757
S/024/61/000/001/011/014
E035/E117

A Device for Scanning the Edges of Patterns

short rectangular pulse, which occurs whever the scanning spot passes from white to black. It is used to gate the instantaneous values of the basic driving waveforms to the integrators 7 and 8. The monitoring tube 15 is driven by the circuits in blocks 16 to 21, which operate in a very similar way to the ones which are used to drive the scanning tube. A variable delay 22 is introduced to allow the image on tube 15 to be rotated. The size of the scanning circle is controlled by two amplifiers 23 and 24. These amplifiers have a variable gain which is controlled by 25. The device uses mostly conventional tube circuitry. Two transistors are used in each of the gates. The scanner was tested with a basic frequency of 10 kc/s, a spot diameter of 0.4 mm and a scanning circle diameter of 1.5 mm, and a unit shift of the scanning circle of 0.5 mm. This led to a following speed of about 5 metres/sec. The scanner was well able to follow shapes substantially larger than the scanning circle. Shapes smaller than the scanning circle were detected as 'dots', the scanning circle positioning itself around them. The scan

Card 3/ 5

APPROVED FOR RELEASE: 06/15/2000 CIA-RDP86-00513R001240020015-6"

"APPROVED FOR RELEASE: 06/15/2000 CIA-RDP86-00513R001240020015-6

25757

S/024/61/000/001/011/014
E035/E117

A Device for Scanning the Edges of Patterns

followed the dots when they were moved. The scanner was originally designed for use with a quasi-topological device for reading Russian letters; but it could also be useful in a number of other fields, notably those of measuring geometrical drawings and the transmission of pictures.

Acknowledgements are made to A.A. Kharkevich for his interest in the work.

There are 5 figures and 6 references: 1 Soviet and 5 English.

SUBMITTED: May 27, 1960

Card 4/5

APPROVED FOR RELEASE: 06/15/2000 CIA-RDP86-00513R001240020015-6"

"APPROVED FOR RELEASE: 06/15/2000 CIA-RDP86-00513R001240020015-6

23160
S/024/61/000/003/008/012
E140/E463

6.9500

AUTHORS: Pereverzev-Oplov, V.S. and Polyakov, V.G. (Moscow)

TITLE: On the design of reading machines

PERIODICAL: Izvestiya Akademii nauk SSSR, Otdeleniye tekhnicheskikh nauk, Energetika i avtomatika, 1961, No.3, pp.110-112

TEXT: The article describes the progress of experimental work in the realization of the quasi-topological method of character recognition proposed in Ref.1 (Garmash V.A., Pereverzev-Oplov V.S., Tsirlin V.M. Izv. AN SSSR, OTN, Energetika i avtomatika, 1960, No.3). One of the more significant changes is that the centre of the scanning circle now passes along the centre-line of the strokes composing the character, rather than over the black-white boundary, as shown in Fig.1. A simple programme enables the scanning circle to trace out the entire character uniquely. The device is instructed to ignore serifs (as at A in Fig.1). The coding is as follows: the symbol 1 indicates an end, the symbol 0 a node at which three branches join, the symbol 00 a node at which four branches join. In Fig.1, for example, the letter p gives rise to the code 100. Rules are then given for reducing the redundancy of these codes. Since, in general, a large number of

Card 1/3

APPROVED FOR RELEASE: 06/15/2000 CIA-RDP86-00513R001240020015-6"

"APPROVED FOR RELEASE: 06/15/2000 CIA-RDP86-00513R001240020015-6

23160

On the design of reading machines S/024/61/000/003/008/012
E140/E463

letters will have the same quasi-topological code, additional recognition criteria are being studied. Thus, for example, to distinguish P from b, it is sufficient to define the position at which the terminal "1" is found. This is done by defining four quadrants, as shown in Fig.2. A.A.Kharkevich advised during the course of the work. There are 3 figures, 2 tables and 1 Soviet reference.

SUBMITTED: March 6, 1961

Card 2/3

APPROVED FOR RELEASE: 06/15/2000 CIA-RDP86-00513R001240020015-6"

"APPROVED FOR RELEASE: 06/15/2000 CIA-RDP86-00513R001240020015-6

23160

On the design of reading machines

S/024/61/000/003/008/012
E140/E463

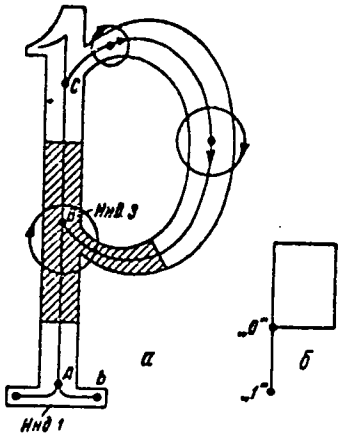

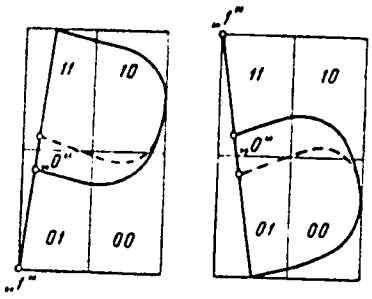

Card 3/3

Fig.1.

Fig.2.

APPROVED FOR RELEASE: 06/15/2000 CIA-RDP86-00513R001240020015-6"

"APPROVED FOR RELEASE: 06/15/2000 CIA-RDP86-00513R001240020015-6

POLYAKOV, V.G.; PEREVERZEV-ORLOV, V.S.; YAROSLAVSKIY, L.P.; LEVITIN, L.B.

Conference of young specialists of the Institute. Probl. pered. inform. no.16:91-93 '64. (MIRA 17:12)

1. Institut problem peredachi informatsii AN SSSR.

APPROVED FOR RELEASE: 06/15/2000 CIA-RDP86-00513R001240020015-6"

"APPROVED FOR RELEASE: 06/15/2000 CIA-RDP86-00513R001240020015-6

ACC NR: AP6032513 SOURCE CODE: UR/0413/66/000/017/0088/0088

INVENTOR: Polyakov, V. G.; Pereverzev-Orlov, V. S.

ORG: none

TITLE: Device for the readout of graphic functions designed in the form of an opaque mask. Class 42, No. 185545

SOURCE: Izobreteniya, promyshlennyye obraztsy, tovarnyye znaki, no. 17, 1966, 88

TOPIC TAGS: function, sweep generator, graphic function, master oscillator, coordinated counter, function readout, readout device

ABSTRACT: The proposed device for the readout of graphic functions (see Fig. 1), designed in the form of an opaque mask, contains a photoelectronic converter with a scanning beam, a master oscillator which is connected through a video-signal time-quantization device, and a switch with a small-image-zone sweep generator. The latter is connected through adding amplifiers with vertically and horizontally deviating systems. Furthermore, the proposed device contains two coordinated counters whose inputs are connected through weight cells with the outputs of the

Card 1/2 UDC: 681.142.07

APPROVED FOR RELEASE: 06/15/2000 CIA-RDP86-00513R001240020015-6"

"APPROVED FOR RELEASE: 06/15/2000 CIA-RDP86-00513R001240020015-6

ACC NR: AP6032513

switch. To eliminate the influence of the velocity of the beam tracking the contour of the graph on the accuracy of the calculation of the coordinates, digital-analog converters, whose outputs are connected to the adding amplifiers of the channels of vertical and horizontal deviation, are connected to each coordinated counter. [Translation]

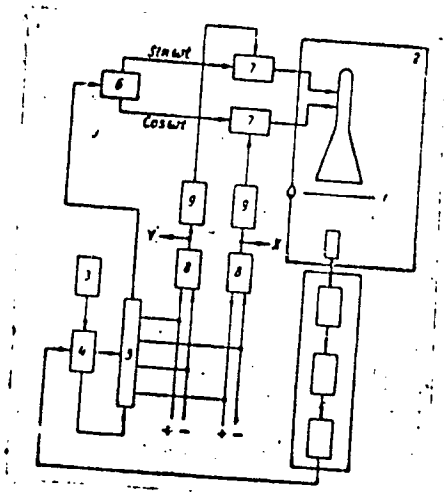

Fig. 1. Readout device.
1—Opaque mask; 2—photoelectronic converter; 3—master oscillator; 4—time quantization device; 5—switch; 6—sweep generator; 7—adding amplifiers; 8—coordinated counters; 9—digital-analog converters

Card 2/2 SUB CODE: 09/SUBM DATE: 15Apr65/

APPROVED FOR RELEASE: 06/15/2000 CIA-RDP86-00513R001240020015-6"

"APPROVED FOR RELEASE: 06/15/2000 CIA-RDP86-00513R001240020015-6

L 17848-66 EWT(d)/T/EWP(1) IJP(c) GS

ACC NR: AT6004696 SOURCE CODE: UR/0000/65/000/000/0142/0146

44
42
B+1

AUTHOR: Polyakov, V. G.; Pereverzev-Orlov, V. S.

ORG: none

TITLE: Some applications of series integrator circuit

SOURCE: AN SSSR. Institut problem peredachi informatsii. Opoznaniye obrazov. Teoriya peredachi informatsii (Pattern recognition. Theory of information transmission). Moscow, Izd-vo Nauka, 1965, 142-146

TOPIC TAGS: analog computer, integration

ABSTRACT: Analog circuits carrying out integral transformations of the type

$$F = \int_0^T P(t) f(t)\, dt, \qquad (1)$$

often contain units for the multiplications of two functions. The Duhamel integral modeling

16,44,55

2

Card 1/3

APPROVED FOR RELEASE: 06/15/2000 CIA-RDP86-00513R001240020015-6"

"APPROVED FOR RELEASE: 06/15/2000 CIA-RDP86-00513R001240020015-6

L 17848-66

ACC NR: AT6004696

$$D(t) = \int_0^t W(t-\tau) f(\tau)\, d\tau \qquad (2)$$

is based usually on delay circuits. However, both cases can be solved approximately by combining in series integrating, adding, and subtracting elements. Mathematically, the approach is based on the reverse use of Cauchy's formula

$$\int_0^T (T-t)^n f(t)\, dt = n! \underbrace{\int_0^T dt \int_0^t dt \ldots \int_0^t f(t)\, dt}_{n \text{ times}}. \qquad (3)$$

Consequently, the circuit modeling the expressions (1) and (2) has a form shown in Figure 1.

Card 2/3

APPROVED FOR RELEASE: 06/15/2000 CIA-RDP86-00513R001240020015-6"

"APPROVED FOR RELEASE: 06/15/2000 CIA-RDP86-00513R001240020015-6

L 17848-66
ACC NR: AT6004698

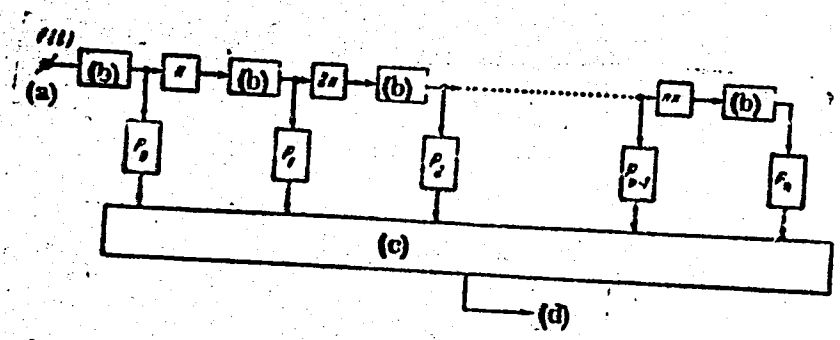

a - input; b - integrator; c - adder; d - output.

Figure 1. Circuit modeling expressions (1) and (2).

The authors thank A. A. Kharkevich and I. T. Turbovich for their remarks. Orig. art. has: 20 formulas and 2 figures.

SUB CODE: 09/ SUBM DATE: 25Sep65

Card 3/3 nst

APPROVED FOR RELEASE: 06/15/2000 CIA-RDP86-00513R001240020015-6"

"APPROVED FOR RELEASE: 06/15/2000 CIA-RDP86-00513R001240020015-6

PETROV, Igor' Petrovich; SHIRIDOVOV, Viktor Vasil'yevich;
PEREVERZEV, V.V., red.; RASTOVA, G.V., ved. red.

[Overground laying of pipelines. Nadzemnaia prokladka [illegible] provodov. Moskva, Nedra, 1965. [illegible] p. [illegible]

APPROVED FOR RELEASE: 06/15/2000 CIA-RDP86-00513R001240020015-6"

"APPROVED FOR RELEASE: 06/15/2000 CIA-RDP86-00513R001240020015-6

PEREVERZEVA, A. K.

PEREVERZEVA, A. K. -- "Influence of Mineral Fertilizers on the Growth, Development, and Fruitfulness of the Grape Vine." Min of Light Industry and Food Industry USSR, All-Union Sci Res Inst of Winemaking and Viticulture "Magarach," Central Asiatic Affiliate, Tashkent, 1953 (Dissertation For the Degree of Candidate in Agricultural Sciences)

SO: Knizhnaya letopis' No. 36, 3 September 1955

APPROVED FOR RELEASE: 06/15/2000 CIA-RDP86-00513R001240020015-6"

"APPROVED FOR RELEASE: 06/15/2000 CIA-RDP86-00513R001240020015-6

PEREVERZEVA, A.K.

Increasing the amount of nitrogen in soil. A. K. Pereverzeva. *Vinodelie i Vinogradarstvo S.S.S.R.* 11, No. 3, 14-7(1951).—Soils in a Tashkent district, U.S.S.R., that have not received N fertilizers to the time of the examn. contained no N in the soil horizons below 20 cm. After addn. of 120 kg. N (as nitrate)/ha, the soils contained in some cases as high as 17.8 and 12.[illegible] mg. N/kg. soil in the horizons of 20-50 and 50-100 cm., [illegible] in the horizon of 0-20 cm. the amt. of N was 22.[illegible] mg. after the N addn. as compared to 11.3 mg. N/kg. soil before the addn. of the fertilizers. The amt. of N in the soil was higher in June than in April. The addn. of N increased the growth of vine shoots, leaf surface area, and the yield (approx. 50%). The N supply in the form of furrowed green pea raised the amt. of N in the soil (up to 14-18.7 mg. N/kg. soil in the 20-50 cm. horizon), though the overall effect of the green-mass N was inferior to the effect of the inorg.-fertilizer N. B. W.

APPROVED FOR RELEASE: 06/15/2000 CIA-RDP86-00513R001240020015-6"

"APPROVED FOR RELEASE: 06/15/2000 CIA-RDP86-00513R001240020015-6

PEREVERZEVA, A. K.

PEREVERZEVA, A. K.--"Influence of Mineral Fertilizers on the Growth, Development, and Fruitfulness of the Grape Vine." (Dissertations for Degrees in ~~Science~~ and Engineering Defended at USSR Higher Educational Institutions) Min of Light Industry USSR, All-Union Sci Res Inst of Winemaking and Viticulture "Magarach," Central Asiatic Affiliate, Tashkent, 1953. Agricultural Sciences

SO: Knizhnaya Letopis' No. 36, 3 September 55.

APPROVED FOR RELEASE: 06/15/2000 CIA-RDP86-00513R001240020015-6"

"APPROVED FOR RELEASE: 06/15/2000 CIA-RDP86-00513R001240020015-6

CA

24

Technical achievements of the ammunition industry during World War II, 1939-1945. I. A. E. Pereverzev. *Trudy Leningrad. Tekhnol. Inst. im Leningrad Soveta* 1946, No. 13, 47-68.—No essentially new high explosives were used for charging artillery shells, bombs, torpedoes, mines, and hand grenades. Most improvements came from compounding previously known substances in mixts. and in improved techniques for loading the charges. The principal aromatic explosives used were TNT, picric acid, hexanitrodiphenylamine, and dinitrophenol alone or in mixts. with NH_4NO_3 and other substances. TNT was the most used—between 40 and 50% of the total. The

suitably $(NH_4)_2CO_3$], or $NaHPO_4$, Na_2HPO_4, $NaHSO_4$, or $NaHCO_3$. The pptg. bath may contain 20-30% of the acid or salt at 150-200°F.; the time of treatment may be a fraction of a sec., after which the paper is washed with hot H_2O to remove the Na salts. The treatment can be applied to vegetable parchment, paperboard, or the like, and yields an oil, grease, org. solvent, and aromatic odor and gas-impermeable product, suitable for butter or lard wrappers, paper plates and cups, and the like. U.S. 2,-502,783. The coating agent is prepd. from 100 parts of clay dispersed in 100 parts 5% NaOH and 6 parts H_2O-insol. hydroxyethylcellulose in 100 parts 5% NaOH. After application, the NaOH is removed according to the above patent. The resulting coating is particularly suitable for printing paper.

C. J. West

APPROVED FOR RELEASE: 06/15/2000 CIA-RDP86-00513R001240020015-6"

"APPROVED FOR RELEASE: 06/15/2000 CIA-RDP86-00513R001240020015-6

RYBALKA, V.V.; PEREVERZEVA, A.V. [Pereverzieva, A.V.]

Effect of thermal treatment on the magnetic resistance of germanium. Ukr. fiz. zhur. 6 no.3:424-425 My-Je '61. (MIRA 14:8)

1. L'vovskiy gosudarstvennyy universitet.
(Germanium--Magnetic properties)

APPROVED FOR RELEASE: 06/15/2000 CIA-RDP86-00513R001240020015-6"

"APPROVED FOR RELEASE: 06/15/2000 CIA-RDP86-00513R001240020015-6

PEREVERZEVA, A.Ye.

GORST, Avgust Georgiyevich, doktor khimicheskikh nauk, professor; BAGALA, L.I., professor, retsenzent; DANILOVA, S.N., professor, retsenzent; PEREVERZEVA, A.Ye., professor, retsenzent; GOL'BINDER, A.I., kandidat tekhnicheskikh nauk, redaktor; BOGOMOLOVA, M.F., izdatel'skiy redaktor; ROZHIN, V.P., tekhnicheskiy redaktor.

[Gunpowder and explosives] Porokha i vzryvchatye veshchestva. Izd. 2-oe, perer. Moskva, Gos.izd-vo obor.promyshl., 1957. 186 p. (MIRA 10:11)

(Explosives, Military) (Gunpowder)

APPROVED FOR RELEASE: 06/15/2000 CIA-RDP86-00513R001240020015-6"

"APPROVED FOR RELEASE: 06/15/2000 CIA-RDP86-00513R001240020015-6

20-6-39/47

AUTHORS: Fedorov, M. V., and Pereverzeva, G. I.,

TITLE: Inactivation of the Carboxylase Enzyme by Nitrites in Growing and Multiplying Cells of Bact. lactis aerogenes (Inaktivatsiya fermenta karboksilazy nitritami v rastushchikh i razmnozhayushchikhsya kletkakh Bact. lactis aerogenes)

PERIODICAL: Doklady AN SSSR, 1957, Vol. 117, Nr 6, pp. 1060-1063 (USSR)

ABSTRACT: The ability of the bacteria of the group coli-aerogenes sometimes to reduce nitrates and nitrites to ammonia is for a long time known (references 6,9,10). But the fermentation of sugar in the presence of nitrates and nitrites in the culture medium has never been investigated. According to reference 4 the introduction of these salts in small quantities completely changes the qualitative and quantitative composition of the fermentation products of Bact. coli. The develpment of these microbes very successfully takes place, but neither gases nor ethyl alcohol are produced. For this reason the assumption was expressed that nitrites and nitrates inactivate the carboxylase. The authors therefore performed experiments with the obstruction of this enzyme in the cells of Bact. lactis aerogenes . The results are given in table 1. They refer to the fermentation of lacetose in skim milk. The obtained results show that nitrites in adequate does actually cause such

Card 1/3

APPROVED FOR RELEASE: 06/15/2000 CIA-RDP86-00513R001240020015-6"

"APPROVED FOR RELEASE: 06/15/2000 CIA-RDP86-00513R001240020015-6

Inactivation of the Carboxylase Enzymes by Nitrites in Growing and in Multiplying Cells of Bact. lactis aerogenes. 20-6-39/47

ASSOCIATION: Moscow Agricultural Academy imeni K.A. Timiryazev (Moskovskaya sel'skokhozyaystvennaya akademiya im. K.A. Timiryazev)

PRESENTED: July 11, 1957, by V.N. Shaposhnikov, Academician

SUBMITTED: May 27, 1957

AVAILABLE: Library of Congress

Card 3/3

APPROVED FOR RELEASE: 06/15/2000 CIA-RDP86-00513R001240020015-6"

"APPROVED FOR RELEASE: 06/15/2000 CIA-RDP86-00513R001240020015-6

PEREVERZEVA, G.I., kand. biolog. nauk, dosent

Effect of nitrates and nitrites on the composition of the fermentation products of butyric acid bacteria. Izv. TSKHA no.5, 130-134 (MIRA [illegible]) '63

APPROVED FOR RELEASE: 06/15/2000 CIA-RDP86-00513R001240020015-6"

"APPROVED FOR RELEASE: 06/15/2000 CIA-RDP86-00513R001240020015-6

PEREVERZEVA G. I.

FEDOROV, M.V.; PEREVERZEVA, G.I.

Inactivation of the carboxylase enzyme by nitrites in growing and multiplying cells of Bacterium lactis aerogenes. Dokl. AN SSSR. 117 no.6:1060-1063 D '57. (MIRA 11:3)

1. Moskovskaya sel'skokhozyaystvennaya akademiya im. K.A. Timiryazeva. Predstavleno akademikom V.N. Shaposhnikovym.
(Bacteria, Aerobic) (Intestines--Bacteriology)

APPROVED FOR RELEASE: 06/15/2000 CIA-RDP86-00513R001240020015-6"

"APPROVED FOR RELEASE: 06/15/2000 CIA-RDP86-00513R001240020015-6

PEREVERZEVA, L. I.

3-8-4/34

AUTHOR: Pereverzeva, L.I.

TITLE: More on Group-Workshops (Yeshchё ob uchebnykh kabinetakh)

PERIODICAL: Vestnik Vysshey Shkoly, 1957, # 8, pp 19-20 (USSR)

ABSTRACT: The article describes the methodic and propagandistic work done by the group-workshops in KPSS History, Marxism-Leninism and Political Economy at the Sverdlovsk vuzes. They assist the chairs in the organization of the teaching processes and organize exhibitions, conduct reference and bibliographical work, etc.

Last year, the literature of the group-workshops was inspected and supplemented, their visual aids were repaired and altered.

Much positive experience was gained by the groups of the polytechnical-medical and agricultural institutes at Sverdlovsk.

Visual agitation and propaganda is well organized at the group-workshops of Marxism-Leninism of the Sverdlovsk Forestry Engineering Institute. Its members give methodical help to the students, sort out current material required for the study of social disciplines, and take active part in the educational work. The article points out some de-

Card 1/2

APPROVED FOR RELEASE: 06/15/2000 CIA-RDP86-00513R001240020015-6"

"APPROVED FOR RELEASE: 06/15/2000 CIA-RDP86-00513R001240020015-6

PEREVERZEVA, R.A., kand.med.nauk; NIKITINA, O.P.

Case of surgical treatment of adrenal pheochromocytoma using hormone therapy. Khirurgiia no.10:145-146 '64. (MIRA 18:8)

1. 3-ya khirurgicheskoye otdeleniye (zav. - prof. G.D.Vilyavin) Instituta khirurgii imeni Vishnevskogo, Moskva.

APPROVED FOR RELEASE: 06/15/2000 CIA-RDP86-00513R001240020015-6"

"APPROVED FOR RELEASE: 06/15/2000 CIA-RDP86-00513R001240020015-6

PEREVERZEVA, R.A. (Moskva)

Changes in the sensitivity of neurons in the spinal ganglia following thermal burns. Eksper.khir. i anest. no.2:37-40'63. (BURNS AND SCALDS) (NERVES, SPINAL) (MIRA 16:7)

APPROVED FOR RELEASE: 06/15/2000 CIA-RDP86-00513R001240020015-6"

"APPROVED FOR RELEASE: 06/15/2000 CIA-RDP86-00513R001240020015-6

PEREVERZEVA, R.A.

Histopathology of the synapses of sympathetic ganglia in thermal burns. Eksp. khir. i anest. 7 no.6:75-77 N-D '62. (MIRA 17:1)

1. Iz ozhogovogo otdeleniya (zav. - doktor med. nauk M.I. Shrayber) Instituta khirurgii imeni A.V. Vishnevskogo (dir. - deystvitel'nyy chlen AMN SSSR prof. A.A. Vishnevskiy) AMN SSSR.

APPROVED FOR RELEASE: 06/15/2000 CIA-RDP86-00513R001240020015-6"

"APPROVED FOR RELEASE: 06/15/2000 CIA-RDP86-00513R001240020015-6

ZOLOTAREVSKIY, V.Ya., kand.med.nauk; PEREVERZEVA, R.A., kand.med.nauk

Resorptive properties of burn wounds. Voen.med.zhur. no.5: 57-59 My '59. (MIRA 12:8)
(BURNS, physiol.
resorptive properties (Rus))

APPROVED FOR RELEASE: 06/15/2000 CIA-RDP86-00513R001240020015-6"

"APPROVED FOR RELEASE: 06/15/2000 CIA-RDP86-00513R001240020015-6

L 39712-66 EWP(k)/EWT(m)/EWP(t) IJP(c) JD/JG/GD-2

ACC NR: AP6007951 (N) SOURCE CODE: UR/0089/66/020/002/0144/0145

AUTHOR: Grebennikov, R. V.; Chirkin, A. V.; Pereverzeva, R. K.; Vukolova, V. N.; Demidov, P. I.

ORG: none

TITLE: Effect of vanadium on the phase composition and structure of high-boron steel

SOURCE: Atomnaya energiya, v. 20, no. [illegible], 1966, 144-145

TOPIC TAGS: boron steel, high boron steel, steel machinability, machinability improvement, boron containing steel, alloy steel, vanadium containing steel

ABSTRACT: The effect of vanadium on the structure and machinability of high-boron steels has been studied. These steels have a low plasticity and machinability caused by a high content of boron phase of the M_2B type. The amount of this phase can be reduced by promoting formation of borides containing more boron per unit volume than M_2B. Nine heats containing up to 0.02% carbon, 0.47—20.4% chromium, 0—17.83% nickel, 2.88—3.46% boron and 0—11.2% V were tested. It was found that in the presence of vanadium, in addition to M_2B boride, a tetrogonal M_3B_2 boride is formed whose quantity increases with increasing vanadium content. At 11% vanadium, the whole boride phase consists of M_3B_2 and the volume of the boride phase decreases by approximately 10%. The steel containing 3—3.5% boron and 7—11% vanadium can be easily machined with standard cutting tools. Orig. art. has: 2 figures and 1 table. [WW]

SUB CODE: 11/ SUBM DATE: 07Aug65/ OTH REF: 005/ ATD PRESS: [illegible]

UDC: 669.15:621.039

Card 1/1

APPROVED FOR RELEASE: 06/15/2000 CIA-RDP86-00513R001240020015-6"

"APPROVED FOR RELEASE: 06/15/2000 CIA-RDP86-00513R001240020015-6

1ST AND 2ND ORDERS

PROCESSES AND PROPERTIES INDEX

3RD AND 4TH ORDERS

B-III-4

BC

[illegible] of moisture in soya beans. A. N. [illegible] and T. V. [illegible] (Sekr. [illegible] Moskov. [illegible], U.S.S.R., 1931, [illegible]).—Normann's xylene method and Jakowenko's carbide method are preferred. True vals. cannot be obtained. Cr. Ans.

ASM-SLA METALLURGICAL LITERATURE CLASSIFICATION

APPROVED FOR RELEASE: 06/15/2000 CIA-RDP86-00513R001240020015-6"

"APPROVED FOR RELEASE: 06/15/2000 CIA-RDP86-00513R001240020015-6

PEREVERZEVA, V.; MALYSH, N.; PRONIN, N.

State bank business and people. Den. i kred. 19 no. 1:40-47 Ja '61. (MIRA 14:2)

1. Nachal'nik otdela kadrov Sverdlovskoy kontory Gosbanka (for Pereverzeva). 2. Zamestitel' upravleyayushchego Odesskoy kontoroy Gosbanka (for Malysh). 3. Glavnyy bukhgalter Odesskoy kontory Gosbanka (for Pronin).
(Sverdlovsk Province—Bank employees—Education and training)
(Izmail—Banks and banking—Accounting)

APPROVED FOR RELEASE: 06/15/2000 CIA-RDP86-00513R001240020015-6"

"APPROVED FOR RELEASE: 06/15/2000 CIA-RDP86-00513R001240020015-6

PEREVERZEVA, V. A.

USSR/Cultivable Plants - Grains.

M-2

Abs Jour : Ref Zhur - Biol., No 3, 1958, 10772

Author : Pereverzeva, V.A.

Inst : Stavropol Agricultural Institute.

Title : The Cultivation of Foxtail Millet in the Central Zone of Stavropol'ye.

Orig Pub : Tr. Stavropol'sk. s.-kh. in-ta, 1956, No 7, 119-128.

Abstract : A description is given of the economic significance and the agricultural engineering aspects of the cultivation of this crop, newly introduced into Stavropol'ye, which can be eaten and used for fodder. The high content of albumin, fat, and vitamins B_1, B_2 and E and the provitamin A in the grain of foxtail millet is noted. Its fodder value is significantly increased when foxtail millet is sown together with beans, and a high yield of green mass and hay is achieved.

Card 1/1

APPROVED FOR RELEASE: 06/15/2000 CIA-RDP86-00513R001240020015-6"

"APPROVED FOR RELEASE: 06/15/2000 CIA-RDP86-00513R001240020015-6

PEREVERZEVA, YE. G.

4
4E2C

27 18

Distribution of chromium between the metal and slag of variable composition. B. V. Stark and E. G. Pereverzeva. *Tekhnol. Proizvodstva i Obrabotki Stali, Moskov. Inst. Stali im. I. V. Stalina* 31, 14-39(1953).—With increase of the content of iron oxides in the slags, the coeff. of Cr distribution increases in both acid and basic melts; the same temp. and the same content of iron oxides the coeff. is higher in the basic furnace. The coeff. increases MgO content in the slag, and decreases with increase of SiO_2 content in slag and with rise of temp. In the basic furnace Cr is oxidized to chromic oxide and in acid furnace to chromous oxide. Alexis N. Pestoff

MT

APPROVED FOR RELEASE: 06/15/2000 CIA-RDP86-00513R001240020015-6"

"APPROVED FOR RELEASE: 06/15/2000 CIA-RDP86-00513R001240020015-6

PEREVERZEVA, Ye G., Engineer

"Distribution of Chromium Between Metal and Slag of Variable Composition." Sub 8 Feb 51, Moscow Order of the Labor Red Banner Inst of Steel imeni I. V. Stalin

Dissertations presented for science and engineering degrees in Moscow during 1951.

SO: Sum. No. 480, 9 May 55

APPROVED FOR RELEASE: 06/15/2000 CIA-RDP86-00513R001240020015-6"

"APPROVED FOR RELEASE: 06/15/2000 CIA-RDP86-00513R001240020015-6

STARK, B.V.; PEREVERZEVA, Ye.G.

Distribution of chromium between metal and slag of variable composition. Sbor.Inst.stali no.31:14-39 '53. (MIRA 9:9)

1.Chlen-korrespondent AN SSSR (for Stark).2.Kafedra teorii metallurgicheskikh protsessov.
(Chromium steel) (Slag)

APPROVED FOR RELEASE: 06/15/2000 CIA-RDP86-00513R001240020015-6"

"APPROVED FOR RELEASE: 06/15/2000 CIA-RDP86-00513R001240020015-6

S/137/60/000/010/006/040
A006/A001

Translation from: Referativnyy zhurnal, Metallurgiya, 1960, No. 10, p. 60, # 22882

AUTHORS: Skoblo, S.Ya., Dorokhov, V.I., Molotkov, V.A., Pereverzeva, Ye.G.

TITLE: Investigation of the Heterogeneity of 7-ton and 16.5-ton Killed Steel Sheet Ingots

PERIODICAL: Sb. nauchn. tr. Zhdanovsk. metallurg. in-t, 1960, No. 5, pp. 95-114

TEXT: Results are given of investigations of various indices showing the heterogeneity of killed СТ.3 (St.3) steel sheet ingots of 7-ton weight and of СТ.22К (St.22K) ingots of 16.5-ton weight. The steels were melted in a basic open-hearth furnace by the scrap-ore process. The 7-ton ingots were syphon-cast into a compact-bottom mold of H/D = 2.8 and 3 - 5% conicity. The 16.5-ton ingots were top-cast through an intermediate ladle with 2 buckets into an upward expanding through-mold of H/D = 2.4 and 1 - 3% conicity. The 7-ton ingots are characterized by a sharply marked axial (particularly in the middle portion of the height) and off-axial heterogeneity. The 16.5-ton ingots are characterized by a stronger axial and off-axial heterogeneity. The main defects of the ingot macro-structure

Card 1/2

APPROVED FOR RELEASE: 06/15/2000 CIA-RDP86-00513R001240020015-6"

"APPROVED FOR RELEASE: 06/15/2000 CIA-RDP86-00513R001240020015-6

SKOBLO, S.Ya.; KAZACHKOV, Ye.A.; PEREVERZEVA, Ye.G.; KIRYUSHKIN, Yu.I.; STRAKHOV, V.G.; SVIRIDENKO, F.F.; BUL'SKIY, M.T.; ALIMOV, A.G.

Quality of 9.75-ton rail-steel ingots. Metallurg 4 no.1:19 Ja '59. (MIRA 12:1)

1. Zhdanovskiy metallurgicheskiy institut i zavod "Azovstal'."
(Steel ingots) (Steel--Defects)

APPROVED FOR RELEASE: 06/15/2000 CIA-RDP86-00513R001240020015-6"

"APPROVED FOR RELEASE: 06/15/2000 CIA-RDP86-00513R001240020015-6

ZANNES, A.N.; SAPELKINA, O.R.; ZUBAREV, V.F.; DEMAKOVA, A.V.; PEREVERZEVA, Ye.G.

Effect of conditions of self-tempering and furnace tempering on the mechanical properties of rails hardened along their entire length by heating with high frequency currents. Izv. vys. ucheb. zav.; chern. met. 7 no.2:118-123 '64.
(MIRA 17:3)

1. Zavod "Azovstal'" i Zhdanovskiy metallurgicheskiy institut.

APPROVED FOR RELEASE: 06/15/2000 CIA-RDP86-00513R001240020015-6"

"APPROVED FOR RELEASE: 06/15/2000 CIA-RDP86-00513R001240020015-6

SOV/137-58-12-24176

Translation from: Referativnyy zhurnal. Metallurgiya, 1958, Nr 12, p 36 (USSR)

AUTHORS: Skoblo, S. Ya., Bul'skiy, M. T., Kiryushkin, Yu. I., Alimov, A. G., Pereverzeva, Ye. G., Sviridenko, F. F.

TITLE: Visual Slag Control in High-[illegible] Conversion (Vizual'nyy kontrol' shlaka fosforistogo peredela)

PERIODICAL: Sb. nauchn. tr. Zhdanovsk. metallurg. in-t, 1957, Nr 4, pp 61-76

ABSTRACT: The basicity and degree of oxidation of a slag cake cast into an iron sampler is estimated by the appearance of its upper and lower surface and its fracture. The basicity indicator chosen for open-hearth slags in conversion of high-phosphorus pig iron is $V_1 = CaO/SiO_2 + P_2O_5$. The % ratio of P_2O_5 and Fe to V_1 is empirically expressed in the form $P_2O_5\% = 68/V_1 + 2.5$, and $\Sigma(Fe) = 1.5 + 4V_1$. An analogous connection is established between the sum of P_2O_5 and SiO_2 and $\Sigma(Fe)$. Visual determination of V_1 makes it possible to determine P_2O_5 and $\Sigma(Fe)$ % in slags to an accuracy adequate for all practical purposes. Toward this end, a standard scale by slag sub-groups is established, permitting determination of V_1 to an accuracy of ± 0.2-$0.3V_1$. A description and photographs of slag cakes of various basicities i.

Card 1/2

APPROVED FOR RELEASE: 06/15/2000 CIA-RDP86-00513R001240020015-6"

"APPROVED FOR RELEASE: 06/15/2000 CIA-RDP86-00513R001240020015-6

SOV/137-58-12-24,76

Visual Slag Control in High-phosphorus Pig-iron Conversion

established, and the identifying characteristics of a slag cake permitting deformation of up to 0.03% P before deoxidation are presented.

Yu. K.

Card 2/2

APPROVED FOR RELEASE: 06/15/2000 CIA-RDP86-00513R001240020015-6"

"APPROVED FOR RELEASE: 06/15/2000 CIA-RDP86-00513R001240020015-6

S/137/62/000/003/162/191
A160/A101

12300

AUTHORS: Zubarev, V. F.; Pereverzeva, Ye. G., Demakova, A. V.; Tarasova, L. P.

TITLE: The effect of arsenic on the mechanical properties of welded joints of the МСТ3 (MSt.3) steel

PERIODICAL: Referativnyy zhurnal, Metallurgiya, no. 3, 1962, 6 - 7, abstract 3E39. (Sb. nauchn. tr. Zhdanovsk. metallurg. in-t, 1960, vyp. 6, 213 - 225)

TEXT: Investigations were conducted on the heterogeneity and mechanical properties of a welded joint of the MSt.3 arsenic steel. The investigations were carried out with metal cut out from different ingot parts, such as the upper, middle and lower part at a concentration of 0.14 - 0.26 % As and 0.14 - 0.22 % C. The tests yielded the following results: (1) The built-up metal of the welded joint considerably differs from the base metal as to its chemical composition. The content of Mn and Si in the built-up Me of the St3 killed steel increases in relation to the base metal 1.5 - 2 times, the content of C and As decreases 1.5 - - 2 times. (2) The content of Mn and Si in the built-up metal and in the killed

Card 1/3

APPROVED FOR RELEASE: 06/15/2000 CIA-RDP86-00513R001240020015-6"

"APPROVED FOR RELEASE: 06/15/2000 CIA-RDP86-00513R001240020015-6

S/137/62/000/003/162/191
A160/A101

The effect of arsenic on ....

of the MSt.3 steel with 0.26 % As possesses satisfactory mechanical properties.

V. Tarisova

[Abstracter's note: Complete translation]

Card 3/3

APPROVED FOR RELEASE: 06/15/2000 CIA-RDP86-00513R001240020015-6"

"APPROVED FOR RELEASE: 06/15/2000 CIA-RDP86-00513R001240020015-6

DEMAKOVA, A.V.; RYABUSHKIN, Yu.P.; TARASOVA, L.P.; TROFIMOVA, K.G.; PEREVERZEVA, Ye.G.

Structure of the metal in welded joints in MSt.3 arsenical steel. Avtom. svar. 14 no.5:11-19 My '61. (MIRA 14:5)

1. Zhdanovskiy metallurgicheskiy institut (for Demakova, Ryabushkin). 2. Zhdanovskiy zavod "Azovstal'" (for Tarasova). 3. Zhdanovskiy zavod tyazhelogo mashinostroyeniya (for Trofimova, Pereverzeva).
(Steel--Welding) (Welding--Testing)

APPROVED FOR RELEASE: 06/15/2000 CIA-RDP86-00513R001240020015-6"

"APPROVED FOR RELEASE: 06/15/2000 CIA-RDP86-00513R001240020015-6

S/185/61/006/003/009/010
D208/D302

9.4300(1136,1150,1151)

AUTHORS: Rybalka V V. and Pereverzyeva, A V

TITLE: Effect of heat treatment of Ge on its magneto resistance

PERIODICAL: Ukrayins kyy fizychnyy zhurnal. v. 6, no 3, 1961, 424-425

TEXT. It is important to study the behavior of semiconductors under heat treatment since the latter are used in instruments which undergo heating and cooling cycles Up to now, Ge under heat treatment was studied with respect to electrical conductivity and lifetime of the carriers T.V Mashovets, S M. Rybkin (Ref. 1· ZhTF, 25, 1530, 1955), and V.V Ostroborodova, S G. Kalashnikov (Ref, 2· ZhTF, 25, 1163 1955) In the present study, a specimen of Germanium is quenched and its magneto-resistance investigated Specimens of 15 x 4 x 2 mm^3 were cut out perpendicular to the growth axis of an n type Ge crystal with specific resistance ρ 19 ohm·cm. Then the specimens were polished with fine powder, immersed

Card 1/2

APPROVED FOR RELEASE: 06/15/2000 CIA-RDP86-00513R001240020015-6"

"APPROVED FOR RELEASE: 06/15/2000 CIA-RDP86-00513R001240020015-6

M

***Velocity of Decomposition of Ammonia by Thoriated Tungsten.** I. Motschan, I. Perevesenseff, and S. Roginsky (*Acta Physicochimica U.R.S.S.*, 1935, 2, 203-210).—[In German.] The presence of thorium is found to be without appreciable effect on the catalytic decomposition of ammonia at a tungsten surface. The mechanism of the decomposition is discussed. J. S. G. T.

ASM-SLA METALLURGICAL LITERATURE CLASSIFICATION

APPROVED FOR RELEASE: 06/15/2000 CIA-RDP86-00513R001240020015-6"

"APPROVED FOR RELEASE: 06/15/2000 CIA-RDP86-00513R001240020015-6

1ST AND 2ND ORDERS

PROCESSES AND PROPERTIES INDEX

3RD AND 4TH ORDERS

BC

a-1

Velocity of decomposition of ammonia on thoriated tungsten. I. Motschan, I. Perevesensev, and S. Roginski (Acta Physicochim. U.R.S.S., 1935, 2, 203—210).—The addition of Th to a W surface has no effect on the catalytic activity of W in the decomp. of NH_3. A. J. M.

ASM-SLA METALLURGICAL LITERATURE CLASSIFICATION

APPROVED FOR RELEASE: 06/15/2000 CIA-RDP86-00513R001240020015-6"

"APPROVED FOR RELEASE: 06/15/2000 CIA-RDP86-00513R001240020015-6

PROCESSES AND PROPERTIES INDEX

CA

2

Velocity of ammonia decomposition on thoriated tungsten. I. Mochan, I. Perevesenev and S. Roginskii. *Acta Physicochim. U. R. S. S.* 2, 203-10(1935)(in German).—The W wire was first carbonized by heating in the presence of naphthalene vapors. The amt. of Th on the surface, detd. by measurement of the thermionic emission, amounted to 0-90% of a unimol. layer for various expts. Since nitride formation changed the resistance of the wire, the temp. was measured by an optical pyrometer. The energy of activation is 42,500 cal. for both thoriated and nonthoriated carbonized W filaments over the temp. range 1200-1450°K. and at an NH_3 pressure of 4.7 mm. The velocity of the reaction is nearly the same in the presence or absence of Th. *Conclusion.*—The velocity deg. stage of the process, probably nitride decompn., takes place several at. distances inside the wire rather than in the thoriated surface layer. Cf. Hailes, *C. A.* 26, 23, and Kunsman, *C. A.* 22, 3818. F. H. R.

ASM-SLA METALLURGICAL LITERATURE CLASSIFICATION

APPROVED FOR RELEASE: 06/15/2000 CIA-RDP86-00513R001240020015-6"

"APPROVED FOR RELEASE: 06/15/2000 CIA-RDP86-00513R001240020015-6

1ST AND 2ND ORDERS

PROCESSES AND PROPERTIES INDEX

3RD AND 4TH ORDERS

15

Five percent magnesium arsenite as a seed disinfectant. M. S. Pereversentseva. *Plant Protection* (U. S. S. R.) 1935, 13 6(1935); *Rev. Applied Mycol.* 15, 565. Mg arsenite-talc dust (5%, contg. 4.7% As_2O_3), with the addn. of 3% Avidol as a sticker, was more toxic to wheat bunt spores (*Tilletia caries* and *T. foetens*) and gave (at the rates of 1 and 0.75 g. per kg. seed) a slightly better degree of field control of the disease than Davydoff's prepn. contg. 9.03% As_2O_3 used at the same rates. Both dusts stimulated germination. The Mg arsenite-talc dust reduced infection with proso millet artificially infected with smut (*Ustilago panici-miliacei*) from 61.8 to 5.4% and Davydoff's dust reduced it to 1.2%. O. R. S.

A50-SL4 METALLURGICAL LITERATURE CLASSIFICATION

APPROVED FOR RELEASE: 06/15/2000 CIA-RDP86-00513R001240020015-6"

"APPROVED FOR RELEASE: 06/15/2000 CIA-RDP86-00513R001240020015-6

1ST AND 2ND ORDERS

PROCESSES AND PROPERTIES INDEX

Ca

An automatic gas analyzer for NO_2 and NO. I. Perevezentsev and O. Orlov. *J. Chem. Ind.* (U. S. S. R.) 16, No. 7, 40-6(1939).—The colorimetric method of Kuz'minykh, Turkina and Popova (*C. A.* 30, 6139[9]) is adapted for automatic factory use with color readings by a Se photoelec. cell.

H. M. Leicester

ASM-SLA METALLURGICAL LITERATURE CLASSIFICATION

APPROVED FOR RELEASE: 06/15/2000 CIA-RDP86-00513R001240020015-6"

"APPROVED FOR RELEASE: 06/15/2000 CIA-RDP86-00513R001240020015-6

SKOBLO, S.Ya., kand.tekhn.nauk; BUL'SKIY, N.T., inzh.; KIRYUSHKIN, Yu.I., kand.tekhn.nauk; ALIMOV, A.G., inzh.; PEREVERZEVA, Ye.G., kand.tekhn. nauk; SVIRIDENKO, F.F., inzh.

Visual inspection of slag in the phosphorus converter process. Sbor.nauch.trud.Zhdan.met.inst. no.4:61-76 '57. (MIRA 11:11)
(Slag--Testing) (Phosphorus) (Converters)

APPROVED FOR RELEASE: 06/15/2000 CIA-RDP86-00513R001240020015-6"

"APPROVED FOR RELEASE: 06/15/2000 CIA-RDP86-00513R001240020015-6

SOV/130-59-1-8/21

AUTHORS: Skoblo S.Ya., Kazachkov Ye.A., ~~Pereverzeva Ye.G.~~, Kiryushkin Yu.I., Strakhov V.G., Sviridenko F.F., Bul'skiy M.T., and Alimov A.G.

TITLE: Quality of a Rail-Steel Ingot weighing 9.75 Tonnes (Kachestvo slitka rel'sovoy stali vesom 9.75 t)

PERIODICAL: Metallurg, 1959, Nr 1, p 19 (USSR)

ABSTRACT: At the "Azovstal'" works rail-steel ingot weight has been increased for 6.6 to 9.75 tonnes to increase casting-pit capacity and improve the utilization of rolling mill capacity. The authors give a brief description of the results of comparative investigations of large and small ingots. The quality was evaluated from sulphur prints of longitudinal ingot sections, from the macro-structure (with deep etching) of transverse strips, differences in the etching of samples from different zones of the ingot and distribution of segregated impurities and non-metallic inclusions in the ingot. Among the conclusions drawn are that the two ingot types are equal in physical,

Card 1/2

APPROVED FOR RELEASE: 06/15/2000 CIA-RDP86-00513R001240020015-6"

"APPROVED FOR RELEASE: 06/15/2000 CIA-RDP86-00513R001240020015-6

SOV/130-59-1-8/21

Quality of a Rail-Steel Ingot weighing 9.75 Tonnes

structural and chemical heterogeneity, the non-metallic inclusions in the large ingot do not exceed those in a sound 4.0-tonne rail-steel ingot; the amount of non-metallic inclusions, which greatly affect the mechanical properties, can be reduced by careful preparation of runner and ladle.

ASSOCIATION: Zhdanovskiy metallurgicheskiy institut (Zhdanov metallurgical institute) and the "Azovstal'" works

Card 2/2

APPROVED FOR RELEASE: 06/15/2000 CIA-RDP86-00513R001240020015-6"

"APPROVED FOR RELEASE: 06/15/2000 CIA-RDP86-00513R001240020015-6

GARMASH, V.A. (Moskva); PEREVERZEV-ORLOV, V.S. (Moskva); TSIRLIN, V.M. (Moskva)

Follow-up scanning system. Izv.AN SSSR. Otd. tekh. nauk Energ. i avtom no.1:166-170 Ja-F '61. (MIRA 14:3)
(Reading machines)
(Cybernetics)

APPROVED FOR RELEASE: 06/15/2000 CIA-RDP86-00513R001240020015-6"

"APPROVED FOR RELEASE: 06/15/2000 CIA-RDP86-00513R001240020015-6

PEREVESINSKIY, I.F.; KUZNETSOVA, A.P.; RAZUMOVSKIY, S.D.

Comprehensive processing of pyrolysis tar and of a heavy absorbent. (MIRA 14:4)
Khim. prom. no. 2:101-105 F '61.
(Coal tar products)

APPROVED FOR RELEASE: 06/15/2000 CIA-RDP86-00513R001240020015-6"

"APPROVED FOR RELEASE: 06/15/2000 CIA-RDP86-00513R001240020015-6

SKRIPOVA, Ye.A.; PEREVEZENTSEV, B.I.; GEL'D, P.V.

Calcium and aluminum distribution in lebeauite alloys according to the data of a local spectral analysis. Trudy Ural.politekh. inst. no.14:115-119 '61. (MIRA 16:6)
(Iron-silicon alloys--Spectra) (Calcium) (Aluminum)

APPROVED FOR RELEASE: 06/15/2000 CIA-RDP86-00513R001240020015-6"

"APPROVED FOR RELEASE: 06/15/2000 CIA-RDP86-00513R001240020015-6

PEREVEZENTSEV, B.N., inzh.; KOZLOV, V.V., inzh.

Welding titanium with copper-base alloys. Svar. proizv. no.9:18-19 S '64. (MIRA 17:12)

APPROVED FOR RELEASE: 06/15/2000 CIA-RDP86-00513R001240020015-6"

"APPROVED FOR RELEASE: 06/15/2000 CIA-RDP86-00513R001240020015-6

L 16296-65 EWT(m)/EWP(w)/EWA(d)/EWP(v)/EWP(t)/EWP(k)/EWP(b) Pf-4
IJP(c)/ASD(f)-2/ASD(m)-3 MJW/JD/HW
ACCESSION NR: AP4045722 S/0135/64/000/009/0018/0019

AUTHOR: Perevezentsev, B. N. (Engineer); Kozlov, V. V. (Engineer)

TITLE: Brazing of titanium to copper-base alloys

SOURCE: Svarochnoye proizvodstvo, no. 9, 1964, 18-19

TOPIC TAGS: titanium, OT4 titanium alloy, OT4 alloy brazing, silver base brazing alloy, optimum brazing conditions, brazed joint strength

ABSTRACT: An investigation has been made of the effect of the temperature and duration of brazing on the strength and ductility of the brazed joints between titanium OT4 alloy [U.S. RS11013] and Br.Kh 08 bronze. Brazing was done in a vacuum of $(5-8)\cdot10^{-2}$ or $5\cdot10^{-5}$ mm Hg, at a temperature varying from 800 to 860C and exposure time varying from 3 to 30 min. The surfaces to be brazed had no protective coating; three silver-base brazing alloys were used. The microhardness of the constituent phases and their distribution across the joint from titanium toward copper was the criterion of

Card 1/ 3

APPROVED FOR RELEASE: 06/15/2000 CIA-RDP86-00513R001240020015-6"

"APPROVED FOR RELEASE: 06/15/2000 CIA-RDP86-00513R001240020015-6

L 16296-65
ACCESSION NR: AP4045722

the joint ductility. In brazing with a PSr25 brazing alloy, the strongest joints with a tensile strength of 11—13.5 kg/mm^2 were obtained after a 5-min exposure at 820—830C. Under identical conditions brazing with a PSrMO 68-72-5 alloy produced sound ductile joints with a tensile strength of 14.5—17.5 kg/mm^2 and a shear strength of 13.5—16 kg/mm^2. The strongest joints with a tensile strength of 20—27 kg/mm^2 and a shear strength of 14.5—18 kg/mm^2 were obtained using foil of a PSr72 brazing alloy placed between the parts being joined. Most of the joints failed under a stress of 22—24 kg/mm^2. The rate at which the material is heated to the brazing temperature noticeably affects the strength of the joints; thus, with a heating rate of 30 and 10 deg/min, the strength of the joints is 27 and 20 kg/mm^2, respectively. The optimum temperature range and duration of brazing, 820—830C and 5 min, respectively, were the same as those for other brazing alloys. Orig. art. has: 6 figures.

ASSOCIATION: none

Card 2/3

APPROVED FOR RELEASE: 06/15/2000 CIA-RDP86-00513R001240020015-6"

"APPROVED FOR RELEASE: 06/15/2000 CIA-RDP86-00513R001240020015-6

L 16296-65
ACCESSION NR: AP4045722

0

SUBMITTED: 00 ENCL: 00

SUB CODE: MM, IE NO REF SOV: 000 OTHER: 000

Card 3/3

APPROVED FOR RELEASE: 06/15/2000 CIA-RDP86-00513R001240020015-6"

"APPROVED FOR RELEASE: 06/15/2000 CIA-RDP86-00513R001240020015-6

TKHORZHEVSKIY, V.P.; PEREVEZENTSEV, I.G.; MADISON, V.G., retsenzent; STROGANOV, L.P., inzh., red.

[Design of instruments for countries with a tropical climate] Konstruirovanie priborov dlia stran s tropicheskim klimatom. Izd.2., perer. i dop. Moskva, Izd-vo Mashinostroenie, 1964. 199 p. (MIRA 17:6)

APPROVED FOR RELEASE: 06/15/2000 CIA-RDP86-00513R001240020015-6"

"APPROVED FOR RELEASE: 06/15/2000 CIA-RDP86-00513R001240020015-6

PEREVEZENTSEV, I. G.

USSR/Processes and Equipment for Chemical Industries - Control and Measuring Devices. Automatic Regulation. K-2

Abs Jour : Ref Zhur - Khimiya, No 2, 1957, 7003

Author : Apakhov, A.I., Baleyev, A.V., Perevezentsev, I.G., Fialko G.M.

Inst :

Title : Automatic Regulation of Preparation of Nitrogen Oxides for Absorption in the Production of Sulfuric Acid by the Tower Process.

Orig Pub : Khim. prom-st', 1955, No 8, 475-477

Abstract : It is pointed out that automatic regulation of preparation of nitrogen oxides for absorption can be effected on the basis of NO_2 content of the gas after the last absorption tower. The NO_2 content is controlled by a photoelectric gas analyzer of continuous operation. In so doing the NO_2 content in the gas is set at such a concentration that only minimum losses of N_2 oxides with

Card 1/2

APPROVED FOR RELEASE: 06/15/2000 CIA-RDP86-00513R001240020015-6"

"APPROVED FOR RELEASE: 06/15/2000 CIA-RDP86-00513R001240020015-6

PEREVEZENTSEV, I. G.

PHASE I BOOK EXPLOITATION SOV/4839

Tkhorzhevskiy, Vladislav Pavlovich, and Ivan Gavrilovich Perevezentsev

Konstruirovaniye priborov dlya stran s tropicheskim klimatom (Design of Instruments for Countries With Tropical Climates) Moscow, Mashgiz, 1960. 153 p. 2,500 copies printed.

Reviewer: M.D. Kuzin; Ed.: Yu. M. Khlepetin; Executive Ed. (Ural-Siberian Department, Mashgiz): T.M. Somova, Engineer; Tech. Ed.: N.A. Dugina.

PURPOSE: This book is intended as a reference manual for technical personnel of factory and design offices.

COVERAGE: The book deals with experience gained in designing and rebuilding instruments for use in countries with tropical climates. The authors present basic rules for selecting instrument desigr and for matching materials used in production, and discuss the preservatior and packing of these instruments. Special features of manufacturing such instruments are also described. The authors have drawn upon their experience in designing instruments for use in India and Burma. No personalities are mentioned. There are 41 references: 30 Soviet, 6 English, 4 German, and 1 French.

~~Card 1/8~~

APPROVED FOR RELEASE: 06/15/2000 CIA-RDP86-00513R001240020015-6"

"APPROVED FOR RELEASE: 06/15/2000 CIA-RDP86-00513R001240020015-6

PEREVEZENTSEV, I. G.

An automatic regulation of nitrogen oxide preparation for absorption in the sulfuric acid chamber process. A. I. Anakhov, A. V. Baleev, I. G. Perevezentsev, and G. M. [illegible] Khim. Prom. [illegible] regulating system was devised based on the maintenance of NO_2 content in the off-gas at 0.04%. It has been incorporated in several H_2SO_4 chamber plants. W. M. S.

4

APPROVED FOR RELEASE: 06/15/2000 CIA-RDP86-00513R001240020015-6"

"APPROVED FOR RELEASE: 06/15/2000 CIA-RDP86-00513R001240020015-6

APAKHOV, A.I.; BALEYEV, A.V. [deceased]; PEREVEZENTSEV, I.G.; FIALKO, G.M.

Automatic regulation of the preparation of nitrogen oxides for absorption in the tower system for sulfuric acid. Khim.prom. no.8: 475-477 D '55. (MLRA 9:5)

1. Ural'skiy nauchno-issledovatel'skiy khimicheskiy institut UNIKhIM.

(Nitrogen oxides) (Automatic control)

APPROVED FOR RELEASE: 06/15/2000 CIA-RDP86-00513R001240020015-6"