"APPROVED FOR RELEASE: 07/13/2001 CIA-RDP86-00513R001341020013-6

to build blast furnaces in Novaya Tula, Cherepovets, Lipetsk, and Krivoy Rog was reduced by a new welding method for steel plates. Welding was mechanized up to 70%. Programming to automate the build-up welding of parts having complex shapes such as dies and punches was developed. The Institut metallokeramiki i spetsial'nykh splavov (Institute of Powder Metallurgy and Special Alloys) designed the first USSR powder-metallurgical (cermet) rolling mill of the type ПМ-2 (PM-2). Theoretical investigations to discover how the electron structure of metals, alloys, and poorly fusible compounds is related to their physicochemical and mechanical properties showed that it is possible to predict the properties of new materials and to produce materials having predetermined properties. Surface properties of liquid metals and alloys, and processes of wetting, penetration, and sintering were investigated. Methods of producing materials able to resist the effects of being in contact with poorly fusible metals up to 2000°C or those of being in zinc melts and zinc gas were developed. The technology of 14 poorly fusible compounds was studied, including the production of thermocouples for measuring temperatures in neutral and reducing media or in vacuo up to 2600°C, and in oxidizing media up to 1500°C. Achievements of the Institut kibernetiki

APPROVED FOR RELEASE: 07/13/2001 CIA-RDP86-00513R001341020013-6"

"APPROVED FOR RELEASE: 07/13/2001 CIA-RDP86-00513R001341020013-6

(Institute of Cybernetics) in the field of digital computers found practical use in the automation of more than 30 industrial plants. A widely applicable control mechanism and a quick-operating electronic computer were released for series production. The single-phase motors with condenser starter, developed by the Institut elektrotekhniki (Electrotechnical Institute), brought down the costs of agricultural electrification by 8-12%. A single-phase network for railroads reduces copper consumption for conductor lines by 50-66% and halves the number of transformers required. The Institut fizicheskoy khimii (Institute of Physical Chemistry) studied the hydrogenation of carbon oxide and dioxide with a nickel catalyst, the results from which are utilized for purifying a nitrogen-hydrogen mixture from carbon oxide and dioxide in the production of ammonia at the Lisichanskiy khimkombinat (Lisichansk Chemical Combine). The Institut organicheskoy khimii (Institute of Organic Chemistry) established the relations between the structure and the physical properties of synthesized cyanine dyes. Carbocyanines were successful. The relationship between the structure and light absorption of azacyanines was studied. Based on this experience, new dyestuff sensitizers for black-and-white and colored motion-picture films are being

APPROVED FOR RELEASE: 07/13/2001 CIA-RDP86-00513R001341020013-6"

"APPROVED FOR RELEASE: 07/13/2001 CIA-RDP86-00513R001341020013-6

used at the Shostkinskaya fabrika (Shostka Plant). By feeding cows with dry brewer's yeast, the microflora in the rumen was changed so as to increase the fat content of the milk by 0.4%. The criticism is made that sometimes not enough initiative is shown in introducing new achievements, thus the Dnepropetrovskoye parokhodstvo (Dnepropetrovsk Steamship Company) delays the introduction of freight programming developed by the Institute of Cybernetics, and the Kiyevskiy zavod meditsinskikh preparatov (Kiyev Plant of Medical Preparations) has not begun to produce "Mikrotsid", a raw material for producing glucose oxidase. A method of producing photocells developed by the Institut fiziki (Institute of Physics) is not yet used on an industrial scale and the same applies to an infrared spectrograph. Methods developed by the Institut ispol'zovaniya gaza (Institute of Gas Utilization) for heat treatment, infrared drying, and gas heating have not yet found wide application.

APPROVED FOR RELEASE: 07/13/2001 CIA-RDP86-00513R001341020013-6"

"APPROVED FOR RELEASE: 07/13/2001 CIA-RDP86-00513R001341020013-6

S/114/63/000/003/005/005
E191/E435

AUTHORS: Pisarenko, G.S., Corresponding Member of AS UkrSSR, Doctor of Technical Sciences, Professor,
Kozlov, I.A., Candidate of Technical Sciences,
Lebedev, I.V., Engineer

TITLE: Plastic deformation of a rotating disc

PERIODICAL: Energomashinostroyeniye, no.3, 1963, 26-28

TEXT: Reference is made to earlier experiments conducted and published by the two junior authors (Energomashinostroyeniye, no.2, 1960 and Teploenergetika, no.12, 1960) in which a carbon steel disc with a center bore was spun up. A radially flexible but torsionally stiff element inside the bore permitted almost unrestrained radial expansion of the disc. The yield stress was defined by a residual strain of 0.2%. The strains in the disc of 365 mm outside diameter and a uniform thickness of 20 mm were measured with wire strain gauges at speeds up to 18000 rpm. Strains are plotted against rpm for several points on the disc. Plastic deformation clearly begins where the plot becomes steep. A correlation is sought with the stress-strain diagram obtained in tensile tests. It is seen that the yield point obtained in

Card 1/2

APPROVED FOR RELEASE: 07/13/2001 CIA-RDP86-00513R001341020013-6"

"APPROVED FOR RELEASE: 07/13/2001 CIA-RDP86-00513R001341020013-6

S/114/63/000/003/005/005
E191/E435

Plastic deformation ...

this experiment, having regard to the stressing conditions and the accepted hypotheses about complex stresses under small elastoplastic deformations, is only slightly lower than the 0.2% residual strain definition. A comparison with an analytical computation in a graph of the spread of the plastic zone along the disc radius plotted against the rotational speed shows that the inner layers of the disc change into the plastic state much later and the outer layers much earlier than in accordance with analysis. The range of rotational speeds wherein the disc is in an elastoplastic state is in fact much smaller than in theory. An explanation is the redistribution of stresses which causes a departure from the linear stress/strain relationship ahead of the yield point. It follows that a safety factor derived as a ratio of the load at which residual stresses appear in the disc to the actual working load may be substantially misleading. It is pointed out that the approach of G.Weiss and V. Prager (Journal of the Aeronautical Sciences, no.3, 1954) based on a concept by which the entire radial cross-section of the disc moves bodily when the plastic deformation is reached, yields the best results for approximate stressing calculations. There are 5 figures.

Card 2/2

APPROVED FOR RELEASE: 07/13/2001 CIA-RDP86-00513R001341020013-6"

"APPROVED FOR RELEASE: 07/13/2001 CIA-RDP86-00513R001341020013-6

Pisarenko, G.S.

G.S. Pisarenko and others. Mechanical properties of refractory materials in the 20-3000C range.

Title: Seminar on refractory metals, compounds, and alloys (Kiev, April 1963).

Source: Atomnaya energiya, v. 15, no. 3, 1963, 266-267

APPROVED FOR RELEASE: 07/13/2001 CIA-RDP86-00513R001341020013-6"

"APPROVED FOR RELEASE: 07/13/2001 CIA-RDP86-00513R001341020013-6

PISARENKO, G.S.

Methods and testing machines used for studying the mechanical characteristics of materials at high temperatures. Zav.lab. 29 no.3:364-370 '63. (MIRA 16:2)
(Metals at high temperatures)
(Testing machines)

APPROVED FOR RELEASE: 07/13/2001 CIA-RDP86-00513R001341020013-6"

"APPROVED FOR RELEASE: 07/13/2001 CIA-RDP86-00513R001341020013-6

PISARENKO, G. S.

Application of scientific achievements in production; experience gained by the Academy of Sciences of the Ukrainian S.S.R. Vest. AN SSSR 33 no.1:45-50 Ja '63. (MIRA 16:1)

1. Chlen-korrespondent AN UkrSSR, glavnyy uchenyy sekretar' AN UkrSSR.

(Research, Industrial)

APPROVED FOR RELEASE: 07/13/2001 CIA-RDP86-00513R001341020013-6"

"APPROVED FOR RELEASE: 07/13/2001 CIA-RDP86-00513R001341020013-6

BLYAKHEROVA, L.M.; [illegible]

[illegible] wheat [illegible]

[illegible] Ministerstv [illegible] institut zerna i produkt [illegible]

APPROVED FOR RELEASE: 07/13/2001 CIA-RDP86-00513R001341020013-6"

"APPROVED FOR RELEASE: 07/13/2001 CIA-RDP86-00513R001341020013-6

PIGALENKO, Georgiy [illegible]; [illegible] Andreyevich;
KVITKA, [illegible]; [illegible]
[illegible], [illegible] Pomorovich; [illegible]

[Course on the strength of [illegible]; [illegible] materialov. [illegible] 407 p.
[illegible]

[illegible]

APPROVED FOR RELEASE: 07/13/2001 CIA-RDP86-00513R001341020013-6"

"APPROVED FOR RELEASE: 07/13/2001 CIA-RDP86-00513R001341020013-6

L 63817-65

ACCESSION NR: AT5007857 S/0000/64/000/000/0023/0045

23
B+1

AUTHOR: Pisarenko, G. S.; Troshchenko, V. T.; Gryaznov, B. A.

TITLE: Fatigue and static crack strength of brittle cermet materials

SOURCE: Nauchno-tekhnicheskoye obshchestvo mashinostroitel'noy promyshlennosti. Tsentral'noye pravleniye. Voprosy mekhanicheskoy ustalosti (Problems in mechanical fatigue), Moscow, Izd-vo Mashinostroyeniye, 1964, 23-45

TOPIC TAGS: fatigue, static crack strength, cermet, brittle fracture, fatigue crack, silicon carbide, chromium carbide

ABSTRACT: This article cites the results of investigations into the static crack strength and fatigue of two classes of cermet materials: those having appreciable porosity and manufactured on a base of ductile components, and materials whose base consists of silicon and chromium carbides. In the investigation of materials having a base of ductile metals (Fe), the porosity was varied, while in the case of materials on a base of carbides, the binder content was varied. Specimens of varying size were tested. It was found that the strength of cermet materials decreased with an increase in their size both at normal and at elevated

Card 1/3

APPROVED FOR RELEASE: 07/13/2001 CIA-RDP86-00513R001341020013-6"

"APPROVED FOR RELEASE: 07/13/2001 CIA-RDP86-00513R001341020013-6

L 63817-65
ACCESSION NR: AT5007857

temperatures. The investigations also showed that the type of loading (bending with a concentrated force, pure bending, extension) had a substantial effect on the strength characteristics, the strength on bending with a concentrated force being higher than with pure bending and the lowest values of the strength characteristics being observed during tension. A characteristic feature of certain brittle cermet materials is their comparative insensitivity to stress concentrations in the complete absence of ductility. All the regularities noted (the considerable scatter of strength characteristics, the effect of absolute size and type of loading on strength, the comparatively low sensitivity to stress concentrations, and the increase in the strength characteristics with increasing temperature) can be explained by statistical theories of strength based on the "weak link" hypothesis, in particular on Weibull's theory. The results from investigations of the effect of loading rates on strength (ranging from 0.01 to 1000 kg/mm^2 sec) show that the strength of carbide-base materials increases with an increase in loading rate, whereas the strength of iron-base porous materials hardly changes. The static crack strength drops with an increase in porosity. Orig. art. has: 14 formulas, 5 tables and 23 figures.

Card 2/3

APPROVED FOR RELEASE: 07/13/2001 CIA-RDP86-00513R001341020013-6"

"APPROVED FOR RELEASE: 07/13/2001 CIA-RDP86-00513R001341020013-6

L 63817-65

ACCESSION NR: AT5007857

ASSOCIATION: None

SUBMITTED: 02Oct64 ENCL: 00 SUB CODE: NM, MT

NO REF SOV: 016 OTHER: 004

Card 3/3

APPROVED FOR RELEASE: 07/13/2001 CIA-RDP86-00513R001341020013-6"

"APPROVED FOR RELEASE: 07/13/2001 CIA-RDP86-00513R001341020013-6

L 57516-65 EWP(e)/EWT(m)/EWP(w)/EWP(i)/EPF(n)-2/EWG(m)/EWA(d)/EPR/T/EWP(t)/EWP(k)/EWP(z)/EWP(b) Pf-4/Ps-4/Pu-4 IJP(c) JD/JG/AT/WH

ACCESSION NR: AR5013024 UR/0137/65/000/004/I073/I073
669.275.018.25

SOURCE: Ref. zh. Metallurgiya, Abs. 4I465

AUTHOR: Pisarenko, G. S.; Rudenko, V. N.; Borisenko, V. A.; Kashtalyan, Yu. A.; Kharchenko, V. K.

TITLE: Investigation of the high-temperature strength of refractory powder metal materials

CITED SOURCE: Tr. 7 Vses. nauchno-tekhn. konferentsii po poroshk. metallurgii. Yerrvan, 1964, 50-54

TOPIC TAGS: powder metallurgy, metal mechanical property, tungsten, niobium carbide

TRANSLATION: The strength, hardness and elastic characteristics of W and NbC up to 3300°K were studied using special equipment developed in the Institute of Powder Metallurgy and Special Alloys of the Academy of Sciences SSSR and the Institute of Powder Metallurgy of the Academy of Sciences UkrSSR. An intense drop in the sgrength of W begins at 1270°K. The strength of cast W is higher than that of pow-

Card 1/2

APPROVED FOR RELEASE: 07/13/2001 CIA-RDP86-00513R001341020013-6"

"APPROVED FOR RELEASE: 07/13/2001 CIA-RDP86-00513R001341020013-6

L 57516-65
ACCESSION NR: AR5013024

der metal W at 2270°K. The long-time hardness is in agreement with Shishokin's expression, $H = at^n$. The E modulus at 2470°K is 2.45×10^5 Mn/m^2. The G modulus at 1770°K is 1.8×10^5 Mn/m^2. The maximum bend strength of NbC is at a temperature of 0.5-0.6 of the melting point. The effect of porosity on strength decreases at high temperatures. The temperature dependence of E is presented. V. Kishinevskiy.

SUB CODE: MM ENCL: 00

Card 2/2

APPROVED FOR RELEASE: 07/13/2001 CIA-RDP86-00513R001341020013-6"

"APPROVED FOR RELEASE: 07/13/2001 CIA-RDP86-00513R001341020013-6

ISARENKO, [illegible] S. [Ysarenko, [illegible] S.], LEBEDEV, A. A. [Lebediev, A. [illegible]]

Criteria of the strength of materials. Dop. AN [illegible] no. 1, [illegible]-62 [illegible]4. MIRA 1[illegible]:4)

1. Institut metallokeramiki i spetsial'nykh splavov AN UkrSSR. 2. Chlen-korrespondent AN UkrSSR (for Pisarenko).

APPROVED FOR RELEASE: 07/13/2001 CIA-RDP86-00513R001341020013-6"

"APPROVED FOR RELEASE: 07/13/2001 CIA-RDP86-00513R001341020013-6

L 13246-65 EWT(m)/EWP(e)/EWP(w)/EWA(d)/EWP(t)/EWP(k)/EWP(b) Pf-4 SSD/AFWL/ASD(f)-2/AFETR JD/WH

ACCESSION NR: AT4046757 S/Z/0000/64/000/000/0067/0082

AUTHOR: Pisarenko, G. S.; Troscenko, V. T. (Troshchenko, T. V.) 8

TITLE: Mechanical properties of sintered powder materials

SOURCE: Medzinarodna konferencia o praskovej metalurgii. 1st, 1962. Problemy praskovej metalurgie; sbornik vedeckych prac (Problems in powder metallurgy; collection of scientific papers). Bratislava, Vyd-vo SAV, 1964, 67-82

TOPIC TAGS: brittle material, plastic material, property, stress, fracture phenomenon

ABSTRACT: Metal-powder materials can be divided into two main classes from the standpoint of their mechanical properties: brittle metal-ceramic materials and porous materials made of plastic constituents. The first class of materials is characterized by a considerable dispersion of properties, by the influence of size and sort of stress upon the strength, and by increasing strength with increasing temperature. These facts are in accordance with the results of the statistical theory of strength. Laws governing the fracture phenomena of the second class of materials can be explained taking into consideration the reduc-

Card 1/2

APPROVED FOR RELEASE: 07/13/2001 CIA-RDP86-00513R001341020013-6"

"APPROVED FOR RELEASE: 07/13/2001 CIA-RDP86-00513R001341020013-6

ACCESSION NR: AP4046757

tion of cross-sectional area by pores and the heterogeneity of stress in cross section which, as a rule, increases with increasing temperature. Orig. art. has: 21 formulas and 12 figures.

ASSOCIATION: Institut metallokeramiki i spetsial'nykh splavov AN UkrSSR, Kiev (Institute of Powder Metallurgy and Special Alloys, AN UkrSSR)

SUBMITTED: 00 ENCL: 00 SUB CODE: MM

NO REF SOV: 012 OTHER: 006

Card 2/2

APPROVED FOR RELEASE: 07/13/2001 CIA-RDP86-00513R001341020013-6"

"APPROVED FOR RELEASE: 07/13/2001 CIA-RDP86-00513R001341020013-6

PISARENKO, G.S.; VDOVENKO, V.V.; [illegible], V.A.; GRYAZNOV, N.A.; [illegible], L.V.; KURIAT, R.I.; [illegible], I.N.

System for testing materials in a high-temperature flow. Energ. i elektrotekh. prom. no.4:[illegible] [illegible] '6[illegible].

(MIRA 18:3)

APPROVED FOR RELEASE: 07/13/2001 CIA-RDP86-00513R001341020013-6"

"APPROVED FOR RELEASE: 07/13/2001 CIA-RDP86-00513R001341020013-6

L 40320-65 EWT(m)/EWP(w)/EWA(d)/EPR/T/EWP(t)/EWP(b) JD/EM
ACCESSION NR: AP4042820 S/0021/64/000/007/0893/0896

AUTHOR: Pysarenko, G. S. (Pisarenko, G. S.) (Corresponding member AN UkrSSR); Mozharovs'kyy, M. S. (Mozharovskiy, N. S.)

TITLE: Hysteresis energy as the basic criterion of metal failure in cyclic uniaxial thermal loading

SOURCE: AN UkrSSR. Dopovidi, no. 7, 1964, 893-896

TOPIC TAGS: metal fatigue, metal failure, hysteresis energy, metal failure criterion, irreversible absorption energy, elastic hysteresis, stress, strain, deformation, uniaxial thermal loading

ABSTRACT: The basic regularities of thermal fatigue are discussed and formulas for irreversible absorbed energy, hysteresis energy, heating-cooling cycle, total accumulation of irreversible absorbed energy at complete thermal fatigue, and relationship between total accumulation prior to complete thermal fatigue are derived. It is shown that the specific irreversible absorbed energy in the area of the hysteresis loop which takes into account stress and deformation must be considered the basic criterion of metal failure in cycle thermal loading. Orig. art. has: 19 formulas and 3 figures.

Card 1/2

APPROVED FOR RELEASE: 07/13/2001 CIA-RDP86-00513R001341020013-6"

"APPROVED FOR RELEASE: 07/13/2001 CIA-RDP86-00513R001341020013-6

L 40320-65

ACCESSION NR: AP4042820

ASSOCIATION: Instytut metalokeramiky i spetsial'nykh splaviv AN URSR (Institute of Powder Metallurgy and Special Alloys, AN URSR)

SUBMITTED: 02Jan64 ENCL: 00 SUB CODE: MM

NO REF SOV: 003 OTHER: 000

Card 2/2

APPROVED FOR RELEASE: 07/13/2001 CIA-RDP86-00513R001341020013-6"

"APPROVED FOR RELEASE: 07/13/2001 CIA-RDP86-00513R001341020013-6

PISARENKO, G.S. [Pysarenko, H.S.], [illegible]; KOZLOV, I.A.

Investigating the [illegible] rotating disks in the region of very small elastoplastic [illegible]formations. Dop. AN URSR no.9: 1159-1162 '64. (MIRA 17:11)

1. Institut problem [illegible]nosti AN UkrSSR. 2. AN UkrSSR (for Pisarenko).

APPROVED FOR RELEASE: 07/13/2001 CIA-RDP86-00513R001341020013-6"

"APPROVED FOR RELEASE: 07/13/2001 CIA-RDP86-00513R001341020013-6

VAYNBERG, David Veniaminovich; PISARENKO, Georgiy Stepanovich; KREMENTULO, V.V., red.

[Mechanical vibrations and their role in technology] Mekhanicheskie kolebaniia i ikh rol' v tekhnike. Izd.2., perer. i dop. Moskva, Nauka, 1965. 275 p.
(MIRA 18:7)

APPROVED FOR RELEASE: 07/13/2001 CIA-RDP86-00513R001341020013-6"

"APPROVED FOR RELEASE: 07/13/2001 CIA-RDP86-00513R001341020013-6

L 22998-66 EWT(d)/EWT(m)/EWP(w)/EPF(n)-2/EWP(v)/T/EWP(t)/EWP(k)/EWP(h)/EWP(l)
ACC NR: AT6008643 JD/JG/GS (A) SOURCE CODE: UR/0000/65/000/000/0007/0013

AUTHORS: Pisarenko, G. S. (Academician AN UkrSSR) (Kiev); Kharchenko, V. K. (Kiev); Dubinin, V. P. (Kiev); Borisenko, V. A. (Kiev); Kashtalyan, Yu. A. (Kiev)

ORG: none

TITLE: Investigation of mechanical properties of high-melting materials at high temperatures in a vacuum and in an inert medium

SOURCE: Vsesoyuznoye soveshchaniye po voprosam staticheskoy i dinamicheskoy prochnosti materialov i konstruktsionnykh elementov pri vysokikh i nizkikh temperaturakh, 3d. Termoprochnost' materialov i konstruktsionnykh elementov (Thermal strength of materials and construction elements); materialy soveshchaniya. Kiev, Naukova dumka, 1965, 7-13

TOPIC TAGS: tungsten, niobium, elastic modulus, elastic stress, elastic deformation, metallurgic testing machine/ UVT-1 metallurgic testing machine, UVT-2 metallurgic testing machine

ABSTRACT: An experimental testing chamber for testing the mechanical properties of high-melting metals in a vacuum and in an inert medium at high temperatures has been developed (see Fig. 1). The temperature dependence of the modulus of elasticity, strength limit, and hardness limit of tungsten and molybdenum were determined. The experimental results are presented graphically (see Fig. 2). It was found that the strength and hardness limit obeyed the expressions of Frantsevich-Vrontskiy and

Card 1/3

APPROVED FOR RELEASE: 07/13/2001 CIA-RDP86-00513R001341020013-6"

"APPROVED FOR RELEASE: 07/13/2001 CIA-RDP86-00513R001341020013-6

L 22998-66
ACC NR: AT6008643

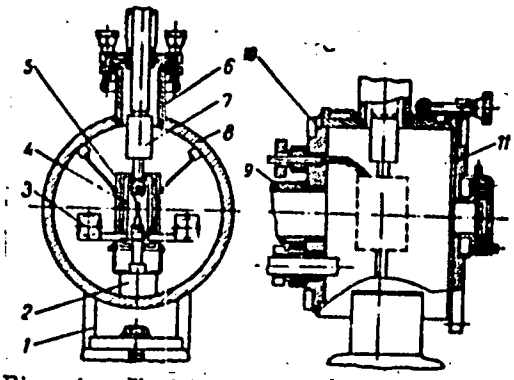

Fig. 1. Working chamber of the installation VTU-2V. 1 - foundation plate; 2 - clamps; 3 - current leads; 4 - specimen; 5 - heating installation; 6 - chamber top; 7 - hinged installation; 8 - body of chamber; 9 - exhaust nozzle; 10 - back cover; 11 - front cover.

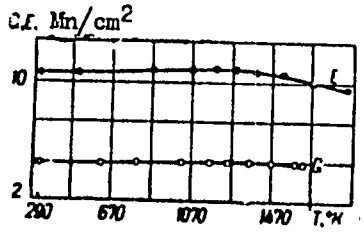

Fig. 2. Dependence of elasticity characteristics of niobium on the temperature. E and G - elastic modulus of the first and second kind respectively.

Ito-Shishokin, shown as $\sigma_n = m_n \sigma_0 e^{-\beta_n T}$, $H = k_n H_0 e^{-\alpha_n T}$,

where T is the temperature in degrees K, σ_0 and H_0 are the values of the strength and hardness limit at OK, β_n and α_n are the temperature coefficients of the strength

Card 2/3

APPROVED FOR RELEASE: 07/13/2001 CIA-RDP86-00513R001341020013-6"

"APPROVED FOR RELEASE: 07/13/2001 CIA-RDP86-00513R001341020013-6

L 22298-66

ACC NR: AT6008643

and hardness limit, and m_n and k_n are constants. It is concluded that the maximum in the logarithmic decrement of oscillations in niobium at 570K, first observed by M. G. Lozinskiy and A. Ye. Fedorovskiy, is related to the penetration of impurities into the niobium lattice. Orig. art. has: 8 graphs and 3 equations.

SUB CODE: 11/ SUBM DATE: 19Aug65/ ORIG REF: 010/ OTH REF: 001

Card 3/3

APPROVED FOR RELEASE: 07/13/2001 CIA-RDP86-00513R001341020013-6"

"APPROVED FOR RELEASE: 07/13/2001 CIA-RDP86-00513R001341020013-6

L 22074-66 EWP(e)/EWT(m)/EWP(v)/T/EWP(t)/ETC(m)-6/EWA(1) LJP(c) IG/WW/
ACC NR: AT6008654 (A) GS/RM/WH SOURCE CODE: UR/0000/65/000/000/0106/0112

AUTHORS: Lyashenko, B. A. (Kiev); Pisarenko, G. S. (Academician AN UkrSSR) (Kiev); Isakhanov, G. V. (Kiev)

ORG: none

TITLE: On the determining of the mechanical properties of laminated plastics in conditions of one-sided surface heating

SOURCE: Vsesoyuznoye soveshchaniye po voprosam staticheskoy i dinamicheskoy prochnosti materialov i konstruktsionnykh elementov pri vysokikh i nizkikh temperaturakh, 3d. Termoprochnost' materialov i konstruktsionnykh elementov (Thermal strength of materials and construction elements); materialy soveshchaniya. Kiev, Naukova dumka, 1965, 106-112

TOPIC TAGS: glass textolite, glass product, material testing, thermal property, heat stability/ KAST glass textolite

ABSTRACT: The results of testing the mechanical properties of glass textolite of type KAST under surface heating are presented. The tests were conducted in conditions of pure shear on specimens of dimensions 11 x 11 x 150 mm. Heat currents used varied in the range of 840--2100 kv/m^2. One-sided surface heating was performed by generating an electrical current through the carbonized layer of the tested glass plastic according to a method developed in the Institute of Problems of Material Behavior, AN UkrSSR (Institut problem materialovedeniya AN UkrSSR), and is described by B. A. Lyashenko and

Card 1/3

APPROVED FOR RELEASE: 07/13/2001 CIA-RDP86-00513R001341020013-6"

"APPROVED FOR RELEASE: 07/13/2001 CIA-RDP86-00513R001341020013-6

L 22974-66
ACC NR: AT6008654

G. V. Isakhanov (sb. Voprosy vysokotemperaturnoy prochnosti v mashinostroyenii, K., Izd-vo AN UkrSSR, 1963). Factors identified as affecting the bearing capacity of a specimen at a given instant are: 1) the depth of the zone of material with the reference (base) properties, 2) the variation of the elastic constants in the zone of the base material under increasing temperature in that zone, 3) the strength of zone of pyrolysis and of the carbonized zone, their dimensions and position relative to the neutral axis under shear, 4) thermal stress in the pyrolysis zone and in the carbonized layers, and 5) stress in the carbonized zone caused by internal pressure from gaseous products of pyrolysis. Plots are given showing the experimental results; for example, Fig. 1 shows the variation of bearing capacity with heating duration for parametric values of individual heat currents.

Card 2/3

APPROVED FOR RELEASE: 07/13/2001 CIA-RDP86-00513R001341020013-6"

"APPROVED FOR RELEASE: 07/13/2001 CIA-RDP86-00513R001341020013-6

L 22974-66

ACC NR: AT6008654

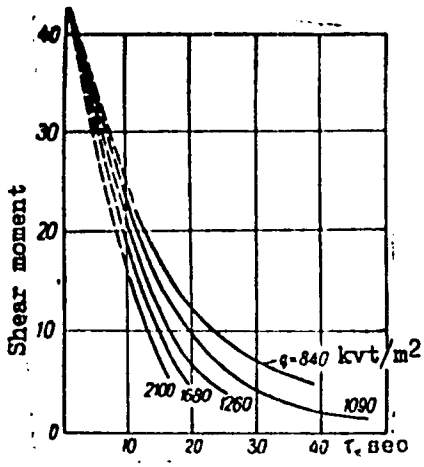

Fig. 1. The variation of bearing capacity with individual heat currents and duration of heating.

Kast

Orig. art. has: 5 figures and 7 equations.

SUB CODE: 11/ SUBM DATE: 19Aug65/ ORIG REF: 002/ OTH REF: 001

Card 3/3

APPROVED FOR RELEASE: 07/13/2001 CIA-RDP86-00513R001341020013-6"

"APPROVED FOR RELEASE: 07/13/2001 CIA-RDP86-00513R001341020013-6

L 21818-66 EWT(d)/EWT(m)/EWP(w)/EWA(d)/EWP(v)/T/EWP(t)/EWI(... IJP(c)

ACC NR: AT6008660 (N) SOURCE CODE: UR/0000/65/000/000/0160/0169

EM/JD/HW/GS

AUTHORS: Dugay, V. I. (Kiev); Pisarenko, G. S. (Academician AN UkrSSR) (Kiev); Troshchenko, V. T. (Kiev)

ORG: none

TITLE: A study of inelastic deformations in metals under cyclic deformation

SOURCE: Vsesoyuznoye soveshchaniye po voprosam staticheskoy i dinamicheskoy prochnosti materialov i konstruktsionnykh elementov pri vysokikh i nizkikh temperaturakh, 3d. Termoprochnost' materialov i konstruktsionnykh elementov (Thermal strength of materials and construction elements); materialy soveshchaniya. Kiev, Naukova dumka, 1965, 160-169

TOPIC TAGS: fatigue strength, metal stress, strain, plastic deformation, hysteresis loop, copper, steel / 45 steel, 25 steel, 20Kh steel, EI726 steel, 1Kh18N10T steel, TsDM PU-10 testing machine, circuit design

ABSTRACT: The course of plastic deformations in metals and alloys as a function of the stresses and number of loading cycles is studied. The work was done to obtain criteria for the fatigue strength of materials. A system developed earlier by V. T. Troshchenko (Novyye mashiny i probory dlya ispytaniya metallov, M., Metallurgizdat, 1963) underlies the method. The 10-ton East German TsDM PU-10 machine was used for mechanical loading of up to $P_a = \pm 49$ kN. The frequency can be varied smoothly from

Card 1/3

APPROVED FOR RELEASE: 07/13/2001 CIA-RDP86-00513R001341020013-6"

"APPROVED FOR RELEASE: 07/13/2001 CIA-RDP86-00513R001341020013-6

L 21818-66

ACC NR: AT6008660

500 to 2000 cycles per minute. A dynamic hysteresis loop in coordinates proportional to σ and ε is obtained on the screen of an oscillograph during testing (see Fig. 1).

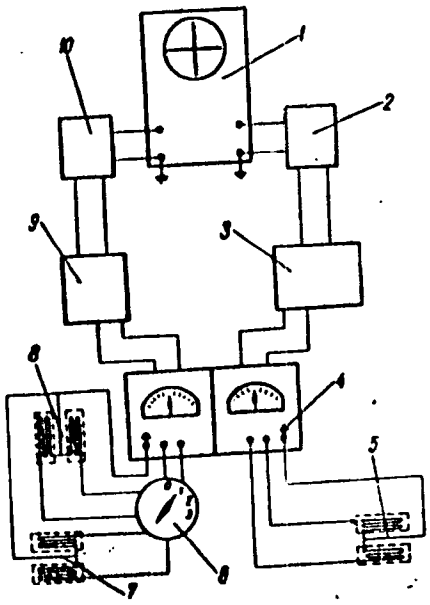

Fig. 1. Circuit for recording dynamic hysteresis loops with cyclic variable loading: 1 - oscillograph; 2, 10 - filters; 3 - amplifier; 4 - tensostation; 6 - PMT switch; 5, 7, 8, 9 - resistance pickups.

Card 2/3

APPROVED FOR RELEASE: 07/13/2001 CIA-RDP86-00513R001341020013-6"

"APPROVED FOR RELEASE: 07/13/2001 CIA-RDP86-00513R001341020013-6

L 21818-66

ACC NR: AT6008660

Copper and 45, 25, 20Kh, EI726, and 1Kh18N10T steels were tested (see Fig. 2).

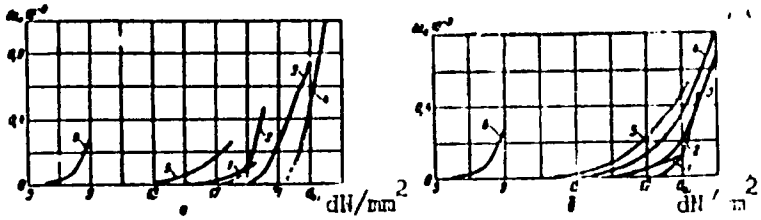

Fig. 2. Change in width of hysteresis loop versus stress: a - first loading; b - second loading; 1 - EI726; 2 - 25 steel; 3 - 20Kh steel; 4 - 45 steel; 5 - 1Kh18N10T steel; 6 - copper.

With cyclic stress and strain, opening of the hysteresis loop for the steels tested is observed with much smaller stresses than with static loading. For the steels, with stresses exceeding the fatigue limit, the width of the hysteresis loop increases regularly with the number of loading cycles until destruction of the specimen. Orig. art. has: 2 diagrams, 3 graphs, 2 photographs, 2 tables, and 4 formulas.

SUB CODE: 20, 11/SUBM DATE: 19Aug65/ ORIG REF: 002

Card 3/3

APPROVED FOR RELEASE: 07/13/2001 CIA-RDP86-00513R001341020013-6"

"APPROVED FOR RELEASE: 07/13/2001 CIA-RDP86-00513R001341020013-6

PISARENKO, G.S. [Pysarenko, H.S.], akademik; TROSHCHENKO, V.T.; BUGAY, V.I. [Buhai, V.I.]

Correlation between the values of the fatigue limit and the strength characteristics of metals. Dop. AN URSR no. [illegible] 190[illegible]. MIRA [illegible]

1. Institut problem materialovedeniya AN UkrSSR.
2. AN UkrSSR (for Pisarenko).

APPROVED FOR RELEASE: 07/13/2001 CIA-RDP86-00513R001341020013-6"

"APPROVED FOR RELEASE: 07/13/2001 CIA-RDP86-00513R001341020013-6

L 5437-66 EWT(M)/EWP(w)/EWP(v)/T-2/EWP(k)/EIC(m) WW/EW

ACC NR: AP5024782 SOURCE CODE: UR/0021/65/000/009/1157/1160 39 B

AUTHOR: Pysarenko, H. S.—Pisarenko, G. S. (Academician AN UkrSSR); Bazhenov, V. H.—Bazhenov, V. G.; Koziov, T. A.

ORG: Institute of the Problems of the Science of Materials, AN URSR (Instytut problem materialoznavstva AN URSR)

TITLE: The stress concentration around eccentric openings in operating turbine and pump disks 21

SOURCE: AN UkrRSR. Dopovidi, no. 9, 1965, 1157-1160

TOPIC TAGS: turbine disk, 21 disk opening, stress concentration, stress calculation, stress

ABSTRACT: Theoretical formulas presently used to calculate the stress concentration around circular openings located in a rotating turbine or a pump disk at a distance from its center are analyzed and compared with formulas derived from experimental data. Theoretical values of the stress-concentration factor were as much as 30—34% lower than the experimental values, regardless of the diameter of the openings or their distance from the disk center or rim. On the basis of the experimental data, corrective coefficients for calculating the radial and tangential stress concentrations were derived which reduced the difference between the theoretical and experimental values of the

Card 1/2 090106

APPROVED FOR RELEASE: 07/13/2001 CIA-RDP86-00513R001341020013-6"

"APPROVED FOR RELEASE: 07/13/2001 CIA-RDP86-00513R001341020013-6

L 5437-6

ACC NR: AP5024782

stress concentration to 17—30%. Thus even improved formulas cannot be used to calculate all the factors which affect the stresses near an eccentric opening. Thus it can be concluded that in an operating rotating turbine or pump disk, a maximum stress concentration can appear at any point of an eccentric opening, depending on the location of openings and the effect of various other factors. Orig. art. has: 1 figure and 10 formulas. [MS]

SUB CODE: PR,IE/ SUBM DATE: 26Oct64/ ORIG REF: 001/ OTH REF: 001/

ATD PRESS: 4133

Card 2/2

APPROVED FOR RELEASE: 07/13/2001 CIA-RDP86-00513R001341020013-6"

"APPROVED FOR RELEASE: 07/13/2001 CIA-RDP86-00513R001341020013-6

TRET'YACHENKO, G.N. [Tret'iachenko, H.M.]; PISARENKO, G.S. [Pysarenko, H.S.]

Cooling of a symmetric sandwich plate under boundary conditions of the first kind. Dop. AN URSR no.9:1166-1170 '62. (MIRA 18:4)

1. Institut metallokeramiki i spetsial'nykh splavov AN UkrSSR.
2. Chlen-korrespondent AN UkrSSR (for Pisarenko).

APPROVED FOR RELEASE: 07/13/2001 CIA-RDP86-00513R001341020013-6"

"APPROVED FOR RELEASE: 07/13/2001 CIA-RDP86-00513R001341020013-6

L 31552-66 EWT(d)/EWT(m)/EWP(w) IJP(c) EM

ACC NR: AP6002645 SOURCE CODE: UR/0021/65/000/011/1443/1446

AUTHOR: Stepanov, H. V. — Stepanov, G. V.; Pysarenko, H. S. — Pisarenko, G. S. (Academician, AN UkrSSR)

ORG: Institute of Problems of Material Science, AN URSR (Instytut problem materialoznavstva AN URSR)

TITLE: Approximate method of calculating the velocity of solid particles accelerated with a light-gas gun

SOURCE: AN UkrSSR. Dopovidi, no. 11, 1965, 1443-1446

TOPIC TAGS: hypervelocity impact, light gas gun

ABSTRACT: A simple, two-stage, light-gas gun for accelerating differently shaped solid particles to high velocities has been designed and built. The gun (Fig. 1) consists of explosion chamber 1 separated

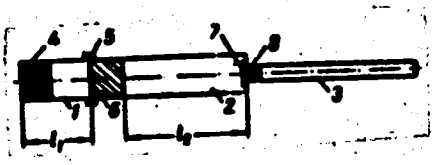

Fig. 1. Diagram of the light-gas gun.

Card 1/2

[illegible] and "shoots" the piston along the compression chamber. Because of the piston kinetic energy, the light-gas pressure reaches a magnitude one order higher than that of the pressure of [illegible] products, breaks down diaphragm 7 and accelerates solid particle 8 to a very high velocity along barrel 3. The article offers a method for approximate calculation of the motion of the piston up to the moment of the breakdown of the second diaphragm and the motion of the accelerated particle. The data calculated by the suggested method agree fairly well (deviations do not exceed 5%) with the experimental data. Orig. art. has: 4 figures.

SUB CODE: 14, 19, 20/ SUBM DATE: 16Feb65/ ORIG REF: 001/ [DV]

ATD PRESS: 4189

Card 2/2

APPROVED FOR RELEASE: 07/13/2001 CIA-RDP86-00513R001341020013-6"

"APPROVED FOR RELEASE: 07/13/2001 CIA-RDP86-00513R001341020013-6

L 33536-65 EWT(m)/EWP(w)/EWA(d)/T/EWP(t)/EWP(k)/EWP(b)/EWP(1)/EWA(c) MJW/JD/WW

ACCESSION NR: AP5006989 S/0198/65/001/001/0052/0061

AUTHORS: Pisarenko, G. S. (Kiev); Troshchenko, V. T. (Kiev); Bugay, V. I. (Kiev)

TITLE: Effect of cyclic plastic deformation on metal fatigue under conditions of homogeneous and nonhomogeneous stress states

SOURCE: Prikladnaya mekhanika, v. 1, no. 1, 1965, 52-61

TOPIC TAGS: plastic deformation, fatigue strength, steel, copper, tensile strength, compression strength, shear strength/ 20Kh steel, 25 steel, 45 steel, 1Kh18N9T steel, 1Kh18N10T steel, EI726 steel, TsDM PU 10 hydraulic machine

ABSTRACT: Experimental results were obtained characterizing the plastic deformation flows in a series of steels and copper under repeatedly varying load conditions both homogeneous (tension-compression) and nonhomogeneous (shear). The types of steels used were: low carbon steels 20Kh and 25, medium carbon steel 45, and high-temperature austenitic steels 1Kh18N9T, 1Kh18N10T, and EI726. For symmetric tension-compression tests a hydraulic machine type TsDM-PU-10 was used and for symmetric bending--a resonance fatigue machine. The results were obtained on oscillographs in the form of hysteresis loops. The results of these tests show that the ratio of fatigue strength to a characteristic static strength in tension in metals does not

Card 1/2

APPROVED FOR RELEASE: 07/13/2001 CIA-RDP86-00513R001341020013-6"

"APPROVED FOR RELEASE: 07/13/2001 CIA-RDP86-00513R001341020013-6

L 33536-65

ACCESSION NR: AP5006989

remain constant. The cyclic deformation curves in these metals differ considerably from the static deformation diagrams. A good correlation was found between the fatigue strength in bending and tension-compression and the cyclic proportionality limit σ_{pp}. The ratio σ_{-1}/σ_{pp} varied between limits 0.8-1.0. Finally, there was a monotonic increase in plastic deformation per cycle as a function of the stress. Orig. art. has: 7 figures, 3 tables, and 1 formula.

ASSOCIATION: Institut problem materialovedeniya AN UkrSSR (Institute of Problems in the Science of Materials, AN UkrSSR)

SUBMITTED: 06Oct64 ENCL: 00 SUB CODE: MM,ME

NO REF SOV: 006 OTHER: 004

Card 2/2

APPROVED FOR RELEASE: 07/13/2001 CIA-RDP86-00513R001341020013-6"

"APPROVED FOR RELEASE: 07/13/2001 CIA-RDP86-00513R001341020013-6

L 20725-66 EWP(k)/EWT(m)/T/EWP(e)/EWP(w)/EWP(t) IJP(c) JT

ACC NR: AP6011999 SOURCE CODE: UR/0198/65/001/005/0060/0065

AUTHOR: Krasovskiy, A. Ya. (Kiev); Pisarenko, G. S. (Kiev)

ORG: Institute of Problems in the Science of Materials, UkrSSR (Institut problem materialovedeniya AN UkrSSR)

TITLE: Particular effects of porosity on mechanical properties of iron

SOURCE: Prikladnaya mekhanika, v. 1, no. 5, 1965, 60-65

TOPIC TAGS: solid mechanical property, iron, sintered metal, metal powder, metal property, porosity

ABSTRACT: Basic results are described which were obtained when examining the physical-mechanical properties of samples of sintered iron whose void fraction varied from 0 and 50%. The experiments were carried out with a large number of samples prepared from one batch of powdered iron using a single method which allowed a comparison of results. The mechanism of destruction of material has been studied using three methods. Tensile and torsion diagrams were made. Elastic constants, plasticity and tensile strength characteristics, and electric conductance of material were determined. Bending with twisting was also investigated. An analysis of the effect of porosity on various properties was also performed. Also, experiment were performed to determine the affect of oxide films on the surfaces of the walls of exposed pores on the shape of the tensile diagram. Orig. art. has: 5 figures, 3 formulas, and 2 tables. [JPRS]

SUB CODE: 20, 11 / SUBM DATE: 25Jan65 / ORIG REF: 005

Card 1/1

APPROVED FOR RELEASE: 07/13/2001 CIA-RDP86-00513R001341020013-6"

"APPROVED FOR RELEASE: 07/13/2001 CIA-RDP86-00513R001341020013-6

APPROVED FOR RELEASE: 07/13/2001 CIA-RDP86-00513R001341020013-6"

"APPROVED FOR RELEASE: 07/13/2001 CIA-RDP86-00513R001341020013-6

PISARENKO, G.S.; TROSHCHENKO, V.T.; KRASOVSKIY, A.Ya.

Investigating the mechanical properties of porous iron under the effect of tension and torsion. Porosh. met. 5 no.7:88-96 Jl '65. (MIRA 18:8)

1. Institut problem materialovedeniya AN UkrSSR.

APPROVED FOR RELEASE: 07/13/2001 CIA-RDP86-00513R001341020013-6"

"APPROVED FOR RELEASE: 07/13/2001 CIA-RDP86-00513R001341020013-6

L 57734-65 EWT(d)/EWT(m)/EWP(w)/EWA(d)/EPR/T/EWP(t)/EWP(k)/EWP(z)/EWP(b)/EWA(c)
PF-4 EW/IG/JD/HW

ACCESSION NR: AP5017094 UR/0032/65/031/007/0859/0862
620.178.3

45
40
B

AUTHOR: Pisarenko, G. S.; Chernenko, L. D.; Gryaznov, B. A.

TITLE: Fatigue limit of axle steel in the forced-fit zone at low temperatures

SOURCE: Zavodskaya laboratoriya, v. 31, no. 7, 1965, 859-862

TOPIC TAGS: fatigue limit, axle steel, forced fit zone, low temperature, dynamic loading machine, stress concentration, hot working, cold working, surface hardening

ABSTRACT: The fatigue characteristics of metal with stress concentration in its forced-fit zone at low temperatures have so far been relatively uninvestigated. In most cases this is due to the experimental difficulties and the lack of apparatus that could assure the required range of low temperatures during prolonged tests of dynamically loaded specimens. The literature contains little information on such problems as the effect of the regime of hot and cold working on the fatigue strength of steel in the forced-fit zones of axles, shafts, and other elements operating at normal and low temperatures. It has recently been determined, however, that surface hardening is one of the most effective methods for the cold-

Card 1/3

APPROVED FOR RELEASE: 07/13/2001 CIA-RDP86-00513R001341020013-6"

"APPROVED FOR RELEASE: 07/13/2001 CIA-RDP86-00513R001341020013-6

L 57734-65

ACCESSION NR: AP5017094

4

working of elements that have stress concentrations and are exposed to cyclic loads. In this connection, the authors investigated the fatigue strength of hardened and nonhardened specimens of axle steel (0.42% C, 0.8% Mn, 0.3% Si, 0.1% Cr, 0.1% Ni, 0.18% Cu, 0.027% S, and 0.014% P) at normal (+20°C) and low (-60°C) temperatures. The specimens were of 30 mm diameter and had stress concentrations in their forced-fit zone. Nonhardened smooth specimens of 8 mm diameter as well as specimens of the same diameter with annular grooves also were tested. The specimens were heat-treated by the standard procedure used in the production of locomotive axles and cold-worked by means of a special three-roll lathe attachment. Their fatigue tests were then performed in two dynamic loading machines equipped with a special cooling system for testing at low temperatures. An analysis of the findings showed that the method of hot and cold working and the ambient temperature markedly affect the fatigue strength of axle steel, particularly in the forced-fit zone. Hardened specimens displayed a 32% higher fatigue strength. As the temperature decreased to -60°C the fatigue limit of axle steel following 10^7 loading cycles was somewhat higher than at room temperature. Thus, yet another proof was obtained that hardening has a greater effect on fatigue strength than any other type of treatment. Thus while the physical nature of the process of the increase in the fatigue strength of metal in the zone of its limited endurance at low temperatures still remains unclarified, it is perfectly obvious that the

Card 2/3

APPROVED FOR RELEASE: 07/13/2001 CIA-RDP86-00513R001341020013-6"

"APPROVED FOR RELEASE: 07/13/2001 CIA-RDP86-00513R001341020013-6

L 57734-65

ACCESSION NR: AP5017094

change in the fatigue limit is preceded by a series of factors of a technological nature. The positive influence of the hardening effect on endurance in the zone of high overloads also is incontestable. Orig. art. has: 3 figures, 2 formulas.

ASSOCIATION: Institut problem materialovedeniya Akademii nauk UkrSSR (Institute for the Study of Materials, Academy of Sciences UkrSSR)

SUBMITTED: 00 ENCL: 00 SUB CODE: MT, MM

NR REF SOV: 002 OTHER: 000

Card 3/3

APPROVED FOR RELEASE: 07/13/2001 CIA-RDP86-00513R001341020013-6"

"APPROVED FOR RELEASE: 07/13/2001 CIA-RDP86-00513R001341020013-6

L 31115-66 EWT(1)/EWP(m)/EWT(m)/EWP(w)/EWA(d)/EWP(v)/T/EWP(t)/EWP(k)/EWA(1)

ACC NR: AT6000671 (N) SOURCE CODE: UR/0000/65/000/000/0261/0268

AUTHOR: Pisarenko, G. S. (Academician AN UkrSSR) (Kiev); Tret'yachenko, G. N. (Kiev); Gogotsi, G. A. (Kiev); Kravchuk, L. V. (Kiev); Kuriat, R. I. (Kiev); Vdovenko, V. V. (Kiev); Gryazmov, B. A. (Kiev)

ORG: none

TITLE: Apparatus for investigating characteristic strength of materials and structural elements in high-temperature gas streams

SOURCE: Vsesoyuznoye soveshchaniye po voprosam staticheskoy dinamicheskoy prochnosti materialov i konstruktsionnykh elementov pri vysokikh i nizkikh temperaturakh, 3d, Termoprochnost' materialov i konstruktsionnykh elementov (Thermal strength of materials and construction elements); materialy soveshchaniya. Kiev, Naukova dumka, 1965, 261-268

TOPIC TAGS: high temperature strength, gas flow, temperature test, test chamber, aerodynamic environment test

ABSTRACT: The details of a test apparatus for investigating the high-temperature strength of materials and parts are described. This apparatus is used to evaluate the fatigue strength of brittle and plastic structural elements (such as gas turbine blades), the thermal shock characteristics of various materials, their thermal

Card 1/2

APPROVED FOR RELEASE: 07/13/2001 CIA-RDP86-00513R001341020013-6"

"APPROVED FOR RELEASE: 07/13/2001 CIA-RDP86-00513R001341020013-6

L 31115-66

ACC NR: AT6008671

stability, oxidation resistance at high temperatures, etc. The apparatus consists of a gas dynamic test bed, a high-temperature flow generator (from 600 to 3000K), and an instrumentation complex for measuring and recording the flow temperature and other parameters. The gas flow can attain velocities up to Mach 1.5 at a flow rate of 1.7 kg/sec, and pressures of 80 newtons/cm^2. The air stream is heated successively in three combustion chambers and pumped through a blow-through chamber. Three types of blow-through chambers are used as test sections: one for a continuous test run, another for a controlled duration test run, and a third type for instantaneous exposure and removal of the model. The instrumentation consists of thermocouples, automatic recording potentiometers, calorimeters, pyrometers, oscillograms, and flow meters. The apparatus also contains a device for controlling the mixture of the test gas. Orig. art. has: 4 figures.

SUB CODE: 20,13/ SUBM DATE: 19Aug65

Card 2/2

APPROVED FOR RELEASE: 07/13/2001 CIA-RDP86-00513R001341020013-6"

"APPROVED FOR RELEASE: 07/13/2001 CIA-RDP86-00513R001341020013-6

L 44362-66 EWT(m)/EWP(t)/EWP(w)/ETI IJP(c) EM/JH/HW
ACC NR: AP6007290 SOURCE CODE: UR/0226/66/000/002/0069/0086

AUTHOR: Pisarenko, G. S., Mozharovskiy, N. S.

ORG: Institute for the Study of Materials, AN UkrSSR (Institut problem materialovedeniya AN UkrSSR); Kiev Polytechnic Institute (Kiyevskiy politekhnicheskiy institut)

TITLE: Fracture of high-temperature alloys under thermocyclic loads

SOURCE: Poroshkovaya metallurgiya, no. 2, 1966, 69-86

TOPIC TAGS: oscillograph, alloy, cyclic load, heat transfer, material fracture, turbine blade, nickel base alloy / N-700 oscillograph, 1Kh18N9T alloy, EI607 alloy

ABSTRACT: Studies on the thermal fatigue of real gas-turbine nozzle blades made of a Ni-base alloy were carried out on a gas-dynamic test rig. The blades were heated in a gas flow (373 ≈ 1173°K and 373 ≈ 1473°K) temperatures, pressures and velocities and cooled in a flow of compressed air, which corresponds to the conditions of service of turbine blading during turbine startup and shutdown. The periodic connection and disconnection of the combustion chamber produced near-natural heating and cooling cycles. The flow rate of hot gas in front of the leading edges of the blades was 120 m/sec. The temperature field over the blade cross section

Card 1/3

APPROVED FOR RELEASE: 07/13/2001 CIA-RDP86-00513R001341020013-6"

"APPROVED FOR RELEASE: 07/13/2001 CIA-RDP86-00513R001341020013-6

L 44362-66
ACC NR: AP6007290

was investigated with the aid of chromel-alumel thermocouples and recorded on photosensitive paper with the aid of a N-700 oscillograph. Analysis of the oscillograms revealed (Fig. 1)

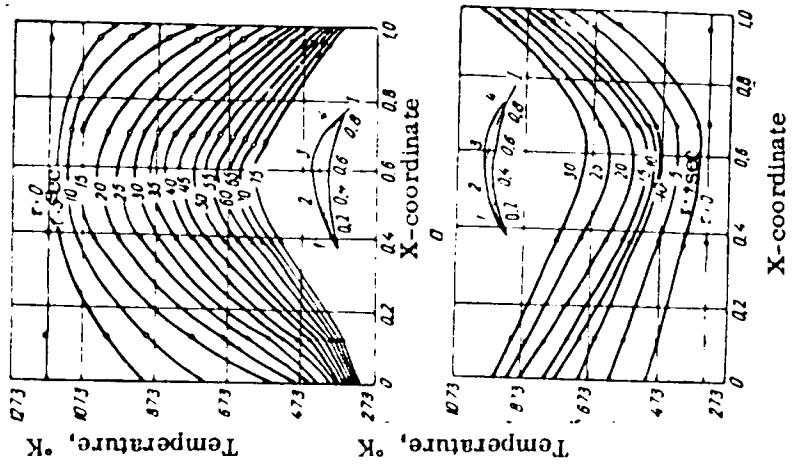

Fig. 1. Experimental curves of temperature distribution over the mean cross sectional area of turbine blades made of Ni-base alloy; a - during cooling; b - during heating

Card 2/3

APPROVED FOR RELEASE: 07/13/2001 CIA-RDP86-00513R001341020013-6"

"APPROVED FOR RELEASE: 07/13/2001 CIA-RDP86-00513R001341020013-6

L 44[illegible]-66
ACC NR: AP6007290

that the heating and cooling rates differ for the leading and trailing edges of the blades and hence the temperature stresses also differ. Calculations performed by the method of successive approximations showed that the concomitant plastic deformations produce residual stresses which cause the metal to flow alternately in one direction and another. These reversals of the flow of metal due to temperature-induced stresses transcend the yield point of the material at a given temperature and, following a comparatively small number of heat transfers, lead to the formation of cracks at the metal surface and hence also reduce the metal's strength. Thus, e.g. tests of the nozzle blades cyclically heated in the temperature regime of 373 ⇄ 1173°K led to no cracks following 150 heat-transfer cycles, but when performed in the regime of 373 ⇄ 1473°K they resulted in the formation of a network of fatigue-type cracks on the blade edges after as few as 40 heat-transfer cycles. Formulas relating the irreversibly absorbed energy W per thermal (heat transfer) loading cycle to the number N of these cycles are derived and employed to predict the number of cycles until fracture, and hence also the service life of such alloys as 1Kh18N9T and EI607, as confirmed by experimental findings. Orig. art. has: 10 figures, 60 formulas.

SUB CODE: 11 13/ SUBM DATE: 15Jan65/ ORIG REF: 006/ OTH REF: 004/

Card 3/3 hs

APPROVED FOR RELEASE: 07/13/2001 CIA-RDP86-00513R001341020013-6"

"APPROVED FOR RELEASE: 07/13/2001 CIA-RDP86-00513R001341020013-6

L 44197-66 EWT(m)/EWP(w)/[illegible]/T/EWP([illegible]) [illegible]/RM

ACC NR: AP6015700 (A) SOURCE CODE: UR/0413/66/000/009/0098/0098

INVENTOR: Pisarenko, G. S.; Tret'yachenko, G. N.; Gogotsi, G. A.

ORG: none

TITLE: Device for recording failures of test pieces prepared from brittle heat-insulating materials. Class 42, No. 181362 [announced by the Institute for Problems in Science of Materials AN UkrSSR (Institut problem materialovedeniya AN UkrSSR)]

SOURCE: Izobreteniya, promyshlennyye obraztsy, tovarnyye znaki, no. 9, 1966, 98

TOPIC TAGS: recording device, failure pickup unit, heat insulating material

ABSTRACT: This Author Certificate introduces a device for recording failures of test pieces prepared from brittle heat-insulating materials during tests for heat resistance featuring failure pickup units, a temperature transmitter, and an automatic temperature recorder. For higher accuracy, there is a relay-type slave mechanism with open

Card 1/2 UDC: 620.172.224.4

APPROVED FOR RELEASE: 07/13/2001 CIA-RDP86-00513R001341020013-6"

"APPROVED FOR RELEASE: 07/13/2001 CIA-RDP86-00513R001341020013-6

L 44122-66
ACC NR: AP6015700

contacts between the temperature transmitter and the recorder. The mechanism is connected with both the single signal unit and storage unit which, in turn, are connected by current leads with the failure pickup units of the test pieces (see Fig. 1). Orig. art. has: 1 figure. [Translation] [LD]

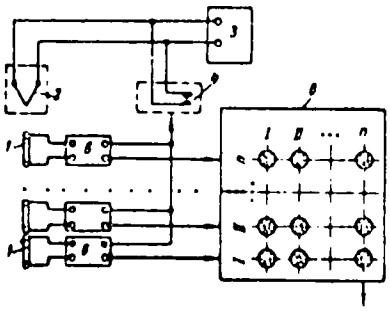

Fig. 1. Automatic device for recording failures of test pieces prepared from heat-insulating materials.
1—Failure pickup unit; 2—temperature transmitter; 3—automatic recorder; 4—slave mechanism; 5—storage unit; 6—single signal unit

SUB CODE: 13/4/ SUBM DATE: 18Jan65/
Card 2/2

APPROVED FOR RELEASE: 07/13/2001 CIA-RDP86-00513R001341020013-6"

"APPROVED FOR RELEASE: 07/13/2001 CIA-RDP86-00513R001341020013-6

27562-67 EWP(w) EM/GD

ACC NR: AT6029364 SOURCE CODE: UR/0000/66/000/000/0045/0051

AUTHOR: Pisarenko, G. S. (Academician AN UkrSSR, Kiev); Voznesenskiy, G. P. (Kiev)

ORG: none

15
B+1

TITLE: Vibrations in orthotropic plates taking account of dissipation of energy in the material

SOURCE: AN UkrSSR. Institut problem materialovedeniya. Rasseyaniye energii pri kolebaniyakh uprugikh sistem (Energy dissipation during vibrations of elastic systems). Kiev, Naukova dumka, 1966, 45-51

TOPIC TAGS: vibration analysis, heat energy conversion, elastic modulus, elastic hysteresis

ABSTRACT: The article considers the problem of free transverse vibrations in orthotropic plates (See Fig.). In the system of coordinates adopted, the generalized Hooke's Law can be written in the form

$$\left.\begin{aligned} \sigma_x &= -\frac{E_1 z}{1-\mu_1\mu_2}\left(\frac{\partial^2 w}{\partial x^2} + \mu_2 \frac{\partial^2 w}{\partial y^2}\right), \\ \sigma_y &= -\frac{E_2 z}{1-\mu_1\mu_2}\left(\frac{\partial^2 w}{\partial y^2} + \mu_1 \frac{\partial^2 w}{\partial x^2}\right), \\ \tau_{xy} &= -2Gz\frac{\partial^2 w}{\partial x \partial y}. \end{aligned}\right\} \quad (1)$$

Card 1/2

APPROVED FOR RELEASE: 07/13/2001 CIA-RDP86-00513R001341020013-6"

"APPROVED FOR RELEASE: 07/13/2001 CIA-RDP86-00513R001341020013-6

ACC NR: AT6029364

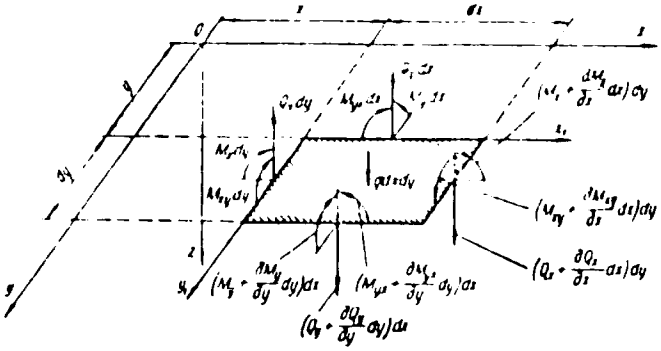

Fig. Element of a plate with thickness h, and the acting forces.

where E_1 and E_2 are the elastic moduli with extension in the directions x and y; G is the elastic modulus under shear; w is a deflection function; z is the distance from the neutral layer through the thickness of the plate to the point under consideration. After further substitutions of variables to take account of hysteresis, the article proceeds to a mathematical solution of the problem. Orig. art. has: 22 formulas and 1 figure.

SUB CODE: 20/ SUBM DATE: 22Feb66/ ORIG REF: 002

Card 2/2 nst

APPROVED FOR RELEASE: 07/13/2001 CIA-RDP86-00513R001341020013-6"

"APPROVED FOR RELEASE: 07/13/2001 CIA-RDP86-00513R001341020013-6

L 07580-67

ACC NR: AT6029363 SOURCE CODE: UR/0000/66/000/000/0019/0031

AUTHOR: Pisarenko, G. S. (Academician AN UkrSSR, Kiev); Panchin, V. V. (Kiev)

ORG: none

27

B+1

TITLE: The general case of transverse vibrations in a rod with variable cross section taking account of dissipation of energy in the material

SOURCE: AN UkrSSR. Institut problem materialovedeniya. Rassoyaniye energii pri kolebaniyakh uprugikh sistem (Energy dissipation during vibrations of elastic systems). Kiev, Naukova dumka, 1966, 19-31

TOPIC TAGS: vibration analysis, heat energy conversion

ABSTRACT: The article starts with a consideration of transverse vibrations which are symmetrical with respect to the axis of the system. It is assumed here that the ratio of the length and the transverse cross sections of the system is such that, in setting up the differential equation for the transverse vibrations of such a rod, account must be taken of the rotational inertia of its mass as well as the transverse force. To derive the differential equation for the transverse vibrations of a rod with a variable cross section with a cross section area F(x) and a bending rigidity of the section EJ(x), we isolate an element of the rod with a length dx which carries out a complex motion, consisting of forward motion parallel to the y axis and a rotating

Card 1/2

APPROVED FOR RELEASE: 07/13/2001 CIA-RDP86-00513R001341020013-6"

"APPROVED FOR RELEASE: 07/13/2001 CIA-RDP86-00513R001341020013-6

L 07580-67

ACC NR: AT6029363

0

motion in the plane of the vibrations (in the xy plane). The remainder of the article is an extended mathematical development, arriving at formulas which permit construction of the resonance curve of the transverse vibrations of a rod whose cross section varies along the length in an arbitrary manner. Orig. art. has: 63 formulas.

SUB CODE: 20/ 10/ SUBM DATE: 22Feb66/ ORIG REF: 002

Card 2/2 eg/v

APPROVED FOR RELEASE: 07/13/2001 CIA-RDP86-00513R001341020013-6"

"APPROVED FOR RELEASE: 07/13/2001 CIA-RDP86-00513R001341020013-6

ACC NR: AP6036827 (A) SOURCE CODE: UR/0021/66/000/011/1417/1422

AUTHOR: Pysarenko, H. S. — Pisarenko, G. S. (Academician AN UkrSSR); Bocharova, L. A.

ORG: Institute of the Problems of the Science of Metals AN URSR (Institut problem materialoznavstva AN URSR)

TITLE: Investigation of the damping properties of some refractory metals at high temperatures in vacuum

SOURCE: AN UkrSSR. Dopovidi, no. 11, 1966, 1417-1422

TOPIC TAGS: vibration damping, refractory metal damping ability, molybdenum vibration damping ability, tungsten vibration damping ability, niobium vibration damping ability, refractory metal

ABSTRACT: In a search for a material possessing high damping characteristics at high temperatures, the Laboratory of Vibrations of the Institute of Problems of the Science of Materials AN URSR has investigated the damping behavior of as-rolled and annealed (1173K for 1 hr) sintered molybdenum, arc-melted niobium, and sintered tungsten. Flat specimens were subjected to vibrations under a stress varying from 200 to 300 mm/m^2 in a vacuum at 293—1500K and in air at 293K. The logarithmic decrement of vibrations was used as a criterion of the damping ability. In all the tested materials and at all test temperatures, the decrement increased with

Card 1/2

APPROVED FOR RELEASE: 07/13/2001 CIA-RDP86-00513R001341020013-6"

"APPROVED FOR RELEASE: 07/13/2001 CIA-RDP86-00513R001341020013-6

ACC NR: AP6036827

increasing stress. The decrement of the tested metals, except molybdenum in the as-rolled condition, increased with increasing test temperature. For almost all the tested metals in the entire range of test temperatures, the values of the decrement on heating differed from those on cooling. At 273K, the damping properties of metals before heating were, as a rule, slightly higher than after heating. The magnitudes of the decrement in vacuum and in air at 273K differed by 6—8%, with the difference decreasing as the decrement increased. At all test temperatures, refractory metals had a higher decrement of vibrations than the most heat-resistant nickel-base alloys. Satisfactory damping properties combined with a high endurance limit (as compared with heat-resistant alloys) in the wide temperature range make refractory metals promising structural materials in various fields of modern industry. Orig. art. has: 4 figures. [MS]

SUB CODE: 11/ SUBM DATE: 07Jun66/ ORIG REF: 002/ OTH REF: 001/ ATD PRESS: 5109

Card 2/2

APPROVED FOR RELEASE: 07/13/2001 CIA-RDP86-00513R001341020013-6"

"APPROVED FOR RELEASE: 07/13/2001 CIA-RDP86-00513R001341020013-6

TEODOROVICH, G.I.; PISARENKO, I.A.; MELAMEDOVA, V.S.

Thermal analysis of iron carbonates. Izv. vys. ucheb. zav.; geol. i razv. no.11:61-67 N '60. (MIRA 14:2)

1. Institut nefti AN SSSR.
(Rocks, Carbonate—Thermal properties)

APPROVED FOR RELEASE: 07/13/2001 CIA-RDP86-00513R001341020013-6"

"APPROVED FOR RELEASE: 07/13/2001 CIA-RDP86-00513R001341020013-6

TEODOROVICH, Georgiy Ivanovich; POLONSKAYA, Brungil'da Yakovlevna; ANDRIANOVA, Aleksandra Glebovna; MELAMEDOVA, Valentina Semenovna; PISARENKO, Irina Aleksandrovna; SHVEDOVA, Tamara Mikhaylovna; VARENTSOV, M.I., otv.red.; SHAPOVALOVA, G.A., red.izd-va; RYLINA, Yu.V., tekhn.red.

[Mineralogical-geochemical facies and conditions of the formation of petroleum-producing terrigenous Devonian strata in western Bashkiria and eastern Tatarstan] Mineralogo-geokhimicheskie fatsii i usloviia obrazovaniia nefteproizvodiashchikh terrigennykh otlozhenii devona Zapadnoi Bashkirii i Vostochnoi Tatarii. Moskva, Izd-vo Akad.nauk SSSR, 1960. 148 p.

(MIRA 14:3)

1. Chlen-korrespondent AN SSSR (for Varentsov).
(Ural-Volga region--Petroleum geology)

APPROVED FOR RELEASE: 07/13/2001 CIA-RDP86-00513R001341020013-6"

"APPROVED FOR RELEASE: 07/13/2001 CIA-RDP86-00513R001341020013-6

L 22346-66 EWP(e)/EWT(m)/EWP(w)/EWA(d)/T/EWP(t)/EWP(k) IJP(c) JD/HW/DJ/WH

ACC NR: AP6012608 SOURCE CODE: UR/0182/66/000/004/0011/0013

AUTHOR: Chernyy, Yu. F.; Zolotukhina, N. D.; Pisarenko, I. D.

ORG: none

TITLE: Investigation of lubricants in hot extrusion of steel

SOURCE: Kuznechno-shtampovochnoye proizvodstvo, no. 4, 1966, 11-13

TOPIC TAGS: steel extrusion, hot extrusion, extrusion lubricant, glass lubricant, glass lubricant deposition

ABSTRACT: Twenty different glass lubricants have been tested in hot extrusion of 1Kh18N9T steel ingots. The chemical composition of some of the glass lubricants is shown in Table 1. The ingots were heated for 10 min to extrusion temperature in a molten glass bath. This method of heating and applying glass lubricant was found to have a number of advantages. It raises the effectiveness of extrusion, reduces the nonuniformity of heat distribution in the ingot, and ensures a strong adhesion of lubricant to the ingot surface. The glass lubricant also increases the plasticity of the surface layer of the metal, which resulted in a better surface quality of extruded articles. Lubricants no. 12, 13, or 16 also reduce the extrusion pressure. The thickness of the glass layer depended upon glass viscosity and varied from 0.65 to 1.3 mm with low viscosity glasses to 2.8—5 mm with high viscosity glasses. Best results was obtained with glasses no. 13 and 16. The softening temperature of

Card 1/2 UDC: 621.891

APPROVED FOR RELEASE: 07/13/2001 CIA-RDP86-00513R001341020013-6"

"APPROVED FOR RELEASE: 07/13/2001 CIA-RDP86-00513R001341020013-6

L 22346-66

ACC NR: AP6012608

3

Table 1. Glass lubricants

No.	Chemical composition								
	SiO_2	Al_2O_3	Fe_2O_3	CaO	MgO	Na_2O	B_2O_3	CaF_2	SO_3
12	69,54	3,84	0,58	5,44	2,08	16,81	1,55	—	0,2
13	53,60	6,16	0,66	5,05	0,09	26,73	7,63	—	0,17
14	51,92	5,27	1,44	6,63	0,25	29,68	4,86	—	—
16	50,82	5,01	0,21	14,53	0,14	24,06	2,50	2,83	—
20	69,36	4,13	0,51	7,73	3,13	15,21	—	—	—

no. 13 glass is 590C and of the other glasses, 590—785C. A diffusion of Si, Al, Ca, Mg, and Na from glasses no. 13, 14, and 16 was observed. The most active elements were Si, Al, and Ca; the depth of penetration reached 0.10—0.23 mm. Orig. art. has: 3 figures and 2 tables. [ND]

SUB CODE: 13, 11/ SUBM DATE: none/ ATD PRESS: 4242

Card 2/2

APPROVED FOR RELEASE: 07/13/2001 CIA-RDP86-00513R001341020013-6"

"APPROVED FOR RELEASE: 07/13/2001 CIA-RDP86-00513R001341020013-6

PISARENKO, I.D., inzh.

Photocolorimetric determination of minor boron content in alloyed steels. Mashinostroenie no.6:59-62 N-D '64 (MIRA 18:2)

APPROVED FOR RELEASE: 07/13/2001 CIA-RDP86-00513R001341020013-6"

"APPROVED FOR RELEASE: 07/13/2001 CIA-RDP86-00513R001341020013-6

PISARENKO, I.A.

Portable forging furnace. Rats. i izobr. predl. v stroi. no.103: 26-27 '54. (MLRA 8:11)

(Forging machinery)

APPROVED FOR RELEASE: 07/13/2001 CIA-RDP86-00513R001341020013-6"

"APPROVED FOR RELEASE: 07/13/2001 CIA-RDP86-00513R001341020013-6

PISARENKO, I.D., inzh.; BONDARENKO, I.A., inzh.

Using Arsenazo III indicator in determining zirconium content in nonstandard bronzes and alloys based on copper. Mashinostroenie no. 2:77-80 Mr-Ap '64. (MIRA 17:4)

APPROVED FOR RELEASE: 07/13/2001 CIA-RDP86-00513R001341020013-6"

"APPROVED FOR RELEASE: 07/13/2001 CIA-RDP86-00513R001341020013-6

L 41038-66 EWT(m)/EWT(t)/ETI IJP(c) JD/JG

ACC NR: AP6019491 SOURCE CODE: UR/0075/66/021/006/0669/0672

AUTHOR: Savvin, S. B.; Pisarenko, I. D.; Yurchenko, Ye. I.; Dedkov, Yu. M. 58 B

ORG: Institute of Geochemistry and Analytical Chemistry im. V. I. Vernadskogo, AN SSSR, Moscow (Institut geokhimii i analiticheskoy khimii AN SSSR); Scientific Research and Design-Technological Institute of Machine Building, Krasnotorsk (Nauchno-issledovatel'skiy i proyektno-tekhnologicheskiy institut mashinostroyeniya)

TITLE: Photometric determination of niobium in alloy steels using sulfochlorophenol S

SOURCE: Zhurnal analiticheskoy khimii, v. 21, no. 6, 1966, 669-672

TOPIC TAGS: photometric analysis, niobium, niobium containing alloy, alloy steel

ABSTRACT: A rapid photometric method for determining 0.05-2.5% niobium in alloy steels is described. In this method, the steel sample is first dissolved in sulfuric acid and the niobium content is determined photometrically, using sulfochlorophenol S (solution in 3N HCl containing tartaric and phosphoric acids) as indicator. The structure of the sulfochlorophenol S indicator is

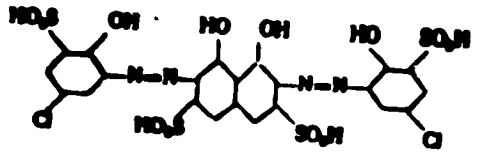

Card 1/2 af

UDC: 543.70

APPROVED FOR RELEASE: 07/13/2001 CIA-RDP86-00513R001341020013-6"

"APPROVED FOR RELEASE: 07/13/2001 CIA-RDP86-00513R001341020013-6

L 11638-66

ACC NR: AP6019891

A calibration curve is given for 5-40 milligram niobium per 50 ml solution. Excellent agreement was found between this photometric method and the gravimetric analysis method. Orig. art. has: 1 figure, 1 table, 1 formula.

SUB CODE: 07/ SUBM DATE: 24Nov64/ ORIG REF: 007

Card 2/2 aJ

APPROVED FOR RELEASE: 07/13/2001 CIA-RDP86-00513R001341020013-6"

"APPROVED FOR RELEASE: 07/13/2001 CIA-RDP86-00513R001341020013-6

PISARENKO, I. M.; LEYKIN, M. M.

"The Experience With Treatment of Neurasthenic Patients at "Darasun" Sanatorium," Voyenno-Med. Zhur., No. 6, p. 73, 1955.

APPROVED FOR RELEASE: 07/13/2001 CIA-RDP86-00513R001341020013-6"

"APPROVED FOR RELEASE: 07/13/2001 CIA-RDP86-00513R001341020013-6

PISHENKO, M

ALEKSYEYEV, K.O.; ORLOV, O.I.; SAVANCHUK, V.O.; PISARENKO, M., redaktor; PATSALYUK, P., tekhnicheskiy redaktor

[Manual for rural communication workers] Posibnik sil's'koho zv'iazkivtsia. Kyiv, Dersh.vyd-vo tekhn.lit-ry URSR, 1956. 350 p. (Telecommunications) (MLRA 10:7)

APPROVED FOR RELEASE: 07/13/2001 CIA-RDP86-00513R001341020013-6"

"APPROVED FOR RELEASE: 07/13/2001 CIA-RDP86-00513R001341020013-6

Pisarenko, M.

CHERTORIZHSKIY, Konstantin Vakkhonovich [Chertorizhs'kyi, K.V.]; KRASHENINNIKOV, Ivan Ivanovich; PISARENKO, M., veduchiy red.; PAPSALYUK, P., tekhn. red.

[Equipment for operating electric drives] Aparatura upravlennia elektropryvodamy. Kyiv, Derzh. vyd-vo tekhn. lit-ry URSR, 1958. 325 p. (MIRA 11:8)

(Electric driving)

APPROVED FOR RELEASE: 07/13/2001 CIA-RDP86-00513R001341020013-6"

"APPROVED FOR RELEASE: 07/13/2001 CIA-RDP86-00513R001341020013-6

BABENKO, Yuriy Aleksandrovich [Babenko, IU.O.]; GLADKOV, Grigoriy Stepanovich; KLIMENKO, Grigoriy Afanas'yevich [Klimenko, G.P.]; MAUMCHENKO, Vladimir Petrovich; KHRISTICH, Aleksandr Ignat'yevich [Khristich, O.G.]; SHVETS, I.T., akademik, red.; PISARENKO, M., red.; VORTMAN, Z., tekhn.red.

[Electrification of the Ukraine during the years of the Soviet regime] Elektryfikatsiia Ukrainy za roky radians'koi vlady. Kyiv, Derzh. vyd-ve tekhn. lit-ry URSR, 1958. 150 p. (MIRA 12:1)

1. AN Ukrains'koi RSR (for Shvets).
(Ukraine--Electrification)

APPROVED FOR RELEASE: 07/13/2001 CIA-RDP86-00513R001341020013-6"

"APPROVED FOR RELEASE: 07/13/2001 CIA-RDP86-00513R001341020013-6

PATON, B.Ye., akademik, red.; PISARENKO, M., red.; GUSAROV, K., tekhn.red.

[E.O.Paton Institute of Electric Welding] Institut elektrosvarki im. E.O.Patona. Pod red. B.E. Patona. Kiev, Gos.izd-vo tekhn. lit-ry USSR, 1959. 159 p. (MIRA 13:4)

1. Akademiya nauk USSR, Kiyev. Institut elektrosvarki. 2. AN USSR (for Paton).
(Kiev—Learned institutions and societies)
(Electric welding)

APPROVED FOR RELEASE: 07/13/2001 CIA-RDP86-00513R001341020013-6"

"APPROVED FOR RELEASE: 07/13/2001 CIA-RDP86-00513R001341020013-6

SHVETS, Ivan Trofimovich; LANDSMAN, Solomon Usherovich; PISARENKO, M., red.; MATUSEVICH, S., tekhn.red.

[Electric power resources of the Ukrainian S.S.R.] Energeticheskaia baza Ukrainskoi SSR. Kiev, Gos.izd-vo tekhn.lit-ry USSR, 1960. 29 p. (MIRA 13:11)
(Ukraine--Electric power)

APPROVED FOR RELEASE: 07/13/2001 CIA-RDP86-00513R001341020013-6"

"APPROVED FOR RELEASE: 07/13/2001 CIA-RDP86-00513R001341020013-6

PISAREVA, M.

Presidium of the trade union council in the field. Okhr. truda i sots. strakh. 7 no.2:27 F '64. (MIRA 17:2)

1. Glavnyy tekhnicheskiy inspektor Karagandinskogo sel'skogo oblastnogo soveta professional'nogo soyuza.

APPROVED FOR RELEASE: 07/13/2001 CIA-RDP86-00513R001341020013-6"

"APPROVED FOR RELEASE: 07/13/2001 CIA-RDP86-00513R001341020013-6

ANDRIYEVSKIY, Sergey Konstantinovich; SHAPIRO, Mikhail Naumovich; PISARENKO, M., redaktor; GOLOVCHENKO, G.M tekhnicheskiy redaktor.

[Repair of electric machines and starter-control apparatus] Remont elektricheskikh mashin i puskoreguliruiushchei apparatury. Izd.2-oe, dop. i ispr. Kiev, Gos.izd-vo tekhn.lit-ry USSR, 1955. 245 p. (MLRA 8:12)

(Electric machinery--Maintenance and repair)

APPROVED FOR RELEASE: 07/13/2001 CIA-RDP86-00513R001341020013-6"

"APPROVED FOR RELEASE: 07/13/2001 CIA-RDP86-00513R001341020013-6

PATON, B.Ye., akademik, red.; PISARENKO, M., red.; GUSAROV, K. [Husarov, K.], tekhn.red.

[E.O.Paton Institute of Electric Welding] Instytut elektrozvariuvannia im. IE.O.Patona. Pid.red.B.IE.Patona. Kyiv, Derzh.vyd-vo tekhn.lit-ry, 1959. 155 p. (MIRA 12:12)

1. Akademiya nauk USSR, Kiyev. Institut elektrosvarki. 2. AN USSR (for Paton).
(Kiev--Electric welding)

APPROVED FOR RELEASE: 07/13/2001 CIA-RDP86-00513R001341020013-6"

"APPROVED FOR RELEASE: 07/13/2001 CIA-RDP86-00513R001341020013-6

KATKOV, Fedor Aleksandrovich; PISARENKO, M., red.; MATUSEVICH, S., tekhn.red.

[Multifrequency narrow-band remote control systems] Mnogochastotnye uzkopolosnye sistemy teleupravleniia. Kiev, Gos.izd-vo tekhn.lit-ry USSR, 1960. 207 p. (MIRA 14:6)

(Remote control)

APPROVED FOR RELEASE: 07/13/2001 CIA-RDP86-00513R001341020013-6"

"APPROVED FOR RELEASE: 07/13/2001 CIA-RDP86-00513R001341020013-6

PISARENKO, M.

KOSENKO, Viktor Yefimovich; SKOPENKO, Aleksandr Ivanovich; PISARENKO, M., redaktor; NOVIK, A., tekhnichnyy redaktor

[Semiconductors] Napivprovidnyky. Kyiv, Derzh. vyd-vo tekhn. lit-ry URSR, 1956. 83 p. (MLRA 10:4)

(Semiconductors)

APPROVED FOR RELEASE: 07/13/2001 CIA-RDP86-00513R001341020013-6"

"APPROVED FOR RELEASE: 07/13/2001 CIA-RDP86-00513R001341020013-6

MKHITARYAN, Artashes Melkonovich; PISARENKO, M., red.; GUSAROV, K., tekhn.red.

[Hydraulics and hydromechanics] Gidravlika i gidromekhanika. Kiev, Gos.izd-vo tekhn.lit-ry USSR, 1958. 374 p. (MIRA 12:4)
(Hydraulics) (Fluid mechanics)

APPROVED FOR RELEASE: 07/13/2001 CIA-RDP86-00513R001341020013-6"

"APPROVED FOR RELEASE: 07/13/2001 CIA-RDP86-00513R001341020013-6

DRENOV, Pavel Vasil'yevich; PISARENKO, M., red.; PATSALYUK, P., tekhn.red.

[Manual on the repair of electric machinery] Spravochnik po remontu elektricheskikh mashin. Kiev, Gos.izd-vo tekhn.lit-ry USSR, 1958. 317 p. (MIRA 12:5)
(Electric machinery--Maintenance and repair)

APPROVED FOR RELEASE: 07/13/2001 CIA-RDP86-00513R001341020013-6"

"APPROVED FOR RELEASE: 07/13/2001 CIA-RDP86-00513R001341020013-6

MKHITARYAN, Artashes Melkonovich. Prinimali uchastiye: MAKSIMOV, V.S., assistent; FRIDLAND, V.Ya., assistent; MISHCHUK, O.Ya., assistent. PISARENKO, M., red.; MATUSEVICH, S., tekhn.red.

[Hydraulics and fundamentals of gas dynamics] Gidravlika i osnovy gazodinamiki. Kiev, Gos.izd-vo tekhn.lit-ry USSR, 1959. 279 p. (MIRA 12:8)

1. Kafedra gidravliki Kiyevskogo ordena Lenina politekhnicheskogo instituta (for Maksimov, Fridland).
(Hydraulics) (Aerodynamics)

APPROVED FOR RELEASE: 07/13/2001 CIA-RDP86-00513R001341020013-6"

"APPROVED FOR RELEASE: 07/13/2001 CIA-RDP86-00513R001341020013-6

PASECHNIK, Nikolay Dmitriyevich; PISARENKO, M., redaktor; NOVIK, A., tekhnicheskiy redaktor.

[Elementary electric engineering] Elementarnaia elektrotekhnika. Izd.4-oe, ispr.i dop. Kiev, Gos.izd-vo tekhn.lit-ry USSR, 1957. 223 p. (MIRA 10:10)

(Electric engineering)

APPROVED FOR RELEASE: 07/13/2001 CIA-RDP86-00513R001341020013-6"

"APPROVED FOR RELEASE: 07/13/2001 CIA-RDP86-00513R001341020013-6

PISARENKO, M., red.; MATUSEVICH, S., tekhn.red.

[Introduction of new welding methods in industry] Vnedrenie novykh sposobov svarki v promyshlennost'; sbornik statei, posviashchennykh opytu sodruzhestva Instituta elektrosvarki im. akademika E.O.Patona s promyshlennymi predpriiatiiami. Kiev, Gos.izd-vo tekhn.lit-ry USSR. No.3. 1960. 207 p. (MIRA 13:12)

1. Akademiya nauk USSR, Kiyev. Institut elektrosvarki.
(Electric welding)

APPROVED FOR RELEASE: 07/13/2001 CIA-RDP86-00513R001341020013-6"

"APPROVED FOR RELEASE: 07/13/2001 CIA-RDP86-00513R001341020013-6

TERESHCHUK, Romual'd Mikhaylovich; DOMBRUGOV, Rem Matveyevich; BOSYY, Nikolay Dmitriyevich; OGIYEVSKIY, V.V., prof., red.; DENISENKO, L., veduschiy red.; PISARENKO, M., veduschiy red.; PATSALYUK, P., tekhn.red.

[Radio amateur's handbook] Spravochnik radioliubitelia. Pod obshchei red. V.V.Ogievskogo. Kiev, Gos.izd-vo tekhn.lit-ry USSR, 1957. 506 p. (MIRA 11:2)

(Radio--Amateurs' manuals)

APPROVED FOR RELEASE: 07/13/2001 CIA-RDP86-00513R001341020013-6"

"APPROVED FOR RELEASE: 07/13/2001 CIA-RDP86-00513R001341020013-6

BABENKO, Yuriy Aleksandrovich; GLADKOV, Grigoriy Stepanovich; KLIMENKO, Grigoriy Afanas'yevich; NAUMCHENKO, Vladimir Petrovich; KHRISTICH, Aleksandr Ignat'yevich; PISARENKO, M., red.; GUSAROV, K., tekhn. red.

[Electrification of the Ukraine] Elektryfikatsiia Ukrainy. Derzh. vyd-vo tekhnichnoi lit-ry URSR, 1960. 274 p. (MIRA 14:8)
(Ukraine—Electrification)

APPROVED FOR RELEASE: 07/13/2001 CIA-RDP86-00513R001341020013-6"

"APPROVED FOR RELEASE: 07/13/2001 CIA-RDP86-00513R001341020013-6

APPROVED FOR RELEASE: 07/13/2001 CIA-RDP86-00513R001341020013-6"

"APPROVED FOR RELEASE: 07/13/2001 CIA-RDP86-00513R001341020013-6

FEDCHENKO, Ivan Kirillovich, doktor tekhn. nauk; PETROV, G.N., doktor tekhn. nauk, retsenzent; NEMCHUNOVA, O.A., red. izd-va; PISARENKO, M.G., inzh., red.izd-va; ROZUM, T.I., tekhn. red.

[High-voltage engineering; specific problems] Tekhnika vysokikh napriazhenii; spetsvoprosy. Kiev, Gostekhizdat USSR, 1963. 319 p. (MIRA 17:3)

APPROVED FOR RELEASE: 07/13/2001 CIA-RDP86-00513R001341020013-6"

"APPROVED FOR RELEASE: 07/13/2001 CIA-RDP86-00513R001341020013-6

PASECHNIK, Nikolay [illegible]; PISARENKO, P.G., red.

[Elementar[illegible] [illegible]] Elementarnaia elektrotekhnika. [illegible] izd. Kiev, "Tekhnika," [illegible]. [illegible].
(MIRA [illegible])

APPROVED FOR RELEASE: 07/13/2001 CIA-RDP86-00513R001341020013-6"

"APPROVED FOR RELEASE: 07/13/2001 CIA-RDP86-00513R001341020013-6

ALEKSEYEV, Konstantin Alekseyevich; ORLOV, Aleksandr Ivanovich; SAVANCHUK, Vladimir Aleksandrovich [Savanchuk, V.O.]; PISARENKO, M.G., red.; [Pysarenko, M.H.], red.; STARODUB, T.O., tekhn. red.

[Manual for rural telecommunication workers] Posibnyk sil'skoho zv'iazkivtsia. Vyd. 2., perer. ta dop. Kyiv, Derzhtekhvydav URSR, 1962. 438 p. (MIRA 16:4)
(Telecommunication--Handbooks, manuals, etc.)
(Electric engineering--Handbooks, manuals, etc.)

APPROVED FOR RELEASE: 07/13/2001 CIA-RDP86-00513R001341020013-6"

"APPROVED FOR RELEASE: 07/13/2001 CIA-RDP86-00513R001341020013-6

BRONOVITSKAYA, Z.G.; GERSHENOVICH, Z.S.; PISARENKO, N.

Enzymatic glucosamine synthesis in the liver in hyperoxia. Dokl. AN SSSR 154 no.1:220-222 Ja'64. (MIRA 17:2

1. Predstavleno akademikom A.I. Oparinym.

APPROVED FOR RELEASE: 07/13/2001 CIA-RDP86-00513R001341020013-6"

"APPROVED FOR RELEASE: 07/13/2001 CIA-RDP86-00513R001341020013-6

ACCESSION NR: AP4010766 S/0020/64/154/001/0220/0222

AUTHOR: Bronovitskaya, Z. G.; Gershenovich, Z. S.; Pisarenko, N.

TITLE: Enzyme synthesis of glucosamine in liver under hyperoxidation

SOURCE: AN SSSR. Doklady*, v. 154, no. 1, 1964, 220-222

TOPIC TAGS: glucosamine, glucosamine synthesis, enzyme, enzyme synthesis animal tissues, in vivo analysis, in vitro analysis, fructose 6-phosphate, ammonium ions, hyperoxidation, liver preparation, brain preparation

ABSTRACT: The possibility of the synthesis of glucosamine by enzymic liver preparation from fructose 6-phosphate and ammonium ions is investigated. Glucosamine could be synthesized in a system containing an enzyme, hexophosphate and glutamine or ammonium chloride. The experimental conditions are given and it is established that the synthesis is most intensive during the first 30 minutes. The volume of glucosamine synthesis from glutamine is 0.22 μ mole/hour ml, from

Card 1/2

APPROVED FOR RELEASE: 07/13/2001 CIA-RDP86-00513R001341020013-6"

"APPROVED FOR RELEASE: 07/13/2001 CIA-RDP86-00513R001341020013-6

ACCESSION NR: AP4010766

ammonium chloride about 0.16μ mole/hour ml. The experiments consist of two parts: (1) exposure of the animal to an increased oxygen pressure, (2) preparation of an enzymic preparation and the determination of its activity under usual gas conditions. It is found that after the action of oxygen the glucosamine content is 49% lower than in the control sample. The enzyme is affected by hyperoxidation and a comparison of the metabolisms in the liver and brain shows that the liver synthesizes glucosamine predominantly and the brain consumes it.

ASSOCIATION: none

SUBMITTED: 27May63 DATE ACQ: 10Feb64 ENCL: 00

SUB CODE: CH NO REF SOV: 004 OTHER: 009

Card 2/2

APPROVED FOR RELEASE: 07/13/2001 CIA-RDP86-00513R001341020013-6"

"APPROVED FOR RELEASE: 07/13/2001 CIA-RDP86-00513R001341020013-6

DEDKOV, Yu.M.; [illegible] .B.

Determination of zirconium in cast iron with chlorosulfophenol C as reagent. Zav. lab. 30 no.6:654-655 '64 (MIRA [illegible])

1. Nauchno-issledovatel'skiy [illegible] institut mashinostroyeniya.

APPROVED FOR RELEASE: 07/13/2001 CIA-RDP86-00513R001341020013-6"

"APPROVED FOR RELEASE: 07/13/2001 CIA-RDP86-00513R001341020013-6

37398
S/560/61/000/011/004/012
E032/E514

3.2410
3.2100

AUTHORS: Savenko, I.A., Nesterov, V.Ye., Pavrin, P.I. and Pisarenko, N.F.

TITLE: The cosmic-ray equator according to the data obtained with the third Soviet spaceship

SOURCE: Akademiya nauk SSSR. Iskusstvennyye sputniki Zemli. no.11, Moscow, 1961. Rezul'taty nauchnykh issledovaniy, provedennykh vo vremya poletov v orbitu i tret'yego kosmicheskikh korabley-sputnikov, 50-74

TEXT: It is pointed out that the use of satellites in determination of the cosmic-ray equator, i.e. the geographical position of the line of minimum intensity of primary cosmic rays, has many advantages over terrestrial measurements. In a previous paper the authors reported the determination of 22 points on this equator with the aid of the second cosmic Soviet spaceship in only 20 hours. The apparatus mounted on the third spaceship included a gas-discharge halogen [illegible] (STS-5) counter and a scintillation counter (NaI:Tl). The counters were placed inside the spaceship and were surrounded by a screen of between [illegible] and

Card 1/4

APPROVED FOR RELEASE: 07/13/2001 CIA-RDP86-00513R001341020013-6"

"APPROVED FOR RELEASE: 07/13/2001 CIA-RDP86-00513R001341020013-6

150 g cm^{-2}, as described by S. F. Papkov et al. (Ref.2: Iskusstvennyye sputniki Zemli, No.9, Izd-vo AN SSSR, 1961, p.70). Pulses from the counters were fed into scaling circuits which were sampled at intervals of 3 min by a memory device with a capacity of 24 hours. In this way it was possible to measure the latitude dependence of the intensity of cosmic radiation for each transit across the equator. It is noted that the cosmic-ray intensity measured by the STS-5 counter in the polar regions and at the equator (3 particles cm^{-2} sec^{-1} and 0.7 particles cm^{-2} sec^{-1}, respectively) is in excess of the published values for this intensity (Ref.3: A.N.Charakhch'yan and T.N.Charakhch'yan, ZhETF, 35, 1088, 1958). An analogous effect was observed from the second cosmic spaceship. The discrepancy may be due (among other things) to secondary radiation produced in the envelope of the spaceship. Fig.5 shows the position of the cosmic-ray equator obtained by averaging the data obtained with the second and third spaceships. It follows from this figure that the cosmic-ray equator at altitudes of 200 to 300 km is in satisfactory agreement with the equator computed by J.J.Quenby and W.R. Webber (Ref.7: Philos.Mag., 4, 90, 1959) and the octupole-approximation calculations of

APPROVED FOR RELEASE: 07/13/2001 CIA-RDP86-00513R001341020013-6"

"APPROVED FOR RELEASE: 07/13/2001 CIA-RDP86-00513R001341020013-6

32717

S/560/61/[illegible]

[illegible]

17 1400

[illegible]

[illegible]

[illegible]

TEXT: Dosimetric measurements [illegible] the second [illegible] vehicle, launched on August [illegible], 1[illegible], [illegible] was equipped with two scintillation counters and two [illegible] One of the scintillation counters was attached to the external [illegible] vehicle and was used for registering soft electrons with an energy [illegible] keV. The other scintillation counter, used for registering γ [illegible] charged particles, and the TCC-[illegible] (TSS-[illegible]) and CTC-[illegible] (STS-[illegible]) [illegible] counters were installed inside the vehicle beside the capsule [illegible] experimental animals. The results of measuring radiation intensity [illegible] section of the flight trajectory are shown in fig. 1. An analysis [illegible] readings of the external scintillation counter shows that [illegible] [illegible] [illegible] [illegible] [illegible] [illegible] [illegible]

Card 1/5

APPROVED FOR RELEASE: 07/13/2001 CIA-RDP86-00513R001341020013-6"

"APPROVED FOR RELEASE: 07/13/2001 CIA-RDP86-00513R001341020013-6

32717
S/[illegible]
D045/D114

Dosimetric measurements on ...

[illegible] matter [illegible] approximately [illegible] $1 \cdot 10^{10}$ [illegible]
The dose of radiation absorbed within the [illegible]
7 mrad per day. Radiation registered in the area of the [illegible]
was shown to consist of [illegible] charged particles and γ - [illegible]
with a mean energy of not more than [illegible] ev. Since, with increasing [illegible]
tude, these readings change by approximately the same degree [illegible]
also holds true for the polar regions. An analysis of the [illegible]
established that the radiation belt were located nearly [illegible] km from the
Earth's surface. A figure is included showing the varying [illegible]
intensity of absorbed radiation over different areas of the Earth. The
highest quantity of absorbed radiation ([illegible] mrad/day) was registered [illegible]
the coast of Brazil. The presence of protons suggested that this [illegible]
part of the inner radiation belt. Discussing the composition of the [illegible]
absorbed dose, the authors state that [illegible]% of it consisted of primary [illegible]
secondary charged particles of cosmic origin, 1[illegible]% consisted of [illegible]
γ-radiation, and 5% of protons of the inner radiation belt. The RBE [illegible]
for the last two components were not greater than 1 and 10 respectively [illegible]
the RBE value for charged cosmic particles is accepted [illegible]

[illegible]

APPROVED FOR RELEASE: 07/13/2001 CIA-RDP86-00513R001341020013-6"

"APPROVED FOR RELEASE: 07/13/2001 CIA-RDP86-00513R001341020013-6

could not be obtained), the biologic l e uivalent of the absorbed [illegible] registered on the second space vehicle will be equal to 40 mrem/day. If the correction for the tissue non-equivalent of the crystal of sodium iodide is taken into consideration, the absorbed dose will be equal to 50 mrem/day. The following conclusions were drawn: (1) The absorbed dose of 7 mrad/day, equivalent to 50 mrem/day, can be considered safe for long flights along a trajectory similar to that of the second Soviet space vehicle during the period when the Sun is in its quiet state. It is assumed, of course, that an astronaut will be protected by a layer of substance similar to that surrounding the radiometric equipment on board the second space vehicle; Chromospheric flares on the Sun can essentially increase the dose. [illegible] Papkov, A. F. Tupikin, G. I. Bol'shakova, L. K. Bocharov and S. N. V[illegible] are mentioned for their cooperation in the work. There are 2 figures [illegible] 10 references: 7 Soviet-bloc and 3 non-Soviet-bloc. The English-language references are: J. A. Simpson, Astrophys. J. Suppl. Series, 4, [illegible]; R. L. Arnoldy, R. A. Hoffman, J. R. Winkler, J. Geophys. Res., [illegible], 1960; J. A. Van Allen, J. Geophys. Res., 64, 217, 1959.

SUBMITTED: April 3, 1961

Card 3/5

APPROVED FOR RELEASE: 07/13/2001 CIA-RDP86-00513R001341020013-6"

"APPROVED FOR RELEASE: 07/13/2001 CIA-RDP86-00513R001341020013-6

32718
S/560/61/[illegible]
D045/D114

0 0150

21.6000

AUTHORS: Papkov, S. F., Pisarenko, N. F., Savenko, I. A., Tupikin, A. [illegible], and Shavrin, P. I.

TITLE: Radiometric equipment on the second Soviet space v[illegible]

SOURCE: Akademiya nauk SSSR. Iskusstvennyye [illegible] Moscow, 1961, 75-85

TEXT: Radiometric equipment installed on the second Soviet [illegible] for measuring the intensity of ionizing radiation and for determining [illegible] absorbed dose is described. A block diagram of the transmitter [illegible] given in fig. 3. The scintillation counter (A) registered (1) [illegible] ticles penetrating the walls of the vehicle, (2) γ-quanta of more than [illegible] kV, and (3) the energy release of the above-mentioned particles. The [illegible] (STS-5) gas discharge counters (Б) registered charged particles. [illegible] scintillation counter (B) measured the energy flow of comparatively [illegible] charged particles. The operational theory of the transmitter [illegible] separate [illegible] of the electronic system, [illegible] semi-conductor triodes [illegible]

Card 1/7

APPROVED FOR RELEASE: 07/13/2001 CIA-RDP86-00513R001341020013-6"

"APPROVED FOR RELEASE: 07/13/2001 CIA-RDP86-00513R001341020013-6

APPROVED FOR RELEASE: 07/13/2001 CIA-RDP86-00513R001341020013-6"