"APPROVED FOR RELEASE: Tuesday, August 01, 2000 CIA-RDP86-00513R001341

Determination of the Limits of a Submerged Surface Jump With a Surface-Ground Structure of the Flow

SOV/21-58-2-17/28

the submerged surface jump with a surface-ground structure of flow regime(V'), depending on the dimensions of the overflow toe, the height of the dam, and the hydraulic features of the flow. There are 3 graphs and 10 Soviet references.

ASSOCIATION: Institut gidrologii i gidrotekhniki AN UkrSSR (Institute of Hydrology and Hydraulic Engineering of the AS UkrSSR)

PRESENTED: By Member of the AS UkrSSR, G. I. Sukhomel

SUBMITTED: March 15, 1957

NOTE: Russian title and Russian names of individuals and institutions appearing in this article have been used in the transliteration

Card 2/2

APPROVED FOR RELEASE: Tuesday, August 01, 2000 CIA-RDP86-00513R0013411

"APPROVED FOR RELEASE: Tuesday, August 01, 2000 CIA-RDP86-00513R001341

124-1957-10-11600

Translation from: Referativnyy zhurnal, Mekhanika, 1957, Nr 10, p 58 (USSR)

AUTHOR: Pivovar, N. G.

TITLE: Calculation Method for the Reinforcement of the Bottoms Behind Spillway Dams (Sposob rascheta krepleniya dna za vodosbrosnymi plotinami)

PERIODICAL: Izv. In-ta gidrol. i gidrotekhn. AN UkSSR, 1956, Vol 14 (21), pp 23-36

ABSTRACT: In the opinion of the Author, the principal force acting on large reinforcing plates laid on a reverse filter (e.g., for spillway apron plates) is the lifting pressure under the plate caused by the pressure difference. The effect of pressure pulsations is not accounted for by the A., although, according to data from many investigators, the pressure pulsations have a considerable magnitude. Data on the velocities prevailing near the bottom and the pressure drop within the junction zone of the upper and lower water levels are studied in order to determine the type and dimensions of the bottom reinforcement required behind the spillways. The velocity prevailing near the bottom is, by

Card 1/2

APPROVED FOR RELEASE: Tuesday, August 01, 2000 CIA-RDP86-00513R0013411

"APPROVED FOR RELEASE: Tuesday, August 01, 2000 CIA-RDP86-00513R001341

124-1957-10-11600

Calculation Method for the Reinforcement of the Bottoms (cont.)

definition, measured at a level of 2 percent of the height of the dam. The pressure drop is the difference between the pressure in the surface section to be reinforced and the pressure prevailing in the tailwater basin. In order to obtain these data, the A. performed laboratory experiments on the hydraulics of the tailwater basin underneath a spillway dam, assuming the problem to be two dimensional and using the values: F = 16 - 62 related to the compressed section, and R = 10,000 - 70,000. The experimental data obtained by measuring the boundaries of the junction-zone regimen, the velocities near the bottom, and the pressures, are reduced to a dam height of 1 m according to the rules of gravitational similarity and their relationships are presented in a graph. Using these relationships, it is possible, in a given case, to provide calculations, based on the given parameter, as follows: The junction of the headwater and the tailwater and diagrams for the bottom-level velocities, as well as for the pressure drops in the submerged jump zone. The paper provides a method and calculation procedure for the reinforcement of the tailwater bottom by solid concrete plates as well as by perforated concrete plates for drainage, or by a method of gravel coverage.

Card 2/2

N. A. Preobrazhenskiy

APPROVED FOR RELEASE: Tuesday, August 01, 2000 CIA-RDP86-00513R0013411

"APPROVED FOR RELEASE: Tuesday, August 01, 2000 CIA-RDP86-00513R001341

SHVETS, G.I. [Shvets', H.I.]; ZIL'BAN, M.S.; KOBERNIK, S.G. [Kobernyk, S.H.]; OLEYNIK, A.Ye. [Oliinyk, O.IA.]; PIVOVAR, N.G. [Pyvovar, M.H.]; ROZOVSKIY, I.L. [Rozovs'kyi, I.L.]; SLOBODYAN, R.T.; DIDKOVSKIY, M.M. [Didkovs'kyi, M.M.], kand.tekhn.nauk, otv.red.; KRENTSEL', Sh.G. [Krentsel', Sh.H.], red.-leksikograf; SHIKAN, V.L., red.izd-va; BUNIY, R.O., tekhn.red.

[Russian-Ukrainian hydraulic-engineering dictionary; 13000 terms] Russko-ukrainskii gidrotekhnicheskii slovar'. 13000 terminov. Kiev, Izd-vo Akad.nauk USSR, 1960. XIV, 192 p. (MIRA 13:7)
(Hydraulic engineering--Dictionaries)
(Russian language--Dictionaries--Ukrainian)

APPROVED FOR RELEASE: Tuesday, August 01, 2000 CIA-RDP86-00513R0013411

"APPROVED FOR RELEASE: Tuesday, August 01, 2000 CIA-RDP86-00513R001341

PIVOVAR, N.G. [Pyvovar, M.H.], kand.tekhn.nauk

Calculation of relationships for determining the pressure on the bottom in the section of head and tail water conjugation below low-head gate dams in the presence of a dentated sill on the apron and a deepened pavement at its end. Visti Inst.gidrol.i gidr.AN URSR 18:19-23 '61. (MIRA 15:3)

(Spillways)

APPROVED FOR RELEASE: Tuesday, August 01, 2000 CIA-RDP86-00513R0013411

"APPROVED FOR RELEASE: Tuesday, August 01, 2000 CIA-RDP86-00513R001341

L 23837-66 EWT(d)/EWP(v)/EWP(k)/EWP(h)/EWP(1)
ACC NR: AP6007701

SOURCE CODE: UR/0413/66/000/003/0080/0081

AUTHOR: Pivovar, N. K.

ORG: none

.47

B

TITLE: Machine for mechanical testing of samples at high temperatures. Class 42, No. 178548

SOURCE: Izobreteniya, promyshlennyye obraztsy, tovarnyye znaki, no. 3, 1966, 80-81

TOPIC TAGS: test chamber, temperature research, laboratory instrument

ABSTRACT: This Author Certificate presents a machine for mechanical testing of samples at high temperatures. The machine contains a heating device in the form of a closed shell with a cylindrical screen as the heating element mounted in the shell. The sample is mounted inside the heating element, and the space between the shell and screen is filled with a coolant (see Fig. 1). To continuously maintain the heating process over long time periods (on the order of 50 000 hours), the heating element is in sections assembled on folding panels which cool the screen. Each section is supplied from an independent transformer.

Card 1/2

UDC: 620.172.251.28.05

APPROVED FOR RELEASE: Tuesday, August 01, 2000 CIA-RDP86-00513R0013411

"APPROVED FOR RELEASE: Tuesday, August 01, 2000 CIA-RDP86-00513R001341

L 23837-66

ACC NR: AP6007701

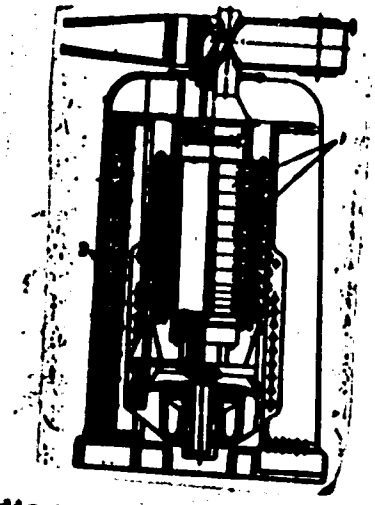

Fig. 1. 1 - sections; 2 - isolated transformers.

Orig. art. has: 1 diagram.

SUB CODE: 14/ SUBM DATE: 16Oct64

Card 2/2

APPROVED FOR RELEASE: Tuesday, August 01, 2000 CIA-RDP86-00513R0013411

"APPROVED FOR RELEASE: Tuesday, August 01, 2000 CIA-RDP86-00513R001341

1. [illegible], S., Eng.

2. USSR (600)

4. Tractors

7. "Belarus" tractor, [illegible], [illegible], No. [illegible], 19[illegible].

9. Monthly List of Russian Accessions, Library of Congress, April, [illegible], Uncl.

APPROVED FOR RELEASE: Tuesday, August 01, 2000 CIA-RDP86-00513R0013411

"APPROVED FOR RELEASE: Tuesday, August 01, 2000 CIA-RDP86-00513R001341

PIVOVAR, S.G. [Pyvovar, S.H.], inzh.-mekhanik

New flax threshing machinery. Mekh.sil'.hosp. 8 no.9:29-31 S '59. (MIRA 13:1)

(Flax processing machinery) (Threshing machines)

APPROVED FOR RELEASE: Tuesday, August 01, 2000 CIA-RDP86-00513R0013411

"APPROVED FOR RELEASE: Tuesday, August 01, 2000 CIA-RDP86-00513R001341

BONDARENKO, M.G. [Bondarenko, M.H.]; VORONEZHSKIY, V.I. [Voronezhs'kyi, V.I.]; KITAYTSEVA, Z.P.; KOVAL', M.M.; KOLODA, V.D.; KORSAKOV, O.O.; KREMINSKAYA, Ye.D. [Kremins'ka, E.D.]; KUKTA, G.M. [Kukta, H.M.], insh.-mekhan.; PIVOVAR, S.G. [Pivovar, S.H.]; SOLOVEY, V.I.; OLEFIRENKO, G.A. [Olefirenko, H.A.], red.; GULENKO, O.I. [Hulenko, O.I.], tekhn.red.

[New agricultural machines] Novi sil's'kohospodars'ki mashyni. Kyiv, Dersh.vyd-vo sil's'kohospodars'koi lit-ry URSR, 1959. 231 p. (MIRA 13:4)

(Agricultural machinery)

APPROVED FOR RELEASE: Tuesday, August 01, 2000 CIA-RDP86-00513R0013411

"APPROVED FOR RELEASE: Tuesday, August 01, 2000 CIA-RDP86-00513R001341

PIVOVAR, S. G.

USSR (600)

Harvesting Machinery

Mechanization of hemp harvest and threshing. Dost sel'khoz. no. 9, 195[illegible].

Monthly List of Russian Accessions, Library of Congress, December 1952. Unclassified.

APPROVED FOR RELEASE: Tuesday, August 01, 2000 CIA-RDP86-00513R0013411

"APPROVED FOR RELEASE: Tuesday, August 01, 2000 CIA-RDP86-00513R001341

APPROVED FOR RELEASE: Tuesday, August 01, 2000 CIA-RDP86-00513R0013411

"APPROVED FOR RELEASE: Tuesday, August 01, 2000 CIA-RDP86-00513R001341

L 61817-65 EWG(j)/EWP(e)/EWT(m)/EWP(w)/EPF(c)/EWP(i)/EPF(n)-2/EWG(m)/
EWA(d)/T/EWP(t)/EWP(b) Pr-4/Pu-4/Pu-4 LJP(c)/AEDC JD/JG/AT/WH
ACCESSION NR: AP5018460 UR/0131/65/000/007/0037/0041
666.76:621.3.011.2

AUTHOR: Shakhtin, D.M.; Levintovich, E.V.; Pivovar, T.L.; Yeliseyeva, G.G

TITLE: Electrical conductivity of refractory oxides at high temperatures

SOURCE: Ogneupory, no. 7, 1965, 37-41

TOPIC TAGS: refractory oxide, electrical conductivity, zirconium refractory, aluminum refractory, electrical resistance, magnesium refractory

ABSTRACT: The article deals with the temperature dependence of the electrical conductivity of refractory materials prepared from oxides of aluminum, magnesium, calcium, and zirconium (see Fig. 1 of the Enclosure). The measurements were carried out at 900-2300C in a special furnace, both in an inert medium (argon or nitrogen) at 1 atm and in a vacuum. The experimental conditions employed permitted the measurement of high electrical resistances at high temperatures. The maximum resistance was displayed by samples containing 99.67 and 98.52% MgO. The presence of ferric oxide decreased the resistance of the materials. The influence of porosity on the latter was also investigated. In order of increasing electrical resistivity, the materials can be arranged as follows: zirconium dioxide stabilized with calcium oxide

Card 1/3

APPROVED FOR RELEASE: Tuesday, August 01, 2000 CIA-RDP86-00513R0013411

"APPROVED FOR RELEASE: Tuesday, August 01, 2000 CIA-RDP86-00513R001341

L 61817-65
ACCESSION NR: AP5018460

2

< calcium zirconate < strontium zirconate < calcium oxide, < spinel < magnesium oxide < aluminum oxide. As a result of the study, optimum conditions were selected for determining the electrical resistance of various refractories. Orig. art. has: 5 figures and 3 tables.

ASSOCIATION: Ukrainskiy nauchno-issledovatel'skiy institut ogneuporov (Ukrainian Scientific Research Institute of Refractories)

SUBMITTED: 00 ENCL: 01 SUB CODE: MT

NO REF SOV: 010 OTHER: 002

Refractory Compounds

27

Card 2/3

APPROVED FOR RELEASE: Tuesday, August 01, 2000 CIA-RDP86-00513R0013411

"APPROVED FOR RELEASE: Tuesday, August 01, 2000 CIA-RDP86-00513R001341

L 61817-65

ACCESSION NR: AP5018460

ENCLOSURE: 01

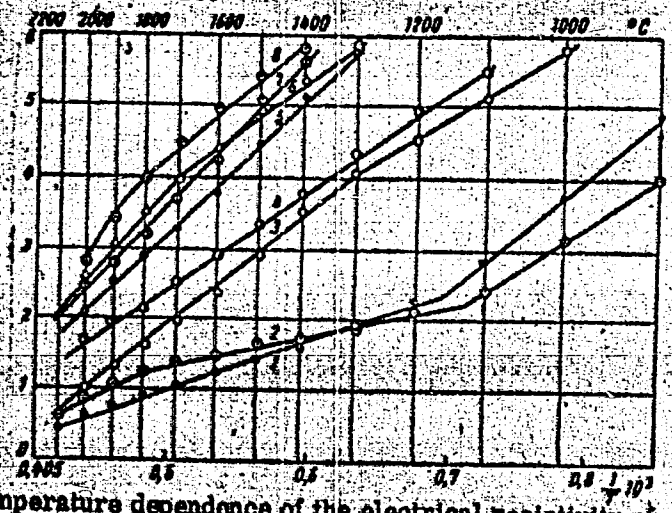

Fig. 1. Temperature dependence of the electrical resistivity of certain refractories: 1 - zirconium dioxide stabilized with 10% calcium oxide; 2 - zirconium dioxide stabilized with 6% calcium oxide; 3 - calcium zirconate; 4 - strontium zirconate; 5 - calcium oxide; 6 - spinel; 7 - magnesium oxide; 8 - aluminum oxide.

Card 3/3

APPROVED FOR RELEASE: Tuesday, August 01, 2000 CIA-RDP86-00513R0013411

"APPROVED FOR RELEASE: Tuesday, August 01, 2000 CIA-RDP86-00513R001341

PIVOVAROV, A.

Good machines for agriculture. p.567

SOTSIALISTLIK POLLUMAJANDUS. Tallinn, Estonia. Vol. 14, no. 12, June 1959

Monthly List of East European Accessions (EEAI), LC. Vol. 8, No. 9, September 1959
Uncl.

APPROVED FOR RELEASE: Tuesday, August 01, 2000 CIA-RDP86-00513R0013411

"APPROVED FOR RELEASE: Tuesday, August 01, 2000 CIA-RDP86-00513R001341

KOLESNIKOV, A.G.; PIVOVAROV, A.A.

Calculation of the autumnal cooling of water reservoirs. Dokl.AN SSSR 93 no.6:1015-1018 D '53. (MLRA 6:12)

1. Fizicheskiy fakul'tet Moskovskogo gosudarstvennogo universiteta. Predstavleno akademikom V.V.Shuleykin.

(Water-storage)

APPROVED FOR RELEASE: Tuesday, August 01, 2000 CIA-RDP86-00513R0013411

"APPROVED FOR RELEASE: Tuesday, August 01, 2000 CIA-RDP86-00513R001341

PIVOVAROV, A.A.

Determination of the coefficient of the turbulent vertical temperature distribution in the ocean. Trudy MGI 4:94-101 '54. (MLRA 8:6)

(Ocean temperature)

APPROVED FOR RELEASE: Tuesday, August 01, 2000 CIA-RDP86-00513R0013411

"APPROVED FOR RELEASE: Tuesday, August 01, 2000 CIA-RDP86-00513R001341

PIVOVAROV, A.A.

Computation of winter temperature modifications in water reservoirs. Dokl. AN SSSR 94 no. [illegible] F 54. (MLRA 7 [illegible])

1. Moskovskiy gosudarstvennyy universitet im. M.V. Lomonosova. Predstavleno akademikom O.Yu. Shmidtom.
(Reservoirs) (Lakes- Temperatures)

APPROVED FOR RELEASE: Tuesday, August 01, 2000 CIA-RDP86-00513R0013411

"APPROVED FOR RELEASE: Tuesday, August 01, 2000 CIA-RDP86-00513R001341

KOLESNIKOV, A.G.; PIVOVAROV, A.A.

Calculation of heat balance and its individual components according to the atmospheric temperature. Trudy MGI 6:107-119 '55. (MLRA 9:6)
(Atmospheric temperature)

APPROVED FOR RELEASE: Tuesday, August 01, 2000 CIA-RDP86-00513R0013411

"APPROVED FOR RELEASE: Tuesday, August 01, 2000 CIA-RDP86-00513R001341

PIVOVAROV, A. A.

USSR/Geophysics - Hydrophysics

Card 1/1 Pub. 22 - 18/59

Authors : Kalesnikov, A. G., and Pivovarov, A. A.

Title : Calculation of the daily temperature variation of a sea by the total radiation and temperature of the air

Periodical : Dok. AN SSSR 102/2, 261-264, May 11, 1955

Abstract : A method is described for determining the daily temperature variation of a sea by taking into consideration only the daily variations of the air temperature at a certain altitude and the total radiation of the sea surface and considering the sea surface albedo and thermal characteristics of the water and air. Two USSR references (1947-1954).

Institution : Acad. of Sc., USSR, Marine Hydrophysics Institute

Presented by : Academician V. V. Shuleykin, February 9, 1955

APPROVED FOR RELEASE: Tuesday, August 01, 2000 CIA-RDP86-00513R0013411

"APPROVED FOR RELEASE: Tuesday, August 01, 2000 CIA-RDP86-00513R001341

KOLESNIKOV, A.G.;PIVOVAROV, A.A.

Method of calculating soil temperature on the basis of a given state of atmospheric temperature. Vest.Mosk.un. 10 no.8:59-65 Ag '55. (MLRA 9:1)

1.Kafedra fiziki morya.
(Soil temperature) (Atmospheric temperature)

APPROVED FOR RELEASE: Tuesday, August 01, 2000 CIA-RDP86-00513R0013411

"APPROVED FOR RELEASE: Tuesday, August 01, 2000 CIA-RDP86-00513R001341

KOLESNIKOV, A.G.; PIVOVAROV, A.A.;

Feasibility of using air temperature as a basis for computing the resulting heat balance on a reservoir surface. Izv.AN SSSR.Ser. geofiz. no.5:534-540 My '56. (MLRA 9:8)

1. Moskovskiy gosudarstvennyy universitet imeni M.V. Lomonosova. (Meteorology, Maritime) (Atmospheric temperature)

APPROVED FOR RELEASE: Tuesday, August 01, 2000 CIA-RDP86-00513R0013411

"APPROVED FOR RELEASE: Tuesday, August 01, 2000 CIA-RDP86-00513R001341

S/124/60/000/006/0[illegible]
A005/A001

Translation from: Referativnyy zhurnal, Mekhanika, 1960, No. 6, p. 115, # [illegible]

AUTHORS: Kolesnikov, A.G., Pivovarov, A.A.

TITLE: On the Correlation Between the Coefficients of Turbulence and Heat Exchange in the Atmospheric Layer Near the Sea Surface

PERIODICAL: Tr. Morsk. gidrofiz. in-ta. AN SSSR, 1958, Vol. 13, pp. 65-72

TEXT: The author considers two methods for determining the turbulent heat current through the sea surface. In the first variant, the heat current is adopted in the form:

$$Q = \alpha [t_1(0, \tau) - t_2(h, \tau)],$$

where t_1 is the temperature at the sea surface, t_2 is the temperature of the air at the altitude h, α is the heat exchange coefficient. In the second variant, it is assumed

$$Q = -c_2 \rho_2 \left(k_2 \frac{\partial t_2}{\partial z} \right)_{z=0},$$

where c_2, ρ_2 are the heat capacity and density of the air, k_2 is the turbulence coefficient. The two methods mentioned are compared with each other with respect

Card 1/ 2

APPROVED FOR RELEASE: Tuesday, August 01, 2000 CIA-RDP86-00513R0013411

"APPROVED FOR RELEASE: Tuesday, August 01, 2000 CIA-RDP86-00513R001341

S/124/60/000/006/015/030
A005/A001

On the Correlation Between the Coefficients of Turbulence and Heat Exchange in the Atmospheric Layer Near the Sea Surface

to their consequences for the sea temperature profile. In the first variant, the temperature is calculated from the heat conductance equation with the constant coefficient under the condition of heat equilibrium at the boundary (the time-dependent course of the radiative balance and the evaporation heat are assumed to be prescribed). In the second variant, the equation of the turbulent heat conductance in the air (with variable coefficient) is used additionally, which is solved for a prescribed course of the temperature at the altitude h. The comparison of the solutions shows that these may be identical, with a certain approximation, if the heat exchange coefficient α is expressed properly through the parameters of the turbulence coefficient $k_2(z)$. In the simplest case, assuming that a laminar boundary layer does not exist, such an expression has the form

$$\alpha = \frac{c_2 \rho_2 \nu^2 v(h)}{\ln(h/z_0) \ln[(k_0 + \nu v_* h)/k_0]} .$$

Under consideration of a laminar sublayer, the value of α somewhat decreases.

A.S. Monin

Translator's note: This is the full translation of the original Russian abstract.

Card 2/2

APPROVED FOR RELEASE: Tuesday, August 01, 2000 CIA-RDP86-00513R0013411

"APPROVED FOR RELEASE: Tuesday, August 01, 2000 CIA-RDP86-00513R001341

APPROVED FOR RELEASE: Tuesday, August 01, 2000 CIA-RDP86-00513R0013411

"APPROVED FOR RELEASE: Tuesday, August 01, 2000 CIA-RDP86-00513R001341

3,1800

20334
S/188/60/000/006/007/0
B101/B204

AUTHORS: Pivovarov, A. A., Lavorko, V. S.

TITLE: Vertical attenuation of solar radiation in the seas

PERIODICAL: Vestnik Moskovskogo universiteta. Seriya 3. fizika, astronomiya, no. 6, 1960, 59-63

TEXT: A report is given on measurements of the solar radiation penetrating to various depths of the sea, which were made on the research vessel "Moskovskiy universitet" in Summer and Fall of 1959 in the Black Sea. As a measuring device a thermoelectric pyranometer system Yu. D. Yenishevskiy in a water-tight cover, which was connected with a ГСА-1 (GSA-1) galvanometer by means of a flexible line. The horizontal position of the pyranometer was warranted by loading it with appropriate weights. At the same time, the incident and the reflected radiation were measured by means of an albedometer A table gives the measured values, which were obtained on October 18-19, 1959 on the Caucasian coast, 8 miles from the shore under a cloudless sky, and a calm atmosphere; the sea was 78 m deep, and the sun's altitude 30-37°. From the equation for the

Card 1/4

APPROVED FOR RELEASE: Tuesday, August 01, 2000 CIA-RDP86-00513R0013411

"APPROVED FOR RELEASE: Tuesday, August 01, 2000 CIA-RDP86-00513R001341

radiation I_z reaching the depth z, which was suggested by A. G. Kolesnikov:

$I_z = \sum_{m=1}^{\nu} \exp(-\beta_m z)$ (1) (I_m - intensity of the m-section of the spectrum, β_m - absorption coefficient) the empirical equation:

$I_z = I_0 [0.23\exp(-27z) + 0.20\exp(-2.35z) + 0.57\exp(-0.30z)]$ (2) was derived. The values calculated by means of this equa n are also given in the table. The following attenuation coefficients w.. found: for 1 - 7 m depth 0.32 m^{-1}; for 0.2 - 1 m depth 0.46 m^{-1}, and for the upper 20 cm 2.2 m^{-1}. Fig. 2 gives measured results obtained on August 13-15, 1959 in the shallow north-western part of the Black Sea: 33 m, and on August 26-27, in the deeper part (depth 100 m), sun's altitude greater than 40°. The attenuation coefficients were 0.20 m^{-1} in 1-10 m depth in shallow water, and 0.16 m^{-1} in deep water. These data show good agreement with the measurements carried out by S. G. Boguslavskiy (also in the Black Sea). Mention is made of analogous measurements

APPROVED FOR RELEASE: Tuesday, August 01, 2000 CIA-RDP86-00513R0013411

"APPROVED FOR RELEASE: Tuesday, August 01, 2000 CIA-RDP86-00513R001341

20334

Vertical attenuation of ... S/188/60/000/006/007/011
B101/B204

carried out by P. P. Kuz'min in the Kandalakshskiy Bay of the White Sea, and by T. V. Kirillova and R. F. Byurig in the Sevan Sea. There are 2 figures, 1 table, and 4 Soviet-bloc references.

ASSOCIATION: Moskovskiy gosudarstvennyy universitet, Kafedra fiziki morya i vod sushi (Moscow State University, Department of Physics of Sea and Inland Waters)

SUBMITTED: April 23, 1960

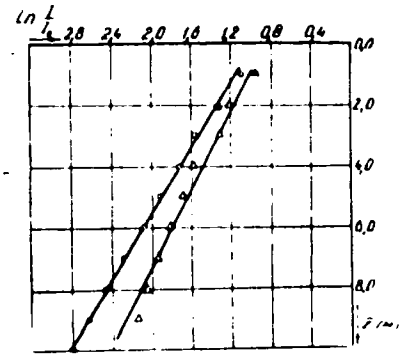

Legend to Fig. 2:
o - Mean values August 14-15, 1959;
△ - Mean values August 27, 1959

Card 3/4

APPROVED FOR RELEASE: Tuesday, August 01, 2000 CIA-RDP86-00513R0013411

"APPROVED FOR RELEASE: Tuesday, August 01, 2000 CIA-RDP86-00513R001341

20334

Vertical attenuation of ...

S/188/60/000/006/007/01
B101/204

Значения $10^3 \frac{I_z}{I_0}$

1 Дата	2 Глубина измерений в м													
	0,0	0,2	0,4	0,6	0,8	1,0	1,5	2,0	2,5	3,0	4,0	5,0	6,0	7,0
18 X 59 г.	1000	639	582	518	479	441	383	311	272	234	169	130	93	70
19 X 59 г.	1000	639	590	532	481	440	366	315	265	226	160	129	92	—
3 Среднее:														
по вычислениям a	1000	662	584	525	479	441	370	315	270	232	172	127	94	70
по измерениям b	1000	639	584	525	480	441	374	313	268	230	164	130	92	70

Legend to the table:
1) Date; 2) Depth of measurement, m;
3) Mean value: a) calculated,
b) measured.

Card 4/4

APPROVED FOR RELEASE: Tuesday, August 01, 2000 CIA-RDP86-00513R0013411

"APPROVED FOR RELEASE: Tuesday, August 01, 2000 CIA-RDP86-00513R001341

S/050/61/000/001/005/007
B012/B058

3.9000 (1041, 1109, 1327)

AUTHORS: Pivovarov, A. A., Lavorko, V. S.

TITLE: The Diurnal Course of the Solar Radiation Components and the Albedo of the Sea

PERIODICAL: Meteorologiya i gidrologiya, 1961, No. 1, pp. 43-46

TEXT: During the 1959 expedition on the vessel "Moskovskiy Universitet", the authors continuously recorded the incident total radiation and the radiation reflected by the sea surface. Thermoelectric pyranometers (system by Yu. D. Yanichevskiy), which were connected to a three-point recording galvanometer [illegible] (SG), were used as radiation receivers. The galvanometer was mounted on a Cardanic suspension, specially built for the purpose at the masterskiye fizicheskogo fakul'teta MGU (Workshops of the Physics Branch of MGU). The absolute graduation of the pyranometers was made at the Karadagskaya aktinometricheskaya observatoriya (Karadag Actinometric Observatory). The observations made in August and October of 1959 with cloudless sky in the open part of the Black Sea under various wave condi-

Card 1/4

88349

APPROVED FOR RELEASE: Tuesday, August 01, 2000 CIA-RDP86-00513R0013411

"APPROVED FOR RELEASE: Tuesday, August 01, 2000 CIA-RDP86-00513R001341

tions were made use of in this study. The observations of the diurnal course of the incident total radiation over the sea showed that it is symmetric as referred to the noon time. The data obtained were used to check the formulas for calculating the diurnal course of total radiation according to the sun's altitude with cloudless sky. The formula by M. Ye. Berlyand (Ref. 1) selected for the purpose is similar to the formula by Kastrov and may be written down as formula (1):

$$I_c = S_0 \sin^2 h_\odot / (\sin h_\odot + f)$$

$h_\odot$ is the sun's altitude, S_0 the solar constant. The results of the check showed good agreement of formula (1) with the observation data. According to the observations made by the authors, the diurnal course of total radiation at a sun's altitude of from 1[illegible] to 50° depends linearly on the sun's altitude: I_c = [illegible] $h_\odot$ - [illegible] (2). The equation I_{scatt}/I_{dir} = 18.4 + 1.01·1[illegible]$^{-2}$ exp [illegible] $(\frac{\pi}{2} - h_\odot)$] could be found for the dependence of the relation $I_{scattered}/I_{direct}$ on the sun's altitude at altitudes of

APPROVED FOR RELEASE: Tuesday, August 01, 2000 CIA-RDP86-00513R0013411

"APPROVED FOR RELEASE: Tuesday, August 01, 2000 CIA-RDP86-00513R001341

from 10 to 40°, $h_\odot$ being expressed in radians and the relation I_{scatt}/I_{dir} in %. This formula is similar to formula (4)

$$A = 3.30 + 6.96 \cdot 10^{-2} \exp\left[3.90\left(\frac{\pi}{2} - h_\odot\right)\right]$$

obtained for the dependence of the total-radiation sea albedo on the sun's altitude. The curve calculated from this formula is compared with that obtained from the formula by K. Ya. Kondrat'yev and L. A. Kudryavtseva (Ref. 4) for the dependence of the total-radiation sea albedo on the sun's altitude with cloudless sky and smooth water surface. The comparison shows that the total-radiation sea albedo mainly depends on the movement of the waves. The sea albedo for scattered radiation and smooth water surface was calculated by using the formula by Kondrat'yev and Kudryavtseva as well as the ratio of direct to scattered solar radiation over the sea. The calculation results showed that the sea albedo for scattered radiation depends very little on the sun's altitude. On the basis of the analysis of experimental material it can be assumed that the total radiation over the

APPROVED FOR RELEASE: Tuesday, August 01, 2000 CIA-RDP86-00513R0013411

"APPROVED FOR RELEASE: Tuesday, August 01, 2000 CIA-RDP86-00513R001341

88349

The Diurnal Course of the Solar Radiation Components and the Albedo of the Sea

S/050/61/000/001/005/007
B012/B058

sea with cloudless sky is a linear function of the sun's altitude in the range of the sun's altitudes from 15 to 50°. This relation is expressed by formula (2). Starting from f = 0.180, formula (1) also produces good agreement with the observation data. The albedo for the total radiation can be calculated from formula (4) at waves of from 2 to 4 points. There are 3 figures and 4 Soviet references.

Card 4/4

APPROVED FOR RELEASE: Tuesday, August 01, 2000 CIA-RDP86-00513R0013411

"APPROVED FOR RELEASE: Tuesday, August 01, 2000 CIA-RDP86-00513R001341

PIVOVAROV, A.A.

Effect of solar radiation penetrating the sea on the water temperature. Okeanologiia 3 no.2:213-218 '63. (MIRA 16:4)

1. Moskovskiy gosudarstvennyy universitet imeni Lomonosova.
(Ocean temperature)

APPROVED FOR RELEASE: Tuesday, August 01, 2000 CIA-RDP86-00513R0013411

"APPROVED FOR RELEASE: Tuesday, August 01, 2000 CIA-RDP86-00513R001341

ANISIMOVA, Ye.P.; PIVOVAROV, A.A.; OKHANOVA, N.A.

Dependence of the parameter of the roughness of the sea surface on wind speed. Izv. AN SSSR. Fiz. atm. i okeana 1 no.10:11[illegible] '65. (MIRA [illegible])

1. Moskovskiy gosudarstvennyy universitet.

APPROVED FOR RELEASE: Tuesday, August 01, 2000 CIA-RDP86-00513R0013411

"APPROVED FOR RELEASE: Tuesday, August 01, 2000 CIA-RDP86-00513R001341

ACC NR: AP6033814 (A, N) SOURCE CODE: UR/0188/66/000/004/0009/0014

AUTHOR: Pivovarov, A. A.

ORG: Chair of Physics of the Sea and Inland Waterways, Moscow State University (Kafedra fiziki morya i vod sushi Moskovskogo gosudarstvennogo universiteta)

TITLE: Prediction of the mean vertical subglacial water temperature in circulating bodies of water

SOURCE: Moscow. Universitet. Vestnik. Seriya III. Fizika, astronomiya, no. 4, 1966, 9-14

TOPIC TAGS: Laplace transform, waterway engineering, inland waterway, ~~inland water-way transportation,~~ ice, temperature control, flow temperature measurement, boundary layer temperature, long range weather forecasting

ABSTRACT: The thermal balance for the ice formation period in a circulating body of water is discussed since not much research has been done in this direction. The problem is complicated by the phase transformations that take place in ice and in water. A consideration of the heat exchange between the water and the atmosphere through a snow-ice layer must be combined with an analysis of the heat transfer in the water--waterbed system. In the suggested model for the vertical determination of the subglacial temperature, a water basin of limited depth (h) is considered; the coordinate

Card 1/3 UDC: 551.48 : 53.5

APPROVED FOR RELEASE: Tuesday, August 01, 2000 CIA-RDP86-00513R0013411

"APPROVED FOR RELEASE: Tuesday, August 01, 2000 CIA-RDP86-00513R001341

ACC NR: AP6033814

origin is at the surface of the water-ice boundary. The x-axis is positive in the direction of the flow, the z-axis is positive in a vertical direction, down from the bottom side of the ice layer. All values relating to water are denoted by index 1; values relating to the waterbed are denoted by index 2. Assuming that the heat propagation in the vertical and in the horizontal planes is by turbulent exchange and flow, respectively, the water temperature field can be defined by the equation

$$\frac{\partial t_1}{\partial \tau} + v_1 \frac{\partial t_1}{\partial x} = \frac{\partial}{\partial z}\left[k_1 \frac{\partial t_1}{\partial z}\right] + \frac{q_1}{c_1 \rho_1},$$

where q_1 is the thermal discharge per unit volume on account of the dissipation of the flow energy and of other sources; c_1, ρ_1 are the calorific capacity and density of water, respectively; k_1 is the coefficient of turbulent heat exchange; v_1 is the speed of flow. With certain boundary conditions and assumptions regarding the vertical temperature distribution and the water temperature in the headwaters, a generalized solution of the problem is obtained using a Laplace transform. The equation of thermal conductivity of the bed in the form

$$\frac{\partial t_2}{\partial \tau} = k_2 \frac{\partial^2 t_2}{\partial z^2}$$

is used to determine the thermal flow from the bed, considering that it has two components: one reflects the effects of the initial thermal reserve in the bed at the

Card 2/3

APPROVED FOR RELEASE: Tuesday, August 01, 2000 CIA-RDP86-00513R0013411

"APPROVED FOR RELEASE: Tuesday, August 01, 2000 CIA-RDP86-00513R001341

ACC NR: AP6034011 (N) SOURCE CODE: UR/0213/66/006/005/0881/0885

AUTHOR: Voskanyan, A. G.; Pivovarov, A. A.; Khundzhua, G. G.

ORG: Physics Department, Moscow State University im. M. B. Lomonosov (Moskovskiy gosudarstvennyy universitet. Fizicheskiy fakul'tet)

TITLE: Direct recording of water-temperature gradients in the sea

SOURCE: Okeanologiya, v. 6, no. 5, 1966, 881-885

TOPIC TAGS: oceanographic equipment, oceanographic instrument, sea water, resistance thermometer, pressure gage, temperature measurement

ABSTRACT: The authors describe a newly developed unit for the direct and continuous recording of water-temperature gradients in the sea to a depth of 250 m. The unit utilizes standard IS-264A platinum resistance thermometers and provides continuous recording of temperature differences accurate to 0.02C in the 5—25C range with a simultaneous depth record accurate to 1%. The shipboard recording equipment consists of two EPP-09M3 recording potentiometers connected to the submerged instrument package by an RShM multicore cable. The instrument is powered by 220-volt, 50-cycle, a-c current. An overall circuit diagram is shown in Fig. 1. The temperature sensors (R_1, R_2, R_3, R_4) make up opposite arms of the measurement bridge and form a single system consisting of two paired sensor sets (see Fig. 2). The depth sensor consists of a diaphragm manometer with potentiometric output. Various other aspects of the

Card 1/3

UDC: 551.46.087

APPROVED FOR RELEASE: Tuesday, August 01, 2000 CIA-RDP86-00513R0013411

"APPROVED FOR RELEASE: Tuesday, August 01, 2000 CIA-RDP86-00513R001341

ACC NR: AP6034011

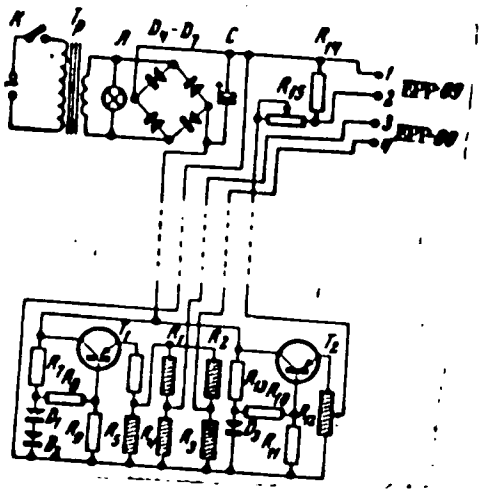

Fig. 1. Circuit diagram of temperature-measurement system.

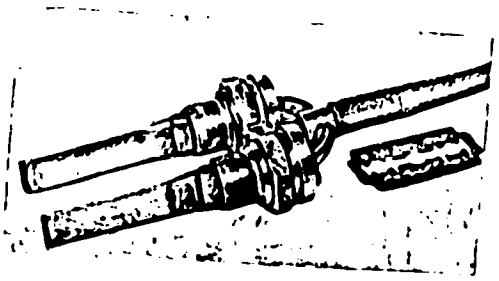

Fig. 2. Paired temperature sensor

circuitry, design, and determination of the instrument's basic parameters are re-

Card 2/3

APPROVED FOR RELEASE: Tuesday, August 01, 2000 CIA-RDP86-00513R0013411

"APPROVED FOR RELEASE: Tuesday, August 01, 2000 CIA-RDP86-00513R001341

ACC NR: AP6034011

viewed. For measurement, the paired sensors are mounted in a special holder on a 1-m-long rod attached to the instrument-package casing. The temperature sensors may be moved along the rod, thus changing the measurement base between them, and the pressure sensor is located on the top of the casing. The recommended descent rate for the package is 0.5 m/sec or less. Thorough testing and analysis of obtained results have demonstrated the unit's reliability and effectiveness in studying the structure of temperature fields in the sea. Orig. art. has: 3 formulas and 3 figures.

SUB CODE: 08, 09, 14/ SUBM DATE: none/ ORIG REF: 001/ OTH REF: 001/ ATD PRESS: 5100

Card 3/3

APPROVED FOR RELEASE: Tuesday, August 01, 2000 CIA-RDP86-00513R0013411

"APPROVED FOR RELEASE: Tuesday, August 01, 2000 CIA-RDP86-00513R001341

PIVOVAROV, A.A.; ANISIMOVA, Ye.P.; YERIKOVA, A.N.

Diurnal variation of albedo and solar radiation penetrating the sea. Izv. AN SSSR. Fiz. atm. i okeana 1 no.11:1216-1219 N '65. (MIRA 18:12)

1. Moskovskiy gosudarstvennyy universitet. Submitted January 15, 1965.

APPROVED FOR RELEASE: Tuesday, August 01, 2000 CIA-RDP86-00513R0013411

"APPROVED FOR RELEASE: Tuesday, August 01, 2000 CIA-RDP86-00513R001341

ACC NR: AP5028362 GW

SOURCE CODE: UR/0362/65/001/011/1216/1219

AUTHOR: Pivovarov, A. A.; Anisimova, Ye. P.; Yerikova, A. N.

ORG: Moscow State University (Moskovskiy gosudarstvennyy universitet)

TITLE: Diurnal rate of the albedo and the penetration of solar radiation into sea water

SOURCE: AN SSSR. Izvestiya. Fizika atmosfery i okeana, v. 1, no. 11, 1965, 1216-1219

TOPIC TAGS: albedo, solar radiation, thermoelectric pyranometer, total radiation

ABSTRACT: The albedo and the solar radiation which penetrated into the Black Sea have been investigated in July and August 1964, using the research vessel "Moskovskiy universitet". Measurements were made with thermoelectric pyranometers suspended on gimbals six meters from the vessel and three meters above the water's surface. The total radiation increases rapidly from 0.2 cal/cm^{2}min when the height of the sun is 10° to 1.4 cal/cm^{2}min with the height at 60°. The reflected radiation amounts to about 0.07 cal/cm^{2}min and changes slightly when the height of the sun is more than 20°. The albedo of the surface of the sea caused by the total radiation under a cloudless sky is determined by an empirical formula, which is represented graphically in the original article. A special formula is given for the total incident solar radiation

Card 1/2

UDC: 551.463.5

APPROVED FOR RELEASE: Tuesday, August 01, 2000 CIA-RDP86-00513R0013411

"APPROVED FOR RELEASE: Tuesday, August 01, 2000 CIA-RDP86-00513R001341

L 6114-66

ACC NR: AP5028362

from which the energy which has penetrated into the water is computed; this is represented graphically in the original article. Orig. art. has: 2 figures and 11 formulas.

SUB CODE: AA/ SUBM DATE: 15Jan65/ ORIG REF: 004/ ATD PRESS: 4143

[EG]

APPROVED FOR RELEASE: Tuesday, August 01, 2000 CIA-RDP86-00513R0013411

"APPROVED FOR RELEASE: Tuesday, August 01, 2000 CIA-RDP86-00513R001341

ANISIMOVA, Ye.P.; PIVOVAROV, A.A., kand. fiz.-matem. nauk

Calculation of the coefficients of the vertical turbulent exchange of heat in seas and reservoirs. Meteor. i gidrol. no.2:33-38 F '66. (MIRA 19:2)

1. Moskovskiy gosudarstvennyy universitet. Submitted March 6, 1964.

APPROVED FOR RELEASE: Tuesday, August 01, 2000 CIA-RDP86-00513R0013411

"APPROVED FOR RELEASE: Tuesday, August 01, 2000 CIA-RDP86-00513R001341

KOLESNIKOV, A.G.; PIVOVAROV, A.A.

Calculating the rate of cooling of reservoirs in fall. Vest. Mosk. un. Ser. mat. mekh., astron., fiz., khim. 11 no.2:47-52 '56.(MIRA 10:12)

1. Kafedra fiziki morya i vod sushi Moskovskogo gosudarstvennogo universiteta.

(Reservoirs)

APPROVED FOR RELEASE: Tuesday, August 01, 2000 CIA-RDP86-00513R0013411

"APPROVED FOR RELEASE: Tuesday, August 01, 2000 CIA-RDP86-00513R001341

PIVOVAROV, A. I.

9(4) PHASE I BOOK EXPLOITATION SOV/1778

Nauchno-tekhnicheskoye obshchestvo priborostroitel'noy promyshlennosti. Moskovskoye pravleniye

Tranzistornaya elektronika v priborostroyenii; sbornik trudov konferentsii (Transistor Electronics in the Instrument-making Industry; Collection of Conference Transactions) Moscow, Gosenergis, 1959. 289 p. 1,400 copies printed.

Ed.: N.I. Chistyakov, Doctor of Technical Sciences, Professor; Ed. of Publishing House: S.D. Khasatova; Tech Ed.: V.P. Bochin; Managing Ed.: A.S. Zaymovskaya, Engineer.

PURPOSE: The book is intended for scientific and engineering personnel of the instrument-making and radio industries engaged in the development of electronic and radio equipment.

COVERAGE: The authors of this collection of articles discuss the theory, principle of operation, calculation and application of electronic circuits using transistors. They also describe transistor application in measuring circuits, computers, radio and automatic and remote control circuits. The book is based on transactions of the Scientific and Engineering Conference organized by NTO in Moscow in December 1956. The conference discussed 54 papers on thermistors, photocells, thermocouples, cooling elements, nonlinear capacitors, crystal diodes, and transistors. A considerable number of these papers have been included in the present book. No personalities are mentioned. References appear at the end of each article.

TABLE OF CONTENTS:

A.S. Shaftan, A.A. Petrovskiy, A. Ya. Nekrasovskiy, Engineers. New Relay for Signalling and Control
The authors discuss the construction and 230

Card 9/12

operation of the REUV-2 electronic relay used in control systems of coal mines. The relay uses DUTs-26 crystal diodes and P3A or P3V transistors. There are no references.

B.N. Matveyev, A.I. Pivovarov, Engineers. Experience in the Development of Photoelectric Relays Using Semiconductors
The authors describe the construction and operation of FRS-10 and FRS-11 photoelectric relays using junction-type triode transistors and discuss relay characteristics and constructional features. The relays were developed at the laboratory of Uralmetallurgavtomatika. There are no references. 243

APPROVED FOR RELEASE: Tuesday, August 01, 2000 CIA-RDP86-00513R0013411

"APPROVED FOR RELEASE: Tuesday, August 01, 2000 CIA-RDP86-00513R001341

BRYLEYEV, A.M., laureat Stalinskoy premii, inzhener, GAMBURG, Ye.Yu., inzhener, retsenzent; GOLOVKIN, M.K., inzhener, retsenzent; KAZAKOV, A.A., kandidat tekhnicheskikh nauk, retsenzent; KUT'IN, I.M., dotsent, kandidat tekhnicheskikh nauk, retsenzent; LEONOV, A.A., inzhener, retsenzent; SEMENOV, N.M., laureat Stalinskoy premii, inzhener, retsenzent; NYZHEV, V.B., inzhener, retsenzent; VALUYEV, G.A., inzhener, retsenzent; CHERMETTAS, N.A. laureat Stalinskoy premii, inzhener, retsenzent; NOVIKOV, V.A., dotsent, retsenzent; PIVOVAROV, A.L., inzhener, retsenzent; POGODIN, A.M., inzhener, retsenzent; KHOLOMOV, L.R., inzhener, retsenzent; PIVOVAROV, A.L., inzhener, retsenzent; [redacted], L.R., inzhener, retsenzent; POGODIN, A.M., inzhener, retsenzent; SHUPLOV, V.I., kandidat tekhnicheskikh nauk, retsenzent; KLYKOV, A.F., inzhener, retsenzent; YUDZON, D.M., tekhnicheskiy redaktor; VERINA, G.P., tekhnicheskiy redaktor.

[Technical handbook for railroad men] Tekhnicheskii spravochnik zheleznodorozhnika. Vol. 8. [Signaling, central control, block system, and communication] Signalizatsiia, tsentralizatsiia, blokirovka, sviaz'. Red. kollegiia A.F.Baranov [i dr.] Glav.red. E.F.Rudoi. Moskva, Gos. transp. zhel-dor. izd-vo, 1952. 975 p. (Card 2) (MLRA 8:2)
(Railroads--Signaling) (Railroads--Communication systems)

APPROVED FOR RELEASE: Tuesday, August 01, 2000 CIA-RDP86-00513R0013411

"APPROVED FOR RELEASE: Tuesday, August 01, 2000 CIA-RDP86-00513R001341

BARANOV, A.F., redaktor; BIZYUKIN, D.D., redaktor; VAKHNIN, M.I., otvetstvennyy redaktor toma, professor, doktor tekhnicheskikh nauk; VKUDNISOV, B.N., redaktor; IVLIYEV, I.V., redaktor; MOSHCHUK, I.D., redaktor; RUDOY, Ye.F., glavnyy redaktor; SOKOLINSKIY, Ya.I., redaktor; SOLOGUBOV, V.N., redaktor; SHILEVSKIY, V.A., redaktor, ALFEROV, A.A., inzhener; ANASHKIN, B.T., inzhener, AFANAS'YEV, Ye.V., laureat Stalinskoy premii, inzhener; BELENKO, K.M., dotsent; BORISOV, D.P., dotsent, kandidat tekhnicheskikh nauk; ZHIL'TSOV, P.N., inzhener, ZBAR, N.R., inzhener; IL'YENKOV, V.I., dotsent, kandidat tekhnicheskikh nauk; KAZAKOV, A.A., kandidat tekhnicheskikh nauk; KRAYZMER, L.P., kandidat tekhnicheskikh nauk, KOTLYARENKO, N.F., dotsent, kandidat tekhnicheskikh nauk; MAYSHEV, P.V., professor, kandidat tekhnicheskikh nauk; MARKOV, M.V., inzhener; NELEPETS, V.S., dotsent, kandidat tekhnicheskikh nauk; NOVIKOV, V.A., dotsent; OBLOV, N.A., inzhener; PETROV, I.I., kandidat tekhnicheskikh nauk, PIVKO, G.M., inzhener; PO-GODIN, A.M., inzhener; RAMLAU, P.N., dotsent, kandidat tekhnicheskikh nauk; ROGINSKIY, V.N., kandidat tekhnicheskikh nauk; RYAZANTSEV, B.S., laureat Stalinskoy premii, dotsent, kandidat tekhnicheskikh nauk; SHABSKIY, A.A., inzhener; FEL'DMAN, A.B., inzhener; SHASTIN, V.A., laureat Stalinskoy premii, inzhener; SHUR, B.I., inzhener; GONCHUKOV, V.I., inzhener, retsenzent; NOVIKOV, V.A., dotsent, retsenzent; AFANAS'YEV, Ye.V., laureat Stalinskoy premii, retsenzent;

[Technical handbook for railroad men] Tekhnicheskii spravochnik zheleznodorozhnika. Vol. 8. [Signaling, central control, block system, and communication] Signalizatsiia, tsentralizatsiia, blokirovka, sviaz'. Red. kollegiia A.F.Baranov [i dr.] Glav.red. E.F.Rudoi. Moskva, Gos. transp. shel-dor. izd-vo, 1952. 975 p.

(Continued on next card)

APPROVED FOR RELEASE: Tuesday, August 01, 2000 CIA-RDP86-00513R0013411

"APPROVED FOR RELEASE: Tuesday, August 01, 2000 CIA-RDP86-00513R001341

PIVOVAROV, A.M., dotsent, kandidat fiziko-matematicheskikh nauk.

Calculation of the shearing force in bending freely supported plates with single- and double-connected areas. Trudy MEI no.17:102-111 '55.

(MLRA 9:7)

1.Kafedra teoreticheskoy mekhaniki.

(Elastic plates and shells)

APPROVED FOR RELEASE: Tuesday, August 01, 2000 CIA-RDP86-00513R0013411

"APPROVED FOR RELEASE: Tuesday, August 01, 2000 CIA-RDP86-00513R001341

Mathematical Reviews
Vol. 14 No. 10
Nov. 1953
Mechanics

Pivovarov, A. M. Concentrations of shearing stresses in torsion of prismatic rods. Akad. Nauk SSSR. Prikl. Mat. Meh. 17, 253–259 (1953). (Russian)

The investigated prismatic rods are subject to pure torsion and their cross-sections are indented by reëntrant angles with sharp vertices. The choice of the torsion function depends on the point where the stress is to be determined. If the contour of the cross-section has no angles with sharp vertices, or if the point is distant from those vertices, the author refers to a previous (unavailable) paper [Akad. Nauk SSSR. Inženernyĭ Sbornik 15 (1953)] and to M. G. Slobodyanskiĭ [Akad. Nauk SSSR. Prikl. Mat. Meh. 15, 245–250 (1951); these Rev. 13, 288] where the convenient functions are listed.

In this work the author uses the method of finite differences to construct a stress function, which would determine the stresses in the neighbourhood of sharp vertices, where the concentration of stresses is unusually great. Assuming that the cross-section is symmmetrical and the axis of symmetry is through the vertex of an angle, the author derives general expressions for the stresses near the vertex. He illustrates his theory on three examples with the following cross-sections: (a) a square with a cut, where the angle is 0°, (b) an angular bar (the cross-section composed of two rectangles at a right angle); (c) a sector of a circle. The stresses near the vertex are tabulated and graphed.

T. Leser (Lexington, Ky.)

APPROVED FOR RELEASE: Tuesday, August 01, 2000 CIA-RDP86-00513R0013411

"APPROVED FOR RELEASE: Tuesday, August 01, 2000 CIA-RDP86-00513R001341

PIVOVAROV, A.M. (Moscow)

Determination of tangential stresses in torsion of prismatic bars and of the bending moment of freely resting plates. Insh.sbor. 15:61-72 '53. (MLRA 7:1)

(Strains and stresses)

APPROVED FOR RELEASE: Tuesday, August 01, 2000 CIA-RDP86-00513R0013411

"APPROVED FOR RELEASE: Tuesday, August 01, 2000 CIA-RDP86-00513R001341

PIVOVAROV, A. M.

Elasticity and Plasticity, Plane and Spatial Problems of the Theory of Elasticity. (1698)
Inzhenernyy Sbornik, Vol 15, 1953, pp 61-72

Pivovarov, A. M.
"Calculation of Tangential Stresses in the Twisting of Prismatic Rods and Shearing Forces in the Bending of Freely Supported Plates."
M. G. Slobodyanskiy's proposed method (Prikladnaya Matematika i Mekhanika, Vol 15, No 2, 1951, pp 245-250) of calculating derivatives of unknown functions in the solution of problems by means of finite differences is used for the calculation of tangential stresses in the twisting of prismatic rods and shearing forces in the bending of freely supported plates.

SO: Referativnyy Zhurnal—Mekhanika, No 1, Jan 1954; SO: (W-30785, 28 July 1954)

APPROVED FOR RELEASE: Tuesday, August 01, 2000 CIA-RDP86-00513R0013411

"APPROVED FOR RELEASE: Tuesday, August 01, 2000 CIA-RDP86-00513R001341

~~Pivovarov, A. M.~~
Pivovarov, A. M.

4

373. Pivovarov, A. M. Determination of tangential stresses in torsion of prismatic shafts and of shearing forces in bending of simply supported plates (in Russian), *Inzhenerny Sbornik, Akad. Nauk SSSR* 15, 61-72, 1953.

A numerical method, developed by M. G. Slobodyanskii, 1951, has been employed to determine (1) tangential stresses in torsion of shafts whose cross-sectional areas consist of rectangles, triangles, trapezoids or a combination of these figures; (2) shearing stresses in bending of a simply supported rectangular plate.

The method is very effective and, with comparatively small amount of effort, the obtained results agree well with the values derived from the known exact solutions.

R. M. Evan-Iwanowski, USA

APPROVED FOR RELEASE: Tuesday, August 01, 2000 CIA-RDP86-00513R0013411

"APPROVED FOR RELEASE: Tuesday, August 01, 2000 CIA-RDP86-00513R001341

1. [illegible]

2. [illegible] (600)

4. [illegible] and [illegible]

7. [illegible]

9. **Monthly List of Russian Accessions**, Library of Congress, June 1953. Unclassified.

APPROVED FOR RELEASE: Tuesday, August 01, 2000 CIA-RDP86-00513R0013411

"APPROVED FOR RELEASE: Tuesday, August 01, 2000 CIA-RDP86-00513R001341

PIVOVAROV, A.M.

USSR/Mathematics - Strains

Mar/Apr 53

"Concentration of Tangential Stresses During Twisting of Prismatic Rods,"

A. M. Pivovarov, Moscow

Prik Mat i Mekh

Vol 17, No 2, pp 253-259

Determines [illegible] concentration in the case where the cross-sectional profile of the rods contains incoming angles (i.e. cross sections in the shape of cross, elbow, indented rectangle, etc.). Constructs graphs describing the tangential stresses near these angles equal to 0 and 90°. Cites his related work, "Determination of Tangential Stresses During Twisting of Prismatic Rods and of the Cross-cutting Force During Bending of a Freely Resting Plate," Inzhenerny Sbornik, Vol 15, 1953.

APPROVED FOR RELEASE: Tuesday, August 01, 2000 CIA-RDP86-00513R0013411

"APPROVED FOR RELEASE: Tuesday, August 01, 2000 CIA-RDP86-00513R001341

APPROVED FOR RELEASE: Tuesday, August 01, 2000 CIA-RDP86-00513R0013411

"APPROVED FOR RELEASE: Tuesday, August 01, 2000 CIA-RDP86-00513R001341

Piyavarov, A.M.

Distr: 4P1

1561. Piyavarov, A. M. The determination of the shearing force in the bending of freely supported plates with singly and doubly linked regions (in Russian), *Trudi Mosk. energ. in-ta* 17, 102-111, 1955. *Ref. Zh. Mekh.* no. 11, 1956, Rev. 7715.

The investigation is based on the results of M. G. Slobodyanzky [*Prikl. Mat. Mekh.* 15, no. 2, 1951], and in its first part, dealing with singly linked plates, is identical with the author's preceding paper [*Ref. Zh. Mekh.* 1954, Rev. 1698]. The transverse force on the periphery is determined by the equation

$$Q = \frac{\partial M}{\partial \nu} = \frac{1}{\pi}\iint_C \frac{\cos\theta_1}{r_0}\, p(\xi, \eta)\, d\xi\, d\eta - \frac{1}{n+1}\iint_C \psi(\xi, \eta) p(\xi, \eta)\, d\xi\, d\eta$$

Simultaneously, $\nabla^2 \psi = 0$, and on the periphery

$$\psi(\xi, \eta) = \frac{\cos\theta_0}{r_0} + \frac{\cos\theta_1}{r_1} + \ldots + \frac{\cos\theta_n}{r_n}$$

and $n + 1$ = number of points equidistant from the corresponding angles of the periphery, $\theta_0, \theta_1, \ldots$ = angles formed by the radii drawn from any point in the region C to the aforesaid points, with the internal normals to the periphery in these points.

1/2

APPROVED FOR RELEASE: Tuesday, August 01, 2000 CIA-RDP86-00513R0013411

"APPROVED FOR RELEASE: Tuesday, August 01, 2000 CIA-RDP86-00513R001341

S/044/62/000/004/065/099
[illegible]/0333

AUTHOR: Pivovarov, A.M.

TITLE: The determination of the bending moments for the bending of a plate which is fixed along the boundary

PERIODICAL: Referativnyy zhurnal, Matematika, no. 4, 1962, 61, abstract 4B262. ("Tr. Mosk. energ. in-ta", 1959, no. 32, 122-130)

TEXT: By introduction of special principal parts of the Green function the considered problem is reduced to the calculation of integrals which contain functions satisfying the boundary value problem for the biharmonic equation. The given functions are determined by a difference method, where a net with a rough step width is used. The author considers numerical examples for a semicircular and a triangular equilateral plate which is subject to a uniformly distributed stress.

Abstracter's note : Complete translation.

Card 1/1

APPROVED FOR RELEASE: Tuesday, August 01, 2000 CIA-RDP86-00513R0013411

"APPROVED FOR RELEASE: Tuesday, August 01, 2000 CIA-RDP86-00513R001341

APPROVED FOR RELEASE: Tuesday, August 01, 2000 CIA-RDP86-00513R0013411

"APPROVED FOR RELEASE: Tuesday, August 01, 2000 CIA-RDP86-00513R001341

PIVOVAROV, A.N. (Moskva)

Representation of real numbers by a system of ring counters with pairwise mutually prime numbers of digits. Izv. AN SSSR. Tekh. kib. no.4:101-106 Jl-Ag '65. (MIRA 18:11)

APPROVED FOR RELEASE: Tuesday, August 01, 2000 CIA-RDP86-00513R0013411

"APPROVED FOR RELEASE: Tuesday, August 01, 2000 CIA-RDP86-00513R001341

[illegible]YTMAN, M.Ya.; TURKOV, A.S.; S[illegible], N.T.; [illegible], A.S.

Some problems of fire prevention in the enterprises [illegible] industries. Pozh. bezop. no.[illegible]:14-23 [illegible].

APPROVED FOR RELEASE: Tuesday, August 01, 2000 CIA-RDP86-00513R0013411

"APPROVED FOR RELEASE: Tuesday, August 01, 2000 CIA-RDP86-00513R001341

54

L 19313-63 BDS ASD/AFFTC Pi-4
ACCESSION NR: AR3005872 S/0271/63/000/007/B044/B044

SOURCE: RZh. Avtomatika, telemekhanika i vy*chislitel'naya tekhnika, Abs. 7 B227

AUTHOR: Pivovarov, A. S.

TITLE: A pulse generator with fixed frequencies

CITED SOURCE: Avtomatika i priborostr. Nauchno-tekhn. sb., no. 3, 1962, 53-55

TOPIC TAGS: pulse generator, fixed frequency, computer component

TRANSLATION: This fixed frequency pulse generator can be used for adjusting elements and units of electronic digital computers and also as a generator of timing pulses in different computing machines. The generator has the following characteristics: the amplitude of pulses of voltage with negative polarity is 9 v; the range of fixed frequencies for tracking pulses 0.5 to 5.0 mc; the pulse duration at all frequencies 80 nanoseconds; the temperature range 0 to 40°C. The generator consists of the following units which are listed. The master generator has a circuit with delayed positive feedback. A self-oscillating mode with a period determined essentially by a delay line is set up in the generator; changes in the delay time make it possible to regulate the frequency of the generator. An emitter

Card 1/2

APPROVED FOR RELEASE: Tuesday, August 01, 2000 CIA-RDP86-00513R0013411

"APPROVED FOR RELEASE: Tuesday, August 01, 2000 CIA-RDP86-00513R001341

L 19313-
ACCESSION NR: AR3005872

follower which serves as a buffer stage for matching the high output impedance of the master generator with the low input impedance of the shaping stage. 3. The shaping stage is intended to shape pulses of the same given duration at all frequencies. It is a series oscillating circuit which satisfies the condition $\tau_{u,in} > \tau_{u,out}$, therefore its parameters are worked out so that $T < \tau_{u,in}$. Then the input signal should be regarded as a voltage drop and there will be aperiodic oscillations in the circuit when $R > 2\rho = 2\sqrt{L/c}$; at the same time we obtain a shaped pulse with maximum amplitude and "noise" is minimal in the period between principal pulses. The shaped pulse arrives at the amplifier input in accordance with voltage from the transformer output. The transformer is made of a ferrite ring Φ = 600, the diameter is 3 mm, ω_1 = 5 turns, and ω_2 = 8 turns. The output stage is a power amplifier according to the diagram of the emitter follower. In practice the generator operated on frequencies of 500 and 750 kc and on 1, .2, 4, and 5 microseconds type delay lines for 2, 1.4, 1, 0.5, 0.25, and 0.2 microseconds were used. The collector power supply for the final stage of 20 v maximum, the permissible load was 20 ohms. There were two illustrations, and also two references. [illegible]

DATE ACQ: 15Au-63 SUB CODE: GE, CP ENCL: 00

Card 2/2

APPROVED FOR RELEASE: Tuesday, August 01, 2000 CIA-RDP86-00513R0013411

"APPROVED FOR RELEASE: Tuesday, August 01, 2000 CIA-RDP86-00513R001341

RIVOVAROV, A.T., M.N. [illegible] Ye. [illegible] MANO[illegible]

Determining [illegible] temperature [illegible]
Khim. i tekh. [illegible] mase [illegible]

[illegible]

1. Groznenskiy filial Nauchno-issledovatel'skogo i [illegible] instituta po kompleksnoy avtomatizatsii proizvodstvennoy protsessov v neftyanoy i khimicheskoy promyshlennosti

APPROVED FOR RELEASE: Tuesday, August 01, 2000 CIA-RDP86-00513R0013411

"APPROVED FOR RELEASE: Tuesday, August 01, 2000 CIA-RDP86-00513R001341

PIVOVAROV, A.S.

Fixed-frequency pulse generator. Avtom.i prib. no.3:53-55 Jl-S '62. (MIRA 16:2)

1. Vychislitel'nyy tsentr AN UkrSSR.
(Oscillators, Electron-tube)

APPROVED FOR RELEASE: Tuesday, August 01, 2000 CIA-RDP86-00513R0013411

"APPROVED FOR RELEASE: Tuesday, August 01, 2000 CIA-RDP86-00513R001341

L 41643-65 EWP(j)/EWT(m) Pc-4 RM

ACCESSION NR: AP5006661 S/0065/65/000/003/0050/0052

21
20
B

AUTHOR: Kozlov, M. V.; Pivovarov, A. T.; Kalinov, B. P.

TITLE: Automatic control of product viscosity

SOURCE: Khimiya i tekhnologiya topliv i masel, no. 3, 1965, 50-52

TOPIC TAGS: viscosity, viscosimeter, automatic control, mathematical model

ABSTRACT: The Grozny affiliate of NIPI, "Neftekhimavtomat," has used the Grozny Petroleum Institute viscosimeter to develop a sampling system for the automatic control of the production concentrate entering the viscosimeter. A reliable continuous index of the viscosity of the concentrate obtained has thus been achieved. Relationships between the viscosity and the parameters of the main process were determined. From these data a model of the process was compiled on the EMU-10 electronic analog computer and several modifications of the control system were alternately investigated. After confirming the reliability and quality of these alternatives, the best variation was selected and the optimal adjustments for it were simultaneously determined. From this variation the apparatus of the MAUS system was selected and later was installed in a plant where it underwent industrial trials. The system chosen for automatic control of the viscosity consists

Card 1/2

APPROVED FOR RELEASE: Tuesday, August 01, 2000 CIA-RDP86-00513R0013411

"APPROVED FOR RELEASE: Tuesday, August 01, 2000 CIA-RDP86-00513R001341

L 41643-65

ACCESSION NR: AP5006661

of two circuits: one for the control of the thermal power of the furnace and the other for control of the viscosity. A comparison of the cartograms used to record the viscosity before and after automation indicates that this system makes it possible to hold the viscosity within GOST limits; deviation from the desired value did not exceed 5 Saybolt seconds. Orig. art. has: 3 figures.

ASSOCIATION: Groznenskiy filial NIPI "Neftekhimavtomat" (Grozny Affiliate of NIPI "Neftekhimavtomat"

SUBMITTED: 00 ENCL: 00 SUB CODE: IE, ME

NO REF SOV: 003 OTHER: 000

Card 2/2

APPROVED FOR RELEASE: Tuesday, August 01, 2000 CIA-RDP86-00513R0013411

"APPROVED FOR RELEASE: Tuesday, August 01, 2000 CIA-RDP86-00513R001341

KOZLOV, M.V.; PIVOVAROV, A.T.; MIN'KOVSKIY, Ya.I.; OPRISHKO, A.A.

Automatic control of the circulation of a lead catalyst.
Khim. i tekh. topl. i masel. 4 no.4:45-48 Ap '59.
(MIRA 12:8)

1. Groznenskiy filial Nauchno-issledovatel'skogo i proyektnogo instituta po kompleksnoy avtomatizatsii proizvodstvennykh protsessov v neftyanoy i khimicheskoy promyshlennosti.

APPROVED FOR RELEASE: Tuesday, August 01, 2000 CIA-RDP86-00513R0013411

"APPROVED FOR RELEASE: Tuesday, August 01, 2000 CIA-RDP86-00513R001341

KOZLOV, M.V.; PIVOVAROV, A.T.; KALINOV, B.P.

Automatic control of the viscosity of products. [illegible]
topl. i masel 10 no.3.50-52 Mr '65. [illegible]

1. Groznenskiy filial Nauchno-issledovatel'skogo [illegible] instituta po kompleksnoy avtomatizatsii proizvodstvennykh protsessov v neftyanoy i khimicheskoy promyshlennosti.

APPROVED FOR RELEASE: Tuesday, August 01, 2000 CIA-RDP86-00513R0013411

"APPROVED FOR RELEASE: Tuesday, August 01, 2000 CIA-RDP86-00513R001341

LIV VAROV, A.V.

Method of external standard in X-ray spectral analysis based on the secondary spectra with the absorption characteristics of samples taken into account. Zav. lab. 31 no.9:1081-1084 '65. (MIRA 18:1[illegible]).

1. Kazakhskiy nauchno-issledovatel'skiy institut mineral'nogo syr'ya.

APPROVED FOR RELEASE: Tuesday, August 01, 2000 CIA-RDP86-00513R0013411

"APPROVED FOR RELEASE: Tuesday, August 01, 2000 CIA-RDP86-00513R001341

STESHENKO, V.V.; PIVOVAROV, A.V.; RUHANOV, I.A.

Single-crystal focusing short-wave X-ray quantimeter. Prib. i tekh. eksp. 8 no.4:189-190 Jl-Ag '63. (MIRA 1[illegible])

1. Nauchno-issledovatel'skiy institut mineral'nogo syr'ya Ministerstva geologii i okhrany nedr KazSSR.

APPROVED FOR RELEASE: Tuesday, August 01, 2000 CIA-RDP86-00513R0013411

"APPROVED FOR RELEASE: Tuesday, August 01, 2000 CIA-RDP86-00513R001341

[illegible], A.V., [illegible]

[illegible]

APPROVED FOR RELEASE: Tuesday, August 01, 2000 CIA-RDP86-00513R0013411

"APPROVED FOR RELEASE: Tuesday, August 01, 2000 CIA-RDP86-00513R001341

ACCESSION NR: AP4038783 S/0048/64/028/005/0880/0881

AUTHOR: Pivovarov, A.V.

TITLE: Approximate calculation of the integral defining the intensity of x-ray fluorescence in irradiation by a continuous spectrum /Report, Seventh Conference on X-Ray Spectroscopy held in Yerevan 23 Sep to 1 Oct 1963/

SOURCE: AN SSSR. Izvestiya. Seriya fizicheskaya, v.28, no.5, 1964, 880-881

TOPIC TAGS: x-ray excitation, fluorescence integral

ABSTRACT: Simplified methods are discussed for evaluating the integral

$$P_{2i} = \int_{\lambda_0}^{\lambda_q} \frac{\lambda_i(\lambda_i - \lambda_0)}{\lambda_i^3 + \varkappa} d\lambda_i$$

for the intensity of x-ray fluorescence (M.A.Blokhin, Fizika rentgenovskikh luchey, Gostekhizdat.M.1957). The number of independent variables is reduced from 3 to 2 by the substitutions $m = \lambda_q/\lambda_0$, $q^* = \varkappa^{1/3}/\lambda_0$. Numerical computations were performed, and curves of q^* between 0.1 and 10.0, and showing P_{2i} as a function of q^* ($0 < q^* < 5$) for the values 1.5, 2 and 3 of m. Curves are also given showing as functions of

Card 1/2

APPROVED FOR RELEASE: Tuesday, August 01, 2000 CIA-RDP86-00513R0013411

"APPROVED FOR RELEASE: Tuesday, August 01, 2000 CIA-RDP86-00513R001341

ACCESSION NR: AP4038783

q* (0 < q* < 5) the coefficients in the three term Lagrange interpolation formula, based on the values 0, 1, 1.5, 2 and 3 for m, for P_{2i} as a function of m. The application of the curves and the calculation of the parameter ϰ when several fluorescent materials are present is discussed very briefly. Orig.art.has: 5 formulas and 2 figures.

ASSOCIATION: Kazakhskiy institut mineral'nogo syr'ya (Kazakh Institute of Mineral Raw Materials)

SUBMITTED: 00 DATE ACQ: 12Jun64 ENCL: 00

SUB CODE: OP NR REF SOV: 002 OTHER: 000

Card 2/2

APPROVED FOR RELEASE: Tuesday, August 01, 2000 CIA-RDP86-00513R0013411

"APPROVED FOR RELEASE: Tuesday, August 01, 2000 CIA-RDP86-00513R001341

PIVOVAROV, A.V.

Relative intensity of the ℓ- series line of the X-ray spectrum of rare-earth elements. Zav. lab. 29 no.9:1082 '63. (MIRA 17:1)

1. Kazakhskiy institut mineral'nogo syr'ya.

APPROVED FOR RELEASE: Tuesday, August 01, 2000 CIA-RDP86-00513R0013411

"APPROVED FOR RELEASE: Tuesday, August 01, 2000 CIA-RDP86-00513R001341

L 15531-63 EWP(q)/EWT(m)/BDS AFFTC/ASD/APGC WH

ACCESSION NR: AP3004917 S/0120/63/000/004/0189/0190

62

61

AUTHOR: Steshenko, V. V.; Pivovarov, A. V.; Rubanov, I. A.

TITLE: One-crystal short-wave focusing x-ray quantometer

SOURCE: Pribory i tekhnika eksperimenta, no. 4, 1963, 189-190

TOPIC TAGS: quantometer, spectrometer, x-ray-spectral analysis

ABSTRACT: A ten-channel spectrometer is described whose distinguishing feature is that it uses one crystal for all working channels. The quantometer includes a 5BKhV-1 x-ray tube, a curved quartz analyzing crystal, a container with MSTR-4 counters, and a PS-10000 scaler. An eleventh, monitor, channel is of goniometer type and can be tuned to any of the working elements. The quantometer is tuned to the following elements: 32 Ge, 37 Rb, 39 Y, 40 Zr, 41 Nb, 42 Mo, 82 Pb, 73 Ta, 90 Th, 92 U; stronger analytical lines are tabulated. A functional diagram and a collimator arrangement are presented. Orig. art. has:

Card 1/2

APPROVED FOR RELEASE: Tuesday, August 01, 2000 CIA-RDP86-00513R0013411

"APPROVED FOR RELEASE: Tuesday, August 01, 2000 CIA-RDP86-00513R001341

L 15531-63

ACCESSION NR: AP3004917

2 figures.

ASSOCIATION: NII mineral'nogo syr'ya Ministerstva geologii i okhrany* nedr KazSSR (Scientific-Research Institute of Crude Minerals, Ministry of Geology and Conservation of Mineral Resources, KazSSR)

SUBMITTED: 29Sep62 DATE ACQ: 28Aug63 ENCL: 00

SUB CODE: PH NO REF SOV: 001 OTHER: 004

Card 2/2

APPROVED FOR RELEASE: Tuesday, August 01, 2000 CIA-RDP86-00513R0013411

"APPROVED FOR RELEASE: Tuesday, August 01, 2000 CIA-RDP86-00513R001341

PIVOVAROV, A.V., inzh.

Signaling and telemetering of voltage and current limits at traction substations. Trudy TSNII MPS no.232:21-35 '62. (MIRA 15:9)

(Electric railroads--Current supply)

APPROVED FOR RELEASE: Tuesday, August 01, 2000 CIA-RDP86-00513R0013411

"APPROVED FOR RELEASE: Tuesday, August 01, 2000 CIA-RDP86-00513R001341

PIVOVAROV, A.V.; LOSKUTOV, N.P.

Use of the "single line" method in plotting the characteristic curves of photographic emulsions. Zav.lab. 26 no.12:1379 '60. (MIRA 13:12)

1. Kazakhskiy institut mineral'nogo syr'ya.
(Photographic emulsions)

APPROVED FOR RELEASE: Tuesday, August 01, 2000 CIA-RDP86-00513R0013411

"APPROVED FOR RELEASE: Tuesday, August 01, 2000 CIA-RDP86-00513R001341

PIVOVAROV, Al'bert Yakovlevich; BO[illegible], Rud[illegible]f [illegible]ovich;
PA[illegible], E.A., nauchn. red.

[Design of auxiliary material handling equipment for woodworking industries] Konstruktsii okolostanochnogo oborudovaniia dlia derevoobrabatyvaiushchikh proizvodstv. Moskva, TSentr. nauchno-issl. in-t patent[illegible] [illegible] tekhniko-ekon. issledovanii, [illegible] [illegible]

APPROVED FOR RELEASE: Tuesday, August 01, 2000 CIA-RDP86-00513R0013411

"APPROVED FOR RELEASE: Tuesday, August 01, 2000 CIA-RDP86-00513R001341

PIVOVAROV, A.Ya.

Using the BVK-24 switch as a pickup of the number of revolutions. Stan. i instr. 36 no.[illegible] Je '65. (MIRA 18:8)

APPROVED FOR RELEASE: Tuesday, August 01, 2000 CIA-RDP86-00513R0013411

"APPROVED FOR RELEASE: Tuesday, August 01, 2000 CIA-RDP86-00513R001341

DRANOVSKIY, M.G.; GORODETSKIY, Yu.G.; PIVOVAROV, A.Ya.

Automatic durable feeder for pile sorting. Der.prom. [illegible] F '62. (MIRA 15:1)

(Lumber--Drying) (Woodworking machinery)

APPROVED FOR RELEASE: Tuesday, August 01, 2000 CIA-RDP86-00513R0013411

"APPROVED FOR RELEASE: Tuesday, August 01, 2000 CIA-RDP86-00513R001341

PIVOVAROV, B.I., inzh.

Constructing the breakwater of the outer harbor of the Kremenchug Hydroelectric Power Station. Gidr.stroi. 30 no.8:42-43 Ag '60. (MIRA 13:8)

(Breakwaters)
(Kremenchug Hydroelectric Power Station)

APPROVED FOR RELEASE: Tuesday, August 01, 2000 CIA-RDP86-00513R0013411

"APPROVED FOR RELEASE: Tuesday, August 01, 2000 CIA-RDP86-00513R001341

ACC NR: AT7000191 SOURCE CODE: UR/0000/64/000/000/0196/0204

AUTHOR: Volodarskiy, R. F.; Pivovarov, B. L.

ORG: none

TITLE: Some questions of the deep structure of the earth's crust in Ciscaucasia

SOURCE: Moscow. Universitet. Kafedra geofizicheskikh metodov issledovaniya zemnoy kory. Geofizicheskiye issledovaniya (Geophysical research), no. 1. Moscow. Izd-vo Mosk. univ., 1964, 196-204

TOPIC TAGS: tectonics, earth crust, Mohorovicic discontinuity, earth structure, Conrad discontinuity/Ciscaucasus

ABSTRACT: An attempt is made on the basis of analysis of geophysical, chiefly gravity, data to map the deep tectonic structure of the central and eastern Ciscaucasus. The presence of two deep density interfaces, the Mohorovicic and the Conrad discontinuities, is assumed. To compute the depth of the Moho discontinuity, the author use the formula $H_m = 15.449 + 1.131 H_c - 0.056 \Delta g_r$, where H_c is the mean depth of the Conrad discontinuity, and Δg_r are values of the regional gravity field. Construction of the Moho interface was made in two ways: on the basis of the $\Delta g''$ field chart at a height of 30 km from a network of regional profiles and by using Tsuboi's method. The results obtained are almost identical. The following conclusions are made: 1) regions of increased crustal thickness are characterized by negative gravity

Card 1/2

APPROVED FOR RELEASE: Tuesday, August 01, 2000 CIA-RDP86-00513R0013411

"APPROVED FOR RELEASE: Tuesday, August 01, 2000 CIA-RDP86-00513R001341

ACC NR: AT7000191

anomalies; 2) the basic structural elements of Ciscaucasus have a "Caucasus" strike; and 3) all basic structural elements of Ciscaucasus are reflected in the deep structure of the earth's crust. Orig. art. has: 2 formulas and 1 figure.

SUB CODE: 08/ SUBM DATE: 05Nov64/ ORIG REF: 008/ OTH REF: 001/

Card 2/2

APPROVED FOR RELEASE: Tuesday, August 01, 2000 CIA-RDP86-00513R0013411

"APPROVED FOR RELEASE: Tuesday, August 01, 2000 CIA-RDP86-00513R001341

PANTELEYEV, Yu. and PIVOVAROV, E.

"Navigation and Maneuvers of the Merchant Marine in Time of War," Naval Fleet, State Transportation Publishing House, 1933.

APPROVED FOR RELEASE: Tuesday, August 01, 2000 CIA-RDP86-00513R0013411

"APPROVED FOR RELEASE: Tuesday, August 01, 2000 CIA-RDP86-00513R001341

A E. S

New production method for pressing glass. K. I. BONDAREV AND F. A. PIVOVAROV. *Stekol'naya i Keram. Prom.*, 1964, No. 6, pp. 5-7. In mold pressing glass the production was increased, the quality of the product improved, and the waste considerably decreased by using the mold to take the gather and then finishing the pressing. Data are quoted to show the extensive economies achieved thereby. M. H.

APPROVED FOR RELEASE: Tuesday, August 01, 2000 CIA-RDP86-00513R0013411

"APPROVED FOR RELEASE: Tuesday, August 01, 2000 CIA-RDP86-00513R001341

FIVOVAROV, Fedor Vasil'yevich, zasl. stroitel' USSR, Brigadir karenshchikov; CHEVIL', L.N., red.; SHEVCHENKO, M.G., tekhn. red.

[The integrated brigade in construction]Kompleksnaia brigada na stroitel'stve. Khar'kov, Khar'kovskoe knizhnoe izd-vo, 1962. 14 p. (MIRA 15:12)

(Kharkov—Construction industry)

APPROVED FOR RELEASE: Tuesday, August 01, 2000 CIA-RDP86-00513R0013411

"APPROVED FOR RELEASE: Tuesday, August 01, 2000 CIA-RDP86-00513R001341

APPROVED FOR RELEASE: Tuesday, August 01, 2000 CIA-RDP86-00513R0013411

"APPROVED FOR RELEASE: Tuesday, August 01, 2000 CIA-RDP86-00513R001341

ISAKORIN, B.N.; YAKUBOVICH, I.A.; ZUYEV, G.P.; KRASOV, V.G.; SMIRNOV, V.F.; PIVOVAROV, F.Ya.

Mix-and-settle apparatus for the extraction of uranium and rare metals from aqueous solutions. Atom. energ. 12 no.6:503-513 Je '62. (MIRA 15:6)

(Extraction apparatus)

APPROVED FOR RELEASE: Tuesday, August 01, 2000 CIA-RDP86-00513R0013411

"APPROVED FOR RELEASE: Tuesday, August 01, 2000 CIA-RDP86-00513R001341

[illegible] ...trevoza, Gorey Setsialisticheskogo Tr[illegible]; [illegible] ...tor; [illegible] ...ua-t[illegible]]; [illegible] [illegible]; TIKHMENEV, B. [illegible]

[illegible]

1. De[illegible] ...Kontinuty [illegible] ...Lis[illegible] ...Instrumental'nyy tse[illegible] ...lokomotivo[illegible] ...(for [illegible]). 6. Literat[illegible] ...zheleznodorozh[illegible]" (for [illegible]). 7. [illegible] ...Institut [illegible] transporta [illegible] ...Laboratorii [illegible] ...Vsesoyuznogo [illegible] ...instituta zheleznodorozhnogo transporta [illegible] ...soobshcheniya (for Tikhmenev). [illegible] ...Baltiyskiy (for Rivovarov).

(Astronautics)

APPROVED FOR RELEASE: Tuesday, August 01, 2000 CIA-RDP86-00513R0013411

"APPROVED FOR RELEASE: Tuesday, August 01, 2000 CIA-RDP86-00513R001341

1. MILKUM V, [illegible]: [illegible]

2. [illegible]

4. Tobacco

7. M. D. Barin v Collective Farm. Tabak 1[illegible] no. [illegible], 1952.

9. Monthly List of Russian Accessions, Library of Congress, March 195[illegible]. Unclassified.

APPROVED FOR RELEASE: Tuesday, August 01, 2000 CIA-RDP86-00513R0013411

"APPROVED FOR RELEASE: Tuesday, August 01, 2000 CIA-RDP86-00513R001341

PIVOVAROVA, G.N.

Some data on the change in nitrogen metabolism in children and adolescents with epilepsy. Vop. psikh. no. 3:303-309 '59. (MIRA 13:10)

(NITROGEN METABOLISM) (EPILEPSY)

APPROVED FOR RELEASE: Tuesday, August 01, 2000 CIA-RDP86-00513R0013411

"APPROVED FOR RELEASE: Tuesday, August 01, 2000 CIA-RDP86-00513R001341

PIVOVAROV, G.N. (Leningrad)

University of scientific knowledge for teachers. Mat.v shkole no.6:82 N-D '62. (MIRA 16:1)

(Leningrad—Teachers, Training of)
(Mathematics—Study and teaching)

APPROVED FOR RELEASE: Tuesday, August 01, 2000 CIA-RDP86-00513R0013411

"APPROVED FOR RELEASE: Tuesday, August 01, 2000 CIA-RDP86-00513R001341

PIVOVAROV, G.N. (Leningrad)

Forms for evaluating the knowledge of students in mathematics. Mat.v shkole no.6:14-17 N-D '57 (MIRA 10:11)
(Mathematics--Study and teaching)

APPROVED FOR RELEASE: Tuesday, August 01, 2000 CIA-RDP86-00513R0013411

"APPROVED FOR RELEASE: Tuesday, August 01, 2000 CIA-RDP86-00513R001341

APPROVED FOR RELEASE: Tuesday, August 01, 2000 CIA-RDP86-00513R0013411

"APPROVED FOR RELEASE: Tuesday, August 01, 2000 CIA-RDP86-00513R001341

AUTHORS: Pivovarov, G.Ya. [illegible], I.S. [illegible]

TITLE: An Impregnated Cathode for Hydrogen Thyratrons (Impreznirovannyy katod dlya vodorodnykh [illegible])

PERIODICAL: Radiotekhnika i Elektronika, 1958, vol. [illegible], pp. 10[illegible] - 10[illegible] (USSR)

ABSTRACT: It was suggested by [illegible] (Ref. [illegible]) [illegible] cathode made with a Ni [illegible] be successfully employed in hydrogen [illegible] it absorbed a [illegible] quantities of [illegible]. The experimental work [illegible] as carried [illegible] lines [illegible] Mechair. A [illegible] produced a cathode [illegible] of the [illegible] S [illegible] trons (type TGI1-35/3). The [illegible] 11 mm and a diameter [illegible] electrolytic nickel. The [illegible] had a grain size of 10-15 μ and was [illegible] nickel with small admixtures of Si, [illegible] The active [illegible] consisted of 50% [illegible] CO_3, 5% [illegible] and 5% $CaCO_3$ (by weight). The matrix [illegible] of 60-70 μ and was processed [illegible]

Card1/3

APPROVED FOR RELEASE: Tuesday, August 01, 2000 CIA-RDP86-00513R0013411

"APPROVED FOR RELEASE: Tuesday, August 01, 2000 CIA-RDP86-00513R001341

An Impregnated Cathode for Hydrogen Thyratrons SOV/10 -3-[illegible]-1[illegible]/1[illegible]

of 1 800 to 1 850 °C for 10 minutes. The active layer consisted of 70% Ni powder and 30% carbonates, and [illegible] a thickness of about 80-90 μ. The [illegible] is shown diagrammatically in Figure 1. The [illegible] characteristics of the cathode were investigated in a special vacuum diode which was furnished with a nickel anode. The results obtained are shown in Figure [illegible], Curve 1 corresponds to a pressed, impregnated cathode, Curve 2 is for a normal, impregnated cathode and Curve [illegible] relates to an oxide cathode. The life tests on the cathodes are shown in Figure 4, where Curve 1 corresponds to an impregnated cathode, while Curve 2 is for an oxide cathode. The reactivation phenomenon in an impregnated cathode is illustrated by Curves 1 and 2 in Figure 5; the first curve shows the current characteristic after initial activation, while the second curve represents the current characteristic for the same cathode after it was exposed to the action of the atmosphere for a duration of 15 days. The change of the hydrogen pressure in two different thyratrons as a function of the operating time is shown in Figure 6; from these, it is seen that the pressure change during 500 hours was of the order of

Card2/3

APPROVED FOR RELEASE: Tuesday, August 01, 2000 CIA-RDP86-00513R0013411