"APPROVED FOR RELEASE: 06/15/2000 CIA-RDP86-00513R001341820016-5

1. POLOSUKHIN, N. A.

2. USSR (600)

4. Oxyacetylene Welding and Cutting

7. Mechanical properties of gas pressure welds. Sbor. trud. Inst. stroi. mekh. AN URSR No. 16, 1952.

9. Monthly List of Russian Accessions, Library of Congress, April 1953, Uncl.

APPROVED FOR RELEASE: 06/15/2000 CIA-RDP86-00513R001341820016-5"

"APPROVED FOR RELEASE: 06/15/2000 CIA-RDP86-00513R001341820016-5

POLOSUKHIN, N.A., kand.tekhn.nauk dots.; BELENTSOVA, N.A., inzh.

Reinforcement of winding machine parts worn out by thread friction. Izv.vys.ucheb.zav.; tekh.leg.prom. no.5:156-159 '59. (MIRA 13:4)

1. Kiyevskiy tekhnologicheskiy institut legkoy promyshlennosti. Rekomendovana kafedroy tekhnologii metallov.
(Protective coating) (Textile machinery)

APPROVED FOR RELEASE: 06/15/2000 CIA-RDP86-00513R001341820016-5"

"APPROVED FOR RELEASE: 06/15/2000 CIA-RDP86-00513R001341820016-5

POLOSUKHIN, N.A., kand.tekhn.nauk, dotsent

Manufacture of the cutting tool for cutting shoe parts using the lost wax casting process. Izv.vys.ucheb.zav.; tekh.leg. prom. no.6:114-118 '59. (MIRA 13:5)

1. Kiyevskiy tekhnologicheskiy institut legkoy promyshlennosti. Rekomendovana kafedroy tekhnologii metallov.
(Shoe machinery) (Precision casting)

APPROVED FOR RELEASE: 06/15/2000 CIA-RDP86-00513R001341820016-5"

"APPROVED FOR RELEASE: 06/15/2000 CIA-RDP86-00513R001341820016-5

POLOSUKHIN, Porfiriy Porfir'evich, zasluzhennyy master sporta. Prinimal uchastiye: REVZIN, Sergey Vladimirovich, inzh.-vozdukhoplavatel'. SUMAROKOVA, T.N., red.; MANINA, M.P., tekhn.red.

[Notes of an amateur navigator and parachutist; as told to Sergei Revzin] Zapiski sportsmena-vozdukhoplavatelia i parashiutista. Literaturnaia zapis' Sergeia Revzina. Izd.3., dop. i perer. Moskva, Gos.izd-vo "Fizkul'tura i sport," 1958. 230 p. (MIRA 12:12)

(Polosukhin, Porfirii Porfir'evich, 1910-)

APPROVED FOR RELEASE: 06/15/2000 CIA-RDP86-00513R001341820016-5"

"APPROVED FOR RELEASE: 06/15/2000 CIA-RDP86-00513R001341820016-5

PARUKHIN, A.M.; MINOROV, V.A.; POLOSUKHIN, R.V.

Results of research on the biology of tapeworms in the Baikal region and role of fishes in their propagation. Trudy nov.Ikht. kom. no.9:214-216 '59. (MIRA 13:5)

1. Gor'kovskiy gosudarstvennyy universitet.
(Baikal region--Tapeworms)
(Fishes as carriers of disease)

APPROVED FOR RELEASE: 06/15/2000 CIA-RDP86-00513R001341820016-5"

"APPROVED FOR RELEASE: 06/15/2000 CIA-RDP86-00513R001341820016-5

POLOSUKHINA, I.YA.

USSR

The synthesis of cholesterol in the animal organism. I. Ya. Polosukhina. *Uspekhi Sovremennoi Biol.* 38, 143-62 (1954).—A review with 103 references. J. A. Stekol

APPROVED FOR RELEASE: 06/15/2000 CIA-RDP86-00513R001341820016-5"

"APPROVED FOR RELEASE: 06/15/2000 CIA-RDP86-00513R001341820016-5

BULEYEV, N.I. (Moskva); POLOSUKHINA, K.N. (Moskva); PYSHIN, V.K. (Moskva)

Hydraulic resistance and heat transfer of a turbulent liquid flow in a rod lattice. Teplofiz. vys. temp. 2 no.5:749-757 S-O '64. (MIRA 17:11)

APPROVED FOR RELEASE: 06/15/2000 CIA-RDP86-00513R001341820016-5"

"APPROVED FOR RELEASE: 06/15/2000 CIA-RDP86-00513R001341820016-5

L 10715-65 EWT(1)/EWP(m)/EPF(c)/EPF(n)-2/EPR/T/EPA(bb)-2/FCS(k)/EWA(1)
Pd-4/Pr-4/Ps-4/Pu-4 ESD(t)/AEDC(a)/SSD/AFWL/ASD(f)-2/AEDC(b)/ASD(d)/
ASD(p)-3/AFTC(a)/BSD WW

ACCESSION NR: AP4047380 S/0294/64/002/005/0749/0757

AUTHORS: Buleyev, N. I. (Moscow); Polosukhina, K. N. (Moscow); Py*shin, V. K. (Moscow)

TITLE: Hydraulic resistance and heat transfer in turbulent fluid flow in a grid of bars

SOURCE: Teplofizika vy*sokikh temperatur, v. 2, no. 5, 1964, 749-757

TOPIC TAGS: heat exchange, nuclear reactor, turbulent flow, fluid velocity vector, temperature gradient

ABSTRACT: The authors solved the basic equations of motion and energy of a fluid stream in a bar grid such as the grids used for heat distribution in certain nuclear reactor types. Use was made of simplified expressions for the coefficients of turbulent viscosity and temperature conduction developed previously by N. I. Buleyev (V sb. "Voprosy* teploobmena", Izd-vo AN SSSR, 1959). Consideration was made of grid bars arranged in both triangular and square fashion. The authors first derived a means of computing the flow velocity field by considering the flow in a single grid cell. Tabulated values of the velocity vector were given for selected parametric conditions describing grid geometry and liquid state. A relief-type diagram of the relative velocity field is shown for a typical parameter setting.

Card 1/2

APPROVED FOR RELEASE: 06/15/2000 CIA-RDP86-00513R001341820016-5"

"APPROVED FOR RELEASE: 06/15/2000 CIA-RDP86-00513R001341820016-5

L 10715-65

ACCESSION NR: AP4047380

Plots are presented showing the manner of variation of the resistance coefficient with Reynolds number for a variety of grid and flow arrangements. By considering the grids as heat sources, the authors derived expressions for computing the heat field for grids. Tabulations of temperature field values are presented for both grid arrangements; four parameters are varied in the tabulations. Variations of Nusselt's number with Reynolds number as well as variations of temperature profile along the bar perimeter were compared with experimental model results (Atomnaya energiya, 9, v. 6, 1960 and 13, v. 12, 1962) obtained by V. I. Subbotin, P. A. Ushakov, B. N. Gabrianovich, A. V. Zhukov, V. D. Talanov, and I. P. Sviridenko. Orig. art. has: 7 figures, 4 tables, and 28 equations.

ASSOCIATION: none

SUBMITTED: 10Jun63 ENCL: 00

SUB CODE: ME NO REF SOV: 006 OTHER: 001

Card 2/2

APPROVED FOR RELEASE: 06/15/2000 CIA-RDP86-00513R001341820016-5"

"APPROVED FOR RELEASE: 06/15/2000 CIA-RDP86-00513R001341820016-5

POLOSUKHINA, N.S.

Observations of the polarization of some magnetic variable stars.
Izv. Krym. astrofiz. obser. 31:118-125 '64. (MIRA 17:9)

APPROVED FOR RELEASE: 06/15/2000 CIA-RDP86-00513R001341820016-5"

"APPROVED FOR RELEASE: 06/15/2000 CIA-RDP86-00513R001341820016-5

NIKONOV, V.B.; NEKRASOVA, S.V.; POLOSUKHINA, N.S.; RACHKOVSKIY, D.N.; CHUVAYEV, K.K.

Color-luminosity diagram for stars in the vicinity of the sun. Izv.Krym.astrofiz.obser. 17:42-88 '57.
(MIRA 13:4)

(Stars)

APPROVED FOR RELEASE: 06/15/2000 CIA-RDP86-00513R001341820016-5"

"APPROVED FOR RELEASE: 06/15/2000 CIA-RDP86-00513R001341820016-5

POLOSUKHINA, N.S.

Polarimetric observations of the magnetic-variable star HD 215441.
Astron.zhur. 40 no.4:651-653 Jl-Ag '63. (MIRA 16:8)

1. Krymskaya astrofizicheskaya observatoriya AN SSSR.
(Polariscope) (Stars, Variable)

APPROVED FOR RELEASE: 06/15/2000 CIA-RDP86-00513R001341820016-5"

"APPROVED FOR RELEASE: 06/15/2000 CIA-RDP86-00513R001341820016-5

NEKRASOVA, S.V.; POLOSUKHINA, N.S.

Photoelectric observation of β Lyrae. Per.zvezdy 13 no.1:31-36 Ap '61.

1. Krymskaya astrofizicheskaya observatoriya AN SSSR.
(Stars, Variable)

APPROVED FOR RELEASE: 06/15/2000 CIA-RDP86-00513R001341820016-5"

"APPROVED FOR RELEASE: 06/15/2000 CIA-RDP86-00513R001341820016-5

S/035/62/000/010/016/128
A001/A101

3/5/0

AUTHORS: Nekrasova, S. V., Nikonov, V. B., Polosukhina, N. S., Rybka, Ye.

TITLE: Photoelectric magnitudes and colors of reference photometric stars in Kapteyn areas. I. Some problems in methods of compiling fundamental photometric catalogues

PERIODICAL: Referativnyy zhurnal, Astronomiya i Geodeziya, no. 10, 1962, 30, abstract 10A244 ("Izv. Krymsk. astrofiz. obzerv.", 1962, v. 27, 228 - 240)

TEXT: A catalogue of photoelectric magnitudes and colors of reference photometric stars in Kapteyn's areas is necessary to reduce zero-points of scales of stellar magnitudes to a single system, as well as in allowance for atmospheric extinction. The authors set forth the task of observation of all reference photometric stars in 139 Kapteyn's areas ($\delta > -15^{\circ}$). In the future, observations should be extended to the entire southern half of the sky. Two methods are briefly described (Ye. Rybka and V. B. Nikonov) for compiling such a catalogue. Both of the methods are applied to the same observational data obtained in Crimea by means of an AZT-7 (AZT-7) meniscus telescope. In more

Card 1/2

APPROVED FOR RELEASE: 06/15/2000 CIA-RDP86-00513R001341820016-5"

"APPROVED FOR RELEASE: 06/15/2000 CIA-RDP86-00513R001341820016-5

POLOSUKHINA, O. A.

Polosuhina, O. A. On the solution of finite-difference equations in several independent variables. Leningrad. Gos. Univ. Uč. Zap. 144. Ser. Mat. Nauk 23 (1952), 111–150. (Russian)

"In the present paper are considered several methods of solving linear equations with partial differences, i.e. linear difference equations with several independent variables, considered under the assumption that the independent variables vary continuously, rather than from the point of view of recurrence series, when the independent variable takes on only integral values. The methods given here are close to the methods of solution of ordinary difference equations." (From the author's summary.) *J. M. Danskin* (Princeton, N.J.).

1-FIW

Math

2

APPROVED FOR RELEASE: 06/15/2000 CIA-RDP86-00513R001341820016-5"

"APPROVED FOR RELEASE: 06/15/2000 CIA-RDP86-00513R001341820016-5

POLOSUKHINA, O.A.

Solution of finite difference equations with several independent variables. Uch.zap.Len.un.no.144:111-150 '52. (MLRA 9:6)
(Difference equations)

APPROVED FOR RELEASE: 06/15/2000 CIA-RDP86-00513R001341820016-5"

"APPROVED FOR RELEASE: 06/15/2000 CIA-RDP86-00513R001341820016-5

POLOSUKHINA, T.A.,
A. L. YUDELES, Arch. Sci. biol. 41, No. 1, 121-3 (1936)

APPROVED FOR RELEASE: 06/15/2000 CIA-RDP86-00513R001341820016-5"

"APPROVED FOR RELEASE: 06/15/2000 CIA-RDP86-00513R001341820016-5

VERBOLOVICH, Petr Alekseyevich; POLOSUKHINA, Tat'yana Yakovlevna; KAIPOVA, Zoya Nikolayevna; MAKEYEV, Aleksandr Fedorovich; GOLODOVA, Lidiya Semenovna; POGOZHEV, A.S., red.; ROROKINA, Z.P., tekhn. red.

[Laboratory work in organic, physical, colloid, and biological chemistry] Praktikum po organicheskoi, fizicheskoi, kolloidnoi i biologicheskoi khimii. Alma-Ata, Izd-vo Akad. nauk Kazakhskoi SSR, 1963. 345 p. (MIRA 16:6)
(CHEMISTRY, MEDICAL AND PHARMACEUTICAL--LABORATORY MANUALS)

APPROVED FOR RELEASE: 06/15/2000 CIA-RDP86-00513R001341820016-5"

"APPROVED FOR RELEASE: 06/15/2000 CIA-RDP86-00513R001341820016-5

POLOSUKHINA, T. Ya.

2487. Synthesis of cholesterol by the foetus. T. Ya. Polosukhina *Nauch. Izb. Kazakh. Med. Inst.*, 1956, 18, 117—12?; *Referat Zh. Biol.*, 1958, Abstr. No. 14874.—By studying the amount of free cholesterol in blood, taken from the elbow veins of adults (26 cases) and also in the blood of arteries and umbilical veins of 39 foetuses, it was shown that the foetus is capable (in the case taken in final stage pregnancy) of synthesising cholesterol. Serum cholesterol in girls is somewhat higher than in boys (4·6 mg.% in girls, 2·3 mg.% in boys). The average amount of cholesterol in blood flowing to and from the foetuses of the female is slightly higher than the corresponding amount in males. The average amount of cholesterol in boys in blood of umbilical veins is equal to 105·0 mg.%, in the blood of umbilical arteries 107·3 mg.% The average amount of cholesterol in girls in the blood of umbilical veins is 110·1 mg.% and in the blood of umbilical arteries 114·7 mg.%. (Russian) E. McKechnie

APPROVED FOR RELEASE: 06/15/2000 CIA-RDP86-00513R001341820016-5"

"APPROVED FOR RELEASE: 06/15/2000 CIA-RDP86-00513R001341820016-5

Z/011/62/019/011/001/003
E073/E535

AUTHORS: Polosukhina T. Y., Valitova M.S. et al.

TITLE: Influence of X-ray irradiation on the metabolism of lipides in the liver of a dog

PERIODICAL: Chemie a chemická technologie. Přehled technické a hospodářské literatury, v.19, no.11, 1962, 496 abstract Ch 62 6690 (Vopr. med. Khim. v.8, no.2,1962, 192-199)

TEXT: The serum of venous blood showed an increased concentration of neutral fats, phosphor lipides and cholesterol the third day after a single irradiation of the dog with an X-ray dose (500 roentgen). The increase in the concentration of ketones in the blood in the case of radiation sickness is caused by the formation of ketones in the liver. The content of glycogens in the liver tissue decreased, whilst the content of neutral fats and cholesterol increased.
3 tables, 46 references.

[Abstracter's note: Complete translation.]

Card 1/1

APPROVED FOR RELEASE: 06/15/2000 CIA-RDP86-00513R001341820016-5"

"APPROVED FOR RELEASE: 06/15/2000 CIA-RDP86-00513R001341820016-5

POLOSUKHINA, T.Ya.; KAIPOVA, Z.N.

Cholesterol, fatty acids, and ketone bodies of the blood in domestic and wild animals. Izv. AN Kazakh. SSR. Ser. med. i fiziol. no. 1:41-46 '60. (MIRA 13:10)
(CHOLESTEROL) (ACIDS, FATTY) (BLOOD—ANALYSIS AND CHEMISTRY)

APPROVED FOR RELEASE: 06/15/2000 CIA-RDP86-00513R001341820016-5"

"APPROVED FOR RELEASE: 06/15/2000 CIA-RDP86-00513R001341820016-5

POLOSUKHINA, T.Ya.; VALITOVA, M.S.; DYAKOVA, A.L.; KAIPOVA, Z.N.; KUROVSKAYA, N.I.; RESHETNIKOVA, M.I.; SULAYEVA, L.S.

Effect of X rays on lipid metabolism in the dog liver. Vop. med. khim. 8 no.2:192-199 Mr-Ap '62. (MIRA 15:4)

1. Chair of Biological Chemistry, Kazakh State Medical School, Alma-Ata.

(LIVER) (LIPID METABOLISM) (X RAYS--PHYSIOLOGICAL EFFECT)

APPROVED FOR RELEASE: 06/15/2000 CIA-RDP86-00513R001341820016-5"

"APPROVED FOR RELEASE: 06/15/2000 CIA-RDP86-00513R001341820016-5

POLOSUKHINA, T.YA., KAIPOVA, Z.N., VALITOVA, M.S., [illegible], A.L.,

KUROVSKAYA, N.I., PANINA, Z.A., RESHETNIKOVA, M.I., SULAYEVA, L.S.,

UTESHEV, A.B., VERBOLOVICH, P.A., (USSR)

"Special Aspects of the Metabolism of Some Substance in Radiation Desease in Dogs."

Report presented at the 5th Int'l. Biochemistry, Congress, Moscow, 10-16 Aug 1961.

APPROVED FOR RELEASE: 06/15/2000 CIA-RDP86-00513R001341820016-5"

"APPROVED FOR RELEASE: 06/15/2000 CIA-RDP86-00513R001341820016-5

POLOSUKHINA, T.Ya.; AL'ZHANOVA, T.M.

Determination of cholesterol combined with proteins. Zdrav. Kazakh. 21 no. 4:64-69 '61. (MIRA 14:4)

1. Iz kafedry biologicheskoy khimii (zav. - doktor meditsinskikh nauk P.A. Berbolovich) Kazakhskogo meditsinskogo instituta.
(CHOLESTEROL) (PROTEINS)

APPROVED FOR RELEASE: 06/15/2000 CIA-RDP86-00513R001341820016-5"

"APPROVED FOR RELEASE: 06/15/2000 CIA-RDP86-00513R001341820016-5

POLOSUKHINA, T.Ya.; BEKETAYEV, A.M., kandidat meditsinskikh nauk, redaktor; VOZHEYKO, I.V., redaktor; ROROKINA, Z.P., tekhnicheskiy redaktor.

[Papers on the physiology of cholesterin metabolism] Materialy po fiziologii kholesterinovogo obmena. Alma-Ata, Izd-vo Akademii nauk Kazakhskoi SSR, 1955. 146 p. (MLRA 9:1)
(Cholesterol)

APPROVED FOR RELEASE: 06/15/2000 CIA-RDP86-00513R001341820016-5"

"APPROVED FOR RELEASE: 06/15/2000 CIA-RDP86-00513R001341820016-5

POLOSUKHINA, T.Ya. (Alma-Ata)

Synthesis of cholesterol in the animal organism. Usp. sovr. biol. 38 no.2:143-162 S-O '54. (MLRA 8:1)

(CHOLESTEROL, metabolism, biosynthesis in animal organism)

APPROVED FOR RELEASE: 06/15/2000 CIA-RDP86-00513R001341820016-5"

"APPROVED FOR RELEASE: 06/15/2000 CIA-RDP86-00513R001341820016-5

POLOSUKHINA, T. YA.

The determination of fatty acids in blood serum and in plasma. T. Ya. Polosukhina and Z. N. Kaipova. *Nauch. Izvest. Kazakh. Med. Inst.* 1953, No. 11, 49–52; *Referat. Zhur. Khim., Biol. Khim.* 1955, No. 8160.—A modification is given of the Bloor-Pelkan-Allen method in which 0.1 ml. instead of 0.5 ml. of the sample is used. The method has the same degree of precision as the original. B. S. Levine

MD

①

APPROVED FOR RELEASE: 06/15/2000 CIA-RDP86-00513R001341820016-5"

"APPROVED FOR RELEASE: 06/15/2000 CIA-RDP86-00513R001341820016-5

POLOSUKHIN, V.

YERMOLAYEV, A.;KAL'NEV, F.;MIKHAYLOV, M.;NEUPOKOYEV, A.;OGURTSOV, S.;
POLOSUKHIN, V.;PUZAKOVA, V.;RYBAL'CHENKO, N.;SKURIKHIN, I.

Open letter to Comrade A. A. Ishkov, Minister of the Fishing Industry of the U.S.S.R. Sots trud no.3:121-122 Mr '57. (MLRA 10:4)

1. Inzhenery po tekhnormirovaniyu predpriyatiy Glav-komchatrybproma. (Fisheries)

APPROVED FOR RELEASE: 06/15/2000 CIA-RDP86-00513R001341820016-5"

"APPROVED FOR RELEASE: 06/15/2000 CIA-RDP86-00513R001341820016-5

POLOSUKHINA, V.G.

Reaction of ether oxides with nitrogenous compounds. VII. Reaction of isopropyl and butyl ethers of glycidol with diethylamine. F. G. Ponomarev and V. G. Polosukhina (Voronezh State Univ.). *Zhur. Obshchei Khim.* 23, [illegible] (1953); cf. *C.A.* 48, 8174g.—Iso-Pr glycidyl ether (17.5 g.) treated with 33 g. Et_2NH and 58 ml. H_2O, the mixt. kept on a water bath 3 hrs., the upper layer sepd., the aq. layer satd. with KOH, and the resulting oil combined with the material of the original upper layer, and distd. yielded 80% $Et_2NCH_2CH(OH)CH_2OPr\text{-}iso$, b_{18} 93–5°, d_{20} 0.9856, n_D^{20} 1.4348. A similar reaction at room temp. gave a 73% yield after 72 hrs. A lesser proportion of Et_2NH reduces the yield. The product cannot be distd. at atm. pressure and is hygroscopic. *Picrate* m. 163–4° (from abs. EtOH); *acetate* (by treatment with Ac_2O) b_2 88°, d_{20} 0.9363, n_D^{20} 1.4328. The structure of the product was confirmed by its synthesis in 72.6% yield from iso-$PrOCH_2CH(OH)CH_2Cl$ and a 3-fold excess of Et_2NH in a sealed tube after 4 hrs. at 100°. Similarly, 23 g. Bu glycidyl ether and 36.5 g. Et_2NH in 75 ml. H_2O heated on water bath 3 hrs. gave 74–7% $Et_2NCH_2CH(OH)CH_2OBu$, b_{18} 118–19°, d_{20} 0.8864, n_D^{20} 1.4340 (distillable at 180–5° but with much decompn.). A 64% yield resulted from a similar reaction at room temp. in 72 hrs. *Picrate* m. 166–7° (from abs. EtOH); *acetate* b_2 112–13°, d_{20} 0.9377, n_D^{20} 1.4344. The same amine ether, b_{18} 120–1°, was prepd. in 74.9% yield from Et_2NH and $BuOCH_2CH(OH)CH_2Cl$ after 6 hrs. in a sealed tube at 100°.

G. M. Kosolapoff

APPROVED FOR RELEASE: 06/15/2000 CIA-RDP86-00513R001341820016-5"

"APPROVED FOR RELEASE: 06/15/2000 CIA-RDP86-00513R001341820016-5

POLOSUYEV, A. M.: Master Phys-Math Sci (diss) -- "Multidimensional problems in the theory of diophantine approximations with exponential functions". Moscow, 1958. 7 pp (Moscow Order of Lenin and Order of Labor Red Banner State U im M. V. Lomonosov), 150 copies (KL, No 5, 1959, 143)

APPROVED FOR RELEASE: 06/15/2000 CIA-RDP86-00513R001341820016-5"

"APPROVED FOR RELEASE: 06/15/2000 CIA-RDP86-00513R001341820016-5

AUTHOR: Polosuyev, A.M. SOV/20-122-3-6/57

TITLE: On a Problem of Uniform Distribution of a System of Functions (Ob odnoy zadache ravnomernogo raspredeleniya sistemy funktsiy)

PERIODICAL: Doklady Akademii nauk SSSR, 1958, Vol 122, Nr 3, pp 346-348 (USSR)

ABSTRACT: The present paper is a generalization of the result of Korobov [Ref 1], whose method is adopted by the author. It is proved that the system of functions

$$\alpha_1 \lambda_1^x f_1(x), \ldots, \alpha_s \lambda_s^x f_s(x)$$

is uniformly distributed in the s-dimensional space. The $f_i(x)$ are integral polynomials, while the λ_i and α_i are rather complicatedly defined numbers which depend on each other. There is 1 Soviet reference.

ASSOCIATION: Moskovskiy energeticheskiy institut (Moscow Power Engineering Institute)

Card 1/2

APPROVED FOR RELEASE: 06/15/2000 CIA-RDP86-00513R001341820016-5"

"APPROVED FOR RELEASE: 06/15/2000 CIA-RDP86-00513R001341820016-5

AUTHOR: Polosuyev, A.M. (Moscow) SOV/20-123-3-5/54

TITLE: On the Uniform Distribution of a Function System Which is the Solution of a Linear System of Difference Equations of First Order (O ravnomernom raspredelenii sistemy funktsiy, yavlyayushcheysya resheniyem sistemy lineynykh konechnoraznostnykh uravneniy pervogo poryadka)

PERIODICAL: Doklady Akademii nauk SSSR, 1958, Vol 123, Nr 3, pp 405 - 406 (USSR)

ABSTRACT: Let the system of the functions

$$(1) \qquad \varphi_1(x), \ldots, \varphi_s(x)$$

be the solution of the system of s linear difference equations of first order with integer coefficients

$$(2) \qquad \begin{aligned} \phi_1(x+1) &= a_{11}\,\phi_1(x) + \ldots + a_{s1}\,\phi_s(x) \\ &\text{- - - - - - - - - - - - - - - - - - - -} \\ \phi_s(x+1) &= a_{1s}\,\phi_1(x) + \ldots + a_{ss}\,\phi_s(x) \end{aligned}$$

Card 1/ 3

APPROVED FOR RELEASE: 06/15/2000 CIA-RDP86-00513R001341820016-5"

"APPROVED FOR RELEASE: 06/15/2000 CIA-RDP86-00513R001341820016-5

On the Uniform Distribution of a Function System Which is the Solution of a Linear System of Difference Equations of First Order SOV/20-123-3-5/54

The matrix (2) : (a_{ij}) is assumed to have the rank s . The domain v is assumed to lie in the cube

(4) $0 \leqslant x_1 \leqslant 1, \ldots, 0 \leqslant x_s \leqslant 1$

and to have the volume $|v|$. Let $N_p(v)$ be the number of the points $M(\{\varphi_1(x)\}, \ldots, \{\varphi_s(x)\})$ which are in v for $x = 1,2,\ldots,p$. Theorem : The system (1) is uniformly distributed in the s-dimensional space (see Weyl [Ref 1]), if no root of the characteristic polynom of (3) is of absolute value 1 and if for every cube, the edges of which are parallel with the axes, which lies entirely in (4) and the volume of which is equal to $|v|$, it holds

$$\overline{\lim_{p\to\infty}} \frac{N_p(v)}{p} < c|v| \quad , \quad c = \text{const}$$

This theorem and another (similar) one are proved with the aid of a method of Postnikov [Ref 4] .

There are 5 references, 4 of which are Soviet, and 1 is German.

Card 2/3

APPROVED FOR RELEASE: 06/15/2000 CIA-RDP86-00513R001341820016-5"

"APPROVED FOR RELEASE: 06/15/2000 CIA-RDP86-00513R001341820016-5

POLOSUYEV, A.M.

16(1) PHASE I BOOK EXPLOITATION SOV/2660

Vsesoyuznyy matematicheskiy s"yezd. 3rd, Moscow, 1956

Trudy. t. 4: Kratkoye soderzhaniye sektsionnykh dokladov. Doklady inostrannykh uchenykh (Transactions of the 3rd All-Union Mathematical Conference in Moscow. vol. 4: Summary of Sectional Reports. Reports of Foreign Scientists) Moscow, Izd-vo AN SSSR, 1959. 247 p. 2,200 copies printed.

Sponsoring Agency: Akademiya nauk SSSR. Matematicheskiy institut.

Tech. Ed.: G.N. Shevchanko; Editorial Board: A.A. Abramov, V.G. Boltyanskiy, A.M. Vasil'yev, B.V. Medvedev, A.D. Myshkis, S.M. Nikol'skiy (Resp. Ed.), A.G. Postnikov, Yu. V. Prokhorov, K.A. Rybnikov, P. L. Ul'yanov, V.A. Uspenskiy, N.G. Chetayev, G. Ye. Shilov, and A.I. Shirshov.

PURPOSE: This book is intended for mathematicians and physicists.

COVERAGE: The book is Volume IV of the Transactions of the Third All-Union Mathematical Conference, held in June and July 1956. The book is divided into two main parts. The first part contains summaries of the papers presented by Soviet scientists at the Conference that were not included in the first two volumes. The second part contains the text of reports submitted to the editor by non-Soviet scientists. In those cases when the non-Soviet scientist did not submit a copy of his paper to the editor, the title of the paper is cited and, if the paper was printed in a previous volume, reference is made to the appropriate volume. The papers, both Soviet and non-Soviet, cover various topics in number theory, algebra, differential and integral equations, function theory, functional analysis, probability theory, topology, mathematical problems of mechanics and physics, computational mathematics, mathematical logic and the foundations of mathematics, and the history of mathematics.

Kemorov, P.N. (Leningrad). On certain integer indeterminate equations 7

Polosuyev, A.M. (Moscow). The value of trigonometric sums with exponential functions which cannot be improved (DAN SSSR, 104, No. 2, (1955) 8

Section on Algebra

Belousov, V.D. (Bel'tsy). Certain problems of the theory of quasigroups and loops 9

Kargapolov, M.I. (Perm'). Factorization of locally finite groups with finite classes of Sylow subgroups 9

Card 3/34

APPROVED FOR RELEASE: 06/15/2000 CIA-RDP86-00513R001341820016-5"

"APPROVED FOR RELEASE: 06/15/2000 CIA-RDP86-00513R001341820016-5

POLOSUYEV, A.M.

One problem on the uniform distribution of a system of functions. Vest.Mosk.un.Ser.1: Mat., mekh. 15 no.2: 21-32 Mr-Ap '60. (MIRA 13:8)

1. Kafedra teorii chisel Moskovskogo universiteta.
(Functions)

APPROVED FOR RELEASE: 06/15/2000 CIA-RDP86-00513R001341820016-5"

"APPROVED FOR RELEASE: 06/15/2000 CIA-RDP86-00513R001341820016-5

NECHAYEV, V.I.; POLOSUYEV, A.M.

Distribution of nonresidues and primitive roots in a sequence satisfying a finite-difference equation with polynomial coefficients. Vest. Mosk. un. Ser. 1: Mat., mekh. 19 no.6:75-84 N-D '64. (MIRA 18:2)

1. Kafedra teorii chisel Moskovskogo universiteta.

APPROVED FOR RELEASE: 06/15/2000 CIA-RDP86-00513R001341820016-5"

"APPROVED FOR RELEASE: 06/15/2000 CIA-RDP86-00513R001341820016-5

KASSELS, V.S. [Cassels, John William Scott]; POLOSUYEV, A.M. [translator]; GEL'FOND, A.O., red.

[Introduction to diophantine approximation] Vvedenie v teoriiu diofantovykh priblizhenii. Pod red. i s dop. A.O. Gel'fona. Translated from the English. Moskva, Izd-vo inostr. lit-ry, 1961. 212 p. (MIRA 15:2)
(Diophantine analysis)

APPROVED FOR RELEASE: 06/15/2000 CIA-RDP86-00513R001341820016-5"

"APPROVED FOR RELEASE: 06/15/2000 CIA-RDP86-00513R001341820016-5

32566

S/044/61/000/012/021/054
C111/C333

16.3400

AUTHOR: Polosuyev, A. M.

TITLE: On the uniformity of distribution of a system of functions which is solution of a system of linear difference equations of first order. II. Construction of a uniformly distributed system of functions

PERIODICAL: Referativnyy zhurnal, Matematika, no. 12, 1961, 35-36, abstract 12B156. ("Vestn. Mosk. un-ta. Matem., mekhan.", 1960, no. 6, 20-25)

TEXT: Part I see R Zh Mat, 1961, 7B191. The construction of a system of functions uniformly distributed in the s-dimensional space is given which is the solution of the system of difference equations

$$y_{x+1}^{(i)} = \sum_{k=1}^{s} a_{ki}\, y_x^{(k)} + \gamma_i \quad (i = 1, 2, 3, \ldots, s)$$

with integer constant coefficients; it is assumed that all characteristic numbers of the matrix of this system are of absolute value greater than one.

[Abstracter's note: Complete translation.]

Card 1/1

APPROVED FOR RELEASE: 06/15/2000 CIA-RDP86-00513R001341820016-5"

"APPROVED FOR RELEASE: 06/15/2000 CIA-RDP86-00513R001341820016-5

POLOSUYEV, A.M.

Uniformness of distribution of a system of functions forming the solution of a system of linear simultaneous difference equations of the first order. Part 2: Construction of a uniformly distributed system of functions. Vest.Mosk. un. Ser. 1: Mat., mekh.15 no.6:20-25 N-D '60. (MIRA 14:3)

1. Kafedra teorii chisel Moskovskogo universiteta.
(Difference equations)

APPROVED FOR RELEASE: 06/15/2000 CIA-RDP86-00513R001341820016-5"

"APPROVED FOR RELEASE: 06/15/2000 CIA-RDP86-00513R001341820016-5

POLOSUYEV, A.M.

Uniformness of distribution of a system of functions representing the solution to a system of linear simultaneous difference equations of the first order. Vest. Mosk. un. Ser. 1: Mat., mekh. 15 no.5:29-39 S-O '60. (MIRA 13:11)

1. Kafedra teorii chisel Moskovskogo universiteta.
(Difference equations)

APPROVED FOR RELEASE: 06/15/2000 CIA-RDP86-00513R001341820016-5"

"APPROVED FOR RELEASE: 06/15/2000 CIA-RDP86-00513R001341820016-5

86198

S/055/60/000/005/004/010
C111/C222

16.1000

AUTHOR: Polosuyev, A.M.

TITLE: On the Uniformity of Distribution of a System of Functions Forming the Solution of a System of Linear Finite Difference Equations of First Order. I. Criterion of Uniform Distribution

PERIODICAL: Vestnik Moskovskogo universiteta. Seriya I, matematika, mekhanika, 1960, No.5, pp.29-39

TEXT: Let the system of s functions $\psi_x^{(1)}, \ldots, \psi_x^{(s)}$ with real initial values $\psi_1^{(1)} = \mu_1, \ldots, \psi_1^{(s)} = \mu_s$ be a solution of the inhomogeneous linear system of difference equations of first order

$$(1) \qquad \begin{aligned} y_{x+1}^{(1)} &= a_{11}y_x^{(1)} + \ldots + a_{s1}y_x^{(s)} + \gamma_1 \\ &- - - - - - - - - - - - - - \\ y_{x+1}^{(s)} &= a_{1s}y_x^{(1)} + \ldots + a_{ss}y_x^{(s)} + \gamma_s , \end{aligned}$$

where all a_{ij} are constant integers, and $\gamma_1, \ldots, \gamma_s$ are real numbers. Let

Card 1/4

APPROVED FOR RELEASE: 06/15/2000 CIA-RDP86-00513R001341820016-5"

"APPROVED FOR RELEASE: 06/15/2000 CIA-RDP86-00513R001341820016-5

86198

S/055/60/000/005/004/010
C111/C222

On the Uniformity of Distribution of a System of Functions Forming the Solution of a System of Linear Finite Difference Equations of First Order. I. Criterion of Uniform Distribution

the determinant of the matrix

(2) $$A = \begin{pmatrix} a_{11} \cdots a_{1s} \\ a_{s1} \cdots a_{ss} \end{pmatrix}$$

be different from zero.

Problem: Determine the initial values $\mu_1, \ldots, \mu_s$ so that the system of functions $\psi_x^{(1)}, \ldots, \psi_x^{(s)}$ is uniformly distributed in the s-dimensional space.

Let $\{Y\} = (\{y_1\}, \ldots, \{y_s\})$ denote a vector the components of which are the fractional parts of the components of the vector $Y = (y_1, \ldots, y_s)$. Let $(\varphi_x^{(1)}, \ldots, \varphi_x^{(s)}) = (x_1, \ldots, x_s)A^x$, i.e. $\varphi_x^{(j)} = x_1 a_{1j}^{(x)} + \ldots + x_s a_{sj}^{(x)}$ where $a_{kj}^{(x)}$ are elements of A^x. The system $\varphi_x^{(1)}, \ldots, \varphi_x^{(s)}$ is a solution of the

Card 2/4

APPROVED FOR RELEASE: 06/15/2000 CIA-RDP86-00513R001341820016-5"

"APPROVED FOR RELEASE: 06/15/2000 CIA-RDP86-00513R001341820016-5

86198
S/055/60/000/005/004/010
C111/C222

On the Uniformity of Distribution of a System of Functions Forming the Solution of a System of Linear Finite Difference Equations of First Order. I. Criterion of Uniform Distribution

distributed.
In (Ref.4) the author has shown that the theorem is also valid if $\gamma_1 = \ldots = \gamma_s = 0$. Then $\psi_x^{(1)} = \varphi_x^{(1)}, \ldots, \psi_x^{(s)} = \varphi_x^{(s)}$.

The author mentions A.G.Postnikov and I.I.Shapiro-Pyatetskiy. There are 4 references: 3 Soviet and 1 German.

ASSOCIATION: Kafedra teorii chisel (Chair of Number Theory)

SUBMITTED: January 11, 1960

Card 4/4

APPROVED FOR RELEASE: 06/15/2000 CIA-RDP86-00513R001341820016-5"

"APPROVED FOR RELEASE: 06/15/2000 CIA-RDP86-00513R001341820016-5

POLOSUZHIN, A.P.

Studies on the role of blood storage: pathogenesis and therapy of shock. Tr. Vsesoius. obsh. fiziol. no. 1:55-71 1952. (CLML 24:1)

1. Delivered 20 June 1950, Alma-Ata.

APPROVED FOR RELEASE: 06/15/2000 CIA-RDP86-00513R001341820016-5"

"APPROVED FOR RELEASE: 06/15/2000 CIA-RDP86-00513R001341820016-5

POLOSUKHIN, A.P.; BEKETAYEV, A.M.; MARKELOV, I.I.

New data on vasodilator effect of the vagus nerve. Fiziol. zhur. 41 no.6:760-764 '55. (MLRA 9:3)

1. Institut fiziologii AN Kazakhskoy SSR, Alma-Ata.
(NERVES, VAGUS, physiology,
eff. of section in animals, vasodilat)
(CARDIOVASCULAR SYSTEM, physiology,
eff. of section of vagus nerves in dogs, vasodilat.)

APPROVED FOR RELEASE: 06/15/2000 CIA-RDP86-00513R001341820016-5"

"APPROVED FOR RELEASE: 06/15/2000 CIA-RDP86-00513R001341820016-5

POLOSYAN, Kh. P.

USSR/Climatology

Card 1/1

Authors : Budyko, M. I., and Polosyan, Kh. P. Professors

Title : Change in climate of the surface air layer during melioration of arid regions

Periodical : Priroda, 5, 45 - 51, May 1954

Abstract : Irrigation of arid regions, forestation etc., will undoubtedly bring about a change in the humidity of the air in the layer near the ground and will change the intensity of vertical movements in the atmosphere. Irrigation of arid land will secure additional moisture of the soil. The amount of river water, entering the field during the vegetating period, may considerably exceed the amount of precipitation, especially during dry years. This additional moisture will evaporate. Forestation will somewhat increase the evaporation, but by retaining the snow on fields and by reducing winds, it will increase the moisture of the soil, during spring snow thawing season. Graphs.

Institution : ....

Submitted : ....

APPROVED FOR RELEASE: 06/15/2000 CIA-RDP86-00513R001341820016-5"

"APPROVED FOR RELEASE: 06/15/2000 CIA-RDP86-00513R001341820016-5

POLOSUYEV, A.M.

Multidimensional case of best possible estimates for trigonometric sums involving exponential functions. Dokl.AN SSSR 104 no.2:186-189 S '55. (MLRA 9:2)

1.Moskovskoye vysshaye tekhnicheskoye uchilishche imeni Baumana. Predstavleno akademikom I.M.Vinogradovym.
(Fourier's series)

APPROVED FOR RELEASE: 06/15/2000 CIA-RDP86-00513R001341820016-5"

"APPROVED FOR RELEASE: 06/15/2000 CIA-RDP86-00513R001341820016-5

POLOSUYEV, A.M.

3

1

Polosuev, A. M. A multidimensional case of unimprovable estimates of trigonometric sums with exponential functions. Dokl. Akad. Nauk SSSR (N.S.) 104 (1955), 186–189. (Russian)

1 - F/W

The author generalizes a result of N. M. Korobov [same Dokl. (N.S.) 89 (1953), 597–600; MR 15, 15] by showing that given any function $\phi(p)$ which tends to infinity as $p\to\infty$, no matter how slowly, real numbers $\alpha_1, \alpha_2, \cdots, \alpha_s$ can be constructed such that

$$\sum_{x=1}^{p} \exp\{2\pi i \sum_{i=1}^{s} m_i\alpha_i q_i^x\} = o\{\varphi(p)\},$$

for any integers $m_1, m_2, \cdots, m_s$ not all zero. Here $q_1, q_2, \cdots, q_s$ are fixed integers greater than unity. It is shown, further, that for no real numbers $\alpha_1, \alpha_2, \cdots, \alpha_s$ can the right-hand side of this result be replaced by $O(1)$.

R. A. Rankin (Glasgow).

APPROVED FOR RELEASE: 06/15/2000 CIA-RDP86-00513R001341820016-5"

"APPROVED FOR RELEASE: 06/15/2000 CIA-RDP86-00513R001341820016-5

P/520/61/000/002/001/001
E032/E414

AUTHOR: Poloszyk, Stanisław, Engineer

TITLE: Measurement of time in the range 10 to 2500 μsec using a cathode ray tube as an indicator

SOURCE: Poznan. Politechnika. Zeszyty naukowe. no.9. Elektryka. no.2. 1961. 111-119

TEXT: The circuit described in this paper may be used to measure time intervals in the above range at a maximum repetition frequency of 35 cps. A block diagram of the apparatus is shown in Fig.1. The system is brought into operation by a negative pulse which is amplified by the input amplifier and is then fed into a discriminator which cuts off possible unwanted pulses. The discriminator is followed by a continuously variable gate. The signal released by the gate triggers the time base generator, the saw-tooth generator and the sine-wave generator and also brightens up the oscilloscope trace. The saw-tooth generator is used in conjunction with the differentiating circuit to produce an adjustable time marker which can be moved along the time base by means of a potentiometer calibrated in microseconds. The sine-wave generator is used to produce calibrating pulses which

Card 1/3

APPROVED FOR RELEASE: 06/15/2000 CIA-RDP86-00513R001341820016-5"

"APPROVED FOR RELEASE: 06/15/2000 CIA-RDP86-00513R001341820016-5

serve as a check on the scale of the above potentiometer. The brightness control, whose operation is synchronized with the time base, is operated by a positive pulse applied to the grid of the CRO tube which is normally in the cut-off state. A basic circuit for the entire device is reproduced and described in detail. There are 4 figures.

ASSOCIATION: Katedra Automatyki i Elektroniki Przemysłowej (Department of Automation and Industrial Electronics)

SUBMITTED: June 28, 1960

Fig.1. 1 - amplifier, 2 - discriminator, 3 - gate, 4 - sine-wave generator, 5 - limiter. differential circuit, 6 - saw-tooth generator, 7 - comparator circuit for time marker, 8 - timebase generator.

APPROVED FOR RELEASE: 06/15/2000 CIA-RDP86-00513R001341820016-5"

"APPROVED FOR RELEASE: 06/15/2000 CIA-RDP86-00513R001341820016-5

Measurement of time ...

P/520/61/000/002/001/001
E032/E414

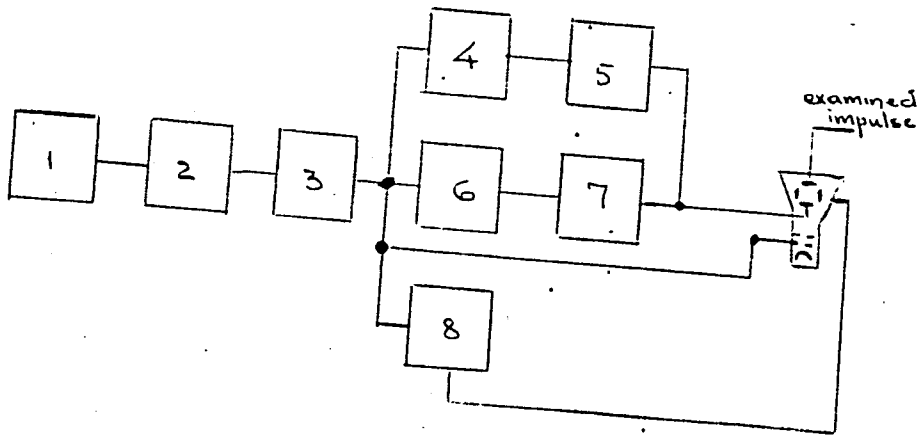

Card 3/3

Fig.1.

APPROVED FOR RELEASE: 06/15/2000 CIA-RDP86-00513R001341820016-5"

"APPROVED FOR RELEASE: 06/15/2000 CIA-RDP86-00513R001341820016-5

POLOSZYK, Stanislaw, mgr inz.

Electronic dosimeter of liquid fuel with digital readout of the measurements of the number of rotations and time. Lacznosc Wroclaw 5:189-193 '62.

1. Katedra Automatyki i Elektroniki Przemyslowej, Politechnika, Poznan.

APPROVED FOR RELEASE: 06/15/2000 CIA-RDP86-00513R001341820016-5"

"APPROVED FOR RELEASE: 06/15/2000 CIA-RDP86-00513R001341820016-5

WISNIEWSKI, Teofil, dr inz., adiunkt; POLOSZYK, Stanislaw, mgr inz., st. asystent; GROCHOLSKI, Henryk, mgr inz., st. asystent

Electronic device for fuel consumption measurements of combustion engines. Przegl mech 23 no. 3: 84-87 10 F '64.

1. Katedra Silnikow Spalinowych, Politechnika, Poznan (for Wisniewski). 2. Katedra Automtyki i Elektroniki, Politechnika, Poznan (for Poloszyk). 3. Katedra Podstaw Elektroniki, Politechnika, Poznan (for Grocholski).

APPROVED FOR RELEASE: 06/15/2000 CIA-RDP86-00513R001341820016-5"

"APPROVED FOR RELEASE: 06/15/2000 CIA-RDP86-00513R001341820016-5

POLOSZYK, Stanislaw, mgr. inz.

Time measurement in the limits of 10-25000 using the lamp of an oscilloscope as indicator. Elektryka Poznan no. 2:111-119 '61.

1. Kstedra Automatyki i Elektroniki Przemyslowej, Politechnika, Poznan

APPROVED FOR RELEASE: 06/15/2000 CIA-RDP86-00513R001341820016-5"

"APPROVED FOR RELEASE: 06/15/2000 CIA-RDP86-00513R001341820016-5

BIEDRON, Stefan; DARDAS, Hieronim; POLOSZYK, Stanislaw

The automized Leonard circuit. Wiad elektrotechn 19 no.7:223-224 Jl '59.

APPROVED FOR RELEASE: 06/15/2000 CIA-RDP86-00513R001341820016-5"

"APPROVED FOR RELEASE: 06/15/2000 CIA-RDP86-00513R001341820016-5

POLOTAKY, I. G.

"The Chemical Action of Cavitations". (p. 1054)

SO: Journal of General Chemistry, (Zhurnal Obshchei Khimii), 1947, Vol. 17, No. 6

APPROVED FOR RELEASE: 06/15/2000 CIA-RDP86-00513R001341820016-5"

"APPROVED FOR RELEASE: 06/15/2000 CIA-RDP86-00513R001341820016-5

POLOTAY, A.M.

POLOVKO, Ivan Kirillovich, professor; ZAMORII, P.K., professor, otvetstvennyy redaktor; POLOTAY, A.M., redaktor; KHOKHANOVSKAYA, T.I., tekh-redaktor.

[Great and small phenomena of nature] Velikie i malye iavleniia prirody. [Kiev] Izd-vo Kievskii gos.univ.im.T.G.Shevchenko, 1957. 30 p.

(Geophysics) (MLRA 10:6)

APPROVED FOR RELEASE: 06/15/2000 CIA-RDP86-00513R001341820016-5"

"APPROVED FOR RELEASE: 06/15/2000 CIA-RDP86-00513R001341820016-5

POLOTAY, A.M.

NEPOROZHNIY, Petr Stepanovich [Neporozhnii, P.S.]; ZHELEZNYAK, I.A., kand. tekhn.nauk, red.; POLOTAY, A.M., red.

[Large hydroelectric power stations and their role in the electrification of the Ukrainian SSR] Potuzhni hidroelektrostantsii ta ikh rol' v elektryfikatsii Ukrains'koi RSR. Kyiv, 1958. 45 p. (Tovarystvo dlia poshyrennia politychnykh i naukovykh znan' Ukrains'koi RSR. Ser.4, no.2) (MIRA 11:6)

1. Zastupnik golovi Derzhplanu URSR (for Neporozhniy)
(Ukraine—Hydroelectric power stations)

APPROVED FOR RELEASE: 06/15/2000 CIA-RDP86-00513R001341820016-5"

"APPROVED FOR RELEASE: 06/15/2000 CIA-RDP86-00513R001341820016-5

BEZUGLYY, A.M.; POLOTAY, A.M., red.; ROZENTSVEYG, Ye., tekhn. red.

[Manual for practical exercises in a course on general geology] Posobie po prakticheskim rabotam kursa obshchei geologii. [Kiev] Izd-vo Kievskogo gos. univ. im. T.G.Shevchenko, 1958. 178 p. (MIRA 11:10)

(Geology--Handbooks, manuals, etc.)

APPROVED FOR RELEASE: 06/15/2000 CIA-RDP86-00513R001341820016-5"

"APPROVED FOR RELEASE: 06/15/2000 CIA-RDP86-00513R001341820016-5

POLOTAY, A.M.

KRIVONOS, Petr Fedorovich; D'YAKONOV, V.K., red.; POLOTAY, A.M., red.

[Railroad transportation as an important branch of the national economy of the Soviet Union; on the All-Union Railroad Worker's Day] Zheleznodorozhnyi transport kak vazhneishaia otrasl' narodnogo khoziaistva Soiuza SSR (ko Vsesoiuznomu dniu zheleznodorozhnika). Kiev, Ob-vo po rasprostraneniiu polit. i nauchnykh znanii USSR, 1957. 13 p. (MIRA 11:2)
(Railroads)

APPROVED FOR RELEASE: 06/15/2000 CIA-RDP86-00513R001341820016-5"

"APPROVED FOR RELEASE: 06/15/2000 CIA-RDP86-00513R001341820016-5

VOVCHENKO, Ivan Vsevolodovich, kand.sel'skokh.nauk; VERBIN, Ya.Ya. [Verbin, IA.IA.], prof., red.; POLOTAY, A.M. [Polotai, A.M.], red.

[Most important cultivation practices in growing winter wheat] Naivazhlyvishi agrotekhnichni pryiomy vyroshchuvannia ozymoi pshenytsi. Kyiv, 1958. 31 p. (Tovarystvo dlia poshyreninia politychnykh i naukovykh znan' Ukrains'koi RSR. Ser.3, no.9)
(Wheat) (MIRA 12:2)

APPROVED FOR RELEASE: 06/15/2000 CIA-RDP86-00513R001341820016-5"

"APPROVED FOR RELEASE: 06/15/2000 CIA-RDP86-00513R001341820016-5

POLOTAY, T.P.

Comrade Ingil'deeva's "secrets". Leg.prom. 7 no.10:11-12 O '47.
(MLRA 6:11)
(Hosiery industry)

APPROVED FOR RELEASE: 06/15/2000 CIA-RDP86-00513R001341820016-5"

"APPROVED FOR RELEASE: 06/15/2000 CIA-RDP86-00513R001341820016-5

POLOTAY, V.A.

FEDOROV, I.I.; POLOTAY, V.A. (L'vov)

Appearance and disappearance of trophic ulcers following section of the sciatic nerve [with summary in English]. Arkh.pat. 19 no.9:74-78 '57. (MIRA 10:12)

1. Iz kafedry gistologii Chernovitskogo meditsinskogo instituta.
(ULCER, experimental,
trophic after section of sciatic nerve, appearance & disappearance (Rus))
(NERVES, ASCIATIC, phyiology,
section causing trophic ulcer, appearance & disappearance (Rus))

APPROVED FOR RELEASE: 06/15/2000 CIA-RDP86-00513R001341820016-5"

"APPROVED FOR RELEASE: 06/15/2000 CIA-RDP86-00513R001341820016-5

NOSKOV, I.G., kand.sel'skokhoz.nauk (Tashkent); PONOMARENKO, G.Ya.; ZAKRIVIDOROGA, S.P.; ZAKRIVIDOROGA, Z.S.; LIPSITS, D.V.; LYUBOVSKAYA, P.I.; POLOTAY, V.A.; TARAKHOVSKIY, M.L.; FASTOVSKIY, V.L.

Letters to the editor. Zashch. rast. ot vred. i bol. 6 no.8:10 Ag '61. (MIRA 15:12)

1. Vsesoyuznaya stantsiya po raku kartofelya Vsesoyuznogo instituta zashchity rasteniy i Chernovitskiy meditsinskiy institut.

(Plants, Protection of)
(Synchytrium—Toxicology)

APPROVED FOR RELEASE: 06/15/2000 CIA-RDP86-00513R001341820016-5"

"APPROVED FOR RELEASE: 06/15/2000 CIA-RDP86-00513R001341820016-5

ZAKRIVIDOROGA, S.P.; ZAKRIVIDOROGA, Z.S.; LIPSITS, D.V.; LYUBOVSKAYA, P.I.; POLOTAY, V.A.; TARAKHOVSKIY, M.L.; FASTOVSKIY, V.L.

Toxicity for animals of the cancerous potato. Vop. pit. 21 no.5: 58-66 S-O '62. (MIRA 17:5)

1. Iz laboratorii biokhimii Vsesoyuznoy nauchno-issledovatel'skoy stantsii po paku kartofelya i kafedr farmakologii, patofiziologii, patoanatomii i gistologii meditsinskogo instituta, Chernovtsy.

APPROVED FOR RELEASE: 06/15/2000 CIA-RDP86-00513R001341820016-5"

"APPROVED FOR RELEASE: 06/15/2000 CIA-RDP86-00513R001341820016-5

POLOTAY, V.A.

Tubage of peripheral nerves with aid of autogenous veins. Vopr. neirokhir 14 no.4:59-61 July-Aug. 1950. (CIML 20:1)

1. Of the Department of Pathological Physiology (Head -- Prof. N. I. Fedorov), Chernovitsy Medical Institute, Chernovitsy).

APPROVED FOR RELEASE: 06/15/2000 CIA-RDP86-00513R001341820016-5"

"APPROVED FOR RELEASE: 06/15/2000 CIA-RDP86-00513R001341820016-5

ZAKRIVIDOROGA, S.P.; LIPSITS, D.V.; POLOTAY, V.A.; RED'KO, G.F.; TARAKHOVSKIY, M.L.

Effect of warty potatoes on animal organisms. Vop.pit. 19 no.4: 82-83 Jl-Ag '60. (MIRA 13:11)

1. Iz laboratorii (zav. - kand.biolog.nauk D.V. Lipsits) Vsesoyuznoy nauchno-issledovatel'skoy stantsii po raku kartofelya (Chernovitsy) i kafedr farmakologii (zav. - prof. S.P. Zakrividoroga) i gistologii (zav. - dotsent I.A. Shevchuk) Chernovskogo meditsinskogo instituta.

(POTATOES)

APPROVED FOR RELEASE: 06/15/2000 CIA-RDP86-00513R001341820016-5"

"APPROVED FOR RELEASE: 06/15/2000 CIA-RDP86-00513R001341820016-5

POLOTAY, V.V.

Machine for testing for friction and wear in corrosive media at high rates of sliding. Fiz.-khim. mekh. mat. 1 no.5: 603-604 '65. (MIRA 19:1)

1. Institut problem materialovedeniya AN UkrSSR, Kiyev. Submitted Oct. 15, 1964.

APPROVED FOR RELEASE: 06/15/2000 CIA-RDP86-00513R001341820016-5"

"APPROVED FOR RELEASE: 06/15/2000 CIA-RDP86-00513R001341820016-5

POLOTEBNOV, A.

"Pathological Significance of Mold," Meditsinskiy vestnik, 12, 459, 1872

APPROVED FOR RELEASE: 06/15/2000 CIA-RDP86-00513R001341820016-5"

"APPROVED FOR RELEASE: 06/15/2000 CIA-RDP86-00513R001341820016-5

Polotebnova, N.A.

Synthesis of complex heteropolyacids. A. [illegible] Kokin, M. B. Bardin, and [illegible] Polotebnova. Uchenye Zapiski Kishinev. Univ. [illegible] Referat. Zhur. Khim. 1955 [illegible] favorable [illegible] formation in soms and their sepn. in the free state the following [illegible]

M. Hosch

APPROVED FOR RELEASE: 06/15/2000 CIA-RDP86-00513R001341820016-5"

"APPROVED FOR RELEASE: 06/15/2000 CIA-RDP86-00513R001341820016-5

Distr: 4E2c/4E4j

Volumetric method for determination of molybdenum. A. I. Kokorin and N. A. Polotebnova. *Uchenye Zapiski Kaliinin. Univ.* 14, 115-17(1954); *Referat. Zhur., Khim.* 1955, Abstr. No. 55360.—The method for detn. of Mo in the presence of large amts. of W is based on titrating Mo(VI) with $Ti_2(SO_4)_3$ in 4*N* H_2SO_4, the titer of which remains const. during a workday. The indicator is monoindigosulfonic acid. The method is reproducible, accurate, and allows fast Mo detn. in heteropolyacids. N. Vasileff

APPROVED FOR RELEASE: 06/15/2000 CIA-RDP86-00513R001341820016-5"

"APPROVED FOR RELEASE: 06/15/2000 CIA-RDP86-00513R001341820016-5

POLOTEBNOVA, N.A.

8

Utilization of cobalt and lead for reduction during volumetric determination of molybdenum, vanadium, and tungsten. N. A. Polotebnova and L. M. Branover. *Uchenye Zapiski Kishinev. Univ.* 14, 119-21(1954); *Referat. Zhur., Khim.* 1955, Abstr. No. 55361.—Metallic Co reduces Mo(VI) to Mo(III) in 3.7-1.7*N* H_2SO_4, and V(V) to V(IV) at 6-5*N* H_2SO_4. Metallic Pb reduces W(VI) to W(IV) in 10.7*N* HCl and CO_2 atm. The reduction is accomplished in an ordinary 100-ml. dropping funnel, and the end point is detd. visually: brown-yellow for Mo(V), gray for V(IV), and crimson for W(IV). The use of the mentioned reducers has not been described formerly. N. Vasileff

1/1

APPROVED FOR RELEASE: 06/15/2000 CIA-RDP86-00513R001341820016-5"

"APPROVED FOR RELEASE: 06/15/2000 CIA-RDP86-00513R001341820016-5

POLOTEBNOVA, N. A.

USSR/Chemistry Synthesis

Card : 1/1 Pub. 151 - 9/35

Authors : Kokorin, A. I., and Polotebnova, N. A.

Title : Heterotriacids. Part 3.- Silica-tungstic-vanadic acid

Periodical : Zhur. ob. khim. 24, Ed. 7, 1137 - 1141, July 1954

Abstract : Conditions favorable for the synthesis (by the etherate method) and separation, in crystalline form, of silicic-tungstic-vanadic (heterotri-) acids, are described. Preliminary conversion of n-tungstate into meta-tungstate is considered to be the decisive factor for the synthesis of this hetero-triacid. The composition and chemical formula of the hetero-triacid, are described. Two USSR references. Tables.

Institution : State University, Kishinev, Mold-SSR

Submitted : August 24, 1953

APPROVED FOR RELEASE: 06/15/2000 CIA-RDP86-00513R001341820016-5"

"APPROVED FOR RELEASE: 06/15/2000 CIA-RDP86-00513R001341820016-5

POLOTEBNOVA, N. A.

Heterotriacids. IV. Synthesis and analysis of germanium tungstovanadic acid. A. I. Kokorin and N. A. Polotebnova. *J. Gen. Chem. U.S.S.R.* 24, 1691-3(1954)(Engl. translation).—See *C.A.* 49, 13007*f*. B. M. R.

APPROVED FOR RELEASE: 06/15/2000 CIA-RDP86-00513R001341820016-5"

"APPROVED FOR RELEASE: 06/15/2000 CIA-RDP86-00513R001341820016-5

POLOTEBNOVA, N. A.

USSR/Chemistry - Hetero-tri-acids

Card 1/1 Pub. 151 - 4/37

Authors : Kokorin, A. I., and Polotebnova, N. A.

Title : Hetero-tri-acids. Part 4.- Synthesis and analysis of germanictungsticvanadic acid.

Periodical : Zhur. ob. khim. 24/10, 1718-1721, Oct 1954

Abstract : A new and more effective method for the synthesis of saturated germanictungsticvanadic acid is introduced. The basic substance for the synthesis of this acid is described. The conditions favorable for the distillation of small Ge amounts in the form of germanium tetrachloride in the presence of large W amounts, are explained. The results obtained during the precipitation of small Ge amounts by means of tannin in the presence of large W amounts after separation of the latter in the form of tungstic acid, are listed. The composition of synthesized $H_8[Ge(W_2O_7)_5V_2O_6] \cdot nH_2O$, is described. Five references: 4-USSR and 1-German (1947-1954). Tables.

Institution : State University, Kishinev

Submitted : April 20, 1954

APPROVED FOR RELEASE: 06/15/2000 CIA-RDP86-00513R001341820016-5"

"APPROVED FOR RELEASE: 06/15/2000 CIA-RDP86-00513R001341820016-5

POLOTEBNOVA, N. A.

Polotebnova, N. A. -- "Heteropolyacids with Silicon and Germanium as Central Atoms." Min Higher Education, Kishinev State U, Kishinev, 1955. (Dissertation for Degree of Candidate of Chemical Science)

SO: Knizhnaya Letopis', No. 23, Moscow, PP. 87-104.

APPROVED FOR RELEASE: 06/15/2000 CIA-RDP86-00513R001341820016-5"

"APPROVED FOR RELEASE: 06/15/2000 CIA-RDP86-00513R001341820016-5

POLOTEBNOVA, N.A.

9 New colorimetrical reactions for the determination of antimony. A. I. Kokorin and N. A. Polotebnova (State Univ., Kishinev). *Trudy Komissii Anal. Khim. Akad. Nauk S.S.S.R., Inst. Geokhim. i Anal. Khim.* 7, 205-10 (1956).—The silicomolybdenovanadic and germanomolybdenovanadic acids were used for the colorimetric detn. Prepn.: To 5 g. $Na_2SiO_3.9H_2O$ in 125 ml. H_2O, 2 g. $NaVO_3$ (dissolved first by heating in the 100 ml. H_2O), and 31 g. $MoO_3.H_2O$ were added. The mixt. was refluxed for 2 hrs. After cooling, the soln. was transferred to a separatory funnel contg. 100 ml. of EtO_2. To the mixt. 115 ml. of H_2SO_4 (1:1) was added with shaking. After settling, the bottom layer was transferred into another separatory funnel contg. 6*N* H_2SO_4 satd. with EtO_2. The clear soln. was carefully decanted into a wide beaker. H_2O was added and the ether evapd. by carefully heating at 50-60°. The soln. was allowed to stand at room temp. for crystn. Red crystals of silicomolybdenovanadic acid were kept in an amber glass bottle. The germanomolybdenovanadic acid was prepd. as follows: to 1 g. GeO_2 in Na_2CO_3 soln. and 0.6 g. $NaVO_3$ in H_2O a small portion 18 g. $H_2MoO_4.H_2O$ in an aq. soln. was added. For complete dissolving of H_2MoO_4 the necessary amt. of alkali was added. The mixt. was dild. with H_2O to 100 ml., acidified with H_2SO_4 (1:1) to 0.2*N*, and refluxed for 2 hrs. After cooling the soln. was transferred to a separatory funnel contg. EtO_2 and H_2SO_4. The balance of the procedure was the same as above. For the colorimetric measurement a 5% soln. of the acids in H_2O was used. Detn. of Sb: to 0.1-0.7 ml. contg. 0.1-0.7 mg. of Sb *N* H_2SO_4 was added to make a total vol. of 3 ml., then 0.2 ml. of 5% soln. of silicomolybdenovanadic or germanomolybdenovanadic acid was added and after 1 min. the soln. was transferred to a 10-ml. volumetric flask dild. to the mark with H_2O and the blue color colorimetrically measured in a microphotocolorimeter. N. C.

2

5000

APPROVED FOR RELEASE: 06/15/2000 CIA-RDP86-00513R001341820016-5"

"APPROVED FOR RELEASE: 06/15/2000 CIA-RDP86-00513R001341820016-5

Polotebnova, N.A

USSR/Inorganic Chemistry. Complex Compounds. C

Abs Jour : Ref Zhur - Khimiya, No. 8, 1957, 26473.

Author : Kokorin, A.I.; Polotebnova, N.A.

Inst :

Title : Heterotriacids. V. Heterotriacids of Phosphorus and Silicium with Variable Composition of Addends Containing Molybdenum and Tungsten.

Orig Pub : Zh. obshch. khimii, 1956, 26, No. 1, 3 - 10.

Abstract : The heterotriacids $H_7[P(Mo_2O_7)_n(W_2O_7)_m].xH_2O$ (I) and $H_8[Si(Mo_2O_7)_n(W_2O_7)_m].xH_2O$ (II) with m + n = 6 and x = 16 to 28 were separated by the esther method using metatungstate and metamolybdate as initial material. Experiments of potentiometric titration of I and II with KOH showed that the salts

$$K_5H_2[P(Mo_2O_7)_n(W_2O_7)_m]$$ and

Card 1/2

APPROVED FOR RELEASE: 06/15/2000 CIA-RDP86-00513R001341820016-5"

"APPROVED FOR RELEASE: 06/15/2000 CIA-RDP86-00513R001341820016-5

POLOTEBNOVA, N. A.

79-2-6/58

AUTHORS: Kokorin, A. I., and Polotebnova, N. A.

TITLE: Heterotriacids. Part 6. Certain Properties of Heterotriacids (Geterotrikisloty. VI. Nekotoryye svoystva geterotrikislot)

PERIODICAL: Zhurnal Obshchey Khimii, 1957, vol 27, No 2, pp 304-310 (U.S.S.R).

ABSTRACT: Data are presented on some of the important properties of heterotriacids synthesized by the authors. Employing the method of potentiometric titration with a potassium hydroxide solution with the use of a glass electrode and also by measuring the electrical conductivity in pH values aqueous solutions, the experimenters showed that the basicity of the heterotriacids, containing vanadium in role of addenda, equals five or six. The number of salt-forming hydrogen ions neutralized by the potassium hydroxide solution was found to be 5 in heterotriacids containing V at the central Ge atom regardless of the second addendum Mo or W. Identical is the case in vanadium heterotriacids of P and Si with Mo in role of second addendum. The number of hydrogen ions in phosphoro-and silicotungstenvanadium heterotriacids was established as six. The melting points of heterotriacid crystal hydrates were determined as was their

Card 1/2

APPROVED FOR RELEASE: 06/15/2000 CIA-RDP86-00513R001341820016-5"

"APPROVED FOR RELEASE: 06/15/2000 CIA-RDP86-00513R001341820016-5

79-2-6/58

Heterotriacids. Part 6. Certain Properties of Heterotriacids

dependence upon the nature of the heteropolyanions.

The possibility of using synthesized heterotriacids in the role of oxidizers and precipitating agents in certain analytical reactions is discussed. The stability of the reduction products was found to be dependent upon the W content in the mixture.

3 tables, 2 graphs. There are 8 references of which 6 are Slavic

ASSOCIATION: The Kishenev State University

PRESENTED BY:

SUBMITTED: April 3, 1956

AVAILABLE: Library of Congress

Card 2/2

APPROVED FOR RELEASE: 06/15/2000 CIA-RDP86-00513R001341820016-5"

"APPROVED FOR RELEASE: 06/15/2000 CIA-RDP86-00513R001341820016-5

POLATEBNOVA, N.A.

AUTHOR: Bilimovich, G. N. SOV/75-14-4-30/30

TITLE: Section of Analytical Chemistry of the VIII Mendeleyev Congress on General and Applied Chemistry

PERIODICAL: Zhurnal analiticheskoy khimii, 1959, Vol 14, Nr 4, pp 511-512 (USSR)

ABSTRACT: Approximately 300 persons participated in the work of the Department of Analytical Chemistry, among them representatives of various scientific research institutes, higher schools and industrial enterprises in Russia, scientists from China, Bulgaria, the ČSR, Poland, Hungary, and Italy. Approximately 70 reports were heard. In his opening speech I. P. Alimarin reported on the achieved results and on modern problems of analytical chemistry. I. V. Tananayev reported on the application of physico-chemical analysis in heterogeneous systems for the solution of a series of problems of analytical chemistry. V. I. Kuznetsov reported on modern aims in the use of organic reagents; A. K. Babko showed at the example of halide and thiocyanate complexes the correlation between the stability of complexes and the position of the corresponding central atoms in the periodic system. V. M. Peshkova and V. M. Dochkova lectured on the stability of oximates of Cu, Co, and Ni as depending on the structure of the oxime molecule. V. V. Toropova lectured on the double character of reaction of some compounds in the formation of complexes. The problem of the application of heteropolyacids in analytical chemistry was dealt with in the lectures of Z. F. Shakhova and co-workers, and A. I. Kokorin and N. A. Polotebnova. A large number of lectures dealt with the use of new organic reagents in analysis: A. I. Busev and M. I. Ivanyutin reported on the application of dialkyl and diaryl dithio-phosphoric acid for the separation of elements, A. I. Portnov used aryl arsonic acid and aryl phosphinic acid. R. P. Lastovskiy and his co-workers treated some properties of new complexons. The lectures of V. A. Nazarenko, G. G. Shitareva and A. I. Kononenko dealt with the photometric determination of a series of elements using fluorine derivates. A. I. Cherkesov lectured on the use of halochromation in analytical chemistry. B. M. Dobkina and T. M. Malyutina lectured on the determination of tantalum using differential spectrophotometry. Yu. V. Morachevskiy and I. A. Stolyarova reported on new highly sensitive analysis methods using an ultraviolet microscope. Several lectures dealt with methodical and theoretical problems of spectrum analysis (N. F. Zakhariy and G. A. Sheynin; E. Ye. Yaynshteyn and co-workers). N. S. Poluektov and M. N. Nikonova treated the perfection of flame photometry. Several lectures dealt with the determination of elements by polarography (S. I. Sinyakova; Z. B. Rozhdestvenskaya and I. A. Yarovoy; Ya. P. Gokhshteyn). New results in using fixed electrodes were reported by I. D. Panchenko and Yu. S. Lyalikov and co-workers. The lecture of N. I. Udal'tsova and P. S. Paley treated the use of amperometric titration with two electrodes in the chemistry of uranium and thorium. M. M. Senyavin showed possibilities of predicting the conditions of chromatographic separation of elements based on their position in the periodic system. T. A. Belyavskaya reported on the use of ion exchange in the investigation of the state of substances in solutions. A. S. Vernidub and V. I. Petrashen' lectured on the chromatographic separation of a series of elements, N. G. Polyanskiy reported on adapting the properties of ion exchanger resins, F. M. Shemyakin and associates reported on the chromatographic proof of sulfanilamide preparations in liquids of the organism. G. L. Starobinets and associates treated the application of high polymers in chromatographic analysis. The lecture of A. A. Zhukhovitskiy and N. M. Turkel'taub, G. Shay dealt with gas chromatography. Several lectures treated the use of radioactive isotopes for the chromatographic investigation of complex formation (D. I. Ryabchikov and associates), for the investigation of the co-precipitation mechanism of ions of rare metals with sulfides (N. A. Rudnev) and for determining rare elements by means of isotope dilution (I. P. Alimarin, G. N. Bilimovich). In the field of elementary organic microanalysis the lectures of M. O. Karshan, N. E. Gel'man and V. A. Klimova with associates have to be mentioned, who treated the elaboration of rapid micromethods for the simultaneous determination of several elements from one weighed portion of boron, fluorine and silicium-organic compounds.

Card 1/4

Card 2/4

Card 3/4

APPROVED FOR RELEASE: 06/15/2000 CIA-RDP86-00513R001341820016-5"

"APPROVED FOR RELEASE: 06/15/2000 CIA-RDP86-00513R001341820016-5

POLOTEBNOVA, N.A.; LYALIKOVA, R.Yu.

Photocolorimetric determination of dionine. Apt. delo 10 no. 1:58-59 Ja-F '61. (MIRA 14:2)
(COLORIMETRY) (MORPHINE)

APPROVED FOR RELEASE: 06/15/2000 CIA-RDP86-00513R001341820016-5"

"APPROVED FOR RELEASE: 06/15/2000 CIA-RDP86-00513R001341820016-5

POLOTEBNOVA, N.A., dotsent; KRTIL, I.; RAVITSKAYA, F.Kh.; KRACHUN, S.V.

Heteropoly acids in the analysis of organic compounds.
Uch.zap.Kish.un. 68:71-78 '63 [cover '64].
(MIRA 18:12)

APPROVED FOR RELEASE: 06/15/2000 CIA-RDP86-00513R001341820016-5"

"APPROVED FOR RELEASE: 06/15/2000 CIA-RDP86-00513R001341820016-5

S/055/60/000/02/04/009

AUTHOR: Polosuyev, A.M.

TITLE: On a Problem of Uniform Distribution of a System of Functions

PERIODICAL: Vestnik Moskovskogo universiteta. Seriya I, matematika, mekhanika, 1960, No. 2, pp. 21-32

TEXT: The paper contains the detailed proof of the theorem announced by the author in (Ref.2) which asserts that the system $\alpha_1\lambda_1^x f_1(x),\ldots,\alpha_s\lambda_s^x f_s(x)$, where $f_i(x)$ are integral polynomials, λ_i - Pisot's numbers and α_i are specially constructed constants, is uniformly distributed modulo 1. There are 4 Soviet references.

ASSOCIATION: Kafedra teorii chisel (Department of Theory of Numbers)

SUBMITTED: June 18, 1959

Card 1/1

APPROVED FOR RELEASE: 06/15/2000 CIA-RDP86-00513R001341820016-5"

"APPROVED FOR RELEASE: 06/15/2000 CIA-RDP86-00513R001341820016-5

KOKORIN, A.I.; POLOTEBNOVA, N.A.

Heterotriacids. Part 6: Some properties of heterotriacids. Zhur. ob. khim. 27 no.2:304-310 F '57. (MLRA 10:6)

1. Kishinevskiy gosudarstvennyy universitet.
(Phosphomolybdic acids) (Silicomolybdic acids)

APPROVED FOR RELEASE: 06/15/2000 CIA-RDP86-00513R001341820016-5"

"APPROVED FOR RELEASE: 06/15/2000 CIA-RDP86-00513R001341820016-5

POLOTEBNOVA, T.U.

Producing large-boll forms of cotton through cross-pollination. Izv. AN Uz.SSR no.4:13-17 '56. (MIRA 14:5)
(Cotton breeding)

APPROVED FOR RELEASE: 06/15/2000 CIA-RDP86-00513R001341820016-5"

"APPROVED FOR RELEASE: 06/15/2000 CIA-RDP86-00513R001341820016-5

FOLOTENKOVA, N.A.

Selenotungstovanadic acid. Zhur. neorg. khim. 10 no.6:1498-1500 Je '64. (MIRA 18:6)

APPROVED FOR RELEASE: 06/15/2000 CIA-RDP86-00513R001341820016-5"

"APPROVED FOR RELEASE: 06/15/2000 CIA-RDP86-00513R001341820016-5

POLOTEYEV, I., master-povar.

Vegetables served separately. Obshchestv. pit. no.3:12 '57.
(Barnaul--Restaurants, lunchrooms, etc.) (MIRA 11:3)

APPROVED FOR RELEASE: 06/15/2000 CIA-RDP86-00513R001341820016-5"

"APPROVED FOR RELEASE: 06/15/2000 CIA-RDP86-00513R001341820016-5

AUTHORS: Agarov, A. I. and Polotnikov, V. V. 94-13-7-9/25

TITLE: Reconnection of a motor generator set to supply two electrolysis circuits (Pereklyucheniye dvigatel'-generatora na pitaniye dvukh tsepey elektroliza)

PERIODICAL: Promyshlennaya Energetika, 1958, Vol 13, Nr 7, pp 17-18 (USSR)

ABSTRACT: In an electrolytic copper factory some of the motor generators supplying electrolytic baths were lightly loaded; it was found possible to shut one set down and to operate two sets of baths on one generator. This effected considerable power economies. This suggestion was awarded a fifth premium in an All-Union Power Economy Competition.
There is one figure.

Card 1/1 1. Electrolysis - Circuits 2. Motor generators - Operation

APPROVED FOR RELEASE: 06/15/2000 CIA-RDP86-00513R001341820016-5"

"APPROVED FOR RELEASE: 06/15/2000 CIA-RDP86-00513R001341820016-5

REZNICHENKO, M.S., doktor biologicheskikh nauk, prof.; POLOTNOVA, L.I., nauchnyy sotrudnik

Structural changes of gliadin in wheat irradiated with gamma rays. Trudy VNIIZ no.38:123-127 '60. (MIRA 15:12)

1. Leningradskiy institut sovetskoy torgovli imeni F.Engel'sa.
(Gliadins) (Gamma rays)

APPROVED FOR RELEASE: 06/15/2000 CIA-RDP86-00513R001341820016-5"

"APPROVED FOR RELEASE: 06/15/2000 CIA-RDP86-00513R001341820016-5

POLOTNOVA, L. I.

The structure and chemical composition of prolamins. M. S. Reznichenko, V. M. Kolesov, L. I. Polotnova, and N. A. Chubachina. *Biochemistry* (U.S.S.R.) 21, 259-62 (1956)(English translation).—See C.A. 50, 157545.

B. M. R.

APPROVED FOR RELEASE: 06/15/2000 CIA-RDP86-00513R001341820016-5"

"APPROVED FOR RELEASE: 06/15/2000 CIA-RDP86-00513R001341820016-5

REZNICHENKO, M.S.; MOISEYEVA, V.P.; POLOTNOVA, L.I.; TUKACHINSKIY, S.Ye.

Some data on N-terminal groups in the gamma globulin of rabbits under normal and pathological conditions. Dokl. AN SSSR 124 no.6: 1339-1341 F '59. (MIRA 12:3)

1. Leningradskiy institut sovetskoy torgovli i Leningradskiy institut perelivaniya krovi. Predstavleno akademikom V.A. Engel'gardtom.
(GAMMA GLOBULIN) (X RAYS--PHYSIOLOGICAL EFFECT)

APPROVED FOR RELEASE: 06/15/2000 CIA-RDP86-00513R001341820016-5"

"APPROVED FOR RELEASE: 06/15/2000 CIA-RDP86-00513R001341820016-5

POLOTNOVA, L. I.

The structure and chemical composition of prolamins. M. S. Reznichenko, V. M. Kolesov, L. I. Polotnova, and N. A. Chubachina (F. Engels Inst. Soviet Trade, Leningrad). *Biokhimiya* 21, 258-61(1956).—By the method of partition paper chromatography the following amino acids were found in wheat gliadin: glycine, alanine, leucine, lysine, histidine, arginine, glutamic acid, cystine, proline, tyrosine, tryptophan, threonine, serine, phenylalanine, and valine. By the same method of hydrolysis and partition paper chromatography the same amino acids were found in gliadin of rye, but in different quantities. This was especially true of proline. B. S. Levine

4

APPROVED FOR RELEASE: 06/15/2000 CIA-RDP86-00513R001341820016-5"

"APPROVED FOR RELEASE: 06/15/2000 CIA-RDP86-00513R001341820016-5

POLOTNOV A, L. I.

3867. Structure and chemical composition of prolamines. Amino acid composition of gliadins. M. S. Reznichenko, V. M. Kolesov, L. I. Polotnova, and N. A. Cimbachina *Biokhimiia*, 1956, 21, 258–261, (Chair of Chem., Trade Inst., Leningrad, U.S.S.R.).—Paper chromatography of wheat gliadin indicated the presence of the following amino acids: glycine, alanine, leucine, lysine, histidine, arginine, glutamic acid, cystine, proline, tryosine, tryptophan, threonine, serine, phenylalanine, and valine. The last 4 have not been previously reported. The amino acid composition of rye gliadin is the same but the quant. relationships are different i.e. the amount of proline is lower. (Russian)

A. K. Grzybowski

4

APPROVED FOR RELEASE: 06/15/2000 CIA-RDP86-00513R001341820016-5"

"APPROVED FOR RELEASE: 06/15/2000 CIA-RDP86-00513R001341820016-5

17(3)

AUTHORS: Reznichenko, M. S., Moiseyeva, V. P., Polotnova, L. I., Tukachinskiy, S. Ye.

SOV/20-124-6-43/55

TITLE: Some Data on the N-End Groups of Rabbit Gamma Globulin Under Normal and Pathological Conditions (Nekotoryye dannyye ob N-konetsevykh gruppakh gamma-globulina krolika v norme i patologii)

PERIODICAL: Doklady Akademii nauk SSSR, 1959, Vol 124, Nr 6, pp 1339-1341 (USSR)

ABSTRACT: The detection of the nature of the protein end groups and, furthermore, the determination of the order of amino acid radicals in the polypeptide chains of protein molecules are most important to the explanation of the protein structure etc. The authors decided to investigate the influence of an X-ray treatment of the γ globulin in vivo in addition to the problem mentioned in the title. In all three rabbits (chinchilla race) an acute radiation disease with a severe leucopenia was caused by the action of 800 r. A γ globulin preparation of about 97% was produced from their blood. Dinitro phenol (DNPh) derivatives of globulin of normal and ill animals were chromatographed on paper in 2 fractions

Card 1/3

APPROVED FOR RELEASE: 06/15/2000 CIA-RDP86-00513R001341820016-5"

"APPROVED FOR RELEASE: 06/15/2000 CIA-RDP86-00513R001341820016-5

(ether- and water-soluble). Figure 1 gives the schemes of characteristic chromatograms on citrate-phosphorus buffer and phenol. Table 1 presents numerical results of the R_f of chromatogram spots and the test and standard substances. For γ globulin of normal animals N-end groups are characteristic further tyrosine and lysine radicals (citrate-phosphorus chromatograms) and finally radicals of aspartic and glutamic acid and serine which are likewise well pronounced (phenol chromatograms). The occurrence of N-end alanine can be proved only by comparison of its R_f and the R_f of the standard substance in 3 solvents. In ill animals the DNPh chromatograms show the lacking of DNPh tyrosine, but another spot instead (III. Fig 1), i.e. that of DNPh glycine (all 3 solvents). The table (not numbered, p 1340) gives the characteristics of the γ globulins of normal and ill animals determined in this way. These results are largely in accordance with the data hitherto published (Refs 8-10).

APPROVED FOR RELEASE: 06/15/2000 CIA-RDP86-00513R001341820016-5"

"APPROVED FOR RELEASE: 06/15/2000 CIA-RDP86-00513R001341820016-5

Some Data on the N-End Groups of Rabbit Gamma Globulin Under Normal and Pathological Conditions SOV/20-124-6-43/55

The tyrosine and lysine radicals found by the authors are added to the N-radicals of the γ globulin of normal rabbits, man and ox, which are already known. It may be assumed that the disappearance of end-tyrosine from the pathological γ globulin was due to an external radiation effect (Refs 11, 12). There are 1 figure, 2 tables, and 12 references, 5 of which are Soviet.

ASSOCIATION: Leningradskiy institut sovetskoy torgovli (Leningrad Institute of Soviet Trade)
Leningradskiy institut perelivaniya krovi (Leningrad Institute of Blood Transfusion)

PRESENTED: July 22, 1958, by V. A. Engel'gardt, Academician

SUBMITTED: July 20, 1958

Card 3/3

APPROVED FOR RELEASE: 06/15/2000 CIA-RDP86-00513R001341820016-5"

"APPROVED FOR RELEASE: 06/15/2000 CIA-RDP86-00513R001341820016-5

REZNICHENKO, M.S., POLOTNOVA, L.I., TSVETKOVA, Ye.V.

Nature of N-Terminal amino acid residues of wheat gliadin [with summary in English]. Biokhimiia 23 no.5:649-655 S-O '58 (MIRA 11:11)

1. Laboratoriya kafedry khimii Leningradskogo instituta sovetskoy torgovli.
(GLIADIN)
(AMINO ACIDS)

APPROVED FOR RELEASE: 06/15/2000 CIA-RDP86-00513R001341820016-5"

"APPROVED FOR RELEASE: 06/15/2000 CIA-RDP86-00513R001341820016-5

REZNICHENKO, M.S.; KOLESOV, V.M.; POLOTNOVA, L.I.; CHUBACHINA, N.A.

Investigations of the structure and chemical composition of prolamines. Amino acids of the gliadins of wheat and rye. Biokhimiia 21 no.2:258-261 Mr-Ap '56. (MLRA 9:8)

1. Kafedra khimii Leningradskogo instituta sovetskoy torgovli imeni Fr.Engel'sa.
(WHEAT) (RYE) (AMINO ACIDS) (GLIADIN)

APPROVED FOR RELEASE: 06/15/2000 CIA-RDP86-00513R001341820016-5"

"APPROVED FOR RELEASE: 06/15/2000 CIA-RDP86-00513R001341820016-5

REZNICHENKO, M.S., prof., doktor khim.nauk; MEL'TEVA, N.N., dots., kand.khim. nauk; POLOTNOVA, L.I., dots., kand.biol.nauk

Nature of N-terminal groups of the gliadin of wheat and zein of corn. [Trudy] VNIIZ no.35:85-103 '58. (MIRA 11:10)

1. Laboratoriya kafedry khimii Leningradskogo instituta sovetskoy torgovli.
(Zein) (Gliadin) (Amino acids)

APPROVED FOR RELEASE: 06/15/2000 CIA-RDP86-00513R001341820016-5"