"APPROVED FOR RELEASE: 06/15/2000 CIA-RDP86-00513R001341910005-7

POJER, J.; POLSTER, M.; ROHAN, P.; UHER, V.

Considerations on biochemistry of Mycobacterium tuberculosis. Lek. listy, Brno 6 no.24:745-749 15 Dec 51. (CIML 21:5)

1. Of the Institute of General and Experimental Pathology (Head—Prof. V. Uher, M.D.) of Masaryk University, Brno.

APPROVED FOR RELEASE: 06/15/2000 CIA-RDP86-00513R001341910005-7"

"APPROVED FOR RELEASE: 06/15/2000 CIA-RDP86-00513R001341910005-7

POLSTER, M.; HORACEK, J.

Relation of the structure of 2-chloro-4-nitrophenol to the fungicidity of pathogenic moulds. Cesk. derm. 26 no.9:371-379 Nov 51. (CIML 21:5)

1. Of the Institute of General and Experimental Pathology and of the Dermatological and Venereological Clinic of Masaryk University, Brno.

APPROVED FOR RELEASE: 06/15/2000 CIA-RDP86-00513R001341910005-7"

"APPROVED FOR RELEASE: 06/15/2000 CIA-RDP86-00513R001341910005-7

POLSTER, M

Disinfection of water by solid compounds of hydrogen peroxide. M. Polster and Z. Bo[illegible]k (Masaryk Univ., Br[illegible] Czech.). *Českoslov. hyg., epidemiol., mikrobiol., imunol.* 3, 201-5(1954).—Owing to difficulties met when using H_2O_2, addn. salts (I) of H_2O_2 with Na carbonate were tested. They caused min. denaturation of water, were easy to apply, and were not poisonous. However to achieve a perfect effect a comparatively large quantity of I and a long period of contact are necessary; the salts have limited stability. The efficiency of I is enhanced by Ag salts and its stability by silica gel. L. J. Urbánek

APPROVED FOR RELEASE: 06/15/2000 CIA-RDP86-00513R001341910005-7"

"APPROVED FOR RELEASE: 06/15/2000 CIA-RDP86-00513R001341910005-7

POLSTER, MIROSLAV

POLSTER, Miroslav, RNDr; BOCHORAK, Zdenek, PhMr

Sagen; a new disinfectant for minor water supply sources. Cesk. hyg. epidem. mikrob. 2 no.2:157-163 Apr '53.

1. Z hygienickeho ustavu lekarske fakulty v Brne.
(WATER SUPPLY,
disinfection with sagen)
(ANTISEPTICS,
sagen in water disinfection)

APPROVED FOR RELEASE: 06/15/2000 CIA-RDP86-00513R001341910005-7"

"APPROVED FOR RELEASE: 06/15/2000 CIA-RDP86-00513R001341910005-7

POLSTER, M.

POLSTER, M.; ROHAN, P.; SIMIKOVA, V.

Effect of iron on growth of Mycobacterium. Cesk. hyg. epidem. mikrob. 2 no.6:424-431 Dec. '53.

1. Z ustavu pro experimentalni pathologii lekarske fakulty MU v Brne. Prednosta: prof. MUDr et RNDr V Uher.

(MYCOBACTERIUM TUBERCULOSIS, effect of drugs on, iron on growth)
(MYCOBACTERIUM phlei, eff. of iron on growth)
(IRON, effects, on Mycobact. phlei & tuberc.)

APPROVED FOR RELEASE: 06/15/2000 CIA-RDP86-00513R001341910005-7"

"APPROVED FOR RELEASE: 06/15/2000 CIA-RDP86-00513R001341910005-7

POLSTER, M.

Chemical Abst.
Vol. 48 No. 8
Apr. 25, 1954
Biological Chemistry

(2)

Catalase in tubercle bacilli. M. Polster (Masaryk Univ., Brno). *Lékařské Listy* 8, 556-7(1953).—*p*-Aminosalicylic acid (PAS) and isonicotinic acid hydrazide (INH) form stable and insol. complexes with Fe and Cu. The tuberculostatic action of PAS and INH might be exercised through the complex formation between these compds. and Fe component of catalase, thus rendering the enzyme inactive. However, neither PAS, INH, salicylic acid, hydroxylamine-HCl, nor hydrazine hydrate, which were tested simultaneously, had any substantial effect on catalase activity in *Mycobacterium tuberculosis*. Oldrich Sebek

APPROVED FOR RELEASE: 06/15/2000 CIA-RDP86-00513R001341910005-7"

"APPROVED FOR RELEASE: 06/15/2000 CIA-RDP86-00513R001341910005-7

POLSTER, Miroslav, RNDr

Mechanism of action of fungicide p-nitrophenol derivative.
Cesk.derm. 29 no.3:184-186 Je '54.

1. Z mikrobiologickeho ustavu (prof. Dr V. Tomasek) a kozni kliniky (prof. Dr A.Tryb) lekarske fakulty v Brne.
(NITROPHENOLS, effects,
*p-nitrophenol deriv., fungicide)
(FUNGICIDES,
*p-nitrophenol deriv.)

APPROVED FOR RELEASE: 06/15/2000 CIA-RDP86-00513R001341910005-7"

"APPROVED FOR RELEASE: 06/15/2000 CIA-RDP86-00513R001341910005-7

POLSTER, MIROSLAV

Metabolism of *p*-aminosalicylic acid. Pavel Rohan and Miroslav Polster (Masaryk Univ., Brno, Czech.). *Biol. Listy* 32, 60-9(1951).—Urine of tuberculous patients treated with *p*-aminosalicylic acid (PAS), contained increased amts. of glucuronic acid and an oxidation product of either free PAS or its deriva., which was of nonquinoid character. Oldrich Sebek

APPROVED FOR RELEASE: 06/15/2000 CIA-RDP86-00513R001341910005-7"

"APPROVED FOR RELEASE: 06/15/2000 CIA-RDP86-00513R001341910005-7

POLSTER, M.

Chemotactic lipide substances of tubercle bacilli. Miroslav Polster (Masaryk. Univ., Brno, Czech.). *Lékařská listy* [illegible]-9(1952).—Review on histopathol. properties of different fractions from tubercle bacilli and evaluation of the action of phthloic acid derivs. 25 references.

L. J. Urbánek

APPROVED FOR RELEASE: 06/15/2000 CIA-RDP86-00513R001341910005-7"

"APPROVED FOR RELEASE: 06/15/2000 CIA-RDP86-00513R001341910005-7

Polster, M.

POLSTER, M.
SURNAME, Given Names

Country: Czechoslovakia

Academic Degrees:

Affiliation: Microbiological Institute of the Medical Faculty, Brno.

Source: Ceskoslovenska Hygiena (Journal of Hygiene), Vol V, No 9, Prague, Nov 1960, Page 556.

Data:

Author of "Bacteriological Diagnosis of Leukonostoc Mesenteroides in Lemonades," Source, Page 556.

Page 1 of 1 (2)

APPROVED FOR RELEASE: 06/15/2000 CIA-RDP86-00513R001341910005-7"

"APPROVED FOR RELEASE: 06/15/2000 CIA-RDP86-00513R001341910005-7

POLSTER, M.

Influence of iron on growth of mycobacteria. M. Polster, P. Rohan, and V. Šimíková (Masaryk Univ., Brno, Czech.). *Českoslov. hyg. epidemiol. mikrobiol. imunol.* 2, 424–31(1953).—The known stimulating growth effect of Fe on *Mycobacterium tuberculosis* was confirmed and moreover the significant growth effect of complexly bound Fe, both bivalent and trivalent, was proved. No such effect could be shown in *Mycobacterium phlei*. Phosphate exts. from both kinds of mycobacteria were unable to free Fe from the complex, ferro- and ferricyanide. The relationship of the complex binding of Fe to the action mechanism of some of the antituberculous substances is discussed.

L. J. Urbánek

APPROVED FOR RELEASE: 06/15/2000 CIA-RDP86-00513R001341910005-7"

"APPROVED FOR RELEASE: 06/15/2000 CIA-RDP86-00513R001341910005-7

POLSTER, M.

Tuberculostatic effect of complex-forming compounds. M. Polster (Masaryk Univ., Brno, Czech.). *Lékařské* ~~[illegible]~~ 1-5(1953).—The antibiotic activities of *o*-phenanthroline (I), 8-hydroxyquinoline, 4-aminosalicylic acid, phthalylhydroxamic acid, and phthalylhydroxylamine were tested in media with and without Fe. The greatest effect was observed with I. Its activity increased many times against tubercle bacteria in a medium contg. Fe in citrate form. The probable mechanism of action is discussed. L. J. Urbánek.

APPROVED FOR RELEASE: 06/15/2000 CIA-RDP86-00513R001341910005-7"

"APPROVED FOR RELEASE: 06/15/2000 CIA-RDP86-00513R001341910005-7

CZECHOSLOVAKIA / Pharmacology, Toxicology. Antiseptics. V

Abs Jour : Ref Zhur - Biologiya, No 6, 1959, No. 27899

Author : Polster, Miroslav
Inst : Not given
Title : Mechanism of Antifungicidal Action of n-Nitrophenole Derivatives. II

Orig Pub : Ceskosl. dermatol., 1957, 32, No 3, 134-136

Abstract : No abstract given

Card 1/1

APPROVED FOR RELEASE: 06/15/2000 CIA-RDP86-00513R001341910005-7"

"APPROVED FOR RELEASE: 06/15/2000 CIA-RDP86-00513R001341910005-7

POLSTYANAYA, A.V.

Influence of a transfusion of protein hydrolysate on liver function in surgical patients. Probl.gemat.i perel.krovi no.9: 45-51 '61. (MIRA 14:9)

1. Iz khirurgicheskoy kliniki (zav. - prof.D.M. Grozdov) TSentral'nogo ordena Lenina instituta gematologii i perelivaniya krovi (dir. - deystvitel'nyy chlen AMN SSSR prof. A.A. Bagadasarov) Ministerstva zdravookhraneniya SSSR.
(BLOOD PLASMA SUBSTITUTES) (LIVER)

APPROVED FOR RELEASE: 06/15/2000 CIA-RDP86-00513R001341910005-7"

"APPROVED FOR RELEASE: 06/15/2000 CIA-RDP86-00513R001341910005-7

POLSTYANKO, L. L.

7

Study of the structure of chelates by their infrared and ultraviolet spectra. M. L. Polstyanko, L. A. Kazitsyna, and A. P. Terent'ev (M. V. Lomonosov State Univ., Moscow). *Khim. Nauka i Prom.* 2, 797-8(1957).—Chelates were prepd. by Pfeifer's method (*C.A.* 34, 87[1]) from Schiff bases and salts of Cu, Ni, Pd, Be, Zn, and Cd or from a metal, salicylaldehyde and the corresponding amines. Two types of spectra were obtained. The Ni and Cu salicylaldehyde amine (I) and the ethylenediamine analog (II) exhibited 2 peaks at 275 and 355 mμ. Available data on x-ray patterns (Cox, *et al.*, *C.A.* 30, 2514[7]) and magnetic susceptibility (Calvin, *et al.*, *C.A.* 41, 858*e*) indicate that II has a cis structure. Ni and Cu salicylaldehyde methyl- and butylamines and hexamethylenediamine exhibited an addnl. peak at 300 mμ. These are trans compds. The infrared spectra of I passed through 1 peak at 3300 cm.$^{-1}$ confirming the trans structure. X-ray studies of the Ni chelate indicate a trans structure. The spectra of Be, Zn, and Cd chelates were similar to each other and are probably tetrahedral complexes.

I. Bencowitz

Distr: 4E4j/4E3d

APPROVED FOR RELEASE: 06/15/2000 CIA-RDP86-00513R001341910005-7"

"APPROVED FOR RELEASE: 06/15/2000 CIA-RDP86-00513R001341910005-7

5 (3,4)

AUTHORS: Kazitsyna, L. A., Lokshin, B. V., Polstyanko, L. L., Terent'yev, A. P. SOV/55-58-6-26/31

TITLE: Infrared Spectra of Several Inner-complex Compounds in the Field of the Valency Oscillations of N-H (Infrakrasnyye spektry nekotorykh vnutrikompleksnykh soyedineniy v oblasti valentnykh kolebaniy N-H)

PERIODICAL: Vestnik Moskovskogo universiteta. Seriya matematiki, mekhaniki, astronomii, fiziki, khimii, 1958, Nr 6, pp 207 - 213 (USSR)

ABSTRACT: The object of this article is the investigation of the structure of the inner-complex compounds of the quadri-coordinated metals (Cu, Ni, Pd, Be, Zn, Cd) in which a successive modification of the electronic shell takes place. These metals are capable of forming tetraedric or even (in this case cis- and transisomers) complexes. The examination was carried out by means of infrared-absorption spectra. These spectra permit a determination concerning the existence of the transisomers, as with the latter the symmetrical oscillations are not active in the infrared spectrum owing to the absence of a change of the bipolar moment. In order to draw conclusions as to the even cis-shape or the tetraedric shape, further tests are re-

Card 1/3

APPROVED FOR RELEASE: 06/15/2000 CIA-RDP86-00513R001341910005-7"

"APPROVED FOR RELEASE: 06/15/2000 CIA-RDP86-00513R001341910005-7

quired. In the present paper the authors restricted their investigations to the possibility of determining the even trans--configuration. Infrared spectra were taken of a number of compounds containing the atomic group of HN-Me-NH. The authors tried to find out the configuration, taking into account the absorption bands in the field of the valency oscillations of the N-H bond. The following compounds were investigated: Cu,Ni, Pd,Cd,Be, iminates of salicyl aldehyde, the acetyl-acetone iminates of Cu, Ni, Pd, the o-oxyacetophenone iminates of Cu and Ni, the β-oxynaphtaldehyde-iminates of Cu and Ni and the copper salts of the ethylene-bis-α-iminopropione- and of the α-phenyl acetic acid. The experimental part contains a short description of the syntheses of the various complex compounds; the outward form and the contents of nitrogen and copper are shown in table 1. In figure 1 the spectra of those compounds are shown whose X-ray structural analysis and magnetic measurements seemed to point to a trans-structure. Figure 2 refers to the spectra of the Cd and Be salicylal iminates which are of tetraedric structure, and to the spectra of the last--mentioned compounds, which - owing to the presence of an

APPROVED FOR RELEASE: 06/15/2000 CIA-RDP86-00513R001341910005-7"

"APPROVED FOR RELEASE: 06/15/2000 CIA-RDP86-00513R001341910005-7

Infrared Spectra of Several Inner-complex Compounds SOV/55-58-6-26/31
in the Field of the Valency Oscillations of N-H

ethylene-bridge - show an even Cis-configuration. Table 2 is a compilation of all results, characterizing the absorption of the compounds investigated in the field of the N-H-binding valency oscillations. The data obtained permit the following conclusions to be drawn: the composite bands of the cis- and trans--configuration are generated under the influence of the crystal lattice. If in the field of the valency oscillations but one band becomes clearly visible, this is considered as a proof that there is an even trans-configuration. If in solutions this one band remains unchanged in spite of another scission, then the existence of this band is only a proof for an even trans--figuration, if the solvent does not exercise any influence on the interaction between the metal-atom and the donor atoms. There are 2 figures, 2 tables, and 8 references, 2 of which are Soviet.

ASSOCIATION: Kafedra organicheskoy khimii (Chair for Organic Chemistry)

SUBMITTED: July 25, 1958

Card 3/3

APPROVED FOR RELEASE: 06/15/2000 CIA-RDP86-00513R001341910005-7"

"APPROVED FOR RELEASE: 06/15/2000 CIA-RDP86-00513R001341910005-7

SOV/48-23-10-10/39

24(7)-7(3)

AUTHORS: Kazitsyna, L. A., Lokshin, B. V., Polstyanko, L. L., Terent'yev, A.P.

TITLE: The Infrared Spectra of Some Innercomplex Compounds Within the Range of NH-Valence Oscillations

PERIODICAL: Izvestiya Akademii nauk SSSR. Seriya fizicheskaya, 1959, Vol 23, Nr 10, pp 1196-1198 (USSR)

ABSTRACT: The authors investigated a number of innercomplex metal compounds (coordinate number 4) by means of infrared spectra within the range 3000 - 3500 cm^{-1} and determined the NH-valence oscillation frequency in the formations

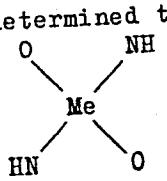

and

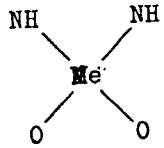

The formulas for the structure of the investigated compounds are given (Me denotes the metal). The substance to be investigated was prepared as vaseline paste; measurements were carried out by using a spectrophotometer of the type IKS-11. The results are shown by a table. Figures 1 - 3 show the characteristic shape of the spectra of three compounds. The data given by the table are

Card 1/2

APPROVED FOR RELEASE: 06/15/2000 CIA-RDP86-00513R001341910005-7"

"APPROVED FOR RELEASE: 06/15/2000 CIA-RDP86-00513R001341910005-7

then discussed. One or several bands may occur in the spectrum. If one band occurs in the spectrum of an innercomplex compound containing an NH-group in connection with NH-valence oscillations, this may be considered to prove the existence of a plane trans-structure of the complex. The non-existence of a splitting-up in the spectra of solutions and the occurrence of only one band may be considered to prove the existence of a trans-structure only if the solvent exercises no essential influence upon the interaction between the metal and the donor atoms. There are 3 figures, 1 table, and 4 references, 1 of which is Soviet.

APPROVED FOR RELEASE: 06/15/2000 CIA-RDP86-00513R001341910005-7"

"APPROVED FOR RELEASE: 06/15/2000 CIA-RDP86-00513R001341910005-7

5(3,4) SOV/20-125-4-32/74

AUTHORS: Kazitsyna, L. A., Polstyanko, L. L., Kupletskaya, N. B., Ignatovich, T. N., Terent'yev, A.P., Corresponding Member AS USSR

TITLE: Investigation of the Absorption Spectra of the Alkylimines of o-Oxycarbonyl Compounds (Issledovaniye spektrov pogloshcheniya alkiliminov o-oksikarbonil'nykh soyedineniy)

PERIODICAL: Doklady Akademii nauk SSSR, 1959, Vol 125, Nr 4, pp 807-810 (USSR)

ABSTRACT: For the purpose of determining the type of bond between metal and the donor atoms in the inner-complex compounds the comparison of the spectra of the initial addenda and the formed inner-complex compounds is used. The maintenance of the spectral character of the addendum in an inner-complex compound gives evidence of a formation of an "ionic" bond: a decisive change of the type of spectrum in the produced complex, however points out to the formation of a covalent bond between metal and donor atoms (Ref 1). In the former case it is possible to determine the strength of the forming bond (Ref 2) by the degree of shift of the bands of the inner-complex compound. The authors investigated the spectra of inner-complex compounds of addenda

Card 1/4

APPROVED FOR RELEASE: 06/15/2000 CIA-RDP86-00513R001341910005-7"

"APPROVED FOR RELEASE: 06/15/2000 CIA-RDP86-00513R001341910005-7

as acetyl acetone, salicylaldehyde, o-oxyacetophenone, β-oxynaphthaldehyde and their alkylimines (Ref 3). All mentioned compounds form hydrogen bonds of different type and strength. In order to determine the initially mentioned changes in the spectrum which are due to the formation of a hydrogen bond, the electron spectra were investigated in different solvents. It was found that in addenda containing only hydrogen as donor atoms the hydrogen bond does not cause a remarkable variation of the spectrum character: only some main bonds are shifted in the direction of the long waves. However, in addenda as alkylimines of salicylaldehyde and o-oxyacetophenone a new bond appears within the range of 25000 cm^{-1}. Its occurrence and intensity are determined by the used solvents. In inert solvents (isooctane, carbon tetrachloride) the spectra of alkylimines are similar to those of oxygen compounds not only with respect to their character but also with respect to the position of the absorption bonds. In this case the hydrogen bond appears also as a shift of the main bands by 1500-2000 cm^{-1} in the red direction (Table 1). There is a great difference

APPROVED FOR RELEASE: 06/15/2000 CIA-RDP86-00513R001341910005-7"

"APPROVED FOR RELEASE: 06/15/2000 CIA-RDP86-00513R001341910005-7

between the spectra of the two last mentioned alkylimines in polar solvents and those in inert solvents, and thus there is also a considerable difference between them and the spectra of oxygen compounds. The above investigation shows that a direct comparison of the spectra of such addenda as alkylimines of salicylaldehyde and o-oxyacetophenone with the spectra of the inner-complex compounds produced from them is permissible if spectra in polar solvents are concerned. As the inner-complex compounds of these two substances are as a rule not soluble in inert solvents and as it is necessary to take their spectra in chloroform and alcohol for the purpose of determining the form of bond it is advisable to make use of the comparison between alkylimines and spectra in not polar substances. In the case of "ionic" compounds it is of advantage to determine in not polar solvents the relative strength as a function of the spectrum of the methyl ester of the addendum concerned, i. e. as a function of such a spectrum that is not changed under the action of inner- or intramolecular interactions. There are 3 figures, 2 tables, and 5 references, 1(2) of which are Soviet.

APPROVED FOR RELEASE: 06/15/2000 CIA-RDP86-00513R001341910005-7"

"APPROVED FOR RELEASE: 06/15/2000 CIA-RDP86-00513R001341910005-7

KAZITSYNA, L.A.; KUPLETSKAYA, N.B.; POLSTYANKO, L.L.; KIKOT', B.S.; KOLESNIK, Yu.A.; TERENT'YEV, A.P.

Ultraviolet absorption spectra of alkyl imines of acetylacetone and β-hydroxynaphthaldehyde. Zhur. ob. khim. 31 no.1:313-323 Ja '61. (MIRA 14:1)

1. Moskovskiy gosudarstvennyy universitet.
(Naphthaldehyde) (Acetone)
(Imines—Spectra)

APPROVED FOR RELEASE: 06/15/2000 CIA-RDP86-00513R001341910005-7"

"APPROVED FOR RELEASE: 06/15/2000 CIA-RDP86-00513R001341910005-7

L 1125-66 EWT(m)/T

ACCESSION NR: AP5022938 UR/0062/65/000/008/1500/1502
541.183+546.284

AUTHOR: Dubinin, M. M.; Zhukovskaya, Ye. G.; Luk'yanovich, V. M.; Murdmaa, K. O.; Polstyanov, Ye. F.; Senderov, E. E.

TITLE: Adsorption volumes of synthetic mordenites

SOURCE: AN SSSR. Izvestiya. Seriya khimicheskaya, no. 8, 1965, 1500-1502

TOPIC TAGS: molecular sieve, synthetic zeolite, mordenite

ABSTRACT: Adsorption (pore) volumes of sodium and hydrogen forms of synthetic mordenite were determined in order to check them against the corresponding values calculated on the basis of X-ray analysis. For comparison, also H-Zeolon (product of Norton Company) was examined. The saturation volumes of Na and H synthetic mordenites were determined from water vapor isotherm at 20°C, nitrogen and argon isotherms taken at -196°C, and from sorption and desorption isotherms for benzene taken at 20°C and various pressures. For all mordenites an excellent agreement was found between the calculated pore volumes and the values obtained from water vapor, nitrogen, and argon adsorption measurements, while benzene adsorption gave values for the pore volumes that were too low. This was due to the fact that the small cavities in the

Card 1/2

APPROVED FOR RELEASE: 06/15/2000 CIA-RDP86-00513R001341910005-7"

"APPROVED FOR RELEASE: 06/15/2000 CIA-RDP86-00513R001341910005-7

L 1125-66

ACCESSION NR: AP5022938

6

mordenite tube-like channels were inaccessible to benzene. It was concluded that only the channels with openings made of oxygen rings containing 12 atoms are accessible to benzene. Orig. art. has: 2 figures, 2 tables.

44,55

ASSOCIATION: Institut fizicheskoy khimii Akademii nauk SSSR (Institute of Physical Chemistry, Academy of Sciences, SSSR); Institut geokhimii i analiticheskoy khimii im. V. I. Bernadskogo Akademii nauk SSSR (Institute of Geochemistry and Analytical Chemistry, Academy of Sciences, SSSR)

44,55

SUBMITTED: 17Dec64 ENCL: 00 SUB CODE: MT, GC

NO REF SOV: 004 OTHER: 003

Card 2/2

APPROVED FOR RELEASE: 06/15/2000 CIA-RDP86-00513R001341910005-7"

"APPROVED FOR RELEASE: 06/15/2000 CIA-RDP86-00513R001341910005-7

DUBININ, M. M.; ZHUKOVSKAYA, Ye. G.; MURDMAA, K. O.; POLSTYANOV, Ye. F.

Adsorption properties and the secondary porous structure of adsorbents having molecular-sieve action. Report No. 7: Volumes of the cavities of dehydrated crystals of synthetic zeolites of the types A and X filled up during absorption of the vapors of various substances. Izv. AN SSSR Otd. khim. nauk no.12:2113-2121 D '62. (MIRA 16:1)

1. Institut fizicheskoy khimii AN SSSR.

(Zeolites) (Adsorption)

APPROVED FOR RELEASE: 06/15/2000 CIA-RDP86-00513R001341910005-7"

"APPROVED FOR RELEASE: 06/15/2000 CIA-RDP86-00513R001341910005-7

S/062/62/000/012/001/007
B101/B186

AUTHORS: Dubinin, M. M., Zhukovskaya, Ye. G., Murdmaa, K. O., and Polstyanov, Ye. F.

TITLE: Study on adsorption properties and secondary pore structures of adsorbents with a molecular sieve effect. Communication VII. Volumes of the cavities of dehydrated crystals of synthetic A and X zeolites, which are filled by vapor adsorption of various substances

PERIODICAL: Akademiya nauk SSSR. Izvestiya. Otdeleniye khimicheskikh nauk, no. 12, 1962, 2113-2121

TEXT: The isothermal lines of the sorption of water at 20°C, nitrogen at -195°C, and benzene at 20°C were plotted for NaA, CaA, NaX, and CaX zeolites to determine the characteristic adsorption values. The adsorption volumes were determined: (1) by calculation from the isothermal equation (Izv. AN SSSR, Otd. khim. n., 1958, 1165), developed on the basis of the potential theory of adsorption; (2) by determining graphically the characteristic equilibrium pressure h_o for each vapor before capillary

Card 1/3

APPROVED FOR RELEASE: 06/15/2000 CIA-RDP86-00513R001341910005-7"

"APPROVED FOR RELEASE: 06/15/2000 CIA-RDP86-00513R001341910005-7

condensation sets in. The values (v^o) obtained in two different ways were consistent (in cm^3/g): with H_2O at 20°C 0.269 - 0.272 for NaA, 0.279-0.283 for CaA, 0.323 - 0.338 for NaX, 0.355 - 0.360 for CaX; with H_2 at -195°C 0.287 for CaA, 0.336 - 0.340 for NaX, 0.349 - 0.350 for CaX, and with C_6H_6 at 20°C 0.293 - 0.297 for NaX, and 0.300 - 0.301 for CaX. Calculation of the number n of unit cells with the composition $z[yNa_2O\cdot(1 - y)H_2O\cdot Al_2O_3\cdot xSiO_2]$ and the molecular weight M per unit weight of the zeolite crystal gave: for NaA:x = 2.06, y = 0.93, z = 5.91, M = 1683, $n\cdot10^{-20}/g$ = 3.58; for CaA:x = 2.06, y = 0.93, z = 5.91, M = 1654, $n\cdot10^{-20}/g$ = 3.64; for NaX:x = 2.96, y = 0.964, z = 38.71, M = 13171, $n\cdot10^{-20}/g$ = 0.457; for CaX:x = 2.96, y = 0.964, z = 38.71, M = 12950, $n\cdot10^{-20}/g$ = 0.465. The volume of the cavities filled during maximum adsorption, calculated from $v_c = v^o/n$, has the following values:

APPROVED FOR RELEASE: 06/15/2000 CIA-RDP86-00513R001341910005-7"

"APPROVED FOR RELEASE: 06/15/2000 CIA-RDP86-00513R001341910005-7

DUBININ, M.M.; ZHDANOV, S.P.; ZHUKOVSKAYA, Ye.G.; MURDMAA, K.O.; POLSTYANOV, Ye.F.; SAKAVOV, I.Ye.; SHISHAKOV, N.A.;

Adsorption properties and the secondary porous structure of adsorbents having molecular sieve action. Report No.9: Parameters of elementary crystalline cells and the limiting adsorptive volumes of A-type synthetic zeolites. Izv.AN SSSR.Ser.khim. no.9:1565-1573 S '64. (MIRA 17:10)

Adsorption properties and the secondary porous structure of adsorbents having molecular sieve action. Report No.10: Composition, adsorptive properties, and the limiting adsorptive volumes of X-type synthetic zeolites. Ibid.:1573-1580

1. Institut fizicheskoy khimii AN SSSR i Institut khimii silikatov AN SSSR.

APPROVED FOR RELEASE: 06/15/2000 CIA-RDP86-00513R001341910005-7"

"APPROVED FOR RELEASE: 06/15/2000 CIA-RDP86-00513R001341910005-7

L 20364-66 EWT(1)/EWT(m)/T

ACC NR: AP6012076 SOURCE CODE: UR/0062/65/000/010/1731/1740

AUTHOR: Dubinin, M. M.; Berezkina, Yu. F.; Polstyanov, Ye. F.; Ryabikova, Z. A.; Sarakhov, A. I.

ORG: Institute of Physical Chemistry, AN SSSR (Institut fizicheskoy khimii AN SSSR)

TITLE: Study of the adsorption properties and secondary porous structure of adsorbents having molecular-sieve action. Report 11. Specific surface of secondary pores of molded synthetic zeolites, type A

SOURCE: AN SSSR. Izvestiya. Seriya khimicheskaya, no. 10, 1965, 1731-1740

TOPIC TAGS: adsorption, zeolite, porosity, molecular sieve

ABSTRACT: The analysis of the physical content of various methods of determining the specific surface of the secondary pores of formed zeolites is presented. The specific surface of secondary pores of an equivalent sorbent model with an accepted geometric form of the pores can be calculated from experiments on the depression of mercury and the capillary condensation of benzene. By using a highly sensitive weight adsorption device the specific surfaces, close to actual, of secondary pores of formed Type A zeolites and external surfaces of the zeolite crystals contained in them are determined. The specific surfaces of the secondary pores of the formed zeolites are determined mainly by the porous structure of additives of the binding substances. The specific surfaces of the secondary pores for equivalent porus sor-

Card 1/2 UDC: 541.18+661.183

APPROVED FOR RELEASE: 06/15/2000 CIA-RDP86-00513R001341910005-7"

"APPROVED FOR RELEASE: 06/15/2000 CIA-RDP86-00513R001341910005-7

L 20364-66

ACC NR: AP6012076

3

bent models as a rule are considerably greater than the actual specific surfaces of the secondary pores of real formed zeolites. Hence methods of depression of mercury and capillary condensation of vapors cannot serve as any accurate estimation of the specific surfaces of secondary pores of the formed zeolites. The authors thank B. A. Lipkind, T. G. Plachenov and Ya. V. Mirskiy for making available for research the samples of crystalline and formed zeolites. Orig. art. has: 6 figures, 7 formulas, and 3 tables. [JPRS]

SUB CODE: 07, 11 / SUBM DATE: 17Jul63 / ORIG REF: 012 / OTH REF: 001

Card 2/2 vmb

APPROVED FOR RELEASE: 06/15/2000 CIA-RDP86-00513R001341910005-7"

"APPROVED FOR RELEASE: 06/15/2000 CIA-RDP86-00513R001341910005-7

L 16293-65 EWT(m)/T Pb-4

ACCESSION NR: AP4045793 S/0062/64/000/009/1565/1573

AUTHOR: Dubinin, M. M.; Zhdanov, S. P.; Zhukovskaya, Ye. G.; Murdmaa, K. O.; Polstyanov, Ye. F.; Sakavov, I. Ye.; Shishakov, N. A.

TITLE: Investigation of the adsorption properties and secondary porous structure of adsorbents having molecular sieve functions. Communication 9. Parameters of the elementary crystal cells and adsorption capacity of synthetic type A zeolites

SOURCE: AN SSSR. Izv. Seriya khimicheskaya, no. 9, 1964, 1565-1573

TOPIC TAGS: adsorptive property, secondary porous structure, adsorbent, molecular sieve, elementary crystal cell parameter

ABSTRACT: Experimental data was obtained and calculations were made to evaluate the effect of the a_0A parameters of the cubic elementary crystal cells on the volume of the major cavities and on the adsorption capacity of type A zeolite crystals and to attempt to explain the role of the minor cavities in water adsorption by zeolites of this type. In calculating the volume of the major cavities

Card 1/3

APPROVED FOR RELEASE: 06/15/2000 CIA-RDP86-00513R001341910005-7"

"APPROVED FOR RELEASE: 06/15/2000 CIA-RDP86-00513R001341910005-7

L 16293-65
ACCESSION NR: AP4045793

of type A zeolites, based on x-ray structural data, it was necessary to take into account the parameters of the elementary crystal cells (a_{oA}). The following relationships were found to be quite accurate for obtaining values for the volume of the major cavity: $V_{mA}=200.0a_{oA} - 1688Å^3$, or $V_{mA} = 417.9a_{oA} - 4373Å^3$. Thus the calculated volume and the experimental adsorption capacity increased noticeably as the elementary crystal cell parameter increased. Experimental data on the equilibrium adsorption of water by NaA crystalline zeolites at 20-100C and equilibrium relative pressures of $5x10^{-1} - 2x10^{-1}$ fully confirm the potential theory of adsorption. Approximately 24 water molecules were adsorbed in a major cell of the type A zeolite. Based on its geometry, a minor cavity could contain 2-3 water molecules, but based on experimental data, adsorption of water in previously dehydrated crystals of NaA zeolite takes place only in the major cavity. Thus the role of the minor cavities in water adsorption is still to be established. "The authors thank Ye. N. Yegorov for chemical analysis of the zeolite samples and N. G. Y'ko for conducting individual experiments." Orig. art. has: 7 tables, 2 figures, and 5 equations.

Card 2/3

APPROVED FOR RELEASE: 06/15/2000 CIA-RDP86-00513R001341910005-7"

"APPROVED FOR RELEASE: 06/15/2000 CIA-RDP86-00513R001341910005-7

L 16293-65

ACCESSION NR: AP4045793

2

ASSOCIATION: Institut fizicheskoy khimii Akademii nauk SSSR (Institute of Physical Chemistry Academy of Sciences SSSR); Institut khimii silikatov Akademii nauk SSSR (Institute of Silicate Chemistry Academy of Sciences SSSR)

SUBMITTED: 29Dec62 ENCL: 00

SUB CODE: GC NO REF SOV: 004 OTHER: 004

Card 3/3

APPROVED FOR RELEASE: 06/15/2000 CIA-RDP86-00513R001341910005-7"

"APPROVED FOR RELEASE: 06/15/2000 CIA-RDP86-00513R001341910005-7

ACC NR: AP7013132

SOURCE CODE: UR/0062/66/000/009/1507/1513

AUTHOR: Dubinin, M. M.; Polstyanov, Ye. F.

ORG: Institute of Physical Chemistry, AN SSSR (Institut fizicheskoy khimii, AN SSSR)

TITLE: Adsorption properties of carbon adsorbents. Communication 8. Isosteres and isosteric heats of adsorption of vapors on activated charcoals with various microporous structures

SOURCE: AN SSSR. Izvestiya. Seriya khimicheskaya, no. 9, 1966, 1507-1513

TOPIC TAGS: heat of activation, activated carbon

SUB CODE: 07

ABSTRACT: The adsorption isoteres and isosteric differential heats of adsorption of benzene, cyclohexane, and pyridine vapors on activated charcoals were analyzed. In the case of equilibrium adsorption of vapors on activated charcoals, the adsorption isosteres are expressed with a high degree of accuracy as straight lines for a broad range of fillings of the volume of the adsorption space. The curves of the differential heats of adsorption as a function of the parameters of the microporous structure of the activated charcoal and nature of the substance to be adsorbed were analyzed. In the case of adsorption due chiefly to a dispersion interaction, the ratios of the differential heats of

Card 1/2

UDC: 541.183

0933 0825

APPROVED FOR RELEASE: 06/15/2000 CIA-RDP86-00513R001341910005-7"

"APPROVED FOR RELEASE: 06/15/2000 CIA-RDP86-00513R001341910005-7

ACC NR: AP7013132

adsorption to the heats of condensation for the investigated vapors are practically constant within a broad range of filling of the volume of the adsorption space. The differential heats of adsorption calculated according to the adsorption equation are in satisfactory agreement with the heats determined according to the adsorption isosteres, the discrepancies not exceeding 5%. Orig. art. has: 9 figures, 15 formulas and 1 table. [JPRS: 40,422]

Card 2/2

APPROVED FOR RELEASE: 06/15/2000 CIA-RDP86-00513R001341910005-7"

"APPROVED FOR RELEASE: 06/15/2000 CIA-RDP86-00513R001341910005-7

L 16157-65 EWT(m)/T Pb-4 SSD/AFWL/AS(mp)-2
ACCESSION NR: AP4045794 S/0062/64/000/009/1573/1580

AUTHOR: Dubinin, M. M.; Zhdanov, S. P.; Zhukovskaya, Ye. G.; Murdmaa, K. O.; Polstyanov, Ye. F.; Sakavov, I. Ye.; Shishakov, N. A.

TITLE: Investigation of the adsorption properties and the secondary porous structure of adsorbents functioning as molecular sieves. Communication 10. Composition, adsorption properties and limiting adsorption volume of type X synthetic zeolites

SOURCE: AN SSSR. Izv. Seriya khimicheskaya, no. 9, 1964, 1573-1580

TOPIC TAGS: type X zeolite, synthetic zeolite, adsorption, porous structure, molecular sieve, isomorphic substitution, elementary cell parameter, adsorption isotherm

ABSTRACT: The effect of varying compositions of the alumosilicate skeleton of type X synthetic zeolites on the volume of the major cavities and the adsorption properties of the zeolites was determined. In the type X zeolites the SiO_2/Al_2O_3 ratio (x) may be varied from 2.2 to 3.3 due to the isomorphic substitution of the

Card 1/3

APPROVED FOR RELEASE: 06/15/2000 CIA-RDP86-00513R001341910005-7"

"APPROVED FOR RELEASE: 06/15/2000 CIA-RDP86-00513R001341910005-7

L 16157-65
ACCESSION NR: AP4045794

3

Al ions by Si ions. The parameter of the cubic elementary crystal cell was determined from x-ray data; the radius of the structural unit corresponded to the relationship $r_x = 6.406 - 0.060(x-2.00)$, with x varied from 2.2 to 3.3. Thus the volume of the major cavity decreased as the zeolite was enriched in Si, but the number of elementary cells per unit mass of dehydrated zeolite increased. The volume of the major cavities per unit mass of crystals was practically independent of the zeolite composition. The adsorption isotherms and the limiting adsorption volumes for NaX zeolites were determined for water, benzene, n-pentane, cyclohexane and pyridine at 20C and for nitrogen at -196C. The limiting adsorption volume of the zeolites for H_2O and N_2 was also practically independent of the NaX zeolite composition, and corresponded to the calculated values of the major cavities. Under low equilibrium pressures the adsorption of the dipolar and quadrupolar molecules (water and nitrogen) decreased proportionally to the enrichment of the NaX zeolite with Si; this was attributed to the decreasing number of ion exchange cationites in the cavities due to substitution of Si for NaAl in the alumosilicate skeleton. "The authors thank Ye. N. Yegorov for chemical analysis of the zeolites. B. A. Lipkind for supplying zeolite sample and N. G. Ul'ko for

Card 2/3

APPROVED FOR RELEASE: 06/15/2000 CIA-RDP86-00513R001341910005-7"

"APPROVED FOR RELEASE: 06/15/2000 CIA-RDP86-00513R001341910005-7

L 16157-65
ACCESSION NR: AP4045794

2

conducting individual tests. Orig. art. has: 5 tables, 2 figures and 4 equations

ASSOCIATION: Institut fizicheskoy khimii Akademii nauk SSSR (Institute of Physical Chemistry Academy of Sciences SSSR); Institut khimii silikatov Akademii nauk SSSR (Institute of Silicate Chemistry Academy of Sciences SSSR)

SUBMITTED: 29Dec62 ENCL: 00

SUB CODE: GC, GP NO REF SOV: 006 OTHER: 000

Card 3/3

APPROVED FOR RELEASE: 06/15/2000 CIA-RDP86-00513R001341910005-7"

"APPROVED FOR RELEASE: 06/15/2000 CIA-RDP86-00513R001341910005-7

DUBININ, M.M.; ZHUKOVSKAYA, Ye.G.; LUK'YANOVICH, V.M.; MURDMAA, K.O.; POLSTYANOV, Ye.F.; SENDEROV, E.E.

Adsorption volumes of synthetic mordenites. Izv. AN SSSR. Ser. khim. no.8:1500-1502 '65. (MIRA 18:9)

1. Institut fizicheskoy khimii AN SSSR i Institut geokhimii i analiticheskoy khimii im. V.I. Vernadskogo AN SSSR.

APPROVED FOR RELEASE: 06/15/2000 CIA-RDP86-00513R001341910005-7"

"APPROVED FOR RELEASE: 06/15/2000 CIA-RDP86-00513R001341910005-7

DUBININ, M.M.; BEREZKINA, Yu.F.; POLSTYANOV, Ye.F.; RYABIY VA, Z.A.; SARAKHOV, A.I.

Adsorption properties and the secondary porous structure of adsorbents having molecular-sieve action. Report No.11: Specific surface of secondary pores of molded type-A synthetic zeolites. Izv. AN SSSR.Ser.khim. no.10:1731-1740 '65. (MIRA 18:10)

1. Institut fizicheskoy khimii AN SSSR.

APPROVED FOR RELEASE: 06/15/2000 CIA-RDP86-00513R001341910005-7"

"APPROVED FOR RELEASE: 06/15/2000 CIA-RDP86-00513R001341910005-7

PUSTYNNOV, G. N.

BEYLINA, TS.O., inzhener; BLAGONADEZHDIN, V.Ye., inzhener; BOGUSLAVSKIY, P.Ye., kandidat tekhnicheskikh nauk; VORONKOV, I.M., professor, GITINA, L.Ya., inzhener; GROMAN, M.B., inzhener; GOROKHOV, N.V., doktor tekhnicheskikh nauk [deceased]; DENISYUK, I.N., kandidat tekhnicheskikh nauk; DOVZHIK, S.A., kandidat tekhnicheskikh nauk; DUKEL'SKIY, M.P., professor, doktor khimicheskikh nauk [deceased]; DYKHOVICHNYY, A.I., professor; ZHITKOV, D.G., professor, doktor tekhnicheskikh nauk; KOZLOVSKIY, N.S., inzhener; LAKHTIN, Yu.M., doktor tekhnicheskikh nauk; LEVENSON, L.B., professor, doktor tekhnicheskikh nauk [deceased]; LEVIN, B.Z., inzhener; LIPKAN, V.F., inzhener; MARTYNOV, M.V., kandidat tekhnicheskikh nauk; MOLEVA, T.I., inzhener; NOVIKOV, F.S., kandidat tekhnicheskikh nauk; OSETSKIY, V.M., kandidat tekhnicheskikh nauk; OSTROUMOV, G.A.; PONOMARENKO, Yu.F., kandidat tekhnicheskikh nauk; RAKOVSKIY, V.S., kandidat tekhnicheskikh nauk; REGIRER, Z.L., inzhener; SOKOLOV, A.N., inzhener; SOSUNOV, G.I., kandidat tekhnicheskikh nauk; STEPANOV, V.N., professor; SHEMAKHANOV, M.M., kandidat tekhnicheskikh nauk; EL'KIND, I.A., inzhener; YANUSHEVICH, L.V., kandidat tekhnicheskikh nauk; BOKSHITSKIY, Ya.M., inzhener, redaktor; BULATOV, S.B., inzhener, redaktor; GASHINSKIY, A.G., inzhener, redaktor; GRIGRO'YEV, V.S., inzhener, redaktor; YEGURNOV, G.P., kandidat tekhnicheskikh nauk, redaktor; ZHARKOV, D.V., dotsent, redaktor; ZAKHAROV, Yu.G., kandidat tekhnicheskikh nauk, redaktor; KAMINSKIY, V.S., kandidat tekhnicheskikh nauk, redaktor; KOMARKOV, Ye.F., professor, redaktor; KOSTYLEV, B.N., inzhener, redaktor; POVAROV, L.S., kandidat tekhnicheskikh nauk, redaktor; ULINICH, F.R., redaktor; KLORIK'YAN, S.Kh., otvetstvennyy redaktor; GLADILIN, L.V., redaktor;

(Continued on next card)

APPROVED FOR RELEASE: 06/15/2000 CIA-RDP86-00513R001341910005-7"

"APPROVED FOR RELEASE: 06/15/2000 CIA-RDP86-00513R001341910005-7

BEYLINA, TS.O. --- (continued) Card 2.

RUPPENEYT, K.V., redaktor; TERPIGOREV, A.M., glavnyy redaktor; BARABANOV, F.A., redaktor; BARANOV, A.I., redaktor; BUCHNEV, V.K., redaktor; GRAFOV, L.Ye., redaktor; DOKUKIN, A.V., redaktor; ZADEMIDKO, A.N., redaktor; ZASYAD'KO, A.F., redaktor; KRASNIKOVSKIY, G.V. redaktor; LETOV, N.A., redaktor; DISHIN, G.L., redaktor; MAN'KOVSKIY, G.I., redaktor; MEL'NIKOV, N.V., redaktor; ONIKA, D.G., redaktor; OSTROVSKIY, S.B., redaktor; POKROVSKIY, N.M., redaktor; POLSTYANOY, G.N., redaktor; SKOCHINSKIY, A.A., redaktor; SONIN, S.D., redaktor; SPIVAKOVSKIY, A.O., redaktor; STANCHENKO, I.K., redaktor; SUDOPLATOV, A.P., redaktor; TOPCHIYEV, A.V., redaktor; TROYANSKIY, S.V., redaktor; SHEVYAKOV, L.D., redaktor; BYKHOVSKAYA, S.N., redaktor izdatel'stva; ZAZUL'SKAYA, V.F., tekhnicheskiy redaktor; PROZOROVSKAYA, V.L., tekhnicheskiy redaktor.

[Mining; an encuclopedic handbook] Gornoe delo; entsiklopedicheskii spravochnik. Glav.red. A.M. Terpigorev. Chleny glav.red. F.A. Barabanov i dr. Moskva, Gos.nauchno-tekhn.izd-vo lit-ry po ugol'noi promysh]. Vol.1. [General engineering] Obshchie inzhenernye svedeniia. Redkollegiia toma S.Kh.Klorik'ian i dr. 1957. 760 p. (Mining engineering) (MLRA 10:10)

APPROVED FOR RELEASE: 06/15/2000 CIA-RDP86-00513R001341910005-7"

"APPROVED FOR RELEASE: 06/15/2000 CIA-RDP86-00513R001341910005-7

POLSTYANOY, G.N.; KHARCHENKO, A.K.

Transition to a shortened workday in coal mines. Ugol' 31 no.12:4-8 D '56. (MLRA 10:2)

(Donets Basin--Coal mines and mining)

APPROVED FOR RELEASE: 06/15/2000 CIA-RDP86-00513R001341910005-7"

"APPROVED FOR RELEASE: 06/15/2000 CIA-RDP86-00513R001341910005-7

KRIVOSHEYEV, V.N., inzh.; POLSTYANOY, V.A., inzh.; CHERNOV, G.I., inzh.
LAZNEVOY, V.S., inzh.

Adopting machines for calcining limestone in the sintering process.
Stal' 21 no. 4:293-296 Ap '61. (MIRA 14:4)

1. Makeyevskiy metallurgicheskiy zavod.
(Ore dressing) (Limestone)

APPROVED FOR RELEASE: 06/15/2000 CIA-RDP86-00513R001341910005-7"

"APPROVED FOR RELEASE: 06/15/2000 CIA-RDP86-00513R001341910005-7

POLSTYANOY, V.I., inzhener

Using centrifuges to separate spent lye from neat soap. Masl.-zhir. prom.21 no.6:32 '55. (MLRA 8:12)

1. Khar'kovskiy mylovarennyy zavod no.1.
(Soap)

APPROVED FOR RELEASE: 06/15/2000 CIA-RDP86-00513R001341910005-7"

"APPROVED FOR RELEASE: 06/15/2000 CIA-RDP86-00513R001341910005-7

POLSTYANOY, V.I.

BESPYATOV, M.P., kandidat tekhnicheskikh nauk, dotsent;
PREOBRAZHENSKAYA, Ye.A., inzhener; POLSTYANOY, V.I., inzhener.

TNB apparatus for continuous carbonate saponification of split fats. Masl.-zhir. prom. 22 no.7:29-30 '56. (MLRA 9:12)

1. Khar'kovskiy politekhnicheskiy institut (for Bespyatov and Preobrazhenskaya) 2. Khar'kovskiy mylovarennyy kombinat (for Polstyanoy).
(Oil industries--Equipment and supplies)

APPROVED FOR RELEASE: 06/15/2000 CIA-RDP86-00513R001341910005-7"

"APPROVED FOR RELEASE: 06/15/2000 CIA-RDP86-00513R001341910005-7

POL'SKIY M. N.

"The Problem of the Porosity of Soil Complexes,"

Pochvovedeniye, No. 4, 1949.

APPROVED FOR RELEASE: 06/15/2000 CIA-RDP86-00513R001341910005-7"

"APPROVED FOR RELEASE: 06/15/2000 CIA-RDP86-00513R001341910005-7

KHRUSHCHEV, N.S.; PODGORNYY, N.V.; ZASYAD'KO, A.F.; RUDAKOV, A.P.; KAZANETS, I.P.; SHILIN, A.A.; MEL'NIKOV, N.V.; BURMISTROV, A.A.; SHEVCHENKO, V.V.; MAYAKOV, L.I.; ROZENKO, P.A.; KUZ'MICH, A.S.; ZADEMIDKO, A.N.; BRATCHENKO, B.F.; STRUYEV, A.I.; KRASNIKOVSKIY, G.V.; BOYKO, A.A.; KAGAN, F.Ya.; USKOV, A.A.; VLADYCHENKO, I.M.; TOPCHIYEV, A.V.; DEGTYAREV, V.I.; KHUDOSOVTSEV, N.M.; GRAFOV, L.Ye.; IVANOV, V.A.; KRATENKO, I.M.; GOLUB, A.D.; IVONIN, I.P.; SAVCHENKO, A.A.; ROZHCHENKO, Ye.N.; CHERNEGOV, A.S.; MARKELOV, M.N.; LALAYANTS, A.M.; GAPONENKO, F.T.; POLUEKTOV, I.A.; SKLYAR, D.S.; PONOMARENKO, N.F.; POTAPOV, A.I.; POLYAKOV, N.V.; SUBBOTIN, A.A.; POLSTYANOY, G.N.; TRUKHIN, P.M.; TKACHENKO, A.G.; OSTROVSKIY, S.B.; NYRTSEV, M.P.; DYADYK, I.I.; SHPAN'KO, T.P.; RUBCHENKO, V.P.

Kondrat Ivanovich Pochenkov; obituary. Sov. shakht. 11 no.9: 48 S '62. (MIRA 15:9)

(Pochenkov, Kondrat Ivanovich, 1905-1962)

APPROVED FOR RELEASE: 06/15/2000 CIA-RDP86-00513R001341910005-7"

"APPROVED FOR RELEASE: 06/15/2000 CIA-RDP86-00513R001341910005-7

POSTYANOY, V.I.

Processing peanuts in Ukrainian oil mills. Masl.-zhir.prom. 17 no.8:1-3 Ag '52. (MLRA 10:9)

1. TSentral'naya nauchno-issledovatel'skaya laboratoriya Ukrglavraszhirmaslo.

(Ukraine--Peanuts)

APPROVED FOR RELEASE: 06/15/2000 CIA-RDP86-00513R001341910005-7"

"APPROVED FOR RELEASE: 06/15/2000 CIA-RDP86-00513R001341910005-7

BESPYATOV, M.P., kand.tekhn.nauk; POLSTYANOY, V.I., inzh.; VITSENKO, I.S., inzh.; SUKHOBRUSOV, P.N., inzh.; SHVEDOV, V.K., inzh.; KULIK, Yu.A., inzh.

Continuous contact splitting of fats. Masl.-zhir. prom. 23 no.9:22-23 '57. (MIRA 10:12)

1.Khar'kovskiy politekhnicheskiy institut (for Bespyatov).
2.Khar'kovskiy mylovarennyy kombinat (for Polstyanoy, Vitsenko, Sukhobrusov, Shvedov, Kulik).
(Oils and fats)

APPROVED FOR RELEASE: 06/15/2000 CIA-RDP86-00513R001341910005-7"

"APPROVED FOR RELEASE: 06/15/2000 CIA-RDP86-00513R001341910005-7

POLSTYANOY, V.I.

BESPYATOV, M.P., kandidat tekhnicheskikh nauk; POLSTYANOY, V.I., inzhener; SVINAR, K.P., inzhener.

Operation of continuous apparatus for carbonate saponification of split fats. Masl.-zhir. prom. 23 no.2:39-40 '57. (MIRA 10:4)

1. Khar'kovskiy politekhnicheskiy institut (for Bespyatov). 2. Khar'kovskiy mulovarennyy kombinat (for Polstyanoy, Svinar).
(Oils and fats)

APPROVED FOR RELEASE: 06/15/2000 CIA-RDP86-00513R001341910005-7"

"APPROVED FOR RELEASE: 06/15/2000 CIA-RDP86-00513R001341910005-7

SKIPIN, A.I., kandidat tekhnicheskikh nauk; POLSTYANOY, V.I., inzhener.

Purifying peanut oil. Masl.-zhir.prom. 18 no.6:27-28 Je '53. (MLRA 6:6)

1. Vsesoyuznyy nauchno-issledovatel'skiy institut zhirov (for Skipin).
2. Tsentral'naya nauchno-issledovatel'skaya laboratoriya Ukrglavraszhir-maslo. (Peanut oil)

APPROVED FOR RELEASE: 06/15/2000 CIA-RDP86-00513R001341910005-7"

"APPROVED FOR RELEASE: 06/15/2000 CIA-RDP86-00513R001341910005-7

POLSTYANOY, V. I., Eng.

Oilseeds - Analysis

Moisture meters used in the oil and fat industry. Masl.-zhir. prom. 18 No. 2, 1953.

SO: Monthly List of Russian Accessions, Library of Congress, June 1953, Uncl.

APPROVED FOR RELEASE: 06/15/2000 CIA-RDP86-00513R001341910005-7"

"APPROVED FOR RELEASE: 06/15/2000 CIA-RDP86-00513R001341910005-7

POLSTYANOY, V.P., inzhener.

Rapid method for determining moisture in meats. Masl.-zhir.prom. 17 no.12:10-12 D '52. (MIRA 10:9)

1. TSentral'naya nauchno-issledovatel'skaya laboratoriya Ukrglavrazzhirmaslo.
(Moisture--Measurement) (Oilseeds)

APPROVED FOR RELEASE: 06/15/2000 CIA-RDP86-00513R001341910005-7"

"APPROVED FOR RELEASE: 06/15/2000 CIA-RDP86-00513R001341910005-7

DOBRANYI, Geza; DOBOS, Jozsefne; POLSZTER, Akos

Changing the color equilibrium of color reversible films by applying various developing agents. Kep hang 6 no.1:1-4 F '60.

1. Magyar Filmlaboratorium.

APPROVED FOR RELEASE: 06/15/2000 CIA-RDP86-00513R001341910005-7"

"APPROVED FOR RELEASE: 06/15/2000 CIA-RDP86-00513R001341910005-7

POLTARANINA, T.F.

Separation of heavy nonferrous metals from diluted aqueous solutions by ionic flotation. Zap. LGI 42 no.3:78-84 '63. (MIRA 17:10)

APPROVED FOR RELEASE: 06/15/2000 CIA-RDP86-00513R001341910005-7

"APPROVED FOR RELEASE: 06/15/2000 CIA-RDP86-00513R001341910005-7

Country : USSR
Category : Cultivated Plants. Cerelas. Leguminous Plants. Tropical Cereals. M

Abs Jour : RZhBiol., No 6, 1959, No 24803

Author :
Inst :
Title :

Orig Pub :

Abstract : from the bogar sections was higher by 2-3 c/ha than the harvest of the seeds from the irrigated soils. To obtain high-quality seeds from irrigated soils, it is recommended to develop for the seed parcels specific agricultural engineering (fertilization, irrigation regime, sowing periods and selection of the varieties). -- L. S. Garanika

Card : 2/2

APPROVED FOR RELEASE: 06/15/2000 CIA-RDP86-00513R001341910005-7"

"APPROVED FOR RELEASE: 06/15/2000 CIA-RDP86-00513R001341910005-7

POLTARATSKIY, V.G.

[How to plant potatoes in checkrows] Kak posadit' kartofel' kvadratno-gnezdovym sposobom. Frunze, Kirgizskoe gos. izd-vo, 1954. 21 p. (Potatoes) (MLRA 10:3)

APPROVED FOR RELEASE: 06/15/2000 CIA-RDP86-00513R001341910005-7"

"APPROVED FOR RELEASE: 06/15/2000 CIA-RDP86-00513R001341910005-7

ALISOV, Boris Pavlovich; POLTARAUS, Boris Vasil'yevich; TATARINOVA, Ye.I., red.; KOZLOVA, T.A., tekhn. red.

[Climatology] Klimatologiia. Moskva, Izd-vo Mosk. univ., 1962. 255 p. ___ 14 maps. (MIRA 16:1)

(Climatology)

APPROVED FOR RELEASE: 06/15/2000 CIA-RDP86-00513R001341910005-7"

"APPROVED FOR RELEASE: 06/15/2000 CIA-RDP86-00513R001341910005-7

GVOZDETSKIY, N.A., prof.; ZHUCHKOVA, V.K., dots.; ALISOV, B.P., prof.; VASIL'YEVA, I.V., dots.; VARLAMOVA, M.N., tekhnik-kartograf; DOLGOVA, L.S., dots.; ZVORYKIN, K.V., st. nauchnyy sotr.; ZEMTSOVA, A.I., assistent; IVANOVA, T.N.; LEBEDEV, N.P., st. prepodavatel'; LYUBUSHKINA, S.G.; NESMEYANOVA, G.Ya., mlad. nauchnyy sotr.; PASHKANG, K.V., st. prepod.; POLTARAUS, B.V., dots.; RYCHAGOV, G.I., st. prepod.; SPIRIDONOV, A.I., dots.; SMIRNOVA, Ye.D., mlad. nauchnyy sotr.; SOLNTSEV, N.A., dots.; FEDOROVA, I.S., mlad. nauchnyy sotr.; TSESEL'CHUK, Yu.N., mlad. nauchnyy sotr.; SHOST'INA, A.A., mlad. nauchnyy sotr.; Prinimali uchastiye: BELOUSOVA, N.I.; GOLOVINA, N.N.; KALASHNIKOVA, V.I.; KOZLOVA, L.V.; KARTASHOVA, T.N.; PAN'KOVA, L.I.; URKIKHO, V.; PETROVA, K.A., red.; LOPATINA, L.I., red.; YERMAKOV, M.S., tekhn. red.

[Physicogeographical regionalization of the non-Chernozem center] Fiziko-geograficheskoe raionirovanie nechernozemnogo tsentra. Pod red. N.A.Gvozdetskogo i V.K.Zhuchkovoi. Moskva, Izd-vo Mosk. univ., 1963. 450 p. (MIRA 16:5)
(Physical geography)

APPROVED FOR RELEASE: 06/15/2000 CIA-RDP86-00513R001341910005-7"

"APPROVED FOR RELEASE: 06/15/2000 CIA-RDP86-00513R001341910005-7

POLTARAUS, B.V.

Radiation regime in certain types of summer weather and the sea's influence on it in the Evpatoria region. Vest.Mosk. un. Ser. 5: Geog. 17 no.1:27-36 Ja-F '62. (MIRA 16:7)

1. Kafedra meteorologii i klimatologii Moskovskogo universiteta. (Evpatoria region--Solar radiation--Observations)

APPROVED FOR RELEASE: 06/15/2000 CIA-RDP86-00513R001341910005-7"

"APPROVED FOR RELEASE: 06/15/2000 CIA-RDP86-00513R001341910005-7

POLTARAUS, B.V.

Meteorological effectiveness of forest shelterbelts in summer season. Vest. Mosk. un. Ser. 5 no.5:28-34 S-O '60. (MIRA 13:11)

1. Kafedra meteorologii i klimatologii Moskovskogo universiteta.
(Forest influences) (Evaporation--Measurement)

APPROVED FOR RELEASE: 06/15/2000 CIA-RDP86-00513R001341910005-7"

"APPROVED FOR RELEASE: 06/15/2000 CIA-RDP86-00513R001341910005-7

POLTARAUS, B.V.

Seasonal variations in the wind-breaking action of forest shelterbelts. Vest. Mosk. un. Ser. biol., pochv., geol., geog. 12 no.4: 227-231 '57. (MIRA 11:5)

1. Kafedra klimatologii Moskovskogo gosudarstvennogo universiteta.
(Windbreaks, shelterbelts, etc.)

APPROVED FOR RELEASE: 06/15/2000 CIA-RDP86-00513R001341910005-7"

"APPROVED FOR RELEASE: 06/15/2000 CIA-RDP86-00513R001341910005-7

POLTARAUS, B.V.

Influence of shelterbelts on the temperature of the air. Vop.geog. 28:139-155 '52. (MLRA 7:5)

1. Geograficheskiy fakul'tet Moskovskogo gosudarstvennogo universiteta. (Windbreaks, shelterbelts, etc.) (Atmospheric temperature)

APPROVED FOR RELEASE: 06/15/2000 CIA-RDP86-00513R001341910005-7"

"APPROVED FOR RELEASE: 06/15/2000 CIA-RDP86-00513R001341910005-7

Country :
CATEGORY : [illegible]

ABS. JOUR. : RZBiol., No. 1, 1959, No. 327

AUTHOR : Shulyndin, A. Ye.; Poltarev, Ye. M.
INST. :
TITLE : Inheritance and Formation of Vernalization Stage in Hybrids Between Species of Wheat

ORIG. PUB. : Agrobiologiya, 1957, No 4, 48-58

ABSTRACT : Experimental data on analysis of six generations of hybrids between soft winter wheat (Alabasskaya, Odesskaya 3, Ferrugineum 1239, Pimenka, Lyutestsens 17) which undergo the vernalization stage, at a temperature of 0-2°, within 40-45 days; hard summer wheat (Narodnaya and Melyanopus 69), which undergo vernalization within 3-7 days, and semi-winter varieties (Arandana, Gordenform 1426/7, and Krasavitsa Kabardy), which undergo it within 15-17 days at a temperature of about 5°. By crossing soft winter wheat with hard summer wheat a hard winter wheat was produced which, when planted in the spring, produces no spikes, and on being planted in the fall is found to be winter hardy at Kherson and Khar'kov.

CARD: S. Ya. Krayevoy.

APPROVED FOR RELEASE: 06/15/2000 CIA-RDP86-00513R001341910005-7"

"APPROVED FOR RELEASE: 06/15/2000 CIA-RDP86-00513R001341910005-7

SHULYNDIN, A.F., doktor sel'skokhozyaystvennykh nauk; POLTAREV, Ye.M., kand.biologicheskikh nauk

Development and inheritance of photoperiodic features in interspecific hybrids of wheat. Agrobiologiia no.4:516-524 Jl-Ag '61. (MIRA 14:7)

1. Ukrainskiy ordena Lenina nauchno-issledovatel'skiy institut rasteniyevodstva, selektsii i genetiki, Khar'kov.
(Wheat breeding) (Photoperiodism)

APPROVED FOR RELEASE: 06/15/2000 CIA-RDP86-00513R001341910005-7"

"APPROVED FOR RELEASE: 06/15/2000 CIA-RDP86-00513R001341910005-7

POLTAREV, Ye.M.; SHULYNDIN, A.F.

Formation of the photo stage in interspecific wheat hybrids. Dokl. AN SSSR 110 no.5:866-869 O '56. (MIRA 10:1)

1. Institut genetiki i selektsii Akademii nauk USSR. Predstavleno akademikom T.D. Lysenko.

(Wheat)

APPROVED FOR RELEASE: 06/15/2000 CIA-RDP86-00513R001341910005-7"

"APPROVED FOR RELEASE: 06/15/2000 CIA-RDP86-00513R001341910005-7

POLTAREV, YE.M.

SHULYNDIN, A.Ye., doktor sel'skokhozyaystvennykh nauk; POLTAREV, Ye.M.

Inheritance and formation of the vernalization stage in interspecific wheat hybrids. Agrobiologiia no.4:48-58 Jl-Ag '57. (MLRA 10:9)

1. Ukrainskiy nauchno-issledovatel'skiy institut rasteniyevodstva, selektsii i genetiki, Khar'kov.
(Wheat) (Vernalization)

APPROVED FOR RELEASE: 06/15/2000 CIA-RDP86-00513R001341910005-7"

"APPROVED FOR RELEASE: 06/15/2000 CIA-RDP86-00513R001341910005-7

SHULYNDIN, A.F., doktor sel'skokhozyaystvennykh nauk; POLTAREV, Ye.M.

Differences in the vernalization stage in seeds and green plants of interspecific hybrids. Dokl. Akad. sel'khoz. 23 no.4:14-17 '58. (MIRA 11:5)

1.Ukrainskiy nauchno-issledovatel'skiy institut rasteniyevodstva, selektsii i genetiki. Predstavleno akademikom D.D. Berezhnevym.
(Wheat--Vernalization)

APPROVED FOR RELEASE: 06/15/2000 CIA-RDP86-00513R001341910005-7"

"APPROVED FOR RELEASE: 06/15/2000 CIA-RDP86-00513R001341910005-7

POLTAREV, YE. M., CAND BIO SCI, ~~A~~ M STUDY OF THE FORM~~ING~~ation AND SUCCESSION OF ~~THE~~ STAGES OF VERNALIZATION AND LIGHT ~~PERCEPTION~~ IN INTERSPECI~~ES~~es HYBRIDS OF WHEAT IN RELATION TO WINTERHARDINESS. KIEV, 1960. (MIN OF HIGHER AND SEC SPEC ED UKSSR. KIEV ORDER OF LENIN STATE UNIV IM T. G. SHEVCHENKO). (KL, 2-61, 205).

APPROVED FOR RELEASE: 06/15/2000 CIA-RDP86-00513R001341910005-7"

"APPROVED FOR RELEASE: 06/15/2000 CIA-RDP86-00513R001341910005-7

POLTAREV, Ye. M.

Iarovization stage in hybrid and nonhybrid wheats under natural 34-40 conditions. Agrobiologiia no. 3:34-40 My-Je '58.(MIRA 11:7)

1. Ukrainskiy nauchno-issledovatel'skiy institut rasteniyevodstva, selektsii i genetiki, g. Khar'kov.
(Wheat)

APPROVED FOR RELEASE: 06/15/2000 CIA-RDP86-00513R001341910005-7"

"APPROVED FOR RELEASE: 06/15/2000 CIA-RDP86-00513R001341910005-7

POLTAREV, Ye.M.

Vernalization stage in interspecific wheat hybrids. Dokl.AN SSSR 111 no.5:1138-1141 D '56. (MLRA 10:2)

1. Institut genetiki i selektsii Akademii nauk USSR. Predstavleno akademikom A.L. Kursanovym.
(Wheat) (Vernalization)

APPROVED FOR RELEASE: 06/15/2000 CIA-RDP86-00513R001341910005-7"

"APPROVED FOR RELEASE: 06/15/2000 CIA-RDP86-00513R001341910005-7

POLTARAUS, B. V.

POLTARAUS, B. V. - "Drought in the Territory of Voronezhskaya Oblast and Tambovskaya Oblast." Sub 25 Apr 52, Moscow Order of Lenin State U imeni M. V. Lomonosov. (Dissertation for the Degree of Candidate in Geographical Sciences).

SO: Vechernaya Moskva January-December 1952

APPROVED FOR RELEASE: 06/15/2000 CIA-RDP86-00513R001341910005-7"

"APPROVED FOR RELEASE: 06/15/2000 CIA-RDP86-00513R001341910005-7

POLTASHEVSKIY, G.V., tekhn.; NECHITAYLO, K.Ya., inzh.

Inductor for the heating of welded boiler collector joints during assembly operations. Svar. proizv. no.3:39-40 Mr '61. (MIRA 14:3)

1. Trest "Teploenergomontazh" (Khar'kov).
(Boilers—Welding) (Induction heating)

APPROVED FOR RELEASE: 06/15/2000 CIA-RDP86-00513R001341910005-7"

"APPROVED FOR RELEASE: 06/15/2000 CIA-RDP86-00513R001341910005-7

POLTASHEVSKIY, G.V., proizvoditel' rabot; NECHITAYLO, K. Ya., inzh.

Thermal treatment of the joints of the boiler headers during installation operations. Energetik 9 no.5:9-10 My '61. (MIRA 14:5)

(Boilers--Welding)

APPROVED FOR RELEASE: 06/15/2000 CIA-RDP86-00513R001341910005-7"

"APPROVED FOR RELEASE: 06/15/2000 CIA-RDP86-00513R001341910005-7

S/135/61/000/003/012/014
A006/A001

AUTHORS: Poltashevskiy, G. V., Technician, Nechitaylo, K. Ya., Engineer

TITLE: Inductor for Preheating Welded Butts of Boiler Manifolds During Assembly on Site

PERIODICAL: Svarochnoye proizvodstvo, 1961, No. 3, pp. 39-40

TEXT: Manifolds of TP-100 boilers are assembled and welded on site. Welding of the manifolds is conducted with preheating of the butts. 12ХМФ (12KhMF) steel manifolds require heat treatment after welding. For this purpose induction heating is employed. Difficulties arose when placing the inductors, since the distance along the axis of manifolds to be welded was only 200 mm. A bare cable inductor of 180 - 240 mm^2 section could not be placed on such a limited space. Therefore 2 other types of inductors were tested, namely: a 50 x 4 mm aluminum-bar inductor and a water cooled copper-tube inductor with 12 x 1 and 10 x 1 tube diameter. The aluminum inductor proved unsuitable. The copper tube device was more appropriate and was employed for heat treating important butts of the manifolds (See Figure). The inductor is made of 8 - 12 copper tube coilings; tube diameter is 12 x 1 or 10 x 1 mm. The coilings are insulated by 1 - 2 glass cloth

Card 1/4

APPROVED FOR RELEASE: 06/15/2000 CIA-RDP86-00513R001341910005-7"

"APPROVED FOR RELEASE: 06/15/2000 CIA-RDP86-00513R001341910005-7

S/135/61/000/003/012/014
A006/A001

Inductor for Preheating Welded Butts of Boiler Manifolds During Assembly on Site

layers or 2 - 3 asbestos cloth or sheet layers. The coilings are water cooled; water (18 - 20°C) is supplied from a tank and removed after cooling. The tank is placed 10 m above the annealing space. Maximum current density is 40 amp/mm^2; it can be raised when using 8 x 1 mm diameter tubes, but water pressure must then be higher too. It should be considered that the annealed tubes loose their ability to deformation after 2 - 3 fold coiling; their further use requires repeated annealing. Preheating conditions of manifold butts for welding and heat treatment are given in a table:

Card 2/4

APPROVED FOR RELEASE: 06/15/2000 CIA-RDP86-00513R001341910005-7"

"APPROVED FOR RELEASE: 06/15/2000 CIA-RDP86-00513R001341910005-7

S/135/61/000/003/012/014
A006/A001

Inductor for Preheating Welded Butts of Boiler Manifolds During Assembly on Site

Diameter of manifolds in mm	Number of coilings in the inductor	Mean annealing current amp	Transformer type	Preheating time of butts for welding in sec.	Time of preheating the the butts to 730°C in sec
273 x 35	10 - 12	750 - 850	ТСД(TSD) -1000	35 - 45	50 - 70
273 x 45	10 - 12	750 - 850	ТСД(TSD) -1000	35 - 45	50 - 70
377 x 50	10 - 12	900 - 1200	ТСД(TSD) -2000	60 - 90	90 -120
426 x 20	8 - 10	800 - 850	ТСД(TSD) -2000	45 - 60	60 - 90
325 x 18	8 - 10	700 - 800	ТСД(TSD) -1000	30 - 40	45 - 60

Remark: The feed voltage of the network must be constant

Card 3/4

APPROVED FOR RELEASE: 06/15/2000 CIA-RDP86-00513R001341910005-7"

"APPROVED FOR RELEASE: 06/15/2000 CIA-RDP86-00513R001341910005-7

S/135/61/000/003/012/014
A006/A001

Inductor for Preheating Welded Butts of Boiler Manifolds During Assembly on Site

Figure:
Inductor for preheating manifold butts
1 - contacts; 2 - inductor coilings; 3 - asbestos sheet insulation; 4 - rubber tubes for removing water.
There are 1 figure and 1 table.

ASSOCIATION: "Teploenergmontazh" Trust (Khar'kov)

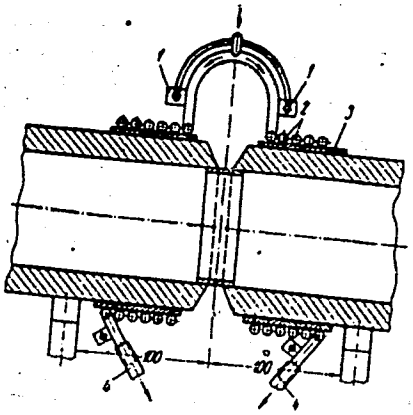

Card 4/4

APPROVED FOR RELEASE: 06/15/2000 CIA-RDP86-00513R001341910005-7"

"APPROVED FOR RELEASE: 06/15/2000 CIA-RDP86-00513R001341910005-7

POLTAVA, I.G.; KAZANSKAYA, T.B.

Morphology and cytology of Actinomyces streptomycini in relation to the composition of culture media. Mikrobiologiia 30 no.1:72-75 Ja-F '61. (MIRA 14:5)

1. Institut mikrobiologii AN SSSR.
(ANTINOMYCES)

APPROVED FOR RELEASE: 06/15/2000 CIA-RDP86-00513R001341910005-7"

"APPROVED FOR RELEASE: 06/15/2000 CIA-RDP86-00513R001341910005-7

POLTAVA, I. G., AGATOV, P. A., KAZASKAYA, T. B., GALANINA, L. A. (USSR)

"Participation of Certain Chemical Compounds in Streptomycin Biosynthesis."

Report presented at the 5th International Biochemistry Congress, Moscow, 10-16 August 1961

APPROVED FOR RELEASE: 06/15/2000 CIA-RDP86-00513R001341910005-7"

"APPROVED FOR RELEASE: 06/15/2000 CIA-RDP86-00513R001341910005-7

MAYMIN, Semen Rafailovich; POLTAVA, Leonid Ivanovich; GOKHFEL'D, M.V., dots., otv. red.; TRET'YAKOVA, AN., red.; SEMASHKO, Yu.Yu., tekhn. red.

[Electric substations and networks on mine surfaces] Podstantsii i seti na poverkhnosti rudnikov. Khar'kov, Izd-vo Khar'kovskogo univ. 1961. 255 p. (MIRA 16:7)
(Electricity in mining)
(Electric power distribution)

APPROVED FOR RELEASE: 06/15/2000 CIA-RDP86-00513R001341910005-7"

"APPROVED FOR RELEASE: 06/15/2000 CIA-RDP86-00513R001341910005-7

POLTAVA, Vera Andreyevna; SHAVARINA, N., red.; CHERNOVA, T., spets. red.; YURGANOVA, M., tekhn. red.

[Dressmaking, knitting and embroidery] Kroika, shit'e, viazanie i vyshivanie. Chita, Chitinskoe knizhnoe izd-vo, 1960. 213 p. (MIRA 14:11)

(Dressmaking—Pattern books) (Knitting) (Embroidery—Patterns)

APPROVED FOR RELEASE: 06/15/2000 CIA-RDP86-00513R001341910005-7"

"APPROVED FOR RELEASE: 06/15/2000 CIA-RDP86-00513R001341910005-7

17(2) SOV/20-128-4-57/65

AUTHORS: Shaposhnikov, V. N., Academician, Kazanskaya, T. B., Poltava, I. G.

TITLE: The Effects of Compounds of the Pyrrole Group on the Development of Actinomyces streptomycini

PERIODICAL: Doklady Akademii nauk SSSR, 1959, Vol 128, Nr 4, pp 840-842 (USSR)

ABSTRACT: The fungus mentioned in the title grows well on a medium containing one single nitrogen source, namely the amino acid proline (of the pyrrole group (I)); physiologically active substances containing one pyrrole ring ((II)-(VIII)) are mentioned. The problem still to be solved is, whether Act. streptomycini makes use of the pyrrole ring or whether a pyrrole ring which is connected with a certain atom group, is required for the development of this fungus. For this purpose experiments with some of the mentioned compounds had to be made. Earlier experiments with oxyproline showed that this substance alone, in contrast to proline, favors the growth of Actinomycetes. A list of publications (Refs 2-6) is given which shows that there are hardly any data on the subject concerned. Therefore the effect mentioned in the title

Card 1/3

APPROVED FOR RELEASE: 06/15/2000 CIA-RDP86-00513R001341910005-7"

"APPROVED FOR RELEASE: 06/15/2000 CIA-RDP86-00513R001341910005-7

SOV/20-128-4-57/65

The Effects of Compounds of the Pyrrole Group on the Development of Actinomyces streptomycini

is ment to be explained for the first time by the authors. Strain LS-1 from the Kiyevskaya selektsionnaya stantsiya (Kiyev Selection Station) growing on a mineral glucose containing medium, is used for this purpose. 2% of soya bean flour or amino acid or of any pyrrole compound were added which corresponded to a nitrogen content of 112 mg per 100 ml. For the method see reference 1. The effects of succinamide (VIII), succinimide (VII), pyrrolidine (II) and others, on the vital activity of strain LS-1 were examined. Proline (III) and oxyproline (IV) were also used for comparison. Table 1 shows the results. On the basis of these results, the authors arrived at the following conclusions: 1) synthetic media, containing proline, histidine with lysine and also one of the pyrrole group: (III), (VII), or (VIII), favor the growth of the fungus and the formation of streptomycin. The yields of the latter amounted to 74-84% of those with soya bean flour. 2) (IV), the only nitrogen source, favors the growth but stimulates the development of the antibiotic only weakly (Table 1). Added to media with basic amino acids (IV) also favors growth, but reduces the streptomycin yield (Table 2).

Card 2/3

APPROVED FOR RELEASE: 06/15/2000 CIA-RDP86-00513R001341910005-7"

"APPROVED FOR RELEASE: 06/15/2000 CIA-RDP86-00513R001341910005-7

The Effects of Compounds of the Pyrrole Group on the Development of Actinomyces streptomycini SOV/20-128-4-57/65

There are 2 tables and 6 references, 1 of which is Soviet.

ASSOCIATION: Institut mikrobiologii Akademii nauk SSSR (Institute of Microbiology of the Academy of Sciences, USSR)

SUBMITTED: July 2, 1959

Card 3/3

APPROVED FOR RELEASE: 06/15/2000 CIA-RDP86-00513R001341910005-7"

"APPROVED FOR RELEASE: 06/15/2000 CIA-RDP86-00513R001341910005-7

8(5)

AUTHOR: Poltava, L. I., Docent SOV/105-59-3-21/27

TITLE: An Analysis of the Reliability of Electric Power Supply Systems in Deep Coal Pits (Analiz nadezhnosti sistem elektrosnabzheniya glubokikh ugol'nykh shakht)

PERIODICAL: Elektrichestvo, 1959, Nr 3, pp 91 - 92 (USSR)

ABSTRACT: This article is a commentary on the paper by V. I. Bocharov in Elektrichestvo, 1957, Nr 10. Errors in the paper by Bocharov are pointed out. On the basis of an incorrect formula, Bocharov arrives at the conclusion that no further reserve can be economically justified if two or three supply cables are in operation. The interrelation between the electric power consumption and the efficiency of a pit is investigated and it is shown that Bocharov does not take into account the relation between Δq and the power supply deficit ΔE. This is the first error committed by him.

$\Delta q = \frac{\Delta Q}{Q_n}$, where ΔQ denotes the reduction in coal production and Q_n is the target coal production. The second error

Card 1/2

APPROVED FOR RELEASE: 06/15/2000 CIA-RDP86-00513R001341910005-7"

"APPROVED FOR RELEASE: 06/15/2000 CIA-RDP86-00513R001341910005-7

committed by Bocharov consists of the fact, that he made an erroneous assumption in the calculation of the emergency probability for N cables without reserve. He assumed the numerical value of the emergency probability with the argumentation, that a breakdown of two or more cables is improbable. This way of reasoning, however, is a far cry from probability theory. Formula (4) is deduced and it shows that without reserve the reliability of an electric power supply decreases with an increase in the number of cables. This is exactly contradictory to the conclusions drawn by Bocharov. It is shown that formula (10) deduced by Bocharov is of no practical value either with or without reserve. The numerical values resulting from formula (7) in this paper specifying the mathematical expectation for a breakdown (loss) differ by a factor of six from those advanced by Bocharov in the calculation of a practical example. There is 1 Soviet reference.

ASSOCIATION: Dneprovskiy gornyy institut (Dnepr Mining Institute)

APPROVED FOR RELEASE: 06/15/2000 CIA-RDP86-00513R001341910005-7"

"APPROVED FOR RELEASE: 06/15/2000 CIA-RDP86-00513R001341910005-7

POLTAVA, L.I., dots.

Analyzing the reliability of electric supply systems for deep coal mines. Elektrichestvo no.3:91-92 Mr '59. (MIRA 12:3)

1. Dneprovskiy gornyy institut.
(Electricity in mining)

APPROVED FOR RELEASE: 06/15/2000 CIA-RDP86-00513R001341910005-7"

"APPROVED FOR RELEASE: 06/15/2000 CIA-RDP86-00513R001341910005-7

POLTAVA, L.I., dotsent; KIRICHOK, Yu.G., inzh.

Transfer functions and structural diagrams of electric drives with mechanical resilient links. Izv. vys. ucheb. zav.; gor. zhur. 7 no.5:98-104 '64. (MIRA 17:12)

1. Dnepropetrovskiy ordena Trudovogo Krasnogo Znameni gornyy institut imeni Artema (for Poltava). 2. Energolaboratoriya tresta Dzerzhinskruda (for Kirichok). Rekomendovana kafedroy gornoy elektrotekhniki Dnepropetrovskogo ordena Trudovogo Krasnogo Znameni gornogo instituta im. Artema.

APPROVED FOR RELEASE: 06/15/2000 CIA-RDP86-00513R001341910005-7"

"APPROVED FOR RELEASE: 06/15/2000 CIA-RDP86-00513R001341910005-7

POLTAVA, L. I. PA 15/49T23

USSR/Electricity Jul 48
Generators, Direct Current

"Sudden Short Circuits in Direct-Current Generators With Three Excitation Windings," L. I. Poltava, Docent, Cand Tech Sci, Krivorog Mining Inst, 2¼ pp

"Elektrichestvo" No 7

Generators of this type are extensively used in Leonard system for controlling presses. Considers case of sudden short circuit and analyzes transition process. Deduces formula for maximum current.

[redacted] 15/49T23

APPROVED FOR RELEASE: 06/15/2000 CIA-RDP86-00513R001341910005-7"

"APPROVED FOR RELEASE: 06/15/2000 CIA-RDP86-00513R001341910005-7

POLTAVA, L. I. PA 15/49T41

USSR/Electricity Aug 48
Motors, Direct Current
Motors, Electric

"Regulating Characteristics of a Direct-Current Shunt Motor," L. I. Poltava, Cand Tech Sci, Krivoi Rog, 1½ pp

"Elektrichestvo" No 8

Refers to article by N. V. Gorokhov on this subject (29T25). Investigates characteristics of shunt motors used for mechanisms where static moment is function of speed, e.g., fans, centrifugal pumps, etc.

[redacted] 15/49T41

APPROVED FOR RELEASE: 06/15/2000 CIA-RDP86-00513R001341910005-7"

"APPROVED FOR RELEASE: 06/15/2000 CIA-RDP86-00513R001341910005-7

POLTAVA, L.I., dots.; FURSOV, V.D., assistent

Protection from single-phase contacts to ground in high-voltage mine circuits. Izv.vys.ucheb.zav.; gor.zhur. no.1: 54-59 '59. (MIRA 13:1)

1. Dnepropetrovskiy gornyy institut. Rekomendovana kafedroy tekhnologii gornoy elektrotekhniki.
(Electricity in mining)

APPROVED FOR RELEASE: 06/15/2000 CIA-RDP86-00513R001341910005-7"

"APPROVED FOR RELEASE: 06/15/2000 CIA-RDP86-00513R001341910005-7

POLTAVA, L.I., dotsent; FURSOV, V. I., assistent

Automation and telemechanics in central mine substations in coal mines. Izv. vys. ucheb. zav.; gor. zhur. no.11:92-98 1959. (MIRA 14:5)

1. Dnepropetrovskiy gornyy institut imeni Artema. Rekomendovana kafedroy gornoy elektrotekhniki.

(Coal mines and mining)
(Automatic control)
(Electricity in mining)

APPROVED FOR RELEASE: 06/15/2000 CIA-RDP86-00513R001341910005-7"

"APPROVED FOR RELEASE: 06/15/2000 CIA-RDP86-00513R001341910005-7

POLTAVA, L. I.

SA B 64
c

3207. Plotting of the characteristics of a generator-motor group in which the generator has three field windings. L. I. Poltava. Elektrichestvo (No. 6) 36-7 (June, 1950) In Russian.

The method given is based on no-load and short-circuit tests which can easily be carried out during the regulation tests of the group.

B. F. KRAUS

ASM-SLA METALLURGICAL LITERATURE CLASSIFICATION

APPROVED FOR RELEASE: 06/15/2000 CIA-RDP86-00513R001341910005-7"

"APPROVED FOR RELEASE: 06/15/2000 CIA-RDP86-00513R001341910005-7

POLTAVA, L.I., kand.tekhn.nauk; KIRICHOK, Yu.G., inzh.

Indices of the operating reliability of skip hoists. Gor. zhur. no.3:59-60 Mr '62. (MIRA 15:7)

1. Dnepropetrovskiy gornyy institut (for Poltava). 2. Energolaboratoriya tresta Dzerzhinskruda, Krivoy Rog (for Kirichok).
(Mine hoisting)

APPROVED FOR RELEASE: 06/15/2000 CIA-RDP86-00513R001341910005-7"

"APPROVED FOR RELEASE: 06/15/2000 CIA-RDP86-00513R001341910005-7

VOLOTKOVSKIY, Sergey Andronikovich, doktor tekhn. nauk, prof.; POLTAVA, Leonid Ivanovich, kand. tekhn. nauk, dots.; BUN'KO, Viktor Aleksandrovich, kand. tekhn. nauk, dots.; PODOL'SKIY, Vladimir Arsen'yevich, kand. tekhn.nauk, dots.; SAPILOV, A.V., otv. red.; KOVAL', I.V., red. izd-va; PROZOROVSKAYA, V.L., tekhn. red.; SHKLYAR, S.Ya., tekhn. red.

[Technical means for automation of the mining industry]Tekhnicheskie sredstva avtomatiki v gornoi promyshlennosti. Pod obshchei red. S.A.Volotkovskogo. Moskva, Gosgortekhizdat, 1962. 331 p. (MIRA 16:2)

[redacted]

1. Dnepropetrovskiy gornyy institut im. Artema (for Volotkovskiy, Poltava, Bun'ko, Podol'skiy).
(Automation) (Mining engineering)

APPROVED FOR RELEASE: 06/15/2000 CIA-RDP86-00513R001341910005-7"

"APPROVED FOR RELEASE: 06/15/2000 CIA-RDP86-00513R001341910005-7

POLTAVA, Vera Andreyevna; RAPOTA, A.M., spets. red.; MURAKAYEVA, A., red. izd-va; BAKHTIYAROV, A., tekhn. red.

[Learn to sew, knit, embroider] Uchites' shit', viazat', vyshivat'. 2., perer. i dop. izd. Tashkent, Gosizdat UzSSR, 1962. 359 p. (MIRA 15:7)

(Sewing—Study and teaching)
(Knitting—Study and teaching)
(Embroidery—Study and teaching)

APPROVED FOR RELEASE: 06/15/2000 CIA-RDP86-00513R001341910005-7"