"APPROVED FOR RELEASE: 06/15/2000 CIA-RDP86-00513R001341920014-6

POLYAK, G.L.; ADRIANOV, V.N.

Algebra of resolvent fluxes in radiant exchange. Inzh.-fiz. zhur. 5 no.7:70-77 Jl '62. (MIRA 15:7)

1. Energeticheskiy institut imeni G.M.Krzhizhanovskogo, Moskva.
(Heat—Radiation and absorption)

APPROVED FOR RELEASE: 06/15/2000 CIA-RDP86-00513R001341920014-6"

"APPROVED FOR RELEASE: 06/15/2000 CIA-RDP86-00513R001341920014-6

ACCESSION NR: AP4038664 S/0170/64/000/004/0074/0080

AUTHOR: Adrianov, V. N.; Polyak, G. L.

TITLE: Differential methods of studying radiative heat transfer

SOURCE: Inzhenerno-fizicheskiy zhurnal, no. 4, 1964, 74-80

TOPIC TAGS: Radiative heat transfer, heat exchange, heat radiation

ABSTRACT: The article reviews differential methods of studying radiative heat transfer which because of their relative simplicity have opened up new possibilities. The development of these methods is presented in chronological order, the names of the originators are given, and the methods are compared. Because the differential methods are based on approximate differential equations of heat radiation, they have undergone constant refinement, and this appears to be the direction in which they will continue to develop in the future. Orig. art. has: 16 formulas.

ASSOCIATION: Energeticheskiy institut im. G. M. Krzhizhanovskogo, Moscow (Institute of Power Engineering)

Card 1/2

APPROVED FOR RELEASE: 06/15/2000 CIA-RDP86-00513R001341920014-6"

"APPROVED FOR RELEASE: 06/15/2000 CIA-RDP86-00513R001341920014-6

ACCESSION NR: AP4041072 S/0170/64/000/006/0063/0069

AUTHOR: Polyak, G. L.

TITLE: New method of investigating radiative heat transfer

SOURCE: Inzhenerno-fizicheskiy zhurnal, no. 6, 1964, 63-69

TOPIC TAGS: heat transfer, radiative heat transfer

ABSTRACT: The method proposed is based on the solution of differential equations in which the tensor character of the radiation field is accounted for. Calculations for a plane layer carried out by this method are of high accuracy, as is demonstrated with an example of the solution of a one-dimensional problem. Also mentioned are works of other authors in this field such as S. N. Shorin, R. K. Kopakov, H. S. Hottel, Van der Held, etc. Orig. art. has: 2 figures and 23 formulas.

ASSOCIATION: Energeticheskiy institut im. G. M. Krzhizhanovskogo, Moscow (Power Engineering Institute)

Card 1/2

APPROVED FOR RELEASE: 06/15/2000 CIA-RDP86-00513R001341920014-6"

"APPROVED FOR RELEASE: 06/15/2000 CIA-RDP86-00513R001341920014-6

POLYAK, G. L.

20

Theory of Heat Exchange in Combustion Chambers. (In Russian.) G. L. Polyak and S. N. Shorin. *Izvestiya Akademii Nauk SSSR* (Bulletin of the Academy of Sciences of the USSR), Section of Technical Sciences, Dec. 1949, p. 1832-1847.

Proposes a formula for calculation of the above. Principles of this new method are thoroughly analyzed. Experimental investigations confirmed validity of the formulas.

Energetics Inst-im. Krzhizhanovskiy

A10-5LA METALLURGICAL LITERATURE CLASSIFICATION

APPROVED FOR RELEASE: 06/15/2000 CIA-RDP86-00513R001341920014-6"

"APPROVED FOR RELEASE: 06/15/2000 CIA-RDP86-00513R001341920014-6

POLYAK, G.L., inzh.; SALITA, P.Z., inzh.

Use of d.c. transmission to improve stability. Elektrichestvo no. 5: 12-14 My '58. (MIRA 11:7)

1. Nauchno-issledovatel'skiy institut postoyannogo toka.
(Electric power distribution--Direct current)

APPROVED FOR RELEASE: 06/15/2000 CIA-RDP86-00513R001341920014-6"

"APPROVED FOR RELEASE: 06/15/2000 CIA-RDP86-00513R001341920014-6

24(8) PHASE I BOOK EXPLOITATION SOV/1826

Akademiya nauk SSSR. Energeticheskiy institut

Teploperedacha i teplovoye modelirovaniye (Heat Transfer and Modeling of Heat Processes) Moscow, Izd-vo AN SSSR, 1959. 419 p. Errata slip inserted. 1,500 copies printed.

Resp. Ed.: M. A. Mikheyev, Academician; Ed. of Publishing House: D. A. Ivanova; Tech. Ed.: G. N. Shevchenko.

PURPOSE: The book is intended for scientists concerned with heat transfer, heat emission, and hydraulics of liquid metals, etc.

COVERAGE: This collection is dedicated to the memory of Academician M. V. Kirpichev who in the twenties initiated a systematic investigation of heat transfer processes and the efficiency of heat apparatus. Later he led the development of research work in this field. Two special collections devoted to works of Kirpichev's school have been published, one in 1938, Materialy soveshchaniya po modelirovaniya (Materials of the Conference on Modeling) and in 1951, Teoriya podobiya i modelirovaniye (Theory of Similitude and Modeling). The present collection prepared in 1956 represents further development of the work of this school. This theory is fundamental for the analysis of many heat problems in the field of electrical and radio engineering. Of great importance are the first systematic investigations of heat transfer and the hydraulics of liquid metals which as a new kind of heat carrier may be used in the various branches of modern engineering. As a result of special investigations of some cases of convective heat transfer, a dependence of the process on the kind of liquid, temperature, pressure, direction of the heat flow, and other factors, was discovered and established. On the basis of a wide generalization of experimental data, new dependable recommendations for heat analysis of engineering equipment were developed. Of no less interest is the work on heat transmission in boiling liquids and the condensation of vapors. All investigations are based on the theory of similitude, the nature of which, according to M. V. Kirpichev, is that of "experimentation." Work on the theory of a regular regime applied to a system of bodies with an internal source of heat is of interest for the future.

Shorin, S. N., G. L. Polyak, I. P. Kolchenogova, V. N. Adrianov, and O. N. Yermolayev. Light Modeling of Radiation Heat Transfer 365

The article gives fundamentals of the theory of radiation exchange in transparent and in illuminated media. It describes sources of light and changes of illumination and gives a photographic method for measuring streams of light. Investigations of radiation exchanges in cylindrical chambers and in banks of pipes, transfer of radiation energy in an illuminated medium, local illumination of walls of boiler burners and hearth bottoms of open hearth steel furnaces are described. The following personalities are mentioned: O. Ye. Vlusov (approximate solution of a cylindrical equation), Ye. S. Kuznetsov (dispersion of radiation), Academician M. V. Kirpichev (investigation of radiation heat transfer in light models), L. A. Vulis (light modeling), G. L. Polyak, and S. N. Shorin (theory of radiation exchanges), and with the cooperation of V. I. Konstantinov (radiation exchanges in banks of pipes). The section on "Photographic Method of Measuring Light Streams" was compiled by V. N. Adrianov and G. L. Polyak; the section "Investigation of the Transfer of Radiation Energy in an Illuminated Medium" was compiled by I. P. Kolchenova, S. N. Shorin and V. N. Adrianov; sections on "Measurement of Local Illumination of Walls of Models of Boiler Burners" and "Investigation of Local Illumination of the Surface of the Bottom of an Open-hearth Furnace" were compiled by O. N. Yermolayev and S. N. Shorin. There are 27 references: 19 Soviet, 5 English, and 3 German.

AVAILABLE: Library of Congress

Card 20/20

IV/dfh
8-7-59

APPROVED FOR RELEASE: 06/15/2000 CIA-RDP86-00513R001341920014-6"

"APPROVED FOR RELEASE: 06/15/2000 CIA-RDP86-00513R001341920014-6

ADRIANOV, V.N.; POLYAK, G.L.

Differential methods for radiative heat transfer study. Inzh.-fiz. zhur. 7 no.4:74-80 Ap '64. (MIRA 17:4)

1. Energeticheskiy institut imeni G.M.Krzhizhanovskogo, Moskva.

APPROVED FOR RELEASE: 06/15/2000 CIA-RDP86-00513R001341920014-6"

"APPROVED FOR RELEASE: 06/15/2000 CIA-RDP86-00513R001341920014-6

PHASE I BOOK EXPLOITATION SOV/3407

Akademiya nauk SSSR. Energeticheskiy institut im. G.M. Krzhizhanovskogo

Problemy energetiki; sbornik posvyashchayetsya akademiku G.M. Krzhizhanovskomu (Problems of Power Engineering; Collection of Articles Dedicated to Academician G.M. Krzhizhanovskiy) Moscow, 1959. 851 p. Errata slip inserted. 2,500 copies printed.

Eds. of Publishing House: B.D. Antrushin, F.V. Dubkov, F.I. Dubkov, and S.M. Moyzhes; Tech. Ed.: T.A. Prusakova; Editorial Board: A.V. Vinter, Academician (Deceased), V.I. Popkov (Resp. Ed.) Corresponding Member, Academy of Sciences USSR, V.I. Veyts, A.S. Predvoditelev, M.A. Styrikovich, N.F. Chekmanov, N.N. Bogdanova, Candidate of Technical Sciences, B.K. Khalov, Candidate of Technical Sciences, M.M. Lebedev, Candidate of Technical Sciences, and I.N. Sundukov.

PURPOSE: This collection of articles is intended as a tribute to the memory of Academician G.M. Krzhizhanovskiy.

COVERAGE: The collection contains sixty articles by former students and coworkers of the deceased Academician. The articles deal with problems of a wide range of subjects in the field of power engineering: problems of the regional development of electrical and thermal power engineering, power engineering technology, and the physics of combustion. No personalities are mentioned. References are given after most articles.

Burov, Yu. G., V.A. Zeirnov. Investigation of Heat Exchange in Pellicular Condensation of Pure Vapors 411

Zurinov, Yu.A. Basic Methods of the Present Theory of Heat Exchange of Radiation 423

Andrianov, V.N., G.Ya. Polyak. Photographic Method of Measuring Luminous Flames 470

Styrikovich, M.A., I. Kh. Khayrullin, and L.K. Zhokhlov. Effect of the Rules of Solubility of Substances in Water Vapor on Boiler Water 483

Fateyev, Ye.M. The Role of Science in the Development of Soviet Wind Technology 496

Styrikovich, M.A., M.S. Chkrob. Results of the Activity of the Commission for High Parameter Steam and Scientific Tasks in Increasing the Reliability and Economy of Thermal Electric Power Stations in the Future 526

Chukhanov, Z.F. Basic Principles of Power Engineering 543

Chukhanov, Z.F. Problem of the Mechanism of Thermal Decomposition of Fuels 564

Shapatina, Ye.A. Dynamics of the Process of Separating Volatile Substances From Solid Fuels 575

Kalyuzhnyy, V.V. High-Speed "Bertinization" of Solid Fuels (Retarded Combustion) 585

Kashurichev, A.F. Intensity of Heating Fuels and Control of the Process of Their Thermal Decomposition 595

Khitrin, L.N. Theory of Combustion and Problems of Intensification of the Processes of Burning 605

Speysher, V.A., V.N. Iyevlev, V.I. Anreyev, B.B. Zeirnov. Burning of Turbulent Gas-Air Streams in Unflow Fireproof Chambers 637

Shelestin, Yu.P., V.G. Vetrov. Two-Stage High-Speed Furnaces 639

Lykov, A.V. Mass-Heat Exchange in State and Chemical Transformations 673

Zeirnov, M.S. Heating Damp Substances 681

Chukhanov, Z.F., A.M. Nikolayev, A.F. Kashurichev. Utilization of Cut Peat in Power Engineering 687

Solokhin, R.I. Flows of Gas During Ignition Occurring Beyond the Shock Wave 735

Pustkin, V.S. Structure of Heterogeneous Flows in a Shock Front 745

Predvoditelev, A.S. Motion of Combustion Zone as a Hydrodynamic Heterogeneity 793

Dotsenko, B.B. Making Sutherland Formulae More Precise for Kinetic Gas Coefficients 817

Pereleshina, A.P. Physical and Chemical Properties of Thermistors Manufactured From Manganic Oxide 823

Polyak G.

APPROVED FOR RELEASE: 06/15/2000 CIA-RDP86-00513R001341920014-6"

"APPROVED FOR RELEASE: 06/15/2000 CIA-RDP86-00513R001341920014-6

S/081/61/000/024/034/086
B117/B147

245200

AUTHOR: Polyak, G. L.

TITLE: Radiant heat exchange of bodies with arbitrary indicatrices of surface reflection

PERIODICAL: Referativnyy zhurnal. Khimiya, no. 24, 1961, 287, abstract 24I71 (Sb. "Konvektivn. i luchistyy teploobmen", M., AN SSSR, 1960, 118 - 132)

TEXT: The description of radiant exchange of bodies requires the use of quantities characterizing the spatial non-uniformity of radiation and reflection. The author develops a theory of radiant exchange, and introduces an integral equation for the brightness of radiation in a transparent medium. The equation was derived for the general case of radiant heat exchange in an arbitrarily closed volume when considering the radiation at the given point M, and is valid for monochromatic radiation. Equations are presented for systems with ideally scattered reflection from both surfaces as well as for the case where the ideally scattering

Card 1/2

APPROVED FOR RELEASE: 06/15/2000 CIA-RDP86-00513R001341920014-6"

"APPROVED FOR RELEASE: 06/15/2000 CIA-RDP86-00513R001341920014-6

Radiant heat exchange ... S/081/61/000/024/034/086
B117/B147

surface is the envelope and where the internal one has an arbitrary reflection indicatrix. Furthermore, the case was considered, in which the nature of radiation currents is significantly changed only by one change of the reflection indicatrix from one surface (parabolic reflector with a white and a mirror surface at total reflection). The field of current lines of the radiation vector and the fields of illumination are graphically represented for this case. For the total radiation it is recommended that a brightness factor averaged over the spectrum should be introduced, whereby the integration of the initial equation can be simplified.
[Abstracter's note: Complete translation.]

Card 2/2

APPROVED FOR RELEASE: 06/15/2000 CIA-RDP86-00513R001341920014-6"

"APPROVED FOR RELEASE: 06/15/2000 CIA-RDP86-00513R001341920014-6

ADRIANOV, V.N.; POLYAK, G.L.

Using the photographic method for the light modeling of radiant heat exchange. Zhur.nauch.i prikl.fot.i kin. 5 no.2:123-132 Mr-Ap '60. (MIRA 14:5)

1. Energeticheskiy institut AN SSSR.
(Photographic sensitometry)
(Heat—Radiation and absorption)

APPROVED FOR RELEASE: 06/15/2000 CIA-RDP86-00513R001341920014-6"

"APPROVED FOR RELEASE: 06/15/2000 CIA-RDP86-00513R001341920014-6

ACC NR: AT7003571 (N) SOURCE CODE: UR/0000/66/000/000/0281/0290

AUTHORS: Dorri, M. Kh.; Polyak, G. L.

ORG: Institute of Automation and Remote Control, Moscow (Institut avtomatiki i telemekhaniki)

TITLE: Mathematical modeling of heat exchangers containing internal heat sources with variable heat-transfer agent consumption

SOURCE: AN BSSR. Institut teplo- i massoobmena. Issledovaniye teplo- i massoobmena v tekhnologicheskikh protsessakh i apparatakh (Study of heat and mass transfer in technological processes and apparatus). Minsk, Izd-vo Nauka i tekhnika, 1966, 281-290

TOPIC TAGS: heat transfer, heat exchanger, mathematic model, Laplace equation, frequency characteristic, temperature

ABSTRACT: An analog of a heat exchanger consisting of a cylindrical channel, in which the heat-transfer agent flows at a variable rate, is examined. The equations of this physical model are:

$$a_1 \frac{\partial \theta(x, \tau)}{\partial \tau} = P(\tau) - \alpha(\tau) R[\theta(x, \tau) - t(x, \tau)],$$

$$a_2 \frac{\partial t(x, \tau)}{\partial \tau} + c_2 G(\tau) \frac{\partial t(x, \tau)}{\partial x} = \alpha(\tau) R[\theta(x, \tau) - t(x, \tau)],$$

$$a_1 = c_1 \gamma_1 F_1; \; a_2 = c_2 \gamma_2 F_2.$$

Card 1/3

APPROVED FOR RELEASE: 06/15/2000 CIA-RDP86-00513R001341920014-6"

"APPROVED FOR RELEASE: 06/15/2000 CIA-RDP86-00513R001341920014-6

ACC NR: AT7003571

The problem consists of determining the output temperature of the heat-transfer agent $t_2(\tau) = t(L, \tau)$ as a function of the input temperature $t_1(\tau) = t(0, \tau)$, the heat release in the wall $P(\tau)$, and the flow rate of the heat-transfer agent $G(\tau)$. A closed system of equations for modeling the heat exchanger is obtained:

$$b_2 \frac{d\bar{\theta}(\tau)}{d\tau} = b_2 P(\tau) - b_1 a(\tau)[\bar{\theta}(\tau) - \bar{t}(\tau)];$$

$$\frac{d\bar{t}(\tau)}{d\tau} + G[t_2(\tau) - t_1(\tau)] = b_1 a(\tau)[\bar{\theta}(\tau) - \bar{t}(\tau)];$$

$$\frac{dt_2}{d\tau} = 12G(\tau)\bar{t} - 6G(\tau)[t_2(\tau) + t_1(\tau)] + \frac{dt_1}{d\tau},$$

and its diagram is shown in Fig. 1.

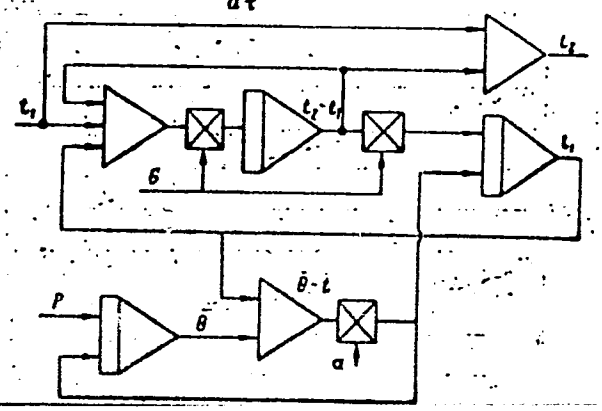

Fig. 1. Diagram of mathematical model of heat exchanger

Card 2/3

Card 3/3

APPROVED FOR RELEASE: 06/15/2000 CIA-RDP86-00513R001341920014-6

"APPROVED FOR RELEASE: 06/15/2000 CIA-RDP86-00513R001341920014-6

EWP(k)/EWT(d)/EWP(h)/EWP(i)/EWP(v)

ACC NR: AP7003062 SOURCE CODE: UR/0103/66/000/008/0116/0123

AUTHOR: Polyak, G. L. (Moscow)
ORG: none

19

TITLE: Application of the predicting method to some nonlinear systems

SOURCE: Avtomatika i telemekhanika, no. 8, 1966, 116-123
TOPIC TAGS: nonlinear control system, optimal control

ABSTRACT: A basis is given for optimal control with prediction for objects consisting of series-connected first order links, linear or with monotonous characteristics plus second order links which are subjected to conditions similar to the conditions of non-oscillation for linear systems. The method is based on having a computer perform accelerated calculation of future optimal trajectories from a point corresponding to the state of the system at the present moment. In this work, the predictions method is expanded to include systems where curtailment of order is not applicable. Considering the limitations applied to the problem, in most cases optimal control can be performed by the "acceleration - deceleration" principle. The sign of the control in the first interval can usually be determined by observation of the disagreement sign. In other cases two controls must be applied in the first interval, both maximizing and minimizing. Orig. art. has: 2 figures and 25 formulas. [JPRS: 38,836]

SUB CODE: 13 / SUBM DATE: 22Nov65 / ORIG REF: 006

Card 1/1 JB

UDC: 62-505.385

0925 2000

APPROVED FOR RELEASE: 06/15/2000 CIA-RDP86-00513R001341920014-6"

"APPROVED FOR RELEASE: 06/15/2000 CIA-RDP86-00513R001341920014-6

L 26395-66 EPF(n)-2/EWT(1)/ETC(f)/EWG(m) WW

ACC NR: AP6007195 SOURCE CODE: UR/0170/66/010/002/0264/0267

AUTHORS: Adrianov, V. N.; Polyak, G. L.

ORG: Moscow Power Institute imeni G. M. Krzhizhanovskiy (Energeticheskiy institut)

TITLE: On the differential method for investigating radiative heat transfer

SOURCE: Inzhenerno-fizicheskiy zhurnal, v. 10, no. 2, 1966, 264-267

TOPIC TAGS: radiative heat transfer, optic thickness, integral equation

ABSTRACT: This article is an answer to P. K. Konakov (whose letter was published in IFZh, 8, No. 3, 1965) who criticized the authors' previous publication (IFZh, 7, No. 4, 1964). Three points brought out by Konakov are refuted. First, according to Konakov, the formulation of boundary conditions relating the radiation flux on the wall q to the wall temperature according to the diffusion method is wrong. The authors show that this method has been generally accepted throughout the world as a proper technique and that Konakov's approach can lead to the erroneous conclusion that the equation

$$(cU)_l/4 = \sigma_0 T_w^4,$$

follows from conditions of local thermodynamic equilibrium. Second, the authors

Card 1/2 UDC: 536.3

APPROVED FOR RELEASE: 06/15/2000 CIA-RDP86-00513R001341920014-6"

"APPROVED FOR RELEASE: 06/15/2000 CIA-RDP86-00513R001341920014-6

L 26395-66
ACC NR: AP6007193

show that Konakov uses Buger's law but ignores radiation interaction with the medium over a photon mean free path. Third, Konakov claims that the radiation diffusion coefficient equals $c/4k$ instead of $c/3k$. The authors show that this is true only for optically thin gases where $k\delta << 1$. Finally, Konakov's attack on Hottel's mathematical analysis as "not clear" is refuted as unfounded. Orig. art. has: 3 formulas and 1 figure.

SUB CODE: 20/ SUBM DATE: 31Jul65/ ORIG REF: 010/ OTH REF: 006

Card 2/2

APPROVED FOR RELEASE: 06/15/2000 CIA-RDP86-00513R001341920014-6"

"APPROVED FOR RELEASE: 06/15/2000 CIA-RDP86-00513R001341920014-6

POLIAK, G.I.; ADRIANOV, V.N.

New method for studying heat transfer by radiation. Inzh.-fiz. zhur. 7 no.6:63-69 '64. (MIRA 17:12)

1. Energeticheskiy institut imeni G.M. Krzhizhanovskogo, Moskva.

APPROVED FOR RELEASE: 06/15/2000 CIA-RDP86-00513R001341920014-6"

"APPROVED FOR RELEASE: 06/15/2000 CIA-RDP86-00513R001341920014-6

STARODUBTSEV, S. V.; GENERALOVA, V. V.; POLYAK, G. V.

Effect of irradiation conditions on the radiolysis of carbohydrate solutions. Izv. AN Uz.SSR. Ser. fiz.-mat. nauk 7 no.1: 39-45 '63. (MIRA 16:4)

1. Institut yadernoy fiziki AN UzSSR.

(Carbohydrates) (Radiation--Dosage)

APPROVED FOR RELEASE: 06/15/2000 CIA-RDP86-00513R001341920014-6"

"APPROVED FOR RELEASE: 06/15/2000 CIA-RDP86-00513R001341920014-6

POLYAK, G.V.

S/166/63/000/001/004/010
B104/B186

AUTHORS: Starodubtsev, S. V., Generalova, V. V., Polyak, G. V.

TITLE: The influence of the irradiation conditions on the radiolysis of carbohydrate solutions

PERIODICAL: Akademiya nauk Uzbekskoy SSR. Izvestiya. Seriya fiziko-matematicheskikh nauk, no. 1, 1963, 39 - 45

TEXT: Glucose, maltose and saccharose solutions have been irradiated in closed and open ampuls of molybdenum glass by Co^{60} with an activity of $120 \cdot 10^{13}$ g·equ. Ra, the dose rates being varied between 27 and 600 r/sec at temperatures between 0 and 80°C. The aim was to study the influence of the dose rate, the temperature and occluded gases on the properties of this solutions. Results: The rotation of the polarization plane increases with the dose rate. The variation of the specific rotation is the greater the smaller concentration. The polarization plane rotation of a solution depends only slightly on the dose rate, on the irradiation temperature, on the outer pressure and on the existence of occluded gases. The absorption maxima are in the near UV (264 - 270 mμ) and depend linearly on the dose

Card 1/2

APPROVED FOR RELEASE: 06/15/2000 CIA-RDP86-00513R001341920014-6"

"APPROVED FOR RELEASE: 06/15/2000 CIA-RDP86-00513R001341920014-6

S/166/63/000/001/004/010
B104/B186

The influence of the irradiation....

rate in wide range. Dose rate, pressure, presence of oxygen show almost no effect on the absorption maximum. The dioxyacetone yield increases considerably with the irradiation temperature. The upper limit of determination of the absorbed dose depends highly on the concentration of the solutions. At a glucose concentration of 9 % the upper limit is $300 \cdot 10^9$ r, 18 % - $450 \cdot 10^6$ r, 45 % - $800 \cdot 10^6$ r. Similarly, at high dose rates, a new acidic polymer with a molecular weight of 1200 - 4000 and an empirical formula $(C_6H_{10}O_{6.8})_n$ was discovered by S. A. Barker et al., Rad. Res., 16, N3, 1962. There are 6 figures.

ASSOCIATION: Institut yadernoy fiziki AN UzSSR (Institute of Nuclear Physics AS UzSSR)

SUBMITTED: October 9, 1962

Card 2/2

APPROVED FOR RELEASE: 06/15/2000 CIA-RDP86-00513R001341920014-6"

"APPROVED FOR RELEASE: 06/15/2000 CIA-RDP86-00513R001341920014-6

POLYAK, I

130-7-6/24

AUTHORS: Polyak, I. and Sokolov, O.

TITLE: All-Union Conference of Steel Melters. (Vsesoyuznoye Soveshchaniye staleplavil'shchikov)

PERIODICAL: Metallurg, 1957, Nr 7, pp.11-12 (USSR)

ABSTRACT: Most of this account of a conference of steel melters held in Sverdlovsk in May, 1957, is devoted to a long report by A.F. Martsymov dealing with the main lines of development of steel-making practice and problems involved in further increases of steel-production rates. After indicating recent improvements in Soviet practice and productivity he stated that recent trends in open-hearth (producing 90% of all steel in the USSR), mentioning the 500-ton furnaces in the imeni Voroshilova works and the production rates of 32-34 tons of steel per hour achieved in the 370-ton furnaces at the Kuznetsk and Magnitogorsk metallurgical combines. Dealing in detail with the use of oxygen, Martsymov said that in 1956 20% of all open-hearth steel was produced using oxygen and that experiments on pre-refining (desiliconization) had been successful at several works. Basic refractories had contributed to the increased production rates and all Soviet furnaces would be given basic roofs during 1957-1958. The use

Card 1/2

APPROVED FOR RELEASE: 06/15/2000 CIA-RDP86-00513R001341920014-6"

"APPROVED FOR RELEASE: 06/15/2000 CIA-RDP86-00513R001341920014-6

POLYAK, I.

Fourth Plenum of the Scientific Technological Society of Ferrous and Nonferrous Metallurgy. Metallurg 6 no.4:40 Ap '61. (MIRA 14:3)

(Metallurgy--Congresses)

APPROVED FOR RELEASE: 06/15/2000 CIA-RDP86-00513R001341920014-6"

"APPROVED FOR RELEASE: 06/15/2000 CIA-RDP86-00513R001341920014-6

POLYAK, I.B., inzh.

High-caloric fuel for open-hearth furnaces. Metallurg 7 no.2:26-27 F '62. (MIRA 15:3)
(Open-hearth furnaces--Design and construction)
(Gas, Natural)

APPROVED FOR RELEASE: 06/15/2000 CIA-RDP86-00513R001341920014-6"

"APPROVED FOR RELEASE: 06/15/2000 CIA-RDP86-00513R001341920014-6

KOCHINEV, Ye.V., spetsred.; NOVIKOVA, F.M., spetsred.; POLYAK, I.B., spetsred.; MAKAROVA, E.A., red.; SHADRINA, N.D., tekhn.red.

[Metallurgists are fighting for technical progress] Metallurgi v bor'be za tekhnicheskii progress. Moskva, Izd-vo VTsSPS Profizdat, 1959. 52 p. (MIRA 13:4)
(Metallurgy) (Rolling (Metalwork))

APPROVED FOR RELEASE: 06/15/2000 CIA-RDP86-00513R001341920014-6"

"APPROVED FOR RELEASE: 06/15/2000 CIA-RDP86-00513R001341920014-6

OYKS, Grigoriy Naumovich, doktor tekhn.nauk; POLYAK, I.B., red.; SUKHAREVA, R.A., tekhn.red.

[Using oxygen in open-hearth steelmaking] Primenenie kisloroda v martenovskom proizvodstve stali. Moskva, 1958. 67 p. (Stenogramma lektsii. Seriia "Metallurgiia," nos.5/6) (MIRA 12:4)
(Open-hearth process) (Oxygen--Industrial applications)

APPROVED FOR RELEASE: 06/15/2000 CIA-RDP86-00513R001341920014-6"

"APPROVED FOR RELEASE: 06/15/2000 CIA-RDP86-00513R001341920014-6

POLYAK, Isaak Berkovich; TRET'YAKOV, Yevgeniy Vasil'yevich; LANOVSKAYA, M.R., red. izd-va; MIKHAYLOVA, V.V., tekhn. red.

[Open-hearth production of steel] Martenovskoe proizvodstvo stali. Moskva, Metallurgizdat, 1963. 161 p. (MIRA 16:6)
(Steel--Metallurgy) (Open-hearth process)

APPROVED FOR RELEASE: 06/15/2000 CIA-RDP86-00513R001341920014-6"

"APPROVED FOR RELEASE: 06/15/2000 CIA-RDP86-00513R001341920014-6

POLYAK, I.G.

Some economic problems concerning the cultivation of Polygonum coriarium Grig. Vop. biol. i kraev. med. no.4: 201-205 '63. (MIRA 17:2)

APPROVED FOR RELEASE: 06/15/2000 CIA-RDP86-00513R001341920014-6"

"APPROVED FOR RELEASE: 06/15/2000 CIA-RDP86-00513R001341920014-6

21653
S/109/61/006/003/008/018
E032/E314

26.2531

AUTHOR: Polyak, I.M.

TITLE: Electron Currents in Penning-type Tubes

PERIODICAL: Radiotekhnika i elektronika, 1961, Vol. 6, No. 3, pp. 395 - 398

TEXT: The present author investigates the conditions under which an electron current may replace the ion current in the cathode circuit of a Penning gauge. The Penning tube has been widely used as an ionisation gauge, an ion source and a high-vacuum pump. High-frequency oscillations have been found to occur in these tubes. The mechanism responsible for the processes occurring in Penning tubes has been investigated by Reykhrudel' et al in Refs. 9 and 10, who were concerned with the ion current under normal working conditions of the device. In the present experiments it was established that there exists a definite value of the magnetic field-strength H at a given anode voltage U_a for which an electron current rather than an ion current will flow in the cathode circuit. The experimental tube employed is shown in Fig. 1.

Card 1/8

APPROVED FOR RELEASE: 06/15/2000 CIA-RDP86-00513R001341920014-6"

"APPROVED FOR RELEASE: 06/15/2000 CIA-RDP86-00513R001341920014-6

The cathode was in the form of a Wehnelt cylinder 1, with a small aperture at one end, as shown. A heated tungsten spiral was placed in the plane of this aperture. The anode 2 and the plane collector 3 were of the usual form. The tube was placed in a uniform magnetic field produced by a long solenoid. Arrangements were made for the displacement of the electrodes, under vacuum, when necessary. In the present experiments, the magnetic field was directed along the z-axis (Fig. 1). Smirnitskaya and Reykhrudel' (Ref. 11) have calculated the form of the trajectories of the electrons in the Penning tube. It was found that for the geometry illustrated in Fig. 1, the equations of motion for an electron emitted from a point (-d, 0) are of the form:

$$\ddot{z} + \frac{2eU_0}{md^2} z = 0, \tag{3}$$

$$\dot{\theta} = \frac{eH}{2mC}, \tag{4}$$

$$\ddot{r} + \left[\left(\frac{eH}{2mC}\right)^2 - \frac{eU_0}{md^2}\right] r = 0. \tag{5}$$

APPROVED FOR RELEASE: 06/15/2000 CIA-RDP86-00513R001341920014-6"

"APPROVED FOR RELEASE: 06/15/2000 CIA-RDP86-00513R001341920014-6

The latter equation has three solutions, namely, $r = A \sin h(\omega t + \alpha)$ when $H < H_c$, $r = Bt + C$ when $H = H_c$ and $r = D \sin(\omega t + \beta)$ when $H > H_c$. H_c is the critical magnetic field given by

$$\frac{eH_c}{2mC} = \left(\frac{eU_o}{md^2}\right)^{1/2} \qquad (6) .$$

The present author has measured the collector current I_3 as a function of the magnetic field H for different values of the anode voltage U_a and the inter-electrode distance d. A typical curve is shown in Fig. 2 ($d = 15$ mm, $U_a = 440$ V, $P = 4.4 \times 10^{-5}$ mm Hg). The electron current is plotted above the H-axis and the ion current below this axis. For a given d, each value of U_a has an associated value of H for

APPROVED FOR RELEASE: 06/15/2000 CIA-RDP86-00513R001341920014-6"

"APPROVED FOR RELEASE: 06/15/2000 CIA-RDP86-00513R001341920014-6

which the electron current at the collector reaches a maximum. These values of U_a and H are given in the first two columns of the table for $d = 15$ mm. The third column gives the critical values H_c calculated from Eqs. (2) and (6), subject to the conditions $d = R$, $U(r,z) = U_a$ at $z = 0$ and $r = R$ (R is the radius of the ring anode and was equal to 15 mm). The simplest explanation of the appearance of the electron current in the collector circuit is as follows: at the cathode the electrons have a Maxwellian velocity distribution corresponding to the cathode temperature and an average energy of the order of 0.3 to 0.4 eV. This is responsible for the electron current in the collector circuit. However, simple measurements have shown that this is not the case. The present author has used the collector as a probe and by applying to it a retarding potential relative to the cathode has determined the collector current. Fig. 3 shows the collector current I_3 as a function of the retarding

APPROVED FOR RELEASE: 06/15/2000 CIA-RDP86-00513R001341920014-6"

"APPROVED FOR RELEASE: 06/15/2000 CIA-RDP86-00513R001341920014-6

21653
S/109/61/006/003/008/018
E032/E314

Electron Currents in ....

potential U_3 (Curve 1) for U_a = 440 V, H = 51 Oe and $P = 2 \times 10^{-5}$ mm Hg. Curve 2 in this figure gives the electron current at the collector obtained by introducing a correction for the ion current. Fig. 4 shows the logarithm of this current as a function of the retarding potential. The "temperature" of the electrons can be obtained from the slope of the straight-line portion of this curve and turned out to be equal to 253 000 °K, which corresponds to an average electron energy of 33 eV. Thus, the average energy of the electrons at the collector surface is one hundred times greater than at the cathode surface. It is clear that when $H = H_c$, the electrons somehow receive additional energy, which ensures that they reach the collector maintained at a negative potential. It is stated that no satisfactory theory of this effect is available at present. The appearance of the electron current in the cathode circuit must be taken into account in the calibration of ionisation manometers.

Card 5/8

APPROVED FOR RELEASE: 06/15/2000 CIA-RDP86-00513R001341920014-6"

"APPROVED FOR RELEASE: 06/15/2000 CIA-RDP86-00513R001341920014-6

21653
S/109/61/006/003/008/018
E032/E314

Electron Currents in ....

There are 4 figures, 1 table and 20 references: 7 Soviet and 13 non-Soviet.

SUBMITTED: January 18, 1960

Table:

U_a, V	H, Oe	H_c, Oe
440	52.5	54.4
480	55.5	56.8
520	57.5	59.0
560	60.0	61.3
600	61.5	63.5

Card 6/8

APPROVED FOR RELEASE: 06/15/2000 CIA-RDP86-00513R001341920014-6"

"APPROVED FOR RELEASE: 06/15/2000 CIA-RDP86-00513R001341920014-6

POLYAK, I.M.

3

Investigation of the
their Application fo
Zh. Tech. Fiz., 195
(no details of con
X-rays, which did
depended on the s
for dosing with X-
photoelements, us
photocurrent was
dose of 24.45 r./m
with a galvanome
X-ray dosimeter.
enough, they can
in space. By usi
increased enough
be used.

Sensitivity of Sulphur-Silver Photoelements to X-Rays and Dosing with X-Rays. I. M. POLYAK and M. N. DYACHENKO. 22, 670-676.—Three differ sulphur-silver photoelements position given) were found to possess high sensitivity to ot change with time. The current from the photoelements ectral composition of the X-rays and therefore when used ays they had to be differentially calibrated. For one of the g a 1 mm. copper filter and a dose of 0.23 r./min., the .73 × 10^{-8} amp., while with a 0.1 mm. copper filter and a ., the current was 2.82 × 10^{-9} amp., so that in conjunction r of sensitivity 10^{-9} amp. per division it can be used as an since the geometrical dimensions of the element are small e used for determining the intensity distribution of X-rays g zinc sulphide fluorescent screens the sensitivity can be or a galvanometer of sensitivity 10^{-8} amp. per division to *Phys. Abs.*

Chair Physics, Khar'kov Inst. Railroad Engr.,
Phys. Lab., Ukr. X-Ray & Oncological Inst.

APPROVED FOR RELEASE: 06/15/2000 CIA-RDP86-00513R001341920014-6"

"APPROVED FOR RELEASE: 06/15/2000 CIA-RDP86-00513R001341920014-6

VAYSFEL'D, D.N. (Odessa, ploshchad' Sovetskoy Armii, d.1. kv.76); POLYAK, I.S.

Changes in the spine in chronic solaritis; abstract. Ortrop. travm. i protez. 22 no.1:84 Ja '61. (MIRA 14:5)

1. Iz kurortnoy polikliniki "Kuyal'nik" Odesskogo kurortnogo upravleniya (glavnyy vrach - I.I.Litinetskiy).
(SPINE) (SOLAR PLEXUS--DISEASES)

APPROVED FOR RELEASE: 06/15/2000 CIA-RDP86-00513R001341920014-6"

"APPROVED FOR RELEASE: 06/15/2000 CIA-RDP86-00513R001341920014-6

HARI, Bela; SOMOSKOI, Gabor; SOMOGYI, Miklos; POLYAK, Janos; HALASZ, Jozsef; DONATH, Bela

Excerpts from remarks made at the 7th plenary session of the National Council of Trade Unions. Munka 10 no.3:8 Mr '60.

1. Veszprem megyei Szakszervezeti Megyei Tanacs elnoke (for Hari) 2. Epitok Szakszervezetenek fotitkara (for Somoskoi) 3. Magyar Szocialista Munkaspart Politikai Bizottsaganak tagja, a Szakszervezetek Orszagos Tanacsa elnoke (for Somogyi) 4. Vasas Szakszervezet titkara es "Munka" szerkesztobizottsaganak tagja (for Polyak) 5. MEDOSZ fotitkara (for Halasz) 6. Szakszervezetek Orszagos Tanacsa munkavedelmi osztalyanak vezetoje (for Donath).

APPROVED FOR RELEASE: 06/15/2000 CIA-RDP86-00513R001341920014-6"

"APPROVED FOR RELEASE: 06/15/2000 CIA-RDP86-00513R001341920014-6

POLYAK, Janos; SZABO, Zoltan, dr.; BESENYEI, Miklos

Forum of the workers of Hungary; questions to be dicussed at the 20th Congress of the Hungarian Trade Unions. Munka 13 no.4:1-4 Ap '63.

1. Vas- es Fémipari Dolgozok Szakszervezetenek fotitkara (for Polyak). 2. Orvos-Egészségügyi Dolgozok Szakszervezete fotitkara (for Szabo). 3. Postasok Szakszervezetenek fotitkara (for Besenyei).

APPROVED FOR RELEASE: 06/15/2000 CIA-RDP86-00513R001341920014-6"

"APPROVED FOR RELEASE: 06/15/2000 CIA-RDP86-00513R001341920014-6

POLYAK, Janos

The Iron and Metal Industry Workers' Trade-Union for accelerating the development of the machine industry. Munka 12 no.10:8-9 O '62.

1. Vas- es Femipari Dolgozok Szakszervezete fotitkara.

APPROVED FOR RELEASE: 06/15/2000 CIA-RDP86-00513R001341920014-6"

"APPROVED FOR RELEASE: 06/15/2000 CIA-RDP86-00513R001341920014-6

FRANTSUZOV, B.L., kand.med.nauk, POLYAK, L.A., FEYGIN, N.P., (kiyev)

Antibiotic therapy in chronic highmoritis. Vest.oto.-rin. 20 no.4 104-105 Jl-Ag '58 (MIRA 11:7)
(ANTIBIOTICS)
(SINUSITIS)

APPROVED FOR RELEASE: 06/15/2000 CIA-RDP86-00513R001341920014-6"

"APPROVED FOR RELEASE: 06/15/2000 CIA-RDP86-00513R001341920014-6

POLYAK, I.M.

Electric current in Penning tubes. Radiotekh. i elektron. 6 no.3:395-398 Mr '61. (MIRA 14:3)
(Electron tubes)

APPROVED FOR RELEASE: 06/15/2000 CIA-RDP86-00513R001341920014-6"

"APPROVED FOR RELEASE: 06/15/2000 CIA-RDP86-00513R001341920014-6

SOV/ 161-58-1-17/33

AUTHORS: Kopylov, Igor' Petrovich, Candidate of Technical Sciences, Assistant to the Chair of Electrical Machines at the Moscow Institute of Power Engineering; Polyak, Leonid Moiseyevich, Engineer at the Experimental Plant of the Scientific Research Institute of Electrical Industry; Radin, Vladimir Isaakovich, Engineer at the Plant imeni Vladimir Il'ich

TITLE: Electrodynamic Differential Amplifier With Bias Magnetization (Differentsial'nyy elektromashinnyy usilitel' s podmagnichivaniyem)

PERIODICAL: Nauchnyye doklady vysshey shkoly, Elektromekhanika i avtomatika, 1958, Nr 1, pp. 136 - 142 (USSR)

ABSTRACT: The mode of operation, the design, the computation and the characteristic curves of an electrodynamical differential amplifier with bias magnetization (EDVM) is investigated. This amplifier is a combination on one aggregate of a magnetic differential amplifier with a d.c. generator. The differential circuit element in the magnetic amplifier inverses the polarity at the output of the electrodynamical amplifier, when

Card 1/3

APPROVED FOR RELEASE: 06/15/2000 CIA-RDP86-00513R001341920014-6"

"APPROVED FOR RELEASE: 06/15/2000 CIA-RDP86-00513R001341920014-6

the polarity of the control signal is inverged. The EDVM warrants a high power amplification factor as high as $10^4 \div 10^6$. Such a high amplification factor is attained by the ganging of the magnetic amplifier and the d.c. motor. It considerably exceeds that of the electrodynamic transverse-field amplifier and that of the two-stage longitudinal-field amplifier. The time constant of the EDVM at a frequency of 50 c is almost equal to that of the transverse-field amplifier. It can, however, be reduced by a feed-back and by a frequency increase of the voltage feeding the input cascade. The essential advantage of the EDVM is its high stability. This is achieved because the output voltage in the whole operational range is a function of the difference of two exciting fluxes, and by a closing of a strong alternating flux through the stator, thus re-magnetizing the whole steel frame of the EDVM. Experiments showed that this new amplifier can be used in systems of automatic control. The data of the test equipment of the EDVM are given. There are 7 figures and 4 references, which are Soviet.

APPROVED FOR RELEASE: 06/15/2000 CIA-RDP86-00513R001341920014-6"

"APPROVED FOR RELEASE: 06/15/2000 CIA-RDP86-00513R001341920014-6

Electrodynamic Differential Amplifier With Bias Magnetization SOV/ 161-58-1-17/33

ASSOCIATION: Kafedra elektricheskikh mashin Moskovskogo energeticheskogo instituta (The Chair of Electrical Machines at the Moscow Institute of Power Engineering)

SUBMITTED: January 4, 1958

Card 3/3

APPROVED FOR RELEASE: 06/15/2000 CIA-RDP86-00513R001341920014-6"

"APPROVED FOR RELEASE: 06/15/2000 CIA-RDP86-00513R001341920014-6

POLYAK, L.A.

Case of primary multiple cancer. Zhur. ush., nos. i gorl. bol. 20 no.1:72-73 Ja-F '60. (MIRA 14:5)

1. Iz otorinolaringologicheskogo otdeleniya (nachal'nik - kand. meditsinskikh nauk B.L.Frantsuzov) Kiyevskogo okruzhnogo gospitalya. (CANCER)

APPROVED FOR RELEASE: 06/15/2000 CIA-RDP86-00513R001341920014-6"

"APPROVED FOR RELEASE: 06/15/2000 CIA-RDP86-00513R001341920014-6

POLYAK, L.A.

Closed injury of the larynx with complete avulsion of the trachea. Zhur. ush., nos. i gorl. bol. 21 no.1:73-75 Ja-F '61. (MIRA 14:6)

1. Iz otolaringologicheskogo otodeleniya (nachal'nik - kand.med. nauk B.L. Frantsuzov) Kiyevskogo okruzhnogo gospitalya.
(LARYNX--WOUNDS AND INJURIES)
(TRACHEA--WOUNDS AND INJURIES)

APPROVED FOR RELEASE: 06/15/2000 CIA-RDP86-00513R001341920014-6"

"APPROVED FOR RELEASE: 06/15/2000 CIA-RDP86-00513R001341920014-6

KOPYLOV, I.P.; POLYAK, L.M.; RADIN, V.I.

Differential rotating amplifier with superposed magnetization. Nauch.dokl.vys.shkoly; elektromekh. i avtom. no.1:136-142 '58. (MIRA 11:11)
(Rotating amplifiers)

APPROVED FOR RELEASE: 06/15/2000 CIA-RDP86-00513R001341920014-6"

"APPROVED FOR RELEASE: 06/15/2000 CIA-RDP86-00513R001341920014-6

KOSTRIKOV, V.S., kand.med.nauk, POLYAK, L.S.

"Diafixation" by K. Pap. Reviewed by V.S. Kostrikov, L.S. Poliak.
Ortop. travm. i protez. 19 no.3:70 My-Je '58 (MIRA 11:7)
(FRACTURES)
(PAP, K.)

APPROVED FOR RELEASE: 06/15/2000 CIA-RDP86-00513R001341920014-6"

"APPROVED FOR RELEASE: 06/15/2000 CIA-RDP86-00513R001341920014-6

BEREZKIN, V.G.; MYSAK, A. Ye.; POLYAK, L.S.

Gas-chromatographic determination of water traces in hydrocarbons. Neftekhimiia 4 no.1:156-159 Ja-F'64 (MIRA 17:6)

1. Institut neftekhimicheskogo sinteza AN SSSR imeni A.V. Topchiyeva.

APPROVED FOR RELEASE: 06/15/2000 CIA-RDP86-00513R001341920014-6"

"APPROVED FOR RELEASE: 06/15/2000 CIA-RDP86-00513R001341920014-6

POLYAK, L.V., Cand Med Sci -- (diss) "Variation in higher nervous activity and phagocytic indicators in the course of scarlet fever in children." Mos, 1958, 16 pp (Inst of Higher Nervous Activity of Acad Sci USSR) 120 copies (KL, 23-58, 112)

APPROVED FOR RELEASE: 06/15/2000 CIA-RDP86-00513R001341920014-6"

"APPROVED FOR RELEASE: 06/15/2000 CIA-RDP86-00513R001341920014-6

POLYAK, L.V.

Changes in the higher nervous activity and phagocyte index in scarlet fever in children [with summary in English]. Pediatriia 36 no.4:65-70 Ap'58 (MIRA 11:5)

1. Iz infektsionnogo otdela (zav. - prof. B.G. Shirvindt) Nauchno-issledovatel'skogo pediatricheskogo instituta Ministerstva zdravo-okhraneniya RSFSR (dir. - kand.med.nauk B.N. Karachevtseva).
(SCARLET FEVER)

APPROVED FOR RELEASE: 06/15/2000 CIA-RDP86-00513R001341920014-6"

"APPROVED FOR RELEASE: 06/15/2000 CIA-RDP86-00513R001341920014-6

POLYAK, L.V.

Effect of the drug "Regenerator" on the course of scarlet fever and complicating diseases. Vop.okh.mat. i det. 1 no.5:91-93 S-O '56. (MLRA 9:11)

1. Iz Gosudarstvennogo nauchno-issledovatel'skogo pediatricheskogo instituta Ministerstva zeravookhraneniya RSFSR (dir. - kandidat meditsinskikh nauk V.N.Kzrachevtseva), Moskva.
(SCARLET FEVER) (PARMACOLOGY)

APPROVED FOR RELEASE: 06/15/2000 CIA-RDP86-00513R001341920014-6"

"APPROVED FOR RELEASE: 06/15/2000 CIA-RDP86-00513R001341920014-6

USSR/Human and Animal Physiology - The Nervous System. T

Abs Jour : Ref Zhur Biol., No 3, 1959, 13249

Author : Polyak, L.V.
Inst :
Title : Changes in Higher Nervous Activity and Phagocytic Index in Children with Scarlatina

Orig Pub : Pediatriya, 1958, No 4, 65-70

Abstract : No abstract.

Card 1/1

APPROVED FOR RELEASE: 06/15/2000 CIA-RDP86-00513R001341920014-6"

"APPROVED FOR RELEASE: 06/15/2000 CIA-RDP86-00513R001341920014-6

AVANESOVA, A.G.; RYABINSKAYA, T.F.; POLYAK, L.V.

Mycerin therapy in colienteritis and other infectious gastrointestinal diseases in young children. Sov.med. 25 no.6:105-109 Je '61. (MIRA 15:1)

1. Iz kliniki detskikh infektsiy (zav. - prof. L.D.Lebedev) II Moskovskogo meditsinskogo instituta imeni N.I.Pirogova (dir. - dotsent M.G.Sirotkina) i iz infektsionnogo otdela (zav. - prof. B.G.Shirvindt) Gosudarstvennogo nauchno-issledovatel'skogo pediatricheskogo instituta (dir. - doktor meditsinskikh nauk A.P.Chernikova) RSFSR.
(ANTIBIOTICS) (GASTROENTEROLOGY)

APPROVED FOR RELEASE: 06/15/2000 CIA-RDP86-00513R001341920014-6"

"APPROVED FOR RELEASE: 06/15/2000 CIA-RDP86-00513R001341920014-6

POLYAK, L.V., kand.med.nauk

Clinical aspects of salmonellosis in children. Pediatria 38 no.4 33-7 Apr. '60. (MIRA 16:7)

1. Iz Nauchno-issledovatel'skogo pediatricheskogo instituta Ministerstva zdravookhraneniya RSFSR (dir. A.P.Chernikova)
(INTESTINES--DISEASES) (SALMONELLA)

APPROVED FOR RELEASE: 06/15/2000 CIA-RDP86-00513R001341920014-6"

"APPROVED FOR RELEASE: 06/15/2000 CIA-RDP86-00513R001341920014-6

SAVINA, M.F.; POLYAK, L.V.; RYABINSKAYA, T.F.

Experience in the work of the diagnostic children's gastrointestinal department of the Fourth Municipal Clinical Hospital. Nauch. trudy Chetv. Mosk. gor. klin. bol'. no.1:40-46 '61. (MIRA 16:2)

1. Otdel ostrykh detskikh infektsiy Gosudarstvennogo nauchno-issledovatel'skogo instituta Ministerstva zdravookhraneniya RSFSR (zav. otdelom prof. B.G. Shirvindt, direktor - doktor med. nauk A.P. Chernikova) i Moskovskaya gorodskaya klinicheskaya bol'nitsa No.4 (glavnyy vrach - G.F. Papko).
(ALIMENTARY CANAL—DISEASES) (MOSCOW—CHILDREN—HOSPITALS)

APPROVED FOR RELEASE: 06/15/2000 CIA-RDP86-00513R001341920014-6"

"APPROVED FOR RELEASE: 06/15/2000 CIA-RDP86-00513R001341920014-6

POLYAK, L.V.

Problem of the clinical aspects of salmonellosis in children. (MIRA 13:10)
Pediatriia 38 no.1:3-6 '60.
(SALMONELLA)

APPROVED FOR RELEASE: 06/15/2000 CIA-RDP86-00513R001341920014-6"

"APPROVED FOR RELEASE: 06/15/2000 CIA-RDP86-00513R001341920014-6

POLYAK, Lidiya Vasil'yevna, kand. med. nauk; POTAPOVA, I.N., red.; BASHMAKOV, G.M., tekhn. red.

[Scarlet fever in children]Skarlatina u detei. Moskva, Medgiz, 1962. 14 p. (MIRA 16:1)
(SCARLET FEVER)

APPROVED FOR RELEASE: 06/15/2000 CIA-RDP86-00513R001341920014-6"

"APPROVED FOR RELEASE: 06/15/2000 CIA-RDP86-00513R001341920014-6

Potentiometric determination of iron and copper in aluminum alloys of the Duralumin type. I. Ya. Polyak. *Zavodskaya Lab.* 12, 975-8(1940)(in Russian). To det Fe and Cu in an alloy, dissolve 1.0 g. in a mixt. of 1 part concd. HNO_3, 3 parts concd. HCl, and 6 parts concd. H_2SO_4. Evap. to fumes and dil. with 30-40 ml. of 0 N H_2SO_4. Filter if necessary, introduce a stream of CO_2 for about 2 min., and add 1.5 ml. of $CrSO_4$ soln. Then oxidize with $K_2Cr_2O_7$ soln. In an atm. of CO_2, titrate potentiometrically with a standardized soln. of $CeSO_4$. After the first break in the titration curve, corresponding to the reduction of $Cr_2O_7^{--}$, measure the vol. of reagent required to reduce Fe^{+3} to Fe^{+2}. Then add 0.7-0.8 g. of KBr and titrate further to reduce Cu^{+2} to Cu^{+}. Standardize the $CrSO_4$ soln. against $Fe_2(SO_4)_3$ soln. and against $CuSO_4$ potentiometrically. The results are satisfactory. E. I. C.

6

ASM-SLA METALLURGICAL LITERATURE CLASSIFICATION

APPROVED FOR RELEASE: 06/15/2000 CIA-RDP86-00513R001341920014-6"

"APPROVED FOR RELEASE: 06/15/2000 CIA-RDP86-00513R001341920014-6

*Potentiometric Methods for Determining Aluminium in Elektron-Type Magnesium Alloys. L. Ya. Polyak (*Zavod. Lab.*, 1946, **12**, (3), 268-275). [In Russian]. A method is described for determining Al by titration with NaF and another, very rapid, method by titration with NaOH. N. A.

ASM-SLA METALLURGICAL LITERATURE CLASSIFICATION

APPROVED FOR RELEASE: 06/15/2000 CIA-RDP86-00513R001341920014-6"

"APPROVED FOR RELEASE: 06/15/2000 CIA-RDP86-00513R001341920014-6

PROCESSES AND PROPERTIES INDEX

M

11

Potentiometric Determination of Iron and Copper in Duralumin-Type Alloys. L. Ya. Polyak (*Zavod. Lab.*, 1946, **12**, (11/12), 975-978).—[In Russian]. A description of the method.—N. A.

METALLURGICAL LITERATURE CLASSIFICATION

APPROVED FOR RELEASE: 06/15/2000 CIA-RDP86-00513R001341920014-6"

"APPROVED FOR RELEASE: 06/15/2000 CIA-RDP86-00513R001341920014-6

POLYAK, L. Ya.

180T70

USSR/Metals - Analysis, Aluminum Alloys Nov 50

"Potentiometric Determination of Zinc in Aluminum Alloys," L. Ya. Polyak

"Zavod Lab" No 11, pp 1299-1301

Possibility of binding large amt of aluminum into oxalate complex stable under conditions of zinc pptn has been established, thus making possible potentiometric detn of zinc in presence of aluminum as base of alloy. Two variations were developed: 1st variation based on detn of zinc in presence of aluminum only and 2d--in the presence of all, except copper, components of aluminum alloy. Accuracy of detn is ± 0.1%.

180T70

APPROVED FOR RELEASE: 06/15/2000 CIA-RDP86-00513R001341920014-6"

"APPROVED FOR RELEASE: 06/15/2000 CIA-RDP86-00513R001341920014-6

POLYAK, L. YA.

159T59

USSR/Metals - Alloys, Magnesium Jan 50
Potentiometers

"Potentiometric Method for Determination of Zinc in Magnesium Alloys," L. Ya. Polyak, F. M. Shemyakin, 5 pp

"Zavod Lab" Vol XVI, No 1

Demonstrates possibility of potentiometric determination of zinc with potassium ferrocyanide solution in presence of main components of magnesium alloys--magnesium, manganese and alminum-and also of cerium and zirconium. Method is entirely different from usual method based on

159T59

USSR/Metals - Alloys, Magnesium (Contd) Jan 50

separating zinc from all components of an alloy and its subsequent titration with potassium ferrocyanide. Develops two methods. Second one permits determination of small quantities of zinc. Analysis time is 40 min, accuracy ±0.02-0.03%.

159T59

APPROVED FOR RELEASE: 06/15/2000 CIA-RDP86-00513R001341920014-6"

"APPROVED FOR RELEASE: 06/15/2000 CIA-RDP86-00513R001341920014-6

CA

Potentiometric determination of zinc in aluminum alloys. L. Ya. Polyak. *Zavodskaya Lab.* 16, 1299-1301(1950).—Since large quantities of Al can be bound as oxalate complex which is stable to $K_4Fe(CN)_6$ under conditions of pptn. of Zn, it is possible to det. Zn potentiometrically in Al or Mg alloys. Two variations are given. Boil the soln. of the sample in 20% KOH to remove all H bubbles, dil. with hot H_2O to 150 ml., filter (2% hot KOH wash), and add 9 *N* H_2SO_4 to the hot filtrate until pptd. hydroxides dissolve, then 5 ml. in excess, add 50-60 ml. of satd. oxalic acid soln. and evap. to 150 ml. Heat to 75°, and titrate Zn potentiometrically with $K_4Fe(CN)_6$, after adding 15 drops dil. $K_4Fe(CN)_6$ (6 g. per l.). In the 2nd method dissolve the sample in hot 6 *N* H_2SO_4, filter off the insol. Cu, treat the filtrate at the b.p. with 0.05 *N* $KMnO_4$ until a stable pink color remains, add 50-60 ml. satd. oxalic acid and 30 ml. of satd. K_2SO_4 soln., heat to 75°, and titrate as above. G. M. Kosolapoff

APPROVED FOR RELEASE: 06/15/2000 CIA-RDP86-00513R001341920014-6"

"APPROVED FOR RELEASE: 06/15/2000 CIA-RDP86-00513R001341920014-6

POLYAK, L.YA.

Chemical Abstracts
Vol. 48 No. 5
Mar. 10, 1954
General and Physical Chemistry

The rate of reactions occurring in potentiometric titration. L. Ya. Polyak and B. N. Kabanov. *Zhur. Anal. Khim.* 8, 253-65(1953).—The rate of the electrochem. reaction $Fe(CN)_6^{---} \rightarrow Fe(CN)_6^{----}$ on a Pt electrode was studied as it is affected by the concn. of the salts themselves and by other electrolytes. Detns. were made at a polarizing current of 10^{-1}–10^{-2} amp./sq. cm. Following the immersion of the electrode in a soln. the equil. potential was noted., and then increasingly higher currents were passed. Curves were obtained for cathodic and anodic polarization. One series of curves was obtained for solns. contg. 1×10^{-2}–$1 \times 10^{-3}M$ ferricyanide and $1 \times 10^{-4}M$ ferrocyanide. Another set of curves was obtained for 2×10^{-3} and $2 \times 10^{-4}M$ ferricyanide and $2 \times 10^{-3}M$ ferrocyanide. Curves were obtained in solns. 0.05–1M with respect to H_2SO_4, in 1M H_2SO_4-0.2M K, in 0.2M K, and in solns. free of both H_2SO_4 and K. Curves were also obtained for solns. 0.56 and 0.54M with respect to Al and for solns. contg. the same concns. of Al but in which the Al was fixed as oxalate. Calcns. based on these curves show that in the system $Fe(CN)_6^{---} \rightarrow Fe(CN)_6^{----}$ the potential is established within seconds and that the slowness of potentiometric titration is attributable rather to the slowness of chem. reactions taking place in the body of the soln. The titration process was accelerated in the presence of H and K. Contrary to opinion found in the literature, Al salts do not affect the Pt electrode reducing its sensitivity. Al apparently reacts with $Fe(CN)_6^{---}$, forming sol. but nondissocg. complexes. Fixing Al as oxalate removed this difficulty. In strongly acid solns. the reaction taking place is $2H^+ + Fe(CN)_6^{---} + e \rightarrow H_2Fe(CN)_6^{--}$ rather than $Fe(CN)_6^{---} + e \rightarrow Fe(CN)_6^{----}$. Consequently the electrode potential is given by $\epsilon = \epsilon_0 + (RT/F) \ln \{[Fe(CN)_6^{---}][H^+]^2/[H_2Fe(CN)_6^{--}]\}$.

M. Hosch

APPROVED FOR RELEASE: 06/15/2000 CIA-RDP86-00513R001341920014-6"

"APPROVED FOR RELEASE: 06/15/2000 CIA-RDP86-00513R001341920014-6

L. Ya. Polyak

1181. **Rate of processes occurring during potentiometric titration.** I. Ya. Polyak and B. N. Kabanov (*J. Anal. Chem., U.S.S.R.*, 1953, 8 [5], 253-255).—The kinetics of the establishment of oxidation-reduction potentials in the system $Fe(CN)_6'''$ - $H_2Fe(CN)_6''$ on a platinum electrode are studied from polarisation curves and from determinations of change of potential with time. The rate of the titration is governed by the slow rate of chemical reaction in the soln. and not by the rate of establishment of potential, which is rapid. In strongly acid soln. the reaction is—

$$2H^{\cdot} + Fe(CN)_6''' + \epsilon \rightarrow H_2Fe(CN)_6''$$

and not

$$Fe(CN)_6''' + \epsilon \rightarrow Fe(CN)_6''''.$$

The electrode potential is determined by the equation—

$$\epsilon = \epsilon_0 + \frac{RT}{F} \log \frac{[Fe(CN)_6'''][H^{\cdot}]^2}{[H_2Fe(CN)_6'']}$$

The reaction is accelerated by $H^{\cdot}$ and $K^{\cdot}$. $Al^{\cdot\cdot\cdot}$ does not render the platinum electrode insensitive, as is usually supposed, but interferes with the titration through formation of only slightly dissociated Al ferrocyanide.

G. S. Smith

APPROVED FOR RELEASE: 06/15/2000 CIA-RDP86-00513R001341920014-6"

"APPROVED FOR RELEASE: 06/15/2000 CIA-RDP86-00513R001341920014-6

POLYAK, L. Ya.

Analysis of electrolyte baths by the potentiometric method with Trilon B. L. Ya. Polyak. *Zavodskaya Lab.* 21, 1300-1 (1955).—Ni bath electrolyte can be analyzed for Ni (within 0.2 mg.), Cu bath electrolyte for Cu (usually within 0.3 g./l.), Zn and Cd electrolytes for these metal ions (within 0.4 g./l.), by treatment of the neutralized soln. with NH_4OAc, followed by excess of 0.1*N* Trilon B, with back titration of the Trilon B with $FeCl_3$ potentiometrically. The Pt-calomel electrode pair was employed. G. M. K.

APPROVED FOR RELEASE: 06/15/2000 CIA-RDP86-00513R001341920014-6"

"APPROVED FOR RELEASE: 06/15/2000 CIA-RDP86-00513R001341920014-6

POLYAK, L. YA.

8

4E4j

3006. The potentiometric determination of lanthanum, cerium, praseodymium, neodymium and samarium. L. Ya. Polyak and F. M. Shemyakin. *Trudy Komiss. Anal. Khim., Akad. Nauk SSSR*, 1956, 7 (10), 276-288; *Ref. Zhur., Khim.*, 1957, Abstr. No. 12,061.—From a study of the pptn. reactions of Ce and La with $K_4Fe(CN)_6$ and Na oxalate, it is shown that they are hydrolytic pptn. reactions, and that therefore in the potentiometric titration it is possible to use any type of hydrogen electrode (quinhydrone, antimony, glass). The possibility is indicated of the potentiometric determination of Ce, La, Nd, Pr and Sm with NaOH soln. The influence of elements of the third analytical group and Mg on the potentiometric titration of Ce has been investigated.

C. D. Kopkin

APPROVED FOR RELEASE: 06/15/2000 CIA-RDP86-00513R001341920014-6"

"APPROVED FOR RELEASE: 06/15/2000 CIA-RDP86-00513R001341920014-6

POLYAK, L. YA.

7

9

titratio with Trilon B. B. N. Kabanov and L. Ya. Polyak. *Zhur. Anal. Khim.* 11, 678-85(1956).—A no. of metals were tested as electrodes in potentiometric noncompensating titration with Trilon B in ammoniacal solns. Only W and Mo were suitable. In pairs with Pt these metals acted as indicating electrodes while Pt acted as comparison electrode. Ba, Ca and Mg form stable complexes with Trilon B at pH ≥ 7 and the behavior of these electrodes in their titration was studied. $BaCl_2$ solns. (0.01 *N*) were titrated with 0.01 *N* Trilon B solns. and the excess of the latter was back titrated with $BaCl_2$. The electrodes used were Pt-W, W-calomel, and Pt-calomel. In the titration the Pt electrode potential remained const. while the potential of W shifted at the equiv. point to the neg. side. A study of this behavior lead to the conclusion that the W electrode polarized anodically. Thus, Trilon B affected only the anodic process. It was explained that Trilon B was adsorbed on W displacing O which in turn activated the electrode causing a shift to the neg. side. In the case of Mo, Trilon B depressed the overvoltage of the anodic process and did not affect the cathodic process of O ionization.

M. Hosch

Chem

RM MT

APPROVED FOR RELEASE: 06/15/2000 CIA-RDP86-00513R001341920014-6"

"APPROVED FOR RELEASE: 06/15/2000 CIA-RDP86-00513R001341920014-6

POLYAK, L. YA.

3831. Electrochemical behaviour of electrodes in potentiometric titrations with Trilon B (EDTA, disodium salt). B. N. Kabanov and L. Ya. Polyak. *Zhur. Anal. Khim.*, 1956, 11 (6), 678-685.—With Pt as reference electrode and W as indicator electrode the latter is polarised anodically during titration with EDTA in ammoniacal soln. It is supposed that EDTA molecules adsorbed on the surface of the electrode dislodge O and cause thereby the potential to become more negative. With Mo as indicator electrode, EDTA lowers the overvoltage for the anodic oxidation of Mo, but it has no effect on the cathodic process of ionisation of O.

G. S. Smith

APPROVED FOR RELEASE: 06/15/2000 CIA-RDP86-00513R001341920014-6"

"APPROVED FOR RELEASE: 06/15/2000 CIA-RDP86-00513R001341920014-6

POLYAK, L. Y. 9.

4 4E2C

390. Potentiometric determination of small amounts of barium in nickel-base alloys by means of EDTA (disodium salt). L. Ya. Polyak. *Zhur. Anal. Khim.*, 1957, 12 (2), 224–229.—The sample (1 g) is dissolved in HCl and the soln. is evaporated to 20 ml, then diluted to between 250 and 300 ml, kept hot for 1·5 to 2 hr. (most of the W, Nb and Ti is pptd.) and filtered. The filtrate, mixed with 10 ml of HCl and diluted to 300 ml, is treated at the b.p. with 5 ml of dil. H_2SO_4 (1:5), and the $BaSO_4$ is filtered off on the following day. The ppt. is treated on the filter with 0·1 *N* EDTA (disodium salt). The $BaSO_4$ does not react with the EDTA, but impurities of Ni, Cr, Al, Mn and Fe dissolve. The residue is ignited at 700° and then dissolved in 20 ml of an ammoniacal 0·01 *N* soln. of the EDTA. After sufficient time for the dissolution, the excess of EDTA is titrated potentiometrically with 0·01 *N* $BaCl_2$, with platinum-tungsten electrodes. Insoluble SiO_2, etc., is not filtered off as it does not interfere with the titration. The method is applicable to the determination of 0·05 to 0·5% of Ba.

G. S. SMITH

NS 1/1

APPROVED FOR RELEASE: 06/15/2000 CIA-RDP86-00513R001341920014-6"

"APPROVED FOR RELEASE: 06/15/2000 CIA-RDP86-00513R001341920014-6

AUTHORS: Kabanov, B. N., Polyak, L. Ya. SOV/75-13-5-6/24

TITLE: Electrochemical Behavior of Aluminum Electrode in the Process of Titration of an Aluminum Ion With Fluoride (Elektrokhimicheskoye povedeniye alyuminiyevogo elektroda pri titrovanii iona alyuminiya ftoridom)

PERIODICAL: Zhurnal analiticheskoy khimii, 1958, Vol 13, Nr 5, pp 538-544 (USSR)

ABSTRACT: Since 1948 also pairs of aluminum nichrome electrodes have been used as electrodes in the titration of aluminum ions with a solution of sodium fluoride (Refs 2-4). In these practical applications one had neither clarified the way these pairs of electrodes operate, the cause of the displacement in potential at the end point of titration, nor the influence of the cations and anions in the solution on the electrochemical behavior of the electrodes. These questions are the subject of the treatise under review. It was discovered that the potential displacement at the end point of titration is caused by a distinct change of the stationary potential of the aluminum electrode (indicator electrode); the potential of the nichrome electrode does not change during titration. In order to clarify the character

Card 1/3

APPROVED FOR RELEASE: 06/15/2000 CIA-RDP86-00513R001341920014-6"

"APPROVED FOR RELEASE: 06/15/2000 CIA-RDP86-00513R001341920014-6

SOV/75-13-5-6/24

Electrochemical Behavior of Aluminum Electrode in the Process of Titration of an Aluminum Ion With Fluoride

of the anodic and cathodic processes which determine the stationary potential of the aluminum electrode and its change in titration, polarization curves of the aluminum electrode in solutions of fluoride ions and in the presence of the ions Cl^-, CH_3COO^-, and SO_4^{2-} were established. These foreign ions were added in varying combinations and concentrations that correspond to the conditions in the titration of aluminum salts with fluorides. It turned out that the distinct potential displacement in the end point of titration in the direction of negative values is caused by the accelerated effect of the fluoride ions upon the anodic process of decomposing the aluminum (activation of the aluminum electrode). The fluoride ions have practically no influence upon the cathodic process (separation of hydrogen). Chlorine ions remove the entire passivation of aluminum by increasing the potential scope in which the fluoride ions are active. Acetate ions increase the sensitivity of the aluminum electrode toward fluoride ions. The cause for the potential displacement of the aluminum electrode

Card 2/3

APPROVED FOR RELEASE: 06/15/2000 CIA-RDP86-00513R001341920014-6"

"APPROVED FOR RELEASE: 06/15/2000 CIA-RDP86-00513R001341920014-6

Electrochemical Behavior of Aluminum Electrode in the Process of Titration of an Aluminum Ion With Fluoride SOV/75-13-5-6/24

at the end point of titration under the influence of fluoride ions is the same both in compensating as well as in non-compensating methods of titration. The limits of applicability of the non-compensating methods were established. They depend on the field of current density in which the fluoride ions have their activating influence on the aluminum electrode. In an experimental part the tests which were carried out are described. There are 7 figures and 6 references, 5 of which are Soviet.

ASSOCIATION: All-Union Scientific Research Institute of Aviation Materials

SUBMITTED: August 31, 1956

Card 3/3

APPROVED FOR RELEASE: 06/15/2000 CIA-RDP86-00513R001341920014-6"

"APPROVED FOR RELEASE: 06/15/2000 CIA-RDP86-00513R001341920014-6

ACC NR: AP6036389 SOURCE CODE: UR/0032/66/032/011/1317/1318

AUTHOR: Polyak, L. Ya.

ORG: none

TITLE: Photometric methods for determining zirconium and titanium in molybdenum alloys

SOURCE: Zavodskaya laboratoriya, v. 32, no. 11, 1966, 1317-1318

TOPIC TAGS: photometric analysis, zirconium, titanium, molybdenum containing alloy

ABSTRACT: The article describes a newly developed method for determining > 0.005% zirconium and > 0.01% titanium from the same weighed portion of a molybdenum alloy without separating the components of the alloy. Zirconium is determined by reaction with arsenazo III. A figure shows curves for the light absorption of arsenazo III and its complex compounds with zirconium. It is found that the optimum acidity for photometric determination is 2-6 N with respect to hydrochloric acid. With an increase of the acidity even up to 9 N, the optical density of the solutions decreases slightly. The complex compound of zirconium with arsenazo III is formed instantaneously and remains stable for a period of several days. Tungsten and titanium in the amount of from 1 to 10% in the alloy do not interfere with the determination of zirconium. Niobium reacts with arsenazo III with the formation of colored complexes. To eliminate the influence of niobium, it is bound with tartaric acid. Up to 2% niobium

Card 1/2

UDC: 543.4:535.24

APPROVED FOR RELEASE: 06/15/2000 CIA-RDP86-00513R001341920014-6"

"APPROVED FOR RELEASE: 06/15/2000 CIA-RDP86-00513R001341920014-6

L 29570-66 EWT(m)/EWP(t) IJP(c) JD/JG

ACC NR: AP6019492 SOURCE CODE: UR/0075/66/021/006/0682/0687

AUTHOR: Polyak, L. Ya.; Bashkirova, I. S.

ORG: none

TITLE: Titrimetric and photometric determination of molybdenum in niobium alloys by means of Complexon III

SOURCE: Zhurnal analiticheskoy khimii, v. 21, no. 6, 1966, 682-687

TOPIC TAGS: molybdenum determination, molybdenum niobium alloy, titration, photometry, Complexon III

ABSTRACT: Two methods have been developed for determining large amounts of Mo(5—50%) in Mo-Nb alloys. The methods are based on the capacity of pentavalent Mo to form stable yellow compounds with Complexon III [Sodium salt of EDTA]. The titrimetric method involves addition of an excess of Complexon III to an Mo-Nb alloy solution and back titration of Complexon III in an acetate medium. The titrant is cupric sulfate; the indicator is 1-(2-pyridylazo)-2-naphthol. The second method is photometric determination of Mo in the form of its compound with Complexon III. Niobium and other components of niobium alloys are masked with tartaric acid and sodium fluoride. The two methods yield reproducible results. The procedures are described in the source. Orig. art. has: 2 figures and 1 table. [BO]

SUB CODE: 07/ SUBM DATE: 09Oct64/ ORIG REF: 002/ OTH REF: 004/ ATD PRESS: 5015

Card 1/1 UDC: 543.70

APPROVED FOR RELEASE: 06/15/2000 CIA-RDP86-00513R001341920014-6"

"APPROVED FOR RELEASE: 06/15/2000 CIA-RDP86-00513R001341920014-6

POLYAK, L. Ya.

Photometric determination of titanium in niobium-based alloys by means of diantipyrylmethane. Zhur. anal. khim. 19 no.12: 1468-1470 '64 (MIRA 18:1)

APPROVED FOR RELEASE: 06/15/2000 CIA-RDP86-00513R001341920014-6"

"APPROVED FOR RELEASE: 06/15/2000 CIA-RDP86-00513R001341920014-6

POLYAK, L.Ya.; BASHKIROVA, I.S.

Photometric determination of zirconium in magnesium and aluminum alloys using quercetin. Zhur. anal. khim. 19 no.7:842-846 '64. (MIRA 17:11)

APPROVED FOR RELEASE: 06/15/2000 CIA-RDP86-00513R001341920014-6"

"APPROVED FOR RELEASE: 06/15/2000 CIA-RDP86-00513R001341920014-6

POLYAK, L.Ya.

Photometric determination of titanium in aluminum and molybdenum-based alloys by means of diantipyrylmethane. Zhur.anal.khim. 18 no.8:956-960 Ag '63. (MIRA 16:12)

APPROVED FOR RELEASE: 06/15/2000 CIA-RDP86-00513R001341920014-6"

"APPROVED FOR RELEASE: 06/15/2000 CIA-RDP86-00513R001341920014-6

POLYAK, L.Ya.

Photometric determination of titanium in nickel - and iron-based refractory alloys with the use of diantipyrylmethane. Zhur.anal.-khim. 17 no.2:206-211 Mr-Ap '62. (MIRA 15:4)
(Titanium--Analysis) (Alloys)

APPROVED FOR RELEASE: 06/15/2000 CIA-RDP86-00513R001341920014-6"

"APPROVED FOR RELEASE: 06/15/2000 CIA-RDP86-00513R001341920014-6

POLYAK, L.Ya.

Photocolorimetric determination of calcium in magnesium alloys with the arsenazo reagent. Zav.lab. 27 no.7:803-806 '61. (MIRA 14:7)

(Calcium--Analysis) (Magnesium alloys)

APPROVED FOR RELEASE: 06/15/2000 CIA-RDP86-00513R001341920014-6"

"APPROVED FOR RELEASE: 06/15/2000 CIA-RDP86-00513R001341920014-6

POLYAK, L.Ya.

Colorimetric reaction for iron with diantipyrylmethane. Zav. lab. 27 no. 4:388-389 '61. (MIRA 14:4)
(Iron--Analysis)

APPROVED FOR RELEASE: 06/15/2000 CIA-RDP86-00513R001341920014-6"

"APPROVED FOR RELEASE: 06/15/2000 CIA-RDP86-00513R001341920014-6

POLIAK, L. IA.

L. Ia. Poliak. Potentiometric determination of zinc in aluminum alloys. P. 1209

SO: Industrial Laboratory (USSR) 16, No. 11 (Nov. 1950)

APPROVED FOR RELEASE: 06/15/2000 CIA-RDP86-00513R001341920014-6"

"APPROVED FOR RELEASE: 06/15/2000 CIA-RDP86-00513R001341920014-6

POLYAK, L. Ya.

5(2) PHASE I BOOK EXPLOITATION SOV/3224

Mukhina, Zinaida Stepanovna, Yekaterina Ivanovna Nikitina, Lidiya Mitrofanovna Budanova, Raisa Samuilovna Volodarskaya, Lyudmila Yakovlevna Polyak, and Anna Aleksandrovna Tikhonova

Metody analiza metallov i splavov (Methods of Analysis of Metals and Alloys) Moscow, Oborongiz, 1959. 527 p. Errata slip inserted. 8,050 copies printed.

Ed. of Publishing House: T. M. Kunyavskaya; Tech. Ed.: V. P. Rozhin.

PURPOSE: This book is intended for laboratory technicians of plants and may also be of use to personnel of chemical and analytic laboratories of scientific institutions and schools of higher education.

COVERAGE: The book reviews various methods of analyzing steel, cast iron, complex iron, chromium-, nickel- and cobalt-base alloys. It also reviews methods of determining the content of elements in aluminum, magnesium and copper alloys as well as in various binary alloys. Principles of physical and chemical analysis for

Card 1/14

APPROVED FOR RELEASE: 06/15/2000 CIA-RDP86-00513R001341920014-6"

"APPROVED FOR RELEASE: 06/15/2000 CIA-RDP86-00513R001341920014-6

metallurgical studies are briefly explained, and laboratory equipment used for this kind of analysis is described and illustrated. Methods of analysis are grouped according to the type of alloy being analyzed. Each method is described and its accuracy, theoretical basis and procedure are indicated. The application of chromatographic separation in analyzing various metal alloys is explained. The appendix contains the description of various titration solutions, the reactivation of solutions and tables indicating weights of substances used in acidimetry as well as certain oxidizers, reducing agents, conversion coefficients, atomic weights of elements, etc. V. Ye. Bukhtiarov and D. V. Romanov wrote the part entitled "Methods of Chromatographic Analysis". There are 118 references: 108 Soviet, 4 German, 3 English 2 Czech and 1 French.

TABLE OF CONTENTS:

Foreword 3

Ch. I. Principles of Physicochemical Analysis 5
Part A. Colorimetric analysis 5

APPROVED FOR RELEASE: 06/15/2000 CIA-RDP86-00513R001341920014-6"

"APPROVED FOR RELEASE: 06/15/2000 CIA-RDP86-00513R001341920014-6

Methods of Analysis of Metals and Alloys SOV/3224

Part B. Potentiometric analysis 22
Part C. Polarographic and amperometric analysis 28
Part D. Chromatographic analysis 51
Part E. Organic reagents 53

Ch. II. Analysis of Steel and Cast Iron 62
Part A. Analysis of steel 62
General information 62
Instructions for selecting a sample for chemical analysis 62
Determination of carbon 63
Determination of sulfur 72
Determination of phosphorus 80
Determination of silicon 86
Determination of manganese 91
Determination of chromium 95
Determination of nickel 100
Determination of cobalt 105
Determination of copper 109
Determination of vanadium 114

Card 3/14

APPROVED FOR RELEASE: 06/15/2000 CIA-RDP86-00513R001341920014-6"

"APPROVED FOR RELEASE: 06/15/2000 CIA-RDP86-00513R001341920014-6

Determination of titanium 120
Determination of tungsten 120
Determination of molybdenum 128
Determination of aluminum 133
Determination of niobium 142
Determination of tantalum 144
Determination of zirconium 146
Determination of beryllium 149
Determination of selenium 151
Determination of boron 152
Determination of tin 156
Determination of arsenic 158
Determination of lead 163
Part B. Analysis of cast iron 165
Determination of carbon content 166
Determination of silicon 166
Determination of manganese 167
Determination of sulfur 167
Determination of phosphorus 167
Determination of chromium 168
Determination of nickel 168

APPROVED FOR RELEASE: 06/15/2000 CIA-RDP86-00513R001341920014-6"

"APPROVED FOR RELEASE: 06/15/2000 CIA-RDP86-00513R001341920014-6

Determination of molybdenum 169
Determination of copper 169
Determination of titanium 170
Determination of vanadium 170
Determination of tungsten 170
Determination of magnesium 170
Determination of tellurium 174

Ch. III. Analysis of Heat Resistant Alloys 176
Part A. Determination of Major Components 176
Determination of carbon 176
Determination of manganese 177
Determination of tungsten 179
Determination of titanium 185
Determination of iron 187
Determination of vanadium 191
Determination of molybdenum 192
Determination of phosphorus 194
Determination of cobalt 201

APPROVED FOR RELEASE: 06/15/2000 CIA-RDP86-00513R001341920014-6"

"APPROVED FOR RELEASE: 06/15/2000 CIA-RDP86-00513R001341920014-6

Methods of Analysis of Metals and Alloys SOV/3224

Determination of nickel 203
Determination of boron 206
Determination of beryllium 207
Determination of niobium 209
Determination of aluminum 212
Determination of zirconium 218
Determination of calcium 219
Determination of copper 220
Determination of barium 221
Part B. Determination of admixtures 223
Determination of lead 224
Determination of bismuth 228
Determination of copper 231
Determination of cadmium 233
Determination of arsenic 235
Determination of antimony 237
Determination of tin 241
Determination of zinc 243

Ch. IV. Analysis of Ferroalloys 246
Sampling 246

Card 6/14

APPROVED FOR RELEASE: 06/15/2000 CIA-RDP86-00513R001341920014-6"

"APPROVED FOR RELEASE: 06/15/2000 CIA-RDP86-00513R001341920014-6

Analysis of ferrosilicon and metallic silicon 247
Analysis of ferrochrome and metallic chromium 252
Analysis of ferromolybdenum and metallic molybdenum 261
Analysis of ferrotitanium 269
Analysis of ferromanganese and of metallic manganese 276
Analysis of ferrovanadium 280
Analysis of ferrotungsten and metallic tungsten 284
Analysis of ferrophosphorus 287
Analysis of ferrotantalum-niobium alloys 289
Analysis of calcium-silicon 290

Ch. V. Analysis of Slags 292
Sampling 292
Part A. Analysis of ordinary slags 293
Part B. Analysis of slag containing fluorine 304
Part C. Analysis of special-type slags 306

Ch. VI. Analysis of Aluminum Alloys 312
Introduction 312

APPROVED FOR RELEASE: 06/15/2000 CIA-RDP86-00513R001341920014-6"

"APPROVED FOR RELEASE: 06/15/2000 CIA-RDP86-00513R001341920014-6

Methods of Analysis of Metals and Alloys SOV/3224

Part A. Determination of major components 313
Determination of copper 313
Determination of magnesium 321
Determination of manganese 331
Determination of iron 333
Determination of silicon 336
Determination of zinc 343
Determination of calcium 351
Determination of chromium 352
Determination of nickel 354
Determination of titanium 358
Determination of vanadium 361
Determination of molybdenum 361
Determination of beryllium 362
Determination of boron 367
Determination of zirconium 369
Determination of cerium and of other rare earth elements 371
Determination of silver 373
Determination of sodium 374
Determination of aluminic acid 375
Part B. Determination of admixtures 378

Card 8/14

APPROVED FOR RELEASE: 06/15/2000 CIA-RDP86-00513R001341920014-6"

"APPROVED FOR RELEASE: 06/15/2000 CIA-RDP86-00513R001341920014-6

Determination of tin 378
Determination of arsenic 381
Determination of antimony 384
Determination of lead 388

Ch. VII. Analysis of Magnesium Alloys 391
Introduction 391
Determination of aluminum 391
Determination of zinc 399
Determination of cadmium 403
Determination of copper 408
Determination of iron 411
Determination of silicon 413
Determination of manganese 419
Determination of nickel 421
Determination of zirconium 423
Determination of calcium 425
Determination of strontium 428

APPROVED FOR RELEASE: 06/15/2000 CIA-RDP86-00513R001341920014-6"

"APPROVED FOR RELEASE: 06/15/2000 CIA-RDP86-00513R001341920014-6

Methods of Analysis of Metals and Alloys SOV/3224

Determination of barium 428
Determination of cerium 429
Determination of bismuth 434
Determination of antimony 435
Determination of silver 436
Determination of lithium 438
Determination of beryllium 439
Determination of boron 441
Determination of chlorine 441
Determination of potassium 443
Determination of sodium 445
Determination of carbon 446
Analysis of mixed metal 447
Analysis of zirconium dioxide 448

Ch. VIII. Analysis of Copper Alloys 450
Introduction 450
Part A. Analysis of bronze of BrAZh, BrAZhMts, and BrAZhN manufacture 450
Determination of copper 451
Determination of aluminum 454

Card 10/14

APPROVED FOR RELEASE: 06/15/2000 CIA-RDP86-00513R001341920014-6"

"APPROVED FOR RELEASE: 06/15/2000 CIA-RDP86-00513R001341920014-6

Determination of iron 457
Determination of nickel 460
Determination of bismuth 460
Part B. Analysis of tin bronze and tin-lead bronze 461
Determination of tin 462
Determination of lead 464
Determination of phosphorus 465
Determination of iron 466
Determination of aluminum 467
Determination of antimony 467
Determination of bismuth 468
Part C. Analysis of antimonial bronze 469
Determination of antimony 469
Determination of copper, nickel and zinc from the same batch 473
Determination of bismuth 475
Part D. Analysis of beryllium bronze 476
Determination of beryllium 476
Determination of nickel 479

APPROVED FOR RELEASE: 06/15/2000 CIA-RDP86-00513R001341920014-6"

"APPROVED FOR RELEASE: 06/15/2000 CIA-RDP86-00513R001341920014-6

Part E. Analysis of chromous bronze 479
Determination of chromium 479
Determination of silicon 480
Determination of copper 480
Determination of aluminum 480
Determination of iron 481
Determination of magnesium 482
Part F. Analysis of different types of brass and TsAM10-5 and TsAM9-1.5 alloys 483
Determination of iron and lead from the same batch 484
Determination of phosphorus 484
Determination of arsenic 485
Determination of bismuth 486
Determination of zinc 486
Part G. Analysis of silver solder 488
Determination of silver 488
Determination of copper 489
Determination of nickel 489
Determination of zinc and cadmium 490
Part H. Analysis of binary alloys 491
Copper-manganese alloy 491

APPROVED FOR RELEASE: 06/15/2000 CIA-RDP86-00513R001341920014-6"

"APPROVED FOR RELEASE: 06/15/2000 CIA-RDP86-00513R001341920014-6

Copper-phosphorus alloy 491
Copper-cadmium alloy 492
Copper-cobalt alloy 493
Copper-bismuth alloy 493
Lead-bismuth alloy 494
Copper-silicon alloy 494
Part I. Application of chromatographic separation in analyzing copper alloys 496
Bronze of BrAZh manufacture 496
Beryllium bronze 500
Copper-iron alloy 501

Appendix I. Titration Solution 503

Appendix II. Equivalent Weight of Substances Most Frequently Used in Acidimetry 511

Appendix III. Equivalent Weights of Most Frequently Used Oxidizers 511

APPROVED FOR RELEASE: 06/15/2000 CIA-RDP86-00513R001341920014-6"

"APPROVED FOR RELEASE: 06/15/2000 CIA-RDP86-00513R001341920014-6

SOV/137-57-1-1625

Translation from: Referativnyy zhurnal. Metallurgiya, 1957, Nr 1, p 216 (USSR)

AUTHORS: Polyak, L. Ya., Shemyakin, F. M.

TITLE: On the Potentiometric Determination of Lanthanum, Cerium, Praseodymium, Neodymium, and Samarium (K voprosu o potentsiometricheskom opredelenii lantana, tseriya, prazeodima, neodima i samariya)

PERIODICAL: Tr. Komis. po analit. khimii, AN SSSR, 1956, Vol 7 (10), pp 276-288

ABSTRACT: It is established that Ce and La form $MeKFe(CN)_6$-type compounds with $[Fe(CN)_6]^{4-}$ and $Me_2(C_2O_4)_3$ with $[C_2O_4]^{2-}$, which can be determined by potentiometric titration using quinhydrone, antimony, and glass electrodes paired with saturated cathode electrolyte. Elements that are precipitated by the above reagents or form complex compounds with them impede the determination. The accuracy of the determination is equivalent to that of the gravimetric method of precipitating rare earths in the form of oxalates.

Z. G.

Card 1/1

APPROVED FOR RELEASE: 06/15/2000 CIA-RDP86-00513R001341920014-6"

"APPROVED FOR RELEASE: 06/15/2000 CIA-RDP86-00513R001341920014-6

GORELOVA, A.A.; POLYAK, L.Ya.

Potentiometric method for determining aluminum in heat-resistant nickel-base alloys. Zav.lab. 25 no.3:285-287 '59. (MIRA 12:4)
(Heat-resistant alloys) (Aluminum--Analysis)
(Potentiometric analysis)

APPROVED FOR RELEASE: 06/15/2000 CIA-RDP86-00513R001341920014-6"

"APPROVED FOR RELEASE: 06/15/2000 CIA-RDP86-00513R001341920014-6

SOV/32-25-6-9/53

5(2)

AUTHORS: Busev, A. I., Polyak, L. Ya.

TITLE: Determination of Cadmium in Magnesium Alloys With the Use of Nickel Diethyl Dithiophosphate (Opredeleniye kadmiya v magniyevykh splavakh s primeneniyem dietilditiofosfata nikelya)

PERIODICAL: Zavodskaya Laboratoriya, 1959, Vol 25, Nr 6, pp 668 - 669 (USSR)

ABSTRACT: A method was introduced, to be applied for the gravimetric as well as the volumetric determination of cadmium in magnesium alloys. Zn, Al, Ce, Zr et al may be present as well. The method is based on the precipitation of Cd with nickel diethyl dithiophosphate and the weighing of the precipitate $[(C_2H_5O)_2PSS]_2Cd$ or a titration of the precipitate with a 0.05 n iodine solution. The presence of Mg and of the abovementioned alloy elements of magnesium alloys does not disturb the determination (Table 1). The iodometric titration is based on the reaction:

$$[(C_2H_5O)_2PSS]_2Ni+J_2= (C_2H_5O)_2PSS - SSP(OC_2H_5)_2 + NiJ_2$$

and is considerably quicker than the gravimetric determination, the analytical accuracy being the same (Table 2). The course

Card 1/2

APPROVED FOR RELEASE: 06/15/2000 CIA-RDP86-00513R001341920014-6"

"APPROVED FOR RELEASE: 06/15/2000 CIA-RDP86-00513R001341920014-6

Determination of Cadmium in Magnesium Alloys With the Use of Nickel Diethyl Dithiophosphate SOV/32-25-6-9/53

of analysis is described. There are 2 tables and 2 Soviet references.

Card 2/2

APPROVED FOR RELEASE: 06/15/2000 CIA-RDP86-00513R001341920014-6"

"APPROVED FOR RELEASE: 06/15/2000 CIA-RDP86-00513R001341920014-6

5(2)

AUTHORS: Gorelova, A. A., Polyak, L. Ya. SOV/32-25-3-9/62

TITLE: Potentiometric Method of Determining Aluminum in Heat-resistant Alloys on a Nickel Basis (Potentsiometricheskiy metod opredeleniya alyuminiya v zharoprochnykh splavakh na nikelevoy osnove)

PERIODICAL: Zavodskaya Laboratoriya, 1959, Vol 25, Nr 3, pp 285 - 287 (USSR)

ABSTRACT: S. K. Chirkov (Ref 3) suggested a potentiometric method of titration of aluminum with sodium fluoride in a hydrochloric medium buffered with sodium acetate by using an Al-Ni/Cr electrode. On the basis of this suggestion a rapid method for the determination of aluminum in heat-resistant alloys on a nickel basis was devised without the necessity of separating aluminum. The two reactions $Al^{3+} + 6\ F^- \longrightarrow [AlF_6]^{3-}$ and $Al^{3+} + 3\ F^- \longrightarrow AlF_3$ were investigated and two varieties of titrations were carried out (Fig). It was found that Ti(III) (0.2 - 2.0%), Ti(IV) (up to 0.8%), Cr(III) (up to 14%),

Card 1/2

APPROVED FOR RELEASE: 06/15/2000 CIA-RDP86-00513R001341920014-6"