"APPROVED FOR RELEASE: 06/15/2000 CIA-RDP86-00513R001342520004-0

ACCESSION NR: AT4019284

and temperature was plotted, the temperature at which opalescence disappeared (785 C for a glass containing 14 mol. % Na_2O) was found to be inversely proportional to the Na and Li content. The intensity of small-angle x-ray scattering is an accurate indication of the heterogeneity of sodium and lithium silicate glass. The way in which this scattering varies with the composition and thermal treatment was investigated, and the critical temperature beyond which the heterogeneity increased with increasing temperature was determined. Whereas the mean square difference of the electron densities decreases regularly with the Li_2O content, in the case of sodium it first increases, reaching a maximum at about 11.5 mol. % Na_2O. "The authors thank Ye. V. Podushko for fusing the glass containing 5-10 mol. % Na_2O in a high-frequency electric furnace." Orig. art. has: 6 figures, 1 table and 6 formulas.

ASSOCIATION: none

SUBMITTED: 17May63 DATE ACQ: 21Nov63 ENCL: 00

SUB CODE: MT NO REF SOV: 013 OTHER: 006

Card 2/2

APPROVED FOR RELEASE: 06/15/2000 CIA-RDP86-00513R001342520004-0"

"APPROVED FOR RELEASE: 06/15/2000 CIA-RDP86-00513R001342520004-0

S/181/63/005/001/039/064
B108/B180

AUTHORS: Vaypolin, A. A., and Poray-Koshits, Ye. A.

TITLE: Structure of vitreous arsenic chalcogenides. Corrections to the radial distribution curves

PERIODICAL: Fizika tverdogo tela, v. 5, no. 1, 1963, 246 - 255

TEXT: In an earlier study (FTT, 2, 7, 1656, 1960) experimental X-ray scattering curves were taken for a series of glasses of the system arsenic sulfide-selenide-telluride. Here the radial distribution curves are improved in order to gain more information on structural variations of these glasses with composition. The most probable of several intensity curves was taken for each glass to calculate the radial distribution curves of the electron density. To improve these the distribution of the atom-electron density was also calculated. The variation in interatomic spacing with composition is not linear and that in coordination numbers is only slight, and not monotonic. The former, however, is not due to diffraction error. Corrections are introduced for the dispersion of the K electrons, in the form of scale factors in the radial distribution curves. These corrections leave the interatomic spacing unchanged and slightly reduce the coordination

Card 1/2

APPROVED FOR RELEASE: 06/15/2000 CIA-RDP86-00513R001342520004-0"

"APPROVED FOR RELEASE: 06/15/2000 CIA-RDP86-00513R001342520004-0

S/181/63/005/001/040/064
B108/B180

AUTHORS: Vaypolin, A. A., and Poray-Koshits, Ye. A.

TITLE: Structure of vitreous arsenic chalcogenides. Vitreous and crystalline states in the system As_2Se_3-As_2Te_3

PERIODICAL: Fizika tverdogo tela, v. 5, no. 1, 1963, 256 - 262

TEXT: The powder patterns of As_2Se_3-As_2Te_3 samples show that the structure changes gradually with the composition. There are two crystalline modifications around $As_2Se_3 \cdot As_2Te_3$. For crystalline As_2Se_3 and the high-temperature $As_2Se_3 \cdot As_2Te_3$ modification the radial distribution curves calculated from the scattered-intensity curves are very similar to those of the corresponding glasses. The curve for the low-temperature modification, which has higher symmetry, differs both in position and in the height of its peaks. The structure of the low-temperature modification is a very close packing of Se^{-2} and Te^{-2} ions with two thirds of the octahedral sites occupied by arsenic ions. Crystalline As_2Se_3 belongs to the space group

Card 1/3

APPROVED FOR RELEASE: 06/15/2000 CIA-RDP86-00513R001342520004-0"

"APPROVED FOR RELEASE: 06/15/2000 CIA-RDP86-00513R001342520004-0

$P2_1$ with eight molecules in one elementary cell (a = 9.900, b = 12.080, c = 8.576 Å); its structure is shown in the figure. Glasses of the system As_2Se_3-As_2Te_3 crystallize on heating and the crystallization rate rises with Te content. The low-temperature modification crystallizes at 130 - 150°C after several hours. The high-temperature modification crystallizes at 200°C in a few minutes with texturization. Several physical properties do not change with structure. There is 1 figure.

ASSOCIATION: Institut khimii silikatov AN SSSR, Leningrad (Institute of Silicate Chemistry AS USSR, Leningrad)

SUBMITTED: August 7, 1962

APPROVED FOR RELEASE: 06/15/2000 CIA-RDP86-00513R001342520004-0"

"APPROVED FOR RELEASE: 06/15/2000 CIA-RDP86-00513R001342520004-0

S/181/63/005/002/047/051
B102/B186

AUTHORS: Vaypolin, A. A., and Poray-Koshits, Ye. A.

TITLE: Structure models of glasses and the structures of crystalline chalcogenides

PERIODICAL: Fizika tverdogo tela, v. 5, no. 2, 1963, 683 - 687

TEXT: The results of X-ray analyses of vitreous and crystalline arsenic chalcogenides are used to determine the effects of composition on structure. The following is found: When light atoms in glass are replaced by heavier ones packing becomes more compact and more symmetric than would follow from the changes in physical properties. In studies of the radical distribution curves it was found that the composition-induced changes in structure occur nonmonotonically. In polycrystalline samples of the system As_2Se_3-As_2Te_3 there exists a certain region with two crystalline modifications and a nonmonotonic change in structure of the low-temperature phase is observed; it is attributed to a nonmonotonic change in bond character. The increase in ionic bonds that occurs in vitreous or crystalline phases on approaching to the middle between the initial binary compositions is explained by

Card 1/2

APPROVED FOR RELEASE: 06/15/2000 CIA-RDP86-00513R001342520004-0"

"APPROVED FOR RELEASE: 06/15/2000 CIA-RDP86-00513R001342520004-0

L 13383-63 EPR/EWT(1)/EWP(q)/EWT(m)/BDS AFFTC/ASD Ps-4/Pq-4 WW/WH

ACCESSION NR: AP3002744 S/0120/63/000/003/0155/0160

AUTHOR: Goganov, D.A.; Poray-Koshits, Ye. A.; Sokolov, Yu. G.

68

TITLE: Small-angle chamber with a proportional x-ray counter 21

67

SOURCE: Pribory* i tekhnika eksperimenta, no. 3, 1963, 155-160

TOPIC TAGS: small-angle chamber, x-ray counter

ABSTRACT: A new demountable proportional counter 19 of x-ray quanta and a special small-angle chamber are described. Two counter versions, argon-filled and xenon-filled, were built and operated in conjunction with a calcium purifier. The counter pulses were fed to a USh-2 amplifier (overall gain 3×10^5), thence to a single-channel kick sorter, and finally to a scaler. The steel chamber enclosed a 100-micron-wide collimator and had 0.25-mm-thick inlet and outlet beryllium windows. The outfit was used for determining diffraction patterns of sodium-borosilicate and lithium-silicate glass that contained micro-inhomogeneities. The counter and chamber constructions, a functional block-diagram, and small-angle dispersion characteristics are presented.

ASSN: Inst. of Chemistry of Silicates, AN SSSR

Card 1/21

APPROVED FOR RELEASE: 06/15/2000 CIA-RDP86-00513R001342520004-0"

"APPROVED FOR RELEASE: 06/15/2000 CIA-RDP86-00513R001342520004-0

PORAY-KOSHITS, Ye.A., otv. red.; YEVSTROP'YEV, K.S., red.; KONDRAT'YEV, Yu.N., red.; LEBEDEV, A.A., red.; MAZURIN, O.V., red.; MOLCHANOV, V.S., red.; PETROVSKIY, G.T., red.; POZUBENKOV, A.F., red.; TOROPOV, N.A., red.; CHEBOTAREVA, T.Ye., red.; YAKHKIND, A.K., red.

[Vitreous state; transactions] Stekloobraznoe sostoianie; trudy. Moskva, Nauka, 1965. 439 p. (MIRA 18:7)

1. Vsesoyuznoye soveshchaniye po stekloobraznomu sostoyaniyu. 4th, Leningrad, 1964.

APPROVED FOR RELEASE: 06/15/2000 CIA-RDP86-00513R001342520004-0"

"APPROVED FOR RELEASE: 06/15/2000 CIA-RDP86-00513R001342520004-0

AVERYANOV, V. I.; PORAY-KOSHITS, Ye. A.

"Chemical separation and crystallization of some binary silicate glasses."

report submitted to 3rd European Regional Conf, Electron Microscopy, Prague, 26 Aug-3 Sep 64.

APPROVED FOR RELEASE: 06/15/2000 CIA-RDP86-00513R001342520004-0"

"APPROVED FOR RELEASE: 06/15/2000 CIA-RDP86-00513R001342520004-0

ANDREYEV, N. S.; AVERYANOV, V. I.; PORAY-KOSHITS, Ye. A.

"The critical phenomena in sodium silicate glasses."

report submitted for Intl Conf on Physics of Non-Crystalline Solids, Delft, Netherlands, 6-10 Jul 64.

Grebenshchikov Inst for Silicate Chemistry, AS, Leningrad.

APPROVED FOR RELEASE: 06/15/2000 CIA-RDP86-00513R001342520004-0"

"APPROVED FOR RELEASE: 06/15/2000 CIA-RDP86-00513R001342520004-0

PORAY-KOSHITS, Ye. A.

"Crystallochemical aspects of inorganic glass structure."

report submitted for 4th All-Union Conf on Structure of Glass, Leningrad 16-21 Mar 64.

~~Sci Director, Inst Silicate Chemistry~~. ?

APPROVED FOR RELEASE: 06/15/2000 CIA-RDP86-00513R001342520004-0"

"APPROVED FOR RELEASE: 06/15/2000 CIA-RDP86-00513R001342520004-0

PORAY-KOSHITS, Ye. A. and GALAKHOV, F. Ya.

"Theory of formation and structure of sitalls and crystallization of glasses."

(Institute of Silicate Chemistry, Academy of Sciences USSR)

At the Division of Physical Chemistry and Technology of Inorganic Materials, Acad. Sci. USSR, a scientific council on the problem of sitalls has been established. The Council is a coordinating body for basic scientific research on sitalls, glass, fiber glass, stoneware, refractory and superrefractory materials, and coatings. The purpose of the Council is primarily to contribute to the improvement of the strength and impact resistance of existing materials. In 1963, the council held two sessions.

(Steklo i keramika, no. 6, 1964, 48-49)

APPROVED FOR RELEASE: 06/15/2000 CIA-RDP86-00513R001342520004-0"

"APPROVED FOR RELEASE: 06/15/2000 CIA-RDP86-00513R001342520004-0

PORAY-KOSHITS, Ye. A.; GOBANOV, D. A.; AVERYANOV, V. I.

"Studying of supermolecular structures of silicate glasses by direct methods.

report submitted for Intl Conf on Physics of Non-Crystalline Solids, Delft, Netherlands, 6-10 Jul 64.

Grebenshchikov Inst for Silicate Chemistry, AS, Leningrad.

APPROVED FOR RELEASE: 06/15/2000 CIA-RDP86-00513R001342520004-0"

"APPROVED FOR RELEASE: 06/15/2000 CIA-RDP86-00513R001342520004-0

L 16643-65 EWT(m)/EWP(e)/EWP(b) Pq-4 ESD(t)/ESD(gs)/SSD/AFWL/ASD(a)-5
ACCESSION NR: AP5000160 WH S/0032/64/030/012/1473/1475

AUTHORS: Aver'yanov, V. I.; Poray-Koshits, Yu. A.

TITLE: Electron microscopic studies of surfaces with great relief

SOURCE: Zavodskaya laboratoriya, v. 30, no. 12, 1964, 1473-1475

TOPIC TAGS: electron microscopy, crystallization, glass

ABSTRACT: The structure of crystallized glass may be studied successfully in a single step. The surface of a fragment, etched in weak HFl, is sputtered simultaneously with platinum and carbon at some acute angle, one to the other. The replicas are then removed. Experimental study was made of a glass in the system Li_2O-SiO_2, and the sputtering was done by the method of D. E. Bradley (Brit. J. Appl. Phys., 5, 2, 1954), with the sample rotating at about 1000 r.p.m. while simultaneously swinging at right angles with a frequency of about 60 cycles per minute. Replicas obtained in this way are stronger than those obtained on fixed samples. The replicas are removed by immersion in 10% HFl, and may be reinforced with paraffin if necessary. Several electron photomicrographs are shown for different thermal treatments. The crystallization process in glass may be observed very well by studies of the indicated type. Orig. art. has: 4 figures.

Card 1/2

APPROVED FOR RELEASE: 06/15/2000 CIA-RDP86-00513R001342520004-0"

"APPROVED FOR RELEASE: 06/15/2000 CIA-RDP86-00513R001342520004-0

L 16643-65
ACCESSION NR: AP5000160

ASSOCIATION: Institut khimii silikatov im. I. V. Grebenshchikova, Akademii nauk SSSR (Institute of Silicate Chemistry, Academy of Sciences SSSR)

SUBMITTED: 00 ENCL: 00

SUB CODE: OP, MT, SS NO REF SOV: 001 OTHER: 003

Card 2/2

APPROVED FOR RELEASE: 06/15/2000 CIA-RDP86-00513R001342520004-0"

"APPROVED FOR RELEASE: 06/15/2000 CIA-RDP86-00513R001342520004-0

TOROPOVA, N.A., red.; PORAY-KOSHITSA, Ye.A., red.

[Structural transformations in glass at high temperatures] Strukturnye prevrashcheniia v steklakh pri povyshennykh temperaturakh. Moskva, Nauka, 1965. 259 p. (MIRA 18:1)

1. Akademiya nauk SSSR. Institut khimii silikatov.

APPROVED FOR RELEASE: 06/15/2000 CIA-RDP86-00513R001342520004-0"

"APPROVED FOR RELEASE: 06/15/2000 CIA-RDP86-00513R001342520004-0

L 11842-66 EWT(m)/EWP(e)/EWP(b) GS/WH

ACC NR: AT6000473 SOURCE CODE: UR/0000/65/000/000/0098/0100

AUTHOR: Aver'yanov, V. I.; Poray-Koshits, Ye. A.

ORG: None

TITLE: Electron-microscopic study of phase separation in glasses of the lithia-silica system

SOURCE: Vsesoyuznoye soveshchaniye po stekloobraznomu sostoyaniyu. 4th, Leningrad, 1964. Stekloobraznoye sostoyaniye (Vitreous state); trudy soveshchaniya. Leningrad, Izd-vo Nauka, 1965, 98-100

TOPIC TAGS: lithium glass, glass property, silicate glass, electron microscopy, crystallization

ABSTRACT: Glasses of the Li_2O-SiO_2 system containing 12—38 mole % Li_2O were studied. The glasses were subdivided into opalescent ones, containing less than 33.3% Li_2O (group I), and nonopalescent ones, containing more than 33.3% Li_2O (group II). Glasses of group I separate into two phases, one of which is close in composition to SiO_2, and the other to $Li_2O \cdot 2SiO_2$. The observed behavior of the glasses in heat treatment is consistent with the concept according to which phase separation is a phase process developing below the liquidus and solidus curves. Liquation of lithium silicate glasses is metastable and develops as an independent process interrupted by the crystallization of the alkali-rich phase. The microstructure (microheterogeneity) of the glasses is discussed in relation to the phase

Card 1/2

APPROVED FOR RELEASE: 06/15/2000 CIA-RDP86-00513R001342520004-0"

"APPROVED FOR RELEASE: 06/15/2000 CIA-RDP86-00513R001342520004-0

L 11843-66 EWT(1)/EWP(e)/EWT(m)/EWP(b) LHB/GS/WH

ACC NR: AT6000474 SOURCE CODE: UR/0000/65/000/000/0100/0104

44,55 44,55 44 41 B+1

AUTHOR: Goganov, D. A.; Poray-Koshits, Ye. A.

ORG: None

TITLE: Chemically inhomogeneous structure of some silicate glasses as determined by the small-angle x-ray scattering method

SOURCE: Vsesoyuznoye soveshchaniye po stekloobraznomu sostoyaniyu. 4th, Leningrad, 1964. Steklcobraznoye sostoyaniye (Vitreous state); trudy soveshchaniya. Leningrad, Izd-vo Nauka, 1965, 100-104

TOPIC TAGS: lithium glass, borate glass, silicate glass, x ray scattering

ABSTRACT: The most important parameter characterizing the inhomogeneous structure of samples in the small-angle x-ray scattering method is the mean square difference between the electron densities of the inhomogeneous regions, $(\Delta p)^2$. This quantity quantitatively determines the degree of inhomogeneity of samples. The authors determined the values of $(\Delta p)^2$ for soda-silica and lithia-silica glass at various contents of Na_2O and Li_2O. As the alkali content rises, $(\Delta p)^2$ decreases, i.e., the glasses become increasingly more homogeneous, but the data do not indicate at what composition they should become completely homogeneous. The temperature dependence of $(\Delta p)^2$ was found to be pronounced. As the radius of the alkali metal cation increases, $(\Delta p)^2$ decreases. Results obtained with three-component glasses containing various amounts of SiO_2, B_2O_3, and Na_2O, and glasses containing SiO_2,

Card 1/2

APPROVED FOR RELEASE: 06/15/2000 CIA-RDP86-00513R001342520004-0"

"APPROVED FOR RELEASE: 06/15/2000 CIA-RDP86-00513R001342520004-0

L 15169-66 EWP(e)/EWT(m)/EWP(b) WH
ACC NR: AP6002418 (A) SOURCE CODE: UR/0020/65/165/005/1037/1040

AUTHOR: Goganov, D. A.; Poray-Koshits, Ye. A.

ORG: Institute of Chemistry of Silicate im. A. V. Grebenschikov, Academy of Sciences, SSSR (Institute khimii silikatov Akademii nauk SSSR)

TITLE: Change in the supermolecular structure of sodium-silicate glass when it is heated

SOURCE: AN SSSR. Doklady, v. 165, no. 5, 1965, 1037-1040

TOPIC TAGS: silicate glass, x ray scattering, molecular structure, heating

ABSTRACT: The method of x-ray scattering at small angles was used in glass with 14 mol% Na_2O heated in a gradient furnace in the 570-790° temperature range for 2.5 hours in order to study the supermolecular (submicroscopic) structure of sodium-silicate glass as a function of heat treatment. One glass specimen was heated for one-half hour to study the degree of structurization. The specimens were air-cooled, ground to a thickness of 0.2 mm and curves for the intensity of x-ray scattering at small angles were plotted for 30 points throughout the temperature interval. The

Card 1/3 UDC: 539.213:539.26+54-161.6

APPROVED FOR RELEASE: 06/15/2000 CIA-RDP86-00513R001342520004-0"

"APPROVED FOR RELEASE: 06/15/2000 CIA-RDP86-00513R001342520004-0

L 15169-66
ACC NR: AP6002418

curves were corrected to conform with experimental conditions, and the following structural characteristics of the glass were calculated: 1) radii of the spherical regions of nonhomogeneities; 2) the generalized area of the interface between these regions and the surrounding matrix; and 3) the mean square fluctuation in electron density for points where the radii of the spherical nonhomogeneous regions are no greater than 300 Å. In the region from 580 to 710°, the radii of the nonhomogeneous regions increased with temperature from 115 to 730 Å. Between 710 and 770°, the x-ray scattering curves show two types of regions: one with maximum radii of 730 Å and the other with radii of less than 100 Å. Only one type of region was observed above temperatures of 770° with radii of very close to 90 Å. When the glass was heated in a gradient furnace for one-half hour, the dimensions of nonhomogeneous regions at approximately 600° were noticeably smaller. This difference decreased with an increase in temperature, which is due to a reduction in the viscosity of the glass and acceleration of diffusion processes. Curves are given showing the logarithm of x-ray scattering intensity as a function of the logarithm of the scattering angle. These curves show a linear relationship with a slope of -3, a gradual increase in the size of the regions with an increase in temperature of 575 to 710°, the appearance and development of a bidisperse structure (727 and 765°), a gradual reduction in the number of large regions without any change in their dimensions and

Card 2/3

APPROVED FOR RELEASE: 06/15/2000 CIA-RDP86-00513R001342520004-0"

"APPROVED FOR RELEASE: 06/15/2000 CIA-RDP86-00513R001342520004-0

L 15169-66
ACC NR: AP6002418

an increase in the number of small regions, and finally a disappearance of the large regions while the small regions remain (780°). The generalized surface of the interface between the nonhomogeneous regions and the surrounding matrix decreases as the temperature is raised. At 770° the area of the interface is extremely small, but a further increase in temperature causes a sharp jump in this area to values which indicate a generalized interface for small nonhomogeneity regions. Curves are given showing the changes in the parameters studied when the glass is heated in the temperature interval from 575 to 790°. The dissimilarity in the slopes of the curves for the radii of the nonhomogeneous regions and the area of the interface indicates that changes in the supermolecular structure of the glass are due mainly to an enlargement in the regions of nonhomogeneity without any noticeable change in their composition or total volume. Orig. art. has: 2 figures.

SUB CODE: 11,20/ SUBM DATE: 15Apr65/ ORIG REF: 009/ OTH REF: 000

Card 3/3 BC

APPROVED FOR RELEASE: 06/15/2000 CIA-RDP86-00513R001342520004-0"

"APPROVED FOR RELEASE: 06/15/2000 CIA-RDP86-00513R001342520004-0

L 26040-66 EWT(m)/EWP(e) WH

ACC NR: AP6013895 SOURCE CODE: UR/0020/66/167/006/1266/1268

45
B

AUTHOR: Goganov, D. A.; Poray-Koshits, Ye. A.

ORG: Institute of Chemistry of Silicates im. I. V. Grebenshchikov (Institut khimii silikatov)

TITLE: Liquation characteristics of the chemically nonhomogeneous structure of low-alkali sodium silicate glasses

SOURCE: AN SSSR. Doklady, v. 167, no. 6, 1966, 1266-1268

TOPIC TAGS: silicate glass, electron density, glass liquation

ABSTRACT: A collimation system with high resolution is used for determining the mean square value of fluctuations in electron density for low-alkali sodium silicate glasses up to the liquation temperature. Experimental and theoretical curves are given showing the mean square value of fluctuations in electron density as a function of composition in these glasses at various temperatures. The experimental and theoretical data show satisfactory agreement. When the glass is cooled, it passes quickly through the liquation region and stratifies with the formation of a fine structure which may be combined with a coarse structure. It was experimentally found that the radii of nonhomogeneous regions and the mean square fluctuation in electron density which characterize the glass structure are considerably dependent upon cooling rate.

UDC: 666.1:542.65

Card 1/2

APPROVED FOR RELEASE: 06/15/2000 CIA-RDP86-00513R001342520004-0"

"APPROVED FOR RELEASE: 06/15/2000 CIA-RDP86-00513R001342520004-0

L 26040-66

ACC NR: AP6013895

The results of the work support the hypothesis of a liquation origin for high-temperature fine structure as opposed to the fluctuation hypothesis proposed by Filipovich (V. N. Filipovich, Collection, Structural Transformations in Glasses at High Temperatures, Nauka, 1965). Orig. art. has: 3 figures.

SUB CODE: 11/ SUBM DATE: 10Jul65/ ORIG REF: 011/ OTH REF: 000

Card 2/2

APPROVED FOR RELEASE: 06/15/2000 CIA-RDP86-00513R001342520004-0"

"APPROVED FOR RELEASE: 06/15/2000 CIA-RDP86-00513R001342520004-0

LOKSHIN, E.Yu., doktor ekon. nauk; ANDREYEVA, O.I., kand. ekon. nauk, dots.; VOROSHILOVA, T.S., kand. ekon. nauk, dots.; SADOMTSEV, V.K., kand. ekon. nauk, dots.; SMIRNOV, P.V., kand. ekon. nauk, dots.; TARAS'YANTS, R.B., kand. ekon. nauk, dots.; FASOLYAK, N.D., kand. ekon. nauk, dots.; LOZOV, Ya.D., st. prepod.; SHMELEVA, Z.S., st. prepod.; NOVIKOV, D.T., aspirant; PORA-LEONOVICH, B.N.; ALEKSANDROVSKIY, V.V.; BURSHTEYN, I.I.; EYDEL'MAN, B.I., red.; MOZGALEVSKAYA, S.A., mlad. red.; GERASIMOVA, Ye.S., tekhn. red.

[Manual for the supplying and selling of materials and equipment] Spravochnik po material'no-tekhnicheskomu snabzheniiu i sbytu. Moskva, Ekonomizdat, 1963. 344 p. (MIRA 17:1)

1. Nachal'nik ekonomicheskogo otdela Upravleniya material'no-tekhnicheskogo snabzheniya Soveta narodnogo khozyaystva Moskovskogo gorodskogo ekonomicheskogo rayona (for Pora-Leonovich).
2. Nachal'nik otdela snabzheniya 1-go Gosudarstvennogo podshipnikovogo zavoda (for Aleksandrovskiy).

APPROVED FOR RELEASE: 06/15/2000 CIA-RDP86-00513R001342520004-0"

"APPROVED FOR RELEASE: 06/15/2000 CIA-RDP86-00513R001342520004-0

POLAND / Chemical Technology. Natural and Synthetic Caoutchouc. Rubber. H-31

Abs Jour: Ref Zhur-Khimiya, No 23, 1958, 79752.

Author : ~~Porayski, T.~~
Inst : Not given.
Title : The Mechanism and Causes for the Elasticity and Plasticity in the Elongation of Rubber.

Orig Pub: Przem. chem., 1957, 13, No 5, 256-258.

Abstract: A review with ten references.

Card 1/1

APPROVED FOR RELEASE: 06/15/2000 CIA-RDP86-00513R001342520004-0"

"APPROVED FOR RELEASE: 06/15/2000 CIA-RDP86-00513R001342520004-0

PORAZHENKO, F.F.

AGALINA, M.S., inzh.; AKUTIN, T.K., inzh.; APRESOV, A.M., inzh.; ARISTOV, S.S., kand. tekhn. nauk,; BELOSTOTSKIY, O.B., inzh.; BERLIN, A.Ye.,inzh.; BESSKIY, K.A., inzh.; BLYUM, A.M., inzh.; BRAUN, I.V., inzh.; BRODSKIY, I.A., inzh.; BURAKAS, A.I.,inzh.; VAYNMAN, I.Z., inzh.; VARSHAVSKIY, I.N.,inzh.; VASIL'YEVA, A.A.,inzh.; VORONIN, S.A.,inzh.; VOYTSEKHOVSKIY, L.K., inzh.; VRUBLEVSKIY, A.A.,inzh.; GERSHMAN, S.G., inzh.; GOLUBYATNIKOV, G.A.,inzh.; GOHLIN, M.Yu., inzh.; GRAMMATIKOV, A.N., inzh.; DASHEVSKIY, A.P.,inzh.;DIDKOVSKIY, I.L., inzh.; DOBROVOL'SKIY, N.L.,inzh.; DROZDOV, P.F.,kand. tekhn. nauk,; KOZLOVSKIY,A.A.,inzh.; KIRILENKO, V.G.,inzh.; KOPELYANSKIY, G.D.,kand. tekhn. nauk,; KORETSKIY, M.M.,inzh.; KUKHARCHUK, I.N.,inzh.; KUCHER, M.G.,inzh.; MERZLYAK, M.V.,inzh.; MIRONOV, V.V.,inzh.; NOVITSKIY, G.V.,inzh.; PADUN, N.M.,inzh.; PANKRAT'YEV, N.B., inzh.; PARKHOMENKO, V.I.,kand. biol. nauk,; PINSKIY, Ye.A.,inzh.; PODLUBNYY, S.A., inzh.; PORAZHENKO, F.F.,inzh.; PUZANOV, I.G.,inzh.; REDIN, I.P.inzh.; REZNIK, I.S.,kand. tekhn. nauk,; ROGOVSKIY, L.V.,inzh.; RUDERMAN, A.G.,inzh.; RYBAL'SKIY, V.I.,inzh.; SADOVNIKOV, I.S.,inzh.; SEVER'YANOV, N.N.,kand. tekhn. nauk,; SEMESHKO, A.T.,inzh.; SIMKIN, A.Kh., inzh.; SURDUTOVICH, I.N.,inzh.; TROFIMOV, V.I.,inzh.; FEFER, M.M.,inzh.; FIALKOVSKIY, A.M.,inzh.; FRISHMAN, M.S., inzh.; CHERESHNEV, V.A., inzh.; SHESTOV, B.S., inzh.; SHIFMAN, M.I., inzh.; SHUMYATSKIY, A.F.,inzh.; SHCHERBAKOV, V.I.,inzh.; STANCHENKO, I.K., otv. red.; LISHIN, G.L.,inzh.,red.; KRAVTSOV,Ye.P., inzh.,red.; GRIGOR'YEV, G.V.,red.; KAMINSKIY, D.N.,red.; KRASOVSKIY, I.P.,red.; LEYTMAN, L.Z., red.[deceased]; GUREVICH, M.S.,inzh.,red.; DANILEVSKIY, A.S.,inzh.,red.; DEMIN, A.M., inzh.,red.; KAGANOV, S.I.,inzh.,red.; KAUFMAN, B.N., kand. tekhn. nauk, red; LISTOPADOV, N.P.,inzh.,red.; MENDELEVICH, I.R., inzh.,red.[deceased];

(continued on next card)

APPROVED FOR RELEASE: 06/15/2000 CIA-RDP86-00513R001342520004-0"

"APPROVED FOR RELEASE: 06/15/2000 CIA-RDP86-00513R001342520004-0

AGALINA, M.S.... (continued) Card 2.

PENTKOVSKIY, N.I.,inzh.,red.; ROZENBERG, B.M.,inzh.,red.; SLAVIN, D.S., inzh.,red.; FEDOROV, M.P.,inzh.,red.; TSYMBAL, A.V.,inzh.,red.; SMIRNOV, L.V., red. izd-va,; PROZOROVSKAYA, V.L., tekhn. red.

[Mining ; an encyclopedic handbook] Gornoe delo; entsiklopedicheskii spravochnik. Moskva, Gos. nauchno-tekhn. izd-vo lit-ry po ugol'noi' promyshl. Vol. 3.[Organization of planning; Construction of surface buildings and structures] Organizatsiia proektirovaniia; Stroitel'stvo zdanii i sooruzhenii na poverkhnosti shakht. 1958. 497 p. (MIRA 11:12)

(Mining engineering)

(Building)

APPROVED FOR RELEASE: 06/15/2000 CIA-RDP86-00513R001342520004-0"

"APPROVED FOR RELEASE: 06/15/2000 CIA-RDP86-00513R001342520004-0

CZECHOSLOVAKIA

MICHALUS, M; PORAZIK, I.

Kraj Hygienic-Epidemiological Station of the East Slovakian NNV (Krajska hygienicko-epidemiologicka stanica Vychodoslovenskeho NNV), Kosice (for both)

Prague, Ceskoslovenska Hygiena, No 7, 1964, pp 388-394

"Problems of Air Protection in the Construction of Eastern Slovakia Iron and Steel Works."

APPROVED FOR RELEASE: 06/15/2000 CIA-RDP86-00513R001342520004-0"

MICHALUS, M.; PORAZIK, I.

Problems of air protection related to the construction of eastern Slovakia iron and steel works. Cesk. hyg. 9 no.7:388-394 Ag '64.

1. Krajska hygienicko-epidemiologicka stanica Vychodoslovenskeho Krajskeho narodniho vyboru, Kosice.

"APPROVED FOR RELEASE: 06/15/2000 CIA-RDP86-00513R001342520004-0

PORAZIK, Ivan

Neural elements in Auerbach's plexus in the pylorus in cat.
Biologia, Bratisl. 9 no.4:425-436 1954.

1. Histologicko-embryologicky ustav SU v Kosiciach.
(GASTROINTESTINAL SYSTEM, innervation,
Auerbach's plexus in pylorus in cat)

APPROVED FOR RELEASE: 06/15/2000 CIA-RDP86-00513R001342520004-0"

"APPROVED FOR RELEASE: 06/15/2000 CIA-RDP86-00513R001342520004-0

CZECHOSLOVAKIA UDC 616.594-008.9(546.19)-057-074:613.632

PORAZIK, Ivan; LEGATH, Vladimir; PUCHA, Katarina; KRATOCHVIL, Ivan; Krajska Station of Hygiene and Epidemiology, of the Kraj of East Slovakia (Krajska Hygienicko-Epidemiologicka Stanica Vychodoslovenskeho Kraja), Kosice, Director (Riaditel) Dr I. Kratochvil.

"Evaluation of Exposure to Arsenic Trioxide in Working Environment by the Determination of Arsenic Content in Hair."

Prague, Pracovni Lekarstvi, Vol 18, No 8, Oct 66, pp 352-356

Abstract /Authors' English summary modified/: 21 workmen in a copper-producing plant exposed to an atmosphere containing 1.01 to 5.07 mg of As_2O_3 per cubic meter had a mean arsenic content of hair of 178 micrograms per gram. A group of workers in another plant exposed to concentrations of 0.08 to 0.18 mg/ cubic meter of arsenic trioxide had a mean arsenic concentration in hair of 56.6 micrograms per gram. Unexposed workers had a mean hair content of 0.149 micrograms per gram. The exposure time has little influence on the content of arsenic in the hair, but the amount in the air is most important. The workers did not suffer from clinical arsenic poisoning. 3 Tables, 5 Western, 3 Czech, 2 East German references. (Manuscript received 20 Aug 65).

1/1

APPROVED FOR RELEASE: 06/15/2000 CIA-RDP86-00513R001342520004-0"

PORAZIK, P.

Preparing for and ensuring threshing in 1955. p. 214.
ENERGETIKA, Praha, Vol. 5, no. 6, June 1955.

SO: Monthly List of East European Accessions, (EEAL), LC, Vol. 4, no. 10, Oct. 1955, Uncl.

"APPROVED FOR RELEASE: 06/15/2000 CIA-RDP86-00513R001342520004-0

Porazik, P.

Experience with compensation of the power factor in Slovakia (Supplement) p. 15. ENERGETIKA. (Ministerstvo paliv a energetiky. Hlavni sprava elektraren) Praha. Vol. 6, no. 5, May 1956.

Source: EEAL LC Vol. 5, No. 10 Oct. 1956

APPROVED FOR RELEASE: 06/15/2000 CIA-RDP86-00513R001342520004-0"

"APPROVED FOR RELEASE: 06/15/2000 CIA-RDP86-00513R001342520004-0

PORAZIK, P.; BORTLIK, J.

PORAZIK, P.; BORTLIK, J. Threshing in 1956. p. 289.

Vol. 6, no. 7, July, 1956
ENERGETIKA
TECHNOLOGY
Czechoslovakia

So: East European Accession, Vol. 6, No. 5, May 1957

APPROVED FOR RELEASE: 06/15/2000 CIA-RDP86-00513R001342520004-0"

"APPROVED FOR RELEASE: 06/15/2000 CIA-RDP86-00513R001342520004-0

PORAZIK, Pavol, inz.

Economical transmission of small outputs in varying the maximum output during the year. Energetika Cz 13 no.9:488-489 S '63.

1. Zapadoslovenske energeticke zavody, n.p., Bratislava.

APPROVED FOR RELEASE: 06/15/2000 CIA-RDP86-00513R001342520004-0"

"APPROVED FOR RELEASE: 06/15/2000 CIA-RDP86-00513R001342520004-0

PORAZIL, Frantisek; BUZEK, Vaclav; ROTTER, Leo

Experience in production and use of waterless coating Pyrogel. Slevarenstvi 11 no.4:157-160 Ap '63.

1. Vychodoceske chemicke zavody Synthesia, Uhrineves u Prahy; Ceskomoravska-Kolben-Danek Praha, zavod Slevarny; Smeralovy zavody, Brno.

APPROVED FOR RELEASE: 06/15/2000 CIA-RDP86-00513R001342520004-0"

"APPROVED FOR RELEASE: 06/15/2000 CIA-RDP86-00513R001342520004-0

PORAZINSKI, Stefan

Motorcycle problems in Poland. Przegl techn 81 no.8:9-11 '60.

APPROVED FOR RELEASE: 06/15/2000 CIA-RDP86-00513R001342520004-0"

"APPROVED FOR RELEASE: 06/15/2000 CIA-RDP86-00513R001342520004-0

FORAZINSKI, STEFAN

Motocykl SHL 125; katalog czesci zamiennych. (Wyd. 1.) Warszawa, Wydawn. Komunikacyjne, 1953. 60p. (Catalog of spare parts for motorcycle SHL-125. Illus)

SO: Monthly List of East European Accessions, Vol. 3, No. 6, Library of Congress, June. 1954, Uncl.

APPROVED FOR RELEASE: 06/15/2000 CIA-RDP86-00513R001342520004-0"

"APPROVED FOR RELEASE: 06/15/2000 CIA-RDP86-00513R001342520004-0

PORAZINSKI, S., Kamiński, E.

First experiments concerning the application of chromium-plated aluminum cylinders. p. 281.
(TECHNIKA MOTORYZACYJNA. Vol. 7, no. 9, Sept. 1956, Warszawa, Poland)

SO: Monthly List of East European Accessions (EEAL) LC. Vol. 6, no. 12, Dec. 1957. Uncl.

APPROVED FOR RELEASE: 06/15/2000 CIA-RDP86-00513R001342520004-0"

"APPROVED FOR RELEASE: 06/15/2000 CIA-RDP86-00513R001342520004-0

PORBENKOV, G. S.

CA

19

Furnace for annealing plate glass. G. S. Porbenkov. Russ. 57,367, June 30, 1940. Construction details.

ASM-SLA METALLURGICAL LITERATURE CLASSIFICATION

APPROVED FOR RELEASE: 06/15/2000 CIA-RDP86-00513R001342520004-0"

"APPROVED FOR RELEASE: 06/15/2000 CIA-RDP86-00513R001342520004-0

PORCESCU, N.
~~SURNAME (in caps)~~; Given Names

Country: Rumania

Academic Degrees: --

Affiliation: --

Source: Bucharest, Comunicarile Academiei Republicii Populare Romine, No 5, 1961, pp 593-598.

Data: "The Behavior of Some Varieties of Rice With Regard to the Watering System."

Co-author:

MITROIU, Valeria

APPROVED FOR RELEASE: 06/15/2000 CIA-RDP86-00513R001342520004-0"

"APPROVED FOR RELEASE: 06/15/2000 CIA-RDP86-00513R001342520004-0

PORCESCU, N.; MITROIU, Valeria

Behavior of a collection of some rice varieties according to water conditions. Comunicarile AR 11 no.5:593-598 My '61.

1. Comunicare prezentata de Al. Priadcencu, membru corespondent al Academiei R.P.R.

APPROVED FOR RELEASE: 06/15/2000 CIA-RDP86-00513R001342520004-0"

"APPROVED FOR RELEASE: 06/15/2000 CIA-RDP86-00513R001342520004-0

P/0007/64/000/015/0016/0016

ACCESSION NR: AP4033443

AUTHOR: Porcewski, Konstanty

TITLE: Prospects [for the conquest of outer space]

SOURCE: Skrzydlata polska, no. 15, 1964, 16

TOPIC TAGS: space flight, space flight objectives, extraterrestrial chemistry, extraterrestrial physics

ABSTRACT: This article deals with space exploration in the near and distant future. The launching of artificial satellites in the form of flying laboratories, and the investigation of the upper atmosphere, the Earth's magnetic field, cosmic rays, radiation belts, and micrometeorites will continue. Continued efforts will be made to conquer the Moon. First, unmanned rockets and later manned rockets will circle around the Moon, or automatic stations will land softly on the lunar surface. Next, automatic stations will be guided by radio waves from the Earth to the lunar surface where they will move like a kind of caterpillar train. Finally, man will fly to the Moon. But the problem of return takeoff for Earth is as yet unsolved. Large orbital satellites might be used as intermediate

Card 1/2

APPROVED FOR RELEASE: 06/15/2000 CIA-RDP86-00513R001342520004-0"

"APPROVED FOR RELEASE: 06/15/2000 CIA-RDP86-00513R001342520004-0

PORCHER, P.

Whither radiology? Cesk. rentgen. 17 no.6:403-407 N '63.

1. Membre de l'Academie de medecine, membre de l'Academie de chirurgie, radiologiste de l'hopital Saint-Antoine et de l'hopital americain.

(RADIOLOGY)

APPROVED FOR RELEASE: 06/15/2000 CIA-RDP86-00513R001342520004-0"

"APPROVED FOR RELEASE: 06/15/2000 CIA-RDP86-00513R001342520004-0

CENTKIEWICZ, Alina; CENTKIEWICZ, Czeslaw; RADVILLOVICH, K.A. [translator]; VOL'SKIY, Cheslav [translatror]; ZUBOVA, N.N., redaktor; PORCHEVSKIY, O.K., redaktor; SHAPOVALOVA, V.I., tekhnicheskiy redaktor [redacted]

[Conquest of the Arctic. Translated from the Polish] Zavoevanie Arktiki. Perevod s pol'skogo K.A.Radvillovicha i Cheslava Vol'skogo. Pod red. N.N.Zubova. Moskva, Izd-vo inostrannoi lit-ry, 1956. 387 p. (Arctic regions) (MLRA 9:10)

APPROVED FOR RELEASE: 06/15/2000 CIA-RDP86-00513R001342520004-0"

"APPROVED FOR RELEASE: 06/15/2000 CIA-RDP86-00513R001342520004-0

L 17980-63 EWT(1)/BDS AFFTC/ASD/ESD-3 RB

ACCESSION NR: AT3002086 S/2546/62/000/118/0005/0012

AUTHOR: Porchkhidze, S. A. 57

TITLE: Results of an operational field test of the new method for the determination of the tropopause in various geographic regions of the Soviet Union

SOURCE: Moscow. Tsentral'nyy institut prognozov. Trudy, no. 118, 1962. Doklady na soveshchanii po opredeleniyu tropopauzy, 5-12

TOPIC TAGS: tropopause, tropopause classification, World Meteorological Organization, vertical temperature gradient, lapse rate, RAOBS, polar tropopause, low latitude tropopause

ABSTRACT: The paper describes operational tests performed in August 1960 for the determination of the elevation and character of the tropopause from RAOBS performed at Murmansk, Dolgoprudnyy, Mozyr', Kiev, Uzhgorod, Odessa, Kustanay, Alma-Ata, Yakutsk, and Vladivostok (total 1148 RAOBS). The test results appear to substantiate a proposal that the tropopause be determined not from the mean values of the vertical temperature gradient (lapse rate) above and below the tropopause, as recommended by the World Meteorological Organization (WMO), but from the actual lapse rates. The paper summarizes the 9 types of

Card 1/43

APPROVED FOR RELEASE: 06/15/2000 CIA-RDP86-00513R001342520004-0"

"APPROVED FOR RELEASE: 06/15/2000 CIA-RDP86-00513R001342520004-0

L 17980-63

ACCESSION NR: AT3002086

0

tropopause specified by the WMO and explains the variances between the WMO recommendation and the new USSR weather code KN-04 and the Methodological Instruction of the Tsentral'naya Aerologicheskaya Observatoriya (Central Aerological Observatory) which comprise: (1) Low-latitude (S of 45 degrees) polar tropopauses of less than 2-km (but greater than 1-km) thickness; (2) introduction of a "zero-th" type of tropopause, which differs from WMO type 5 only by a greater-than-3-degree/km change in mean lapse rate at the level of the tropopause; (3) slight changes in the boundary values in the mean lapse-rate values in the first km above the level of the tropopause that divide types 1 and 3 from types 2 and 4; (4) the thicknesses of the layer between the level of the tropopause and the level of the greater-than-3-degree/km change in the mean lapse rate have been reduced to no greater than 2 km below and no greater than 3 km above the level of the tropopause. The operational evaluation tests of the new method for the determination of the tropopause yield the following conclusions: (1) As a rule, the location of a single-layer tropopause is sufficiently well determined by the WMO criteria, except when there are no layers 2 km thick or thicker with a lapse rate equal to or less than 2 degrees/km, in which case it is advisable to assume for the tropopause a layer less than 2 km thick with an actual lapse rate equal to or smaller than 0.2 degrees per 100 m, if a tropopause had been identified at elevations close to the bottom of that layer in antecedent soundings. (2) In the case of a multiple

Card 2/4-3

APPROVED FOR RELEASE: 06/15/2000 CIA-RDP86-00513R001342520004-0"

"APPROVED FOR RELEASE: 06/15/2000 CIA-RDP86-00513R001342520004-0

L 17980-63

ACCESSION NR: AT3002086

0

tropopause the WMO criteria do not always permit the determination of the first tropopause (temperate-latitude tropopause); even a 1-km layer with a lapse rate equal to or smaller than 2 degrees/km is too thick for the determination of the lower tropopause; at latitudes below 45 degrees, the lowest level of the first layer of a multiple tropopause should be determined, even though its thickness is less than 1 km above the 400-mb c. p. surface and provided that such a tropopause is substantiated by antecedent soundings. (3) If the temperature curve in the stratosphere is wave-shaped, the WMO criteria permit the determination of several layers 1 km thick in which the mean lapse rate is greater than 3 degrees/km; in such event, more than 3 (4, 5, etc.) tropopauses can be identified. (4) While the new-type classification of tropopauses recommended by the WMO comprises all instances of temperature distributions in a tropopause layer, its effectiveness is impaired by its reliance on the value of the mean vertical lapse rate in 1-km layers, which frequently do not reflect the actual temperature distribution within the layer; the WMO criterion for the type-classification of tropopause should be rendered more precise by using the actual temperature distributions above and below the tropopause layer. Thus, the actual temperature gradient should be used in lieu of the mean temperature gradients in 1-km layers. (5) With reference to the determination of the type of tropopause it is advisable to term actual lapse rates of + or − 0.1 degree/100 m "isothermal." Orig. art.

Card 3/4 3

APPROVED FOR RELEASE: 06/15/2000 CIA-RDP86-00513R001342520004-0"

"APPROVED FOR RELEASE: 06/15/2000 CIA-RDP86-00513R001342520004-0

PORCHKHIDZE, S.A.

Results of testing a new determination of the tropopause in various geographic areas of the Soviet Union. Trudy TSIP no.118:5-12 '62. (MIRA 16:4)

(Atmosphere)

APPROVED FOR RELEASE: 06/15/2000 CIA-RDP86-00513R001342520004-0"

"APPROVED FOR RELEASE: 06/15/2000 CIA-RDP86-00513R001342520004-0

PINEGIN, G.N., mladshiy nauchnyy sotrudnik; LYSIKOVA, V.M., nauchnyy sotrudnik; PORCHKHIDZE, S.A., nauchnyy sotrudnik; SEMINA, N.A., nauchnyy sotrudnik; SOLOPOV, A.V., nauchnyy sotrudnik; RADUS, A.I., nauchnyy sotrudnik; STEL'MAKH, F.N., nauchnyy sotrudnik; YEFIMOV, P.L., otvetstvennyy red.; PROTOPOPOV, V.S., red.; FLAUM, M.Ya., tekhn. red.

[Manual for the preparation of aerological yearbooks] Rukovodstvo po podgotovke aerologicheskikh ezhegodnikov. Leningrad, Gidrometeor. izd-vo. Pt.3. [Temperature sounding of the atmosphere] Temperaturnoe zondirovanie atmosfery. 1958. 126 p. (MIRA 11:9)

1. Russia (1923- U.S.S.R.) Glavnoye upravleniye gidrometeorologicheskoy sluzhby. 2. Glavnaya geofizicheskaya observatoriya (for Pinegin). 3. TSentral'naya aerologicheskaya observatoriya (for Lysikova, Porchkhidze, Semina, Solopov). 4. Nauchno-issledovatel'skiy institut aeroklimatologii (for Radus, Stel'makh).
(Radio meteorology)

APPROVED FOR RELEASE: 06/15/2000 CIA-RDP86-00513R001342520004-0"

"APPROVED FOR RELEASE: 06/15/2000 CIA-RDP86-00513R001342520004-0

SAMGIN, A., professor.

Organization of underground network ("Underground engineering network of a city" by M.M. Porfir'ev, S.P. Zaitsev. Reviewed by A. Samgin). Zhil.-kom.khoz. 6 no.7:30 '56. (MLRA 10:2)

(Civil engineering)
(Porfir'ev, M.M.)
(Zaitsev, S.P.)

APPROVED FOR RELEASE: 06/15/2000 CIA-RDP86-00513R001342520004-0"

"APPROVED FOR RELEASE: 06/15/2000 CIA-RDP86-00513R001342520004-0

PORCSALMI, I.

PORCSALMI, I. Complex analysis, a factory monograph; experiences gained at the Matyas Rakosi Machine-Tool Factory in connection with complex analysis performed in the interest of smooth production. p. 8.

Vol. 10, no. 6, June 1956
TOBBTERMELES
Budapest, Hungary

So: East European Accession, Vol. 6, No. 5, May 1957

APPROVED FOR RELEASE: 06/15/2000 CIA-RDP86-00513R001342520004-0"

"APPROVED FOR RELEASE: 06/15/2000 CIA-RDP86-00513R001342520004-0

C.A. PORCSALMY, I.

The activities of the Tobacco Biochemical Laboratory at Debrecen in 1946–1947. János Bolnár, Ilona Porcsalmy, Lóránd Szabó, and Imre Kiss (Univ., Debrecen, Hung.). *Magyar Kém. Folyóirat* **56**, 137–41(1950).—The sugar detn. method of Pyriki (using Pb acetate) was compared to the biol. method of Andreadis-Toole-Binopoulos (*C.A.* **31**, 8929[9]; **33**, 5080[9]). The former gave higher values caused by presence of non-sugar substances. A micro-titrimetric method was worked out for the detn. of nicotine (I) in tobacco with low or no nornicotine content. This method was more suitable for serial work than that of Pfyl-Schmitt (*C.A.* **22**, 1214). I showed no inhibition on phosphorylation in the carbohydrate metabolism of plants. Expts. with I and other insecticides affirmed that sprays contg. chlorinated hydrocarbons have considerably weaker toxic effects on leaf lice of fruit trees than I. I. F.

APPROVED FOR RELEASE: 06/15/2000 CIA-RDP86-00513R001342520004-0"

"APPROVED FOR RELEASE: 06/15/2000 CIA-RDP86-00513R001342520004-0

NAGY, Zoltan, dr.; PORCSALMY, Ilona, dr.; ANDRASSY, Katalin, dr.; DEZSO, Istvan; KOVACS, Edit; POLYIK, Edit

Chemical analysis of the Hajduszoboszlo hot springs. Hidrologiai kozlony 40 no.4:300-303 Ag '60.

1. Debreceni Orvostudomanyi Egyetem Orvosi Vegytani Intezete.

APPROVED FOR RELEASE: 06/15/2000 CIA-RDP86-00513R001342520004-0"

"APPROVED FOR RELEASE: 06/15/2000 CIA-RDP86-00513R001342520004-0

BOT, G.; ANDRASSY, Katalin; POPCSAIMY, Ilona; VEREB, G.

The effects of feeding, fasting and adrenaline on the glucose-6-phosphatase activitu of the liver. Acta physiol. acad. sci. Hung. 26 no.4:297-304 '65

1. Institute of Medical Chemistry, University Medical School, Debrecen.

APPROVED FOR RELEASE: 06/15/2000 CIA-RDP86-00513R001342520004-0"

"APPROVED FOR RELEASE: 06/15/2000 CIA-RDP86-00513R001342520004-0

PORCSALMY, Ilona

(2)

The specific heat of tobacco. Ilona Porcsalmy (Univ. Debrecen, Hung.). *Rev. intern. tabac* 29, 37(1951).—Completely dry tobacco is reported to have a sp. heat of 0.51 [cal. per g.]. When the tobacco contains moisture, the sp. heat is calcd. from the equation $c = (0.50\,a/100) + (b/100)$, where c is the sp. heat, a the dry wt. in %, and b the moisture content of the tobacco in %. A. M. G.

APPROVED FOR RELEASE: 06/15/2000 CIA-RDP86-00513R001342520004-0"

"APPROVED FOR RELEASE: 06/15/2000 CIA-RDP86-00513R001342520004-0

PORCSALMI, Istvan, szabvanyugyi vezeto

Development in the standardization activity of the Csepel Iron and Metalworks. Szabvany kozl 16 no.10:178-183 O '64.

1. Csepel Iron and Metalworks, Budapest.

APPROVED FOR RELEASE: 06/15/2000 CIA-RDP86-00513R001342520004-0"

"APPROVED FOR RELEASE: 06/15/2000 CIA-RDP86-00513R001342520004-0

PORCSALMY, Janos

National conference and exhibition arranged by educator-innovators in Debrecen. Ujit lap 15 no.13:4 10 Jl '63.

APPROVED FOR RELEASE: 06/15/2000 CIA-RDP86-00513R001342520004-0"

"APPROVED FOR RELEASE: 06/15/2000 CIA-RDP86-00513R001342520004-0

PORCSALMY, Z.

TECHNOLOGY

PERIODICAL: ELELMEZESI IPAR. Vol. 12, no. 10, Oct. 1958

Porcsalmy, Z. Steam injectors and their application. p. 313.

Monthly list of East European Accessions (EEAI) LC, Vol. 8, No. 2, February 1959, Unclass.

APPROVED FOR RELEASE: 06/15/2000 CIA-RDP86-00513R001342520004-0"

"APPROVED FOR RELEASE: 06/15/2000 CIA-RDP86-00513R001342520004-0

PORDES, W.

V 3783. HYDRAULIC MINING OF COAL IN THE POLYSAEVSKAYA-SEVERNAYA MINE.
GP Pardos, H. (Przegl. górn. (Min. Rev., Stalinogród), Oct. 1955, vol. 11, 365-370). A Polish account of operations in a Kuzbass mine. (L).

APPROVED FOR RELEASE: 06/15/2000 CIA-RDP86-00513R001342520004-0"

"APPROVED FOR RELEASE: 06/15/2000 CIA-RDP86-00513R001342520004-0

Pordes, W.

898. FACTORS AFFECTING EFFICIENCY OF DRILLING OF SHOT HOLES. Pordes, W.
(Przegl. górn. (Min. Rev., Stalinogród), Jan. 1956, vol. 12, 5-11).

APPROVED FOR RELEASE: 06/15/2000 CIA-RDP86-00513R001342520004-0"

"APPROVED FOR RELEASE: 06/15/2000 CIA-RDP86-00513R001342520004-0

POREBSKA, Alicja; ZEMBUROWA, Krystyna

Specific gel precipitation. Postepy hig. med. dosw. 17 no.1/2: 1-30 '63.

1. Z Zakladu Mikrobiologii Lekarskiej AM w Krakowie Kierownik: prof. dr Z. Przybylkiewicz.
(ANTIBODIES) (ANTIGENS)

APPROVED FOR RELEASE: 06/15/2000 CIA-RDP86-00513R001342520004-0"

"APPROVED FOR RELEASE: 06/15/2000 CIA-RDP86-00513R001342520004-0

PRZYBYLKIEWICZ, Zdzislaw; ZEMBUROWA, Krystyna; POREBSKA, Alicja; KWIATKOWSKA, Eugenia; GARLICKA, Zdzislawa; PAJOR, Zdzislaw

Investigations on the immunology of diseases of central nervous system in children. Neurol. neurochir. psychiat. Pol. 15 no.4: 625-633 Jl-Ag '65.

1. Z Zakladu Mikrobiologii Lekarskiej AM w Krakowie (Kierownik: prof. dr. Z. Przybylkiewicz) i z Kliniki Psychiatrycznej AM w Krakowie (Kierownik: prof. dr. K. Spett).

APPROVED FOR RELEASE: 06/15/2000 CIA-RDP86-00513R001342520004-0"

"APPROVED FOR RELEASE: 06/15/2000 CIA-RDP86-00513R001342520004-0

POREBSKA, Alicja

Poland/Microbiology. Microbes Pathogenic for Man and Animals F

Abs Jour : Ref Zhur-Biol., No 13, 1958, 57746

Author : Porebska Alicja, Przybylkiewicz Z., Semburowa K
Inst : Not given
Title : Determination of the Tosigenesis of Corynebacterium diphtheriae in vitro

Orig Pub : Postepy hig. i med. doswiadcz., 1956, 10, No 4, 389-400

Abstract : Two layers of the Frobisher medium were poured into a dish. The first layer without serum was used to level the bottom of the dish. After the first layer congealed the second layer with 20% horse serum was poured in. A sterile paper strip (7 1.5cm) saturated with diluted antitoxic serum (500 to 1000 active units in 1 ml) was submerged

Card 1/3

APPROVED FOR RELEASE: 06/15/2000 CIA-RDP86-00513R001342520004-0"

"APPROVED FOR RELEASE: 06/15/2000 CIA-RDP86-00513R001342520004-0

POREBSKA, Alicja

Studies on the soluble antigens of adenoviruses. Acta med. Pol. 6 no.2:199-223 '65.

1. Department of Medical Microbiology, Medical Academy, Cracow (Director: Prof. Dr. Z. Przybylkiewicz).

APPROVED FOR RELEASE: 06/15/2000 CIA-RDP86-00513R001342520004-0"

"APPROVED FOR RELEASE: 06/15/2000 CIA-RDP86-00513R001342520004-0

PRZYBYLKIEWICZ, Zdzislaw; POREBSKA, Alicja; ZEMBUROWA, Krystyna; TUROWSKA, Bozena

Immunoelectrophoretic analysis of rabbit precipitins against human serum proteins. I. Homologous reaction. Acta med. pol. 4 no.1: 105-125 '63.

1. Department of Medical Microbiology, Medical Academy, Cracow Director: Prof. Dr. Z. Przybylkiewicz. Serum and Vaccine Production Laboratories, Cracow Director: Dr. Z. Moszczenski.
(PRECIPITINS) (IMMUNOELECTROPHORESIS)

APPROVED FOR RELEASE: 06/15/2000 CIA-RDP86-00513R001342520004-0"

"APPROVED FOR RELEASE: 06/15/2000 CIA-RDP86-00513R001342520004-0

PRZYBYLKIEWICZ, Zdzislaw; POREBSKA, Alicja; ZEMBUROWA, Krystyna; TUROWSKA, Bozena

Immunoelectrophoretic analysis of rabbit precipitins against human serum proteins. II. Heterologous reaction. Acta med. pol. 4 no.1: 127-142 '63.

1. Department of Medical Microbiology, Medical Academy, Cracow Director: Prof. Dr. Z. Przybylkiewicz Serum and Vaccine Production Laboratories, Cracow Director: Dr. Z. Moszczenski.
(IMMUNOELECTROPHORESIS) (PRECIPITINS)

APPROVED FOR RELEASE: 06/15/2000 CIA-RDP86-00513R001342520004-0"

"APPROVED FOR RELEASE: 06/15/2000 CIA-RDP86-00513R001342520004-0

POLAND

POREBSKA, Alicja and ZEMBUROWA, Krystyna, Department of Medical Microbiology (Zaklad Mikrobiologii Lekarskiej), AM [Akademia Medyczna, Medical Academy] in Krakow (Director: Prof. Dr. Z. PRZYBYLKIEWICZ)

"Specific Precipitation in Gel."

Warsaw, Postepy Higieny i Medycyny Doswiadczalnej, Vol 17, No 1-2, 63, pp 1-30.

Abstract: Referring the reader for the theoretical background to the literature, the authors review the single, as well as double antigen-antibody diffusion tests in agar gel, dwelling in particular on the Ouchterlony method and its modifications, including the Crowle comparator, the identification of the specific precipitation lines, use for purposes of quantitative determination, and application to the study of various antigens. There are 292 references, almost exclusively Western (one Polish and four Czech, with possibly some of the German references being the exception).

1/1

APPROVED FOR RELEASE: 06/15/2000 CIA-RDP86-00513R001342520004-0"

"APPROVED FOR RELEASE: 06/15/2000 CIA-RDP86-00513R001342520004-0

POREBSKA, Alicja; PRZYBYLKIEWICZ, Zdzislaw; ZEMBUROWA, Krystyna

Typing of Corynebacterium diphtheriae isolated in the Krakow region during 1955. Med. dosw. mikrob. 8 no.3:345-350 1956.

1. Z Zakladu Mikrob. Lekarskiej AM w Krakowie.
(CORYNEBACTERIUM DIPHTHERIAE,
typing strains isolated in Poland (Pol))

APPROVED FOR RELEASE: 06/15/2000 CIA-RDP86-00513R001342520004-0"

"APPROVED FOR RELEASE: 06/15/2000 CIA-RDP86-00513R001342520004-0

PORESKA, Alicja; ZEMBUROWA, Krystyna

Sensitivity of Corynebacterium diphtheriae to certain antibiotics in vitro. Med. dosw. mikrob. 8 no.3:351-355 1956.

1. Z Zakladu Midrob. Lekarskiej AM w Krakowie.
(CORYNEBACTERIUM DIPHTHERIAE, effect of drugs on, antibiotics (Pol))
(ANTIBIOTICS, effects, on Corynebacterium diphtheriae (Pol))

APPROVED FOR RELEASE: 06/15/2000 CIA-RDP86-00513R001342520004-0"

"APPROVED FOR RELEASE: 06/15/2000 CIA-RDP86-00513R001342520004-0

POREBSKA, Alicja; PRZYBYLKIEWICZ, Zdzislaw; ZEMBUROWA, Krystyna

Determination of toxicity of Corynebacterium diphtheriae in vitro. Postepy hig. med. dosw. 10 no.4:389-400 1956.

1. Zaklad Mikrobiologii Lekarskiej AM, Krakow, ul. Czysta 18.
(CORYNEBACTERIUM DIPHTHERIAE,
toxin, determ. of prod. in vitro (Pol))

APPROVED FOR RELEASE: 06/15/2000 CIA-RDP86-00513R001342520004-0"

"APPROVED FOR RELEASE: 06/15/2000 CIA-RDP86-00513R001342520004-0

PCREBSKI, J.

"On the tasks of the technical press. Translated from Polish. By, J. Porebski. pp. Z26-Z29. " (Prezglad Techn. 1953, no. 5)

Elektrotechnicky Obzor (Electrical Engineering Review, Czechoslovakia), Vol. 42, No. 12, Dec. 1953, pp. 665-718. (Air, AA, London, IR-594-54, 22 Mar 54, Unclassified)

APPROVED FOR RELEASE: 06/15/2000 CIA-RDP86-00513R001342520004-0"

"APPROVED FOR RELEASE: 06/15/2000 CIA-RDP86-00513R001342520004-0

POREBSKI, J.

"Tasks of technical periodicals." p. 180. (Przegląd Techniczny, Vol. 74, no. 5, May 53, Warszawa)

SO: Monthly List of East European Accessions, Vol 3 No 6 Library of Congress Jun 54 Uncl

APPROVED FOR RELEASE: 06/15/2000 CIA-RDP86-00513R001342520004-0"

"APPROVED FOR RELEASE: 06/15/2000 CIA-RDP86-00513R001342520004-0

POREBSKI, J.

Factory clubs of scientific and technical associations and clubs of technology and innovations. p. 209 PRZEGLAD TECHNICZNY (Naczelna Organizacja Techniczna) Warszawa. Vol. 76, no. 6, June 1955

SOURCE: East European Accessions List, (EEAL), Library of Congress, Vol. 4, no. 12, December 1955

APPROVED FOR RELEASE: 06/15/2000 CIA-RDP86-00513R001342520004-0"

"APPROVED FOR RELEASE: 06/15/2000 CIA-RDP86-00513R001342520004-0

FOREBSKI, J.

FOREBSKI, J. There is something wrong with telecommunication publications; some preliminary conclusions. p. 214.

Vol. 77, no. 5, May 1956
PRZEGLAD TECHNICZNY
PHILOSOPHY & RELIGION
Warszawa, Poland

SO: East European Accession, Vol. 6, March 1957

APPROVED FOR RELEASE: 06/15/2000 CIA-RDP86-00513R001342520004-0"

"APPROVED FOR RELEASE: 06/15/2000 CIA-RDP86-00513R001342520004-0

89408

P/034/60/000/004/003/007
A222/A026

9,7500

AUTHORS: Jakubowski, Ryszard; Porębski, Jan, Masters of Engineering

TITLE: Pulse Integrators for Nuclear Radiation Tests

PERIODICAL: Pomiary-Automatyka-Kontrola, 1960, No. 4, pp. 140 - 142

TEXT: Three types of pulse integrators designed at the Katedra Fizyki II AGH (Department II of Physics, Academy of Mining and Metallurgy) are described; the department employs such integrators in industrial and geological radioisotope research work. All three are of linear type. Figure 2 shows the circuit diagram of a negative feedback integrator which ensures a linear meter scale. The integrator type 1/58, the first of three, was chiefly designed for work in connection with a Geiger counter, though the set may also operate on pulses from a scintillation crystal or from any other source. The integrator is triggered by negative pulses with a minimum amplitude of 0.3, or positive pulses from 5 to 50. A block diagram of the integrator is shown in Figure 3. The probe which holds G-M tube, preamplifier and cathode follower is shown in Figure 4. The discriminator is a simplified Schmitt-circuit [Abstractor's note: the designation "Schmitt-circuit" used in the original is obviously wrong], and is triggered by positive pulses in excess of the discrimination threshold which is variable within 5 - 50. The discriminator has a

Card 1/6

APPROVED FOR RELEASE: 06/15/2000 CIA-RDP86-00513R001342520004-0"

"APPROVED FOR RELEASE: 06/15/2000 CIA-RDP86-00513R001342520004-0

89408

P/034/60/000/004/003/007
A222/A026

Pulse Integrator for Nuclear Radiation Tests

resolving power of 5 μsec, 6 ranges of 0 ÷ 40, 0 ÷ 100, 0 ÷ 400, 0 ÷ 1,000, 0 ÷ ÷ 4,000 and 0 ÷ 10,000 pulses per second respectively, and 5 time constants: 0.3, 1, 3, 10 and 30 sec. The total integration error is less than 2.5%. The electromechanical counter of the integrator records every other pulse; the maximum pulse rate is 14 pulses per sec. The second integrator of the series described, type 2/58, is associated with a scintillation crystal and uses a recording milliammeter (5mA) for a continuous frequency indication. The block diagram of the integrator is shown in Figure 6. The integrating circuit and tube voltmeter are circuited according to Figure 2. The characteristics of the 2/58 integrator are: minimum negative triggering pulses 0.1 v, positive pulses 5 v and up; resolving power of the integrator 5 μsec and discrimination threshold from 5 to 50v; 7 ranges: 0 ÷ 3, 0÷10, 0 ÷ 30, 0 ÷ 100, 0 ÷ 300, 0 ÷ 1,000 and 0 ÷ 3,000 pulses per sec respectively accuracy 1.5%; time constants: 0.2, 1, 5, 20 and 80 sec, respectively. The third and last of the integrator series described, type 3/58, has been designed for work in connection with an electronic converter made by the "Eltra" Plant in Bydgoszcz, and replaces one of the decades of the converter. A block diagram of the integrator is shown in Figure 9. Discriminated pulses, phase-inverted in the first panel of the "Eltra" converter are passed to the developing circuit in the integrator, from there to the separator stage and then to the integration diode circuit. A bridge-circuit tube voltmeter with a 200 μamp magnetoelectric

Card 2/6

APPROVED FOR RELEASE: 06/15/2000 CIA-RDP86-00513R001342520004-0"

"APPROVED FOR RELEASE: 06/15/2000 CIA-RDP86-00513R001342520004-0

89408

P/034/60/000/004/003/007
A222/A026

Pulse Integrators for Nuclear Radiation Tests

transducer is used to measure voltage on the integrator element. The frequency ranges of the 3/58 integrator are a) 0 ÷ 10, 0 ÷ 100 and 0 ÷ 1,000 pulses per second when replacing a rapid-counting decade and b) 0 ÷ 400, 0 ÷ 1,000, 0 ÷ 4,000 and 0 ÷ 10,000 pulses per second when replacing a slow counting decade. Further data: accuracy 3%, time constants 1.5, 3, and 12 seconds, respectively. There are 11 figures and 4 references: 2 English and 2 Polish.

ASSOCIATION: Katedra Fizyki II Akademii Górniczo-Hutniczej (Chair II of Physics, Academy of Mining and Metallurgy) Jakubowski, R.; Instytut Badań Jądrowych - Zakład VI (Institute of Nuclear Research - Department VI) Porębski, J.

Card 3/6

APPROVED FOR RELEASE: 06/15/2000 CIA-RDP86-00513R001342520004-0"

"APPROVED FOR RELEASE: 06/15/2000 CIA-RDP86-00513R001342520004-0

89408

P/034/60/000/004/003/007
A222/A026

Pulse Integrators for Nuclear Radiation Tests

Figure 2: Circuit diagram of negative feedback integrator

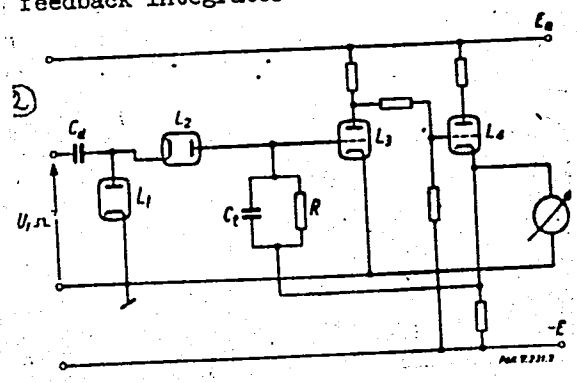

Figure 3: Block diagram of integrator Type 1/58 1 - G-M counter; 2 - pre-amplifier and cathode follower placed in a probe; 3 - discriminator; 4 - separator; 5 - bi-stable multivibrator; 6 - amplitude limiter; 7 - integrating circuit; 8 - time constant expander; 9 - tube voltmeter; 10 - plate voltage supply; 11 - high voltage supply

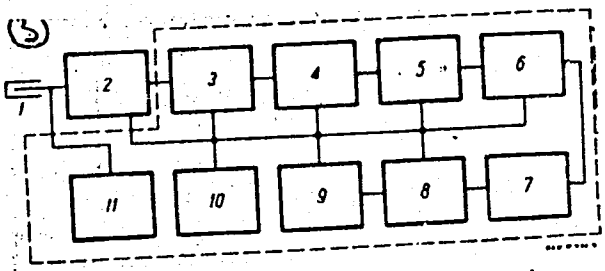

Card 4/6

APPROVED FOR RELEASE: 06/15/2000 CIA-RDP86-00513R001342520004-0"

"APPROVED FOR RELEASE: 06/15/2000 CIA-RDP86-00513R001342520004-0

89408

P/034/60/000/004/C03/007
A222/A026

Pulse Integrator for Nuclear Radiation Tests

Figure 4: Probe of integrator Type 1/58

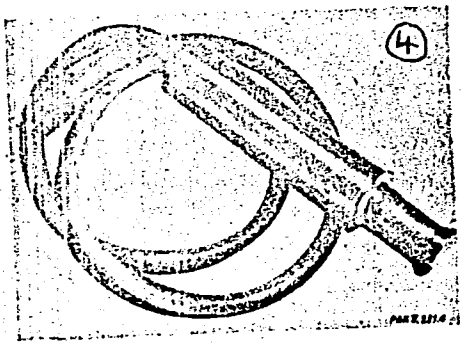

Figure 6: Block diagram of integrator Type 2/58 1 - photomultiplier and pre-amplifier, 2 - discriminator, 3 - pulse-developing circuit, 4 - bi-stable multivibrator, 5 - amplitude limiter, 6 - integration circuit, 7 - tube voltmeter, 8 - plate voltage supply, 9 - high voltage supply

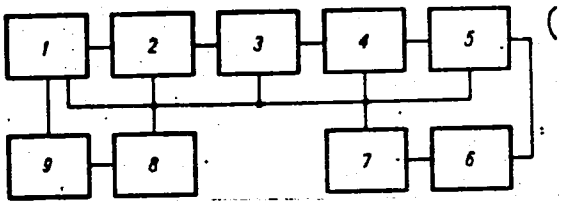

Card 5/6

APPROVED FOR RELEASE: 06/15/2000 CIA-RDP86-00513R001342520004-0"

"APPROVED FOR RELEASE: 06/15/2000 CIA-RDP86-00513R001342520004-0

89408

Pulse Integrator for Nuclear Radiation Tests

P/034/60/000/004/003/007
A222/A026

Figure 9: Block diagram of integrator Type 3/58
1 - pulse developing circuit; 2 - separation stage; 3 - integration circuit;
4 - tube voltmeter; 5 - link to the rapid-counter decade

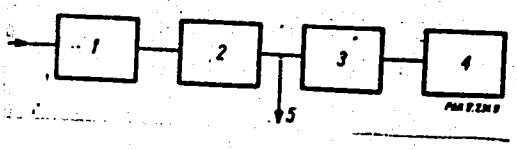

Card 6/6

APPROVED FOR RELEASE: 06/15/2000 CIA-RDP86-00513R001342520004-0"

"APPROVED FOR RELEASE: 06/15/2000 CIA-RDP86-00513R001342520004-0

C-7

CZECHOSLOVAKIA/Nuclear Physics - Cosmic Rays

Abs Jour : Ref Zhur - Fizika, No 9, 1958, No 20027

Author : Dubinsky J., Masaalski J.M., Modry, P., Oles A., Porobski J.
Inst : Not Given
Title : Photon Component of Extensive Atmospheric Showers

Orig Pub : Mat.fyz. casop., 1957, 7, No 4, 235-254

Abstract : Measurement of the transition curve was made with the aid of a setup consisting of the normal shower detector and two telescopes. The shower detector consists of three groups of counters connected in parallel. Each telescope consists also of three groups of counters in aprallel, and in one telescope the counters are made of brass, and in the other they are made of aluminum. The limiting energy of thetelescope with the brass counters is close to 15 Mev, and that for aluminum counters is less than 5 Mev. Each telescope could register eight different types of coincidences. The thickness of the absorber and the aluminum telescope fluctuated from 0 to 50 mm Pb, and in the brass telescope it fluctuated

Card : 1/3

APPROVED FOR RELEASE: 06/15/2000 CIA-RDP86-00513R001342520004-0"

"APPROVED FOR RELEASE: 06/15/2000 CIA-RDP86-00513R001342520004-0

POREBSKI, Stanislaw

Automation of measurements and calculations for statistical studies on the quality of low-power electron tubes. Przegl elektroniki 3 no.7:403-405 Jl '62.

1. Przemyslowy Instytut Elektroniki, Warszawa.

APPROVED FOR RELEASE: 06/15/2000 CIA-RDP86-00513R001342520004-0"

"APPROVED FOR RELEASE: 06/15/2000 CIA-RDP86-00513R001342520004-0

POREBSKI, S.

Measuring valve characteristics by the method of intermittent loading. p.32. (SPRAWOZDANIA Z POSIEDZEN, Warszawa, Vol. 5, No. 12, 1954)

SO: Monthly List of East European Accessions,(EEAL), LC, Vol. 4, No. 6, June 1955, Uncl.

APPROVED FOR RELEASE: 06/15/2000 CIA-RDP86-00513R001342520004-0"

"APPROVED FOR RELEASE: 06/15/2000 CIA-RDP86-00513R001342520004-0

ZAKRZEWSKI, Marek; POREBSKI, Tadeusz

Research on certain nonsinusoidal spectra of fatigue stresses.
Rozpr inz PAN 10 no.3:430-441 '62.

1. Politechnika, Wroclaw.

APPROVED FOR RELEASE: 06/15/2000 CIA-RDP86-00513R001342520004-0"

"APPROVED FOR RELEASE: 06/15/2000 CIA-RDP86-00513R001342520004-0

POREBSKI, T.

Metal-fatigue at a bi-harmonic spectrum of fatigue tension. Acta techn Hung 35/36:147-152 '61

1. Technische Hochschule, Wroclaw.

APPROVED FOR RELEASE: 06/15/2000 CIA-RDP86-00513R001342520004-0"

"APPROVED FOR RELEASE: 06/15/2000 CIA-RDP86-00513R001342520004-0

ZAKRZEWSKI, Marek, prof.dr inz.; POREBSKI, Tadeusz, dr inz.

Contemporary methods of determining the fatigue durability in nonsinusoidal spectra of fatigue stresses. Przegl mech 21 no.17:517-521 10 S '62.

1. Politechnika, Wroclaw.

APPROVED FOR RELEASE: 06/15/2000 CIA-RDP86-00513R001342520004-0"

"APPROVED FOR RELEASE: 06/15/2000 CIA-RDP86-00513R001342520004-0

P/006/62/010/003/001/006
D237/D308

AUTHORS: Zakrzewski, Marek and Porębski, Tadeusz

TITLE: Investigation of certain non-sinusoidal spectra of fatigue loads

PERIODICAL: Rozprawy inżynierskie, v. 10, no. 3, 1962, 431-440

TEXT: The authors investigated the influence of the duration of tensile and compressive stresses in a fatigue load cycle on the fatigue strength. Four different load spectra, two harmonic and two biharmonic differing from each other by the relative duration of the compressive and tensile loads in the load cycle were applied to identical brass test-pieces by means of a fatigue pulsator, developed at the Laboratorium Wytrzymałości Materiałów (Strength of Materials Laboratory) of the Wrocław Polytechnic. The applied stresses were chosen so as to result in a fatigue rupture after 10^5 - 10^6 cycles. It was found that the number of cycles applied to the sample before the rupture occurred was nearly inversely proportional to the relative duration of the tensile load. The authors

Card 1/2

APPROVED FOR RELEASE: 06/15/2000 CIA-RDP86-00513R001342520004-0"

"APPROVED FOR RELEASE: 06/15/2000 CIA-RDP86-00513R001342520004-0

ZAKRZEWSKI, Marek, doc. dr. inz.; POREBSKI, Tadeusz, dr. inz.

The pulsator for fatigue strength testing at biharmonic stress spectra. Pomiary 8 no.7:314-317 Jl '62.

1. Politechnika, Wroclaw.

APPROVED FOR RELEASE: 06/15/2000 CIA-RDP86-00513R001342520004-0"

"APPROVED FOR RELEASE: 06/15/2000 CIA-RDP86-00513R001342520004-0

P/034/62/000/007/002/003
D265/D308

AUTHORS: Zakrzewski, Marek, Docent, Doctor of Engineering and Porębski, Tadeusz, Doctor of Engineering

TITLE: Construction of a pulsator for the investigation of fatigue endurance in bi-harmonic stress spectra

PERIODICAL: Pomiary, automatyka, kontrola no. 7, 1962, 314-317

TEXT: The principle of the pulsator developed at the Laboratorium Wytrzymałości Materiałów Politechniki Wrocławskiej (Strength of Materials Laboratory of the Wrocław Polytechnic Institute) is based on two sets of rotating masses. Two equal masses of each set rotate at constant angular velocities in opposite directions eliminating thus horizontal components of their centrifugal forces. Each set of masses has different constant speed providing thus bi-harmonic stresses in the specimen under test. The construction is shown in Fig. 3, where 1 - gear box, 2 - driving gear box, 3 and 4 - large and small revolving discs carrying point masses of lead, 5 - DC-motor, 6 - DC-generator, 7 - syn-

Card 1/5 2

APPROVED FOR RELEASE: 06/15/2000 CIA-RDP86-00513R001342520004-0"

"APPROVED FOR RELEASE: 06/15/2000 CIA-RDP86-00513R001342520004-0

ISAGULYANTS, V.I.; POREDDA, Z.

Cyanoethylation of nitroparaffins. Zhur.prikl. khim. 37 no.5: 1093-1099 My '64. (MIRA 17:7)

APPROVED FOR RELEASE: 06/15/2000 CIA-RDP86-00513R001342520004-0"

"APPROVED FOR RELEASE: 06/15/2000 CIA-RDP86-00513R001342520004-0

ISAGULYANTS, V.I., akademik; POREDDA, Z.; FEDOROVA, R.I.

Synthesis of γ-nitrocarboxylic acids and their esters using ion exchange resins as catalysts. Dokl. AN Arm. SSR 36 no.1:31-34 '63. (MIRA 17:1)

1. Akademiya nauk Armyanskoy SSR (for Isagulyants).

APPROVED FOR RELEASE: 06/15/2000 CIA-RDP86-00513R001342520004-0"

"APPROVED FOR RELEASE: 06/15/2000 CIA-RDP86-00513R001342520004-0

ISAGULYANTS, V. I.; POREDDA, Z.

Cyanoethylation of nitroparaffins in the presence of the strongly basic anion exchanger AV-17 as a catalyst. Zhur. ob. khim. 33 no.1:318-319 '63. (MIRA 16:1)

(Nitroparaffins) (Cyanoethylation)

APPROVED FOR RELEASE: 06/15/2000 CIA-RDP86-00513R001342520004-0"

"APPROVED FOR RELEASE: 06/15/2000 CIA-RDP86-00513R001342520004-0

ISAGULYANTS, V.I.; POREDDA, Z.

Use of anion exchange resins as catalysts in the cyanoethylation reaction. Zhur.ob.khim. 32 no.7:2382-2383 Jl '62. (MIRA 15:7)

1. Moskovskiy institut neftekhimicheskoy i gazovoy promyshlennosti imeni I.M.Gubkina.
(Anion exchange resins) (Cyanoethylation)

APPROVED FOR RELEASE: 06/15/2000 CIA-RDP86-00513R001342520004-0"

"APPROVED FOR RELEASE: 06/15/2000 CIA-RDP86-00513R001342520004-0

ISAGULYANTS, V.I.; POREDDA, Z.

Cyanoethylation of primary alcohols. Zhur. prikl. khim. 37 no.2:418-422 F '64. (MIRA 17:9)

APPROVED FOR RELEASE: 06/15/2000 CIA-RDP86-00513R001342520004-0"

"APPROVED FOR RELEASE: 06/15/2000 CIA-RDP86-00513R001342520004-0

POREDDA, Z.; ISAGULYANTS, V.I.

Use of anion exchanging resins in catalytic synthesis. Report No.1: Cyanoethylation of primary alcohols. Trudy MINKHIGP no.44:156-160 '63.

Use of anion exchanging resins in catalytic synthesis. Report No.2: Cyanoethylation of nitroparaffins. Ibid.:161-166 (MIRA 18:5)

APPROVED FOR RELEASE: 06/15/2000 CIA-RDP86-00513R001342520004-0"

"APPROVED FOR RELEASE: 06/15/2000 CIA-RDP86-00513R001342520004-0

43763

15 2130

S/081/62/000/023/095/120
B101/B186

AUTHORS: Porejko, Stanisław, Maciejewski, Mieczysław

TITLE: Production of base-proof furane resins

PERIODICAL: Referativnyy zhurnal. Khimiya, no. 23, 1962, 679, abstract 23P104 (Polimery, tworzywa wielkocząsteczkowe, v. 7, no. 1, 1962, 12 - 14 [Pol.; summaries in Eng. and Russ.])

TEXT: The polycondensation resins (catalyst H_3PO_4) from furyl alcohol (I), from I and formaldehyde, and from I and furfural (II) were produced and examined. The resins from I show maximum alkali-resistance and good mechanical strength, the characteristics of resins from I and CH_2O being slightly inferior. Resins from I and II show much lower mechanical strength. The presence of II in the reaction mixture even in small amounts reduces the mechanical strength of the resins considerably. [Abstracter's note: Complete translation.]

Card 1/1

APPROVED FOR RELEASE: 06/15/2000 CIA-RDP86-00513R001342520004-0"

"APPROVED FOR RELEASE: 06/15/2000 CIA-RDP86-00513R001342520004-0

CA

24

The p_H of aqueous solutions of calcium hydroxide and that of solutions of sucrose. Kazimierz Smoleński and Stanisław Porejko. *Roczniki Chem.* 16, 281-7(in French 287)(1936); cf. *C. A.* 29, 7750[8].—The authors report the results of measurements of p_H of aq. solns. of lime and also of solns. of sucrose of different concns. A diagram is given showing the p_H of solns. of $Ca(OH)_2$ in solns. of sucrose, for different concns. of both of the substances. The exptl. results confirm the authors' viewpoint that the sucrose in basic solns. behaves like a weak acid having the dissocn. consts. $K_1 = 3.0 \times 10^{-13}$ and $K_2 = 3.0 \times 10^{-14}$. M. Wojciechowski

ASM-SLA METALLURGICAL LITERATURE CLASSIFICATION

APPROVED FOR RELEASE: 06/15/2000 CIA-RDP86-00513R001342520004-0"

"APPROVED FOR RELEASE: 06/15/2000 CIA-RDP86-00513R001342520004-0

PROCESSES AND PROPERTIES INDEX

The p_H of solutions of calcium hydroxide in water and in sucrose solutions. K. Smolenski and S. Porzko. *Bull. assoc. chim.* 53, 957-65(1936); *Bull. intern. acad. polon. sci., Classe sci. math. nat.* 1936A, 358-66.—See *C. A.* 30, 8075[9].

F. W. Zerban

ASM-SLA METALLURGICAL LITERATURE CLASSIFICATION

APPROVED FOR RELEASE: 06/15/2000 CIA-RDP86-00513R001342520004-0"

"APPROVED FOR RELEASE: 06/15/2000 CIA-RDP86-00513R001342520004-0

31

Production of styrene. Stanisław Porejko. *Przemysł Chem.* 27, 501-5(1948).—The methods of manufg. styrene and styrene resins are reviewed and the possi-

bility of initiating production from domestic raw materials is discussed.

Frank Gomez

METALLURGICAL LITERATURE CLASSIFICATION

APPROVED FOR RELEASE: 06/15/2000 CIA-RDP86-00513R001342520004-0"

"APPROVED FOR RELEASE: 06/15/2000 CIA-RDP86-00513R001342520004-0

31

Polish nomenclature in the field of plastics materials.
Stanisław Porejko. *Przemysł Chem.* 27, 088-95(1948).
A review. Frank Gonet

ASM-SLA METALLURGICAL LITERATURE CLASSIFICATION

APPROVED FOR RELEASE: 06/15/2000 CIA-RDP86-00513R001342520004-0"

"APPROVED FOR RELEASE: 06/15/2000 CIA-RDP86-00513R001342520004-0

POREJKO, S.

"Plastic glass" p. 348 (postepy fizyki, Vol. 4, No. 3, 1953, Warszawa)

SO: Monthly List of East European Accessions, Vol. 3, No. 3 Library of Congress, March 1954, Uncl.

APPROVED FOR RELEASE: 06/15/2000 CIA-RDP86-00513R001342520004-0"

"APPROVED FOR RELEASE: 06/15/2000 CIA-RDP86-00513R001342520004-0

POREJKO, S.

SCIENCE

PERIODCIAL: ROCZNIKI CHEMII VOL. 31, No. 2, 1957

POREJKO, S. L. Zakrzewski and W. Zielinski's Winidur (Vinidue); a book review. p. 744

Monthy List of East European Accession (EEAI) LC Vol. 8, N . 4
April 1959, Unclass

APPROVED FOR RELEASE: 06/15/2000 CIA-RDP86-00513R001342520004-0"