"APPROVED FOR RELEASE: 03/14/2001 CIA-RDP86-00513R001342810020-0

PLATONOV, G., kand.arkhitektury; POZDNYAKOV, P., kand.arkhitektury

Planning apartments on the basis of demographic data. Zhil. stroi. no.1:1 '62. (MIRA 16:1)

(Apartment houses)

APPROVED FOR RELEASE: 03/14/2001 CIA-RDP86-00513R001342810020-0"

"APPROVED FOR RELEASE: 03/14/2001 CIA-RDP86-00513R001342810020-0

PLATONOV, G., kand.arkhitektury; POZDNYAKOV, P., kand.arkhitektury

Types of apartments which allow for the structure of families. Na stroi. Ros. 3 no.1:24-25 Ja '62. (MIRA 16:5)
(Apartment houses)

APPROVED FOR RELEASE: 03/14/2001 CIA-RDP86-00513R001342810020-0"

"APPROVED FOR RELEASE: 03/14/2001 CIA-RDP86-00513R001342810020-0

POZDNYAKOV, P. G.

Oblique cut crystals of Seignette Salt. USSR Patent 78449, Dec 31 1949. The seed crystal is placed at a 45° angle and then is surrounded by the walls of a mold.

APPROVED FOR RELEASE: 03/14/2001 CIA-RDP86-00513R001342810020-0"

"APPROVED FOR RELEASE: 03/14/2001 CIA-RDP86-00513R001342810020-0

POZDNYAKOV, P.G., inzhener; ZHEDULEV, I.S., inzhener.

All-Union scientific-technical conference on piezoelectricity. Elektrichestvo no.6:85-86 Je '53. (MLRA 6:7)

(Piezoelectricity)

APPROVED FOR RELEASE: 03/14/2001 CIA-RDP86-00513R001342810020-0"

"APPROVED FOR RELEASE: 03/14/2001 CIA-RDP86-00513R001342810020-0

POZDNYAKOV, P.G.

Primer for growing crystals. P. G. Pozdnyakov. A. Sitenberg. U S S R 100 988. Sept. 25, 19[illegible]

[illegible] grow crystals having a pronounced unilateral growth, a rod-shaped primer cut from a prepd. crystal is used. To obtain crystals of large cross-section the seed is cut parallel to the edge formed by the intersection of the rapid growing [illegible]. In the case of $(NH_4)_2PO_4$ the cut is made parallel [illegible] of the pyramid. M. Hosac

APPROVED FOR RELEASE: 03/14/2001 CIA-RDP86-00513R001342810020-0"

"APPROVED FOR RELEASE: 03/14/2001 CIA-RDP86-00513R001342810020-0

POZDNYAKOV, P.G.

3

Growing crystals. P. G. Pozdnyakov and A. A. Shternberg. U.S.S.R. 101,179, Oct. 26, 1955. In producing unilaterally growing crystals and particularly crystals of ethylenediamine formate, laminar seeds are placed in the pockets of the crystal carrier in such manner that only the intersections of the rapidly growing facets are protruding from the pocket. Used as seed are laminae cut parallel or almost parallel to the plane bisecting the crystal longitudinally.

M. Hoieh

MT

APPROVED FOR RELEASE: 03/14/2001 CIA-RDP86-00513R001342810020-0"

"APPROVED FOR RELEASE: 03/14/2001 CIA-RDP86-00513R001342810020-0

Pozdnyakov, P. G.

Etching of quartz. P. G. Pozdnyakov and S. P. Pokrovskaya. U.S.S.R. 102,481, Apr. 30, 1956. To decrease the sepn. of undesirable components, quartz is etched with a 30-40% KF.HF soln. at 60-90°. M. Hosch

3
1-4E4a

APPROVED FOR RELEASE: 03/14/2001 CIA-RDP86-00513R001342810020-0"

"APPROVED FOR RELEASE: 03/14/2001 CIA-RDP86-00513R001342810020-0

Pozdnyakov, P. G.

18 18

Depositing silver on quartz sheets. P. G. Pozdnyakov and S. P. Pokrovskaya. U.S.S.R. 102,356, Apr. 30, 1956. Ag is deposited on quartz sheets by means of low-melting glass-like compns. such as B-Pb glass or glass of other compn. to which is added up to 10% of acid or neutral fluorides of K, Na, or other metals. M. Hosch

4
1-4E2c

APPROVED FOR RELEASE: 03/14/2001 CIA-RDP86-00513R001342810020-0"

"APPROVED FOR RELEASE: 03/14/2001 CIA-RDP86-00513R001342810020-0

POZDNYAKOV, P.G.

Growth of ethylenediamine tartrate crystals. Kristallografiia 1 no. 2:228-234 '56. (MLRA 9:11)

1. 10-ye Glavnoye upravleniye Ministerstva radiotekhnicheskoy promyshlennosti.
(Ethylenediamine crystals)

APPROVED FOR RELEASE: 03/14/2001 CIA-RDP86-00513R001342810020-0"

"APPROVED FOR RELEASE: 03/14/2001 CIA-RDP86-00513R001342810020-0

POZDNYAKOV, P.G.

E-7

USSR / Morphology of Crystals. Crystallization.

Abs JOur : Ref Zhur - Fizika, No 4, 1957, No 9383

Author : Pozdnyakov, P.G.
Inst : Tenth Main Administration of the Ministry of Radio Technical Industry.

Title : Growth of Crystals of Lithium Sulfate.

Orig Pub : Kristallografiya, 1956, 1, No 3, 356-359

Abstract : The author gives the fundamental physical and crystallographical data on crystals of lithium sulfate (LS) as piezoelectrics, as well as information on solutions of this substance. The investigation of the growth was first carried out in quiescent pure solutions with supersaturation to 3 -- 4%. Small elongated flat crystals were precipitatex. Addition of LiOH increased the pH from 6 -- 6.5 to 7.5. The shape of the crystals does not change. Upon addition of H_2SO_4, which decreased the pH to 2.5 -- 5, the shape became

Card : 1/2

APPROVED FOR RELEASE: 03/14/2001 CIA-RDP86-00513R001342810020-0"

"APPROVED FOR RELEASE: 03/14/2001 CIA-RDP86-00513R001342810020-0

USSR / Morphology of Crystals. Crystallization.

E-7

Abs Jour : Ref Zhur - Fizika, No 4, 1957, No 9383

Abstract : more isometric, but many parasitic crystals were precipitated and the rate of growth amounted only to 0.4 -- 0.5 mm per day. Neutral and weakly alkaline solutions are more stable and make it possible to employ supersaturations that insure a rate of growth up to 2 mm per day. The crystals of lithium sulfate are very sensitive to impurities and are little sensitive to changes in the growth temperature. The growth took place by increasing the temperature (lithium sulfate has a negative coefficient of solubility) and essentially at a constant temperature either by evaporating the solvent, or else by systematically adding finely crystallized lithium sulfate. The primers used were rod-like, with the length along the axis, cut out from isometric crystals obtained in acid solutions. Apparatus is described for isothermal growth. After 2 weeks, uniform crystals up to 100 grams were grown. The method is recommended for industrial growth of lithium sulfate crystals.

Card : 2/2

APPROVED FOR RELEASE: 03/14/2001 CIA-RDP86-00513R001342810020-0"

"APPROVED FOR RELEASE: 03/14/2001 CIA-RDP86-00513R001342810020-0

POZDNYAKOV, P. G.

"The Growing of Crystals of Potassium Tartrate," by P. G. Pozdnyakov, Tenth Main Administration of the Ministry of Radio Engineering Industry, Kristallografiya, Vol 1, No 5, 1956, pp 589-593

The technique is described of growing crystals of potassium tartrate according to a procedure developed in the period 1947-1950 by A. A. Shternberg and P. G. Pozdnyakov, which now forms the basis for the industrial production of these crystals. The properties of potassium tartrate are compared with those of ethylenediamine tartrate and the conclusion is drawn that potassium tartrate is better suited as a material for piezoelectric oscillators ("resonators"). Production in one crystallizer within 20 days of 9-10 crystals weighing 500 g each is mentioned; the growing of one-kg crystals from an appropriately reduced number of nuclei is considered equally feasible and practical.

Sum 1258

APPROVED FOR RELEASE: 03/14/2001 CIA-RDP86-00513R001342810020-0"

"APPROVED FOR RELEASE: 03/14/2001 CIA-RDP86-00513R001342810020-0

POZDNYAKOV, P. G.

4
4E2c

16 15

Silver-plating quartz lamine. P. G. Pozdnyakov and V. L. Andreeva. U.S.S.R. 106,175, July 25, 1957. The Ag is applied from a low-mol. compn. contg. PbO 84.5, B_2O_3 11.0, and SiO_2 4.5%. M. Hosch

RS RM

amf

APPROVED FOR RELEASE: 03/14/2001 CIA-RDP86-00513R001342810020-0"

"APPROVED FOR RELEASE: 03/14/2001 CIA-RDP86-00513R001342810020-0

SOV/70-3-6-24/25

AUTHORS: Yaroslavskiy, M.I., Pozdnyakov, P.G. and Vasin, I.G.

TITLE: On the Form of the Oscillations of Doubly-convex Quartz Lenses of the AT Cut (O forme kolebaniy dvoyakovypuklykh kvartsevykh linz sreza AT)

PERIODICAL: Kristallografii, 1958, Vol 3, Nr 6, pp 763-4 + 1 plate (USSR)

ABSTRACT: A quartz lens cut from an AT-cut slice of quartz was used as a piezo-electric resonator. The radius of curvature was 250 mm (each face), the axial thickness 8.7 mm and the square of side 82.5 mm was further trimmed by a circle of diameter 89 mm. The fundamental frequency was 212.6 kc/s and excitation was by electrodes applied simply to the curved surfaces. The lens was supported by four wires soldered to the edge at points 45° away from the X and Z' axes. Dust figures (Chladny figures) formed in lycopodium powder were examined. There was always a nodal line perpendicular to the X-axis and as a first approximation oscillations were pure shear waves propagated along the X-axis (electric axis). It is deduced that the supporting wires should be fastened at two points at opposite ends of the nodal line lying along the Z'-axis. "Outline" oscillations at 53.8 kc/s can also

Card1/2

APPROVED FOR RELEASE: 03/14/2001 CIA-RDP86-00513R001342810020-0"

"APPROVED FOR RELEASE: 03/14/2001 CIA-RDP86-00513R001342810020-0

SOV/40-3-6-24/25

On the Form of the Oscillations of Doubly-convex Quartz Lenses of the At Cut

be easily excited. Here the nodal lines form a right-angled cross along the X- and Z'-axes. Oscillators operating in such a mode may have considerable (unstated) advantages. Acknowledgments to Ye.D. Novgorodov, I.S. Zheludev and A.I. Tiranov. There are 4 figures and 1 Soviet references.

SUBMITTED: July 23, 1958

USCOMM-DC-60,609

Card 2/2

APPROVED FOR RELEASE: 03/14/2001 CIA-RDP86-00513R001342810020-0"

"APPROVED FOR RELEASE: 03/14/2001 CIA-RDP86-00513R001342810020-0

20-119-3-22/65

AUTHORS: Vasin, I. G., Pozdnyakov, P. G., Yaroslavskiy, M. I.

TITLE: A Precision Quartz Resonator of High Quality and Small Temperature Dependence of Frequency (Pretsizionnyy kvartsevyy rezonator s vysokoy dobrotnost'yu i maloy temperaturnoy zavisimost'yu chastoty)

PERIODICAL: Doklady Akademii Nauk SSSR, 1958, Vol. 119, Nr 3, pp. 481-483 (USSR)

ABSTRACT: In the USSR in recent years resonators with very high Q (until $17 \cdot 10^6$) were developed, the quartz element of which consisted of a biconvex polished nonmetallized lens in a holder with air interspace (refs. 5-8). These resonators, however, have only a very low mechanical stability. A further particularity of these resonators in the quite high equivalent active resistance R_q (at least 100 ohm). This complicates their application in such generators, which are installed in a circuit with low-frequency bridge. In the precision quartz resonator, which was developed by the authors, a biconvex lens with AT-cut was used. For the increase of the resistance of the resonator against external mechanical

Card 1/3

APPROVED FOR RELEASE: 03/14/2001 CIA-RDP86-00513R001342810020-0"

"APPROVED FOR RELEASE: 03/14/2001 CIA-RDP86-00513R001342810020-0

A Precision Quartz Resonator of High Quality and Small Temperature Dependence of Frequency

20-119 3-22/65

influences the crystal was fixed by wire strings (which in two points were soldered on to the front faces of the lens). The electric voltage was conducted to electrodes, which directly were applied upon the surface of the quartz element. The wire strings simultaneously served as lead-in wires. The gold electrode was applied by sublimation in vacuum upon a chromium base, which was applied in the same way. Such a construction made possible a reduction of the equivalent active resistance of the resonator to from 2 to 6 ohm. By means of several experiments the following was found: Very high electric parameters can be obtained, if lenses with 31.5 mm diameter and with 150 mm radius of curvature are used. In this case no limitation to circular lenses is necessary. By application of square lenses valuable quartz material can be saved and by a correct choice of the parameters a constancy of the parameters of the resonator in a given temperature interval can be obtained. In most resonators of the here described type no polished, but only cut crystals were used. Already with such a treatment resonators with a factor of merit of at least $2 \cdot 10^6$ were obtained and in some cases values of $(5 \text{ to } 6) \cdot 10^6$ were reached. By polishing the

Card 2/3

APPROVED FOR RELEASE: 03/14/2001 CIA-RDP86-00513R001342810020-0"

"APPROVED FOR RELEASE: 03/14/2001 CIA-RDP86-00513R001342810020-0

A Precision Quartz Resonator of High Quality and Small Temperature Dependence of Frequency 20-119-3-22/65

quartz elements values of (7 to 9).10^6 were reached. The lowest temperature coefficients of the frequency were obtained in resonators with quartz elements, which have a certain here given shape and here given dimensions, whereby the cut angles are YX1/35°03' to YX1/35°04'. The typical temperature frequency characteristics of the resonators of the here described type are illustrated by a diagram. The thus constructed resonators were encased in helium filled glass flasks (~5 torr). The concrete values of the parameters of some resonators are composed in a table. A more exact investigation of the aging of the resonators still lies ahead. There are 3 figures, 1 table, and 7 references, 4 of which are Soviet.

PRESENTED: November 15, 1957, by A. V. Shubnikov, Member, Academy of Sciences, USSR

SUBMITTED: November 5,1957

AVAILABLE: Library of Congress

Card 3/3

APPROVED FOR RELEASE: 03/14/2001 CIA-RDP86-00513R001342810020-0"

"APPROVED FOR RELEASE: 03/14/2001 CIA-RDP86-00513R001342810020-0

34734
S/070/62/007/001/020/022
E192/E382

9,2180 (1063,1142,1331)

AUTHORS: Vasin, I.G., Pozdnyakov, P.G., Khramov, L.V. and Yaroslavskiy, M.I.

TITLE: Quartz resonators with slotted piezo-elements

PERIODICAL: Kristallografiya, v.7, no. 1, 1962, 150 - 152

TEXT: At audio and ultrasonic frequencies it is often necessary to employ quartz resonators having a low temperature-frequency coefficient, a high quality factor, a low resonance impedance and, in some cases, a wide resonance range which can be achieved at comparatively small values of the capacitance ratio C_o/C_K. Such resonators are required, in effect, to combine the merits of the resonators with rod-type piezo-elements and the resonators with twin (bimorphous) elements without having their disadvantages. The authors designed (Ref. 3: Author's Certificate no. 123573, July 28, 1959), prepared and investigated a piezo-element of this type satisfying the above requirements. This is achieved by cutting narrow cavities (slots) in resonator plates or rods, the surface of the slots being parallel to the edges of the plates or the

Card 1/3

APPROVED FOR RELEASE: 03/14/2001 CIA-RDP86-00513R001342810020-0"

"APPROVED FOR RELEASE: 03/14/2001 CIA-RDP86-00513R001342810020-0

S/070/62/007/001/020/022
E192/E383

rods. Thin metal coatings, used as electrodes, can be deposited on the surface of the slots. In this way, the problem of producing a crystal piezo-element with one or several internal electrodes is solved. The electric field applied between the internal and external electrodes has opposite directions, so that linear deformations of opposite signs are induced in the element. These result in its bending in the plane parallel to the edges. In this case, the piezo-element with a slot is analogous to a twin element and, consequently, it has a low electrical impedance. On the other hand, by using rods of the XYt/α^{o} cut, whose temperature-frequency characteristics are in the shape of parabolas whose apex can easily be controlled by changing the angle α^{o} of the cut and by suitably arranging the slots (as shown in the figure), the disadvantages of the rod-type resonators can be eliminated (i.e. the inherent high values of R_K and L_K are reduced). Further, due to the large reduction in the equivalent inductance of the resonator, its resonance range is significantly increased. It is also

APPROVED FOR RELEASE: 03/14/2001 CIA-RDP86-00513R001342810020-0"

"APPROVED FOR RELEASE: 03/14/2001 CIA-RDP86-00513R001342810020-0

S/070/62/007/001/020/022
E192/E382

Quartz resonators ....

pointed out that the frequency coefficients of a slotted piezo-element are slightly reduced due to the fact that its bending strength is decreased. Due to the low resonance impedance of slotted resonators their oscillatory tendency is greatly increased in comparison with the solid piezo-elements of the same dimensions.
There are 1 figure, 1 table and 4 references: 2 Soviet-bloc and 2 non-Soviet-bloc.

SUBMITTED: June 8, 1960 (initially)
July 31, 1961 (after revision)

Card 3/4

APPROVED FOR RELEASE: 03/14/2001 CIA-RDP86-00513R001342810020-0"

"APPROVED FOR RELEASE: 03/14/2001 CIA-RDP86-00513R001342810020-0

ACC NR: AP6035850 (A,N) SOURCE CODE: UR/0413/66/000/020/0058/0058

INVENTOR: Pozdnyakov, P. G.; Vasin, I. G.

ORG: none

TITLE: A method of regulating the frequency-temperature characteristics of crystal-controlled resonators. Class 21, No. 187092

SOURCE: Izobreteniya, promyshlennyye obraztsy, tovarnyye znaki, no. 20, 1966, 58

TOPIC TAGS: resonator, piezoelectric crystal, temperature characteristic, frequency characteristic, nonelectric regulator, high temperature coating

ABSTRACT: An Author Certificate has been issued for a method of regulating the frequency-temperature characteristics of crystal-controlled resonators. To adjust the top position of the frequency-temperature curve, a coating is either applied or removed from the surface of the piezoelectric crystal at the region of maximum stress at the fundamental frequency. The coating consists of a material with a high temperature coefficient of the modulus of elasticity.

SUB CODE: 09/ SUBM DATE: 15Mar65/

UDC: 621.372.412

Card 1/1

APPROVED FOR RELEASE: 03/14/2001 CIA-RDP86-00513R001342810020-0"

"APPROVED FOR RELEASE: 03/14/2001 CIA-RDP86-00513R001342810020-0

L 19580-63 EWP(q)/EWT(m)/EWP(B)/BDS AFFTC/ASD/ESD-3 JD/WH/MLK(a)
ACCESSION NR: AP3007622 S/0286/63/000/011/0021/0021

AUTHOR: Pozdnyakov, P. G.; Rakhmaninov, S. V.; Snopov, Yu. S.

TITLE: Quartz oscillator. Class 21, No. 154889

SOURCE: Byul. izobret. i tovarn. znakov, no. 11, 1963, 21

TOPIC TAGS: quartz oscillator, oscillator, piezoelectric crystal, piezoelectric crystal oscillator, crystal oscillator

ABSTRACT: This Author Certificate introduces a quartz oscillator with all of its elements contained inside an evacuated glass envelope (see Fig. 1 of Enclosure). To simplify design and reduce overall dimensions, the printed-circuit portions of the oscillator were deposited directly on the surface of the piezoelectric crystal on sectors of low piezoelectric charge density and low elastic deformation. Orig. art. has: 1 figure.

ASSOCIATION: none

Card 1/3

APPROVED FOR RELEASE: 03/14/2001 CIA-RDP86-00513R001342810020-0"

"APPROVED FOR RELEASE: 03/14/2001 CIA-RDP86-00513R001342810020-0

L 19580-63

ACCESSION NR: AP3007622

SUBMITTED: 12Nov60 DATE ACQ: 16Oct63 ENCL: 01

SUB CODE: GE, SD NO REF SOV: 000 OTHER: 000

Card 2/3

APPROVED FOR RELEASE: 03/14/2001 CIA-RDP86-00513R001342810020-0"

"APPROVED FOR RELEASE: 03/14/2001 CIA-RDP86-00513R001342810020-0

L 19580-63
ACCESSION NR: AP3007622

ENCLOSURE: 01

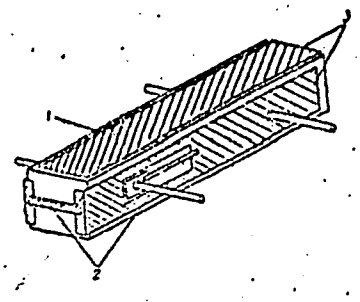

Fig. 1. Quartz oscillator with printed circuitry

1 - Piezoelectric crystal; 2 - resistors; 3 - electrodes.

Card 3/3

APPROVED FOR RELEASE: 03/14/2001 CIA-RDP86-00513R001342810020-0"

"APPROVED FOR RELEASE: 03/14/2001 CIA-RDP86-00513R001342810020-0

VASIN, I.G.; POZDNYAKOV, P.G.; KHRAMOV, L.V.; YAROSLAVSKIY, M.I.

Quartz resonators with slotted piezoelements. Kristallografiia 7 no.1:150-152 Ja-F '62. (MIRA 15:2)
(Oscillators, Crystal)

APPROVED FOR RELEASE: 03/14/2001 CIA-RDP86-00513R001342810020-0"

"APPROVED FOR RELEASE: 03/14/2001 CIA-RDP86-00513R001342810020-0

POZDNYAKOV, P. I.

Seredkin, P. N. jt. au. Leaflet on the harvesting of crops with the assistance of binders. Omsk. 1953. 32 p. (54-47432)

S695.P6

APPROVED FOR RELEASE: 03/14/2001 CIA-RDP86-00513R001342810020-0"

"APPROVED FOR RELEASE: 03/14/2001 CIA-RDP86-00513R001342810020-0

POZDNYAKOV, P. M.

"New organization experiment of artificial insemination in ewes in Kazakhstan."

report presented at the 5th Intl Cong on Animal Reproduction & Artificial Insemination, Trent, Ital., 6-13 Sep 64.

APPROVED FOR RELEASE: 03/14/2001 CIA-RDP86-00513R001342810020-0"

"APPROVED FOR RELEASE: 03/14/2001 CIA-RDP86-00513R001342810020-0

POZDNYAKOV, Petr Mikhaylovich, kand. biol. nauk; SHERMAN, P.N., red.; ZLOBIN, M.V., tekhn. red.

[Sterility in cows and the principal ways of controlling it] IAlovost' korov i osnovnye mery bor'by s nei. Alma-Ata, Kazakhskoe gos. izd-vo, 1956. 17 p. (MIRA 11:7)

(Sterility in animals)

APPROVED FOR RELEASE: 03/14/2001 CIA-RDP86-00513R001342810020-0"

"APPROVED FOR RELEASE: 03/14/2001 CIA-RDP86-00513R001342810020-0

SALYUKOV, P.A., kand. biol. nauk; VERNIGOR, V.A., kand. sel'khoz. nauk; KORMANOVSKAYA, M.A., kand. sel'khoz. nauk; GOLODNOV, A.V.; SKOROBOGATOV, Yu.A., mladshiy nauchnyy sotr.; MALLITSKIY, V.A., kand. sel'khoz. nauk; CHAPCHIN, B.V., kand. sel'khoz. nauk; PONOMAREV, P.P., kand. tekhn. nauk; BARMINTSEV, Yu.N., doktor sel'khoz. nauk; NECHAYEV, I.N., mlad. nauchnyy sotr.; POZDNYAKOV, P.M., kand. biol. nauk; KOVIN'KO, D.A., kand. biol. nauk; BALANINA, O.V., kand. sel'khoz. nauk; MOISEYEV, K.V., kand. sel'khoz. nauk; ROMANOV, P.F., kand. veter. nauk; PAL'GOV, A.A., kand. veter. nauk; ANAN'YEV, P.K., kand. veter. nauk; VASIL'YEV, B.M., kand. sel'khoz. nauk; ABDULLIN, V.A., kand. ekon. nauk; GALIAKBEROV, N., laureat Gos. premii, kand. sel'khoz. nauk, red.; GUSEVA, N., red.; NAGIBIN, P., tekhn. red.

[Reference book for zootechnicians] Spravochnik zootekhnika. Pod red. N. Galiakberova. Alma-Ata, Kazsel'khozgiz, 1963. 492 p. (MIRA 16:5)

(Kazakhstan--Stock and stockbreeding)

APPROVED FOR RELEASE: 03/14/2001 CIA-RDP86-00513R001342810020-0"

"APPROVED FOR RELEASE: 03/14/2001 CIA-RDP86-00513R001342810020-0

POZDNYAKOV, Petr Mikhaylovich; SPIVAK, F.L., red.; GOROKHOV, L., tekhn. red.

[Advanced practices in the artificial insemination of farm animals] Peredovoi opyt iskusstvennogo osemeneniia sel'skokhoziaistvennykh zhivotnykh. Alma-Ata, Kazsel'khozgiz, 1962. 122 p. (MIRA 16:5)
(Kazakhstan--Artificial insemination)

APPROVED FOR RELEASE: 03/14/2001 CIA-RDP86-00513R001342810020-0"

"APPROVED FOR RELEASE: 03/14/2001 CIA-RDP86-00513R001342810020-0

POZDNYAKOV, P.M., kand. biol. nauk

Practical conclusions from the artificial insemination of sheep in Kazakhstan. Zhivotnovodstvo 20 no. 10:75-80 O '58. (MIRA 11:10)
(Kazakhstan--Sheep breeding)
(Artificial insemination)

APPROVED FOR RELEASE: 03/14/2001 CIA-RDP86-00513R001342810020-0"

"APPROVED FOR RELEASE: 03/14/2001 CIA-RDP86-00513R001342810020-0

YELEMANOV, A.Ye., red.; POZDNYAKOV, P.M., red.

[Beef cattle of Kazakhstan] Miasnoe skotovodstvo Kazakhstana. Alma-Ata, Kazakhskoe gos.izd-vo, 1959. 376 p. (MIRA 13:4)
(Kazakhstan--Beef cattle)

APPROVED FOR RELEASE: 03/14/2001 CIA-RDP86-00513R001342810020-0"

"APPROVED FOR RELEASE: 03/14/2001 CIA-RDP86-00513R001342810020-0

BASHKOV, I.M.; POZDNYAKOV, P.M.

[Controlling sterility in cattle] Bor'ba s besplodiem krupnogo rogatogo skota. Alma-Ata, Kazakhskoe gos. izd-vo, 1951. 58 p. (MLRA 10:2)
(Sterility in animals)

APPROVED FOR RELEASE: 03/14/2001 CIA-RDP86-00513R001342810020-0"

"APPROVED FOR RELEASE: 03/14/2001 CIA-RDP86-00513R001342810020-0

POZDNYAKOV, Petr Mikhaylovich, kandidat biologicheskikh nauk; SHERMAN, R.N., redaktor; ZLOBIN, M.V., tekhnicheskiy redaktor

[Artificial insemination of sheep] Iskusstvennoe osemenenie ovets. Alma-Ata, Kazakhskoe gos. izd-vo, 1956. 30 p. (MLRA 9:10)
(Sheep breeding)
(Artificial insemination)

APPROVED FOR RELEASE: 03/14/2001 CIA-RDP86-00513R001342810020-0"

"APPROVED FOR RELEASE: 03/14/2001 CIA-RDP86-00513R001342810020-0

POZDNYAKOV, P. P.

POZDNYAKOV, P. P.- "The Enclosed Stadium." Leningrad Order of Labor Red Banner Engineering-Construction Inst, Leningrad, 1955 (Dissertations for Degree of Candidate of Architectural Sciences)

SO: Knizhnaya Letopis' No. 26, June 1955, Moscow

APPROVED FOR RELEASE: 03/14/2001 CIA-RDP86-00513R001342810020-0"

"APPROVED FOR RELEASE: 03/14/2001 CIA-RDP86-00513R001342810020-0

POZDNYAKOV, S.N.

BABAKIN, S.I., kandidat tekhnicheskikh nauk; [illegible], R.[illegible], professor, doktor tekhnicheskikh nauk; BEYZEL'MAN, [illegible], inzhener; BELYAYEV, V.N., kandidat tekhnicheskikh nauk; BIRGER, I.A., kandidat tekhnicheskikh nauk; BOGUSLAVSKIY, P.Ye., kandidat tekhniceskikh nauk; BOROVICH, L.S., kandidat tekhnicheskikh nauk; VOL'NIR, A.S., professor, doktor tekhnicheskikh nauk; GONIKBERG, Yu.M., inzhener; GORODETSKIY, I.Ye., professor, doktor tekhnicheskikh nauk; GORDON, V.O., professor; DIMENTBERG, F.M., kandidat tekhnicheskikh nauk; DOSCHATOV, V.V., inzhener; IVANOV, A.G., kandidat tekhnicheskikh nauk; KINASOSHVILI, R.S., professor; KODNIR, D.S., kandidat tekhnicheskikh nauk; KOLOMIYTSEV, A.A., kandidat tekhnicheskikh nauk; KUSHUL', M.Ya., kandidat tekhnicheskikh nauk; KRUTIKOV, I.P., kandidat tekhnicheskikh nauk; LEVENSON, Ye.M., inzhener; MAZYRIN, I.V., inzhener; MALININ, N.[illegible], kandidat tekhnicheskikh nauk; MARTYNOV, A.[illegible], kandidat tekhnicheskikh nauk; NIBERG, N.Ya., kandidat tekhnicheskikh nauk; NIKOLAYEV, G.A., professor, doktor tekhnicheskikh nauk; POZDNYAKOV, S.N., PETRUSEVICH, A.I., doktor tekhnicheskikh nauk; PRONIN, dotsent; PONAMOREV, S.D., professor, doktor tekhnicheskikh nauk; PRIGOROVSKIY, N.I., professor, doktor tekhnicheskikh nauk; RESHETOV, D.N., professor, doktor B.A., kandidat tekhnicheskikh nauk; SATEL', E.A., professor, doktor tekhnicheskikh nauk; SERENSEN, S.V.; SLOBODKIN, M.S., inzhener; SPITSYN, N.A., professor, doktor tekhnicheskikh nauk; STOLBIN, G.B., kandidat tekhnicheskikh nauk; TAYTS, B.A., kandiat tekhnicheskikh nauk; UMANSKIY, A.A., TETEL'BAUM, I.M., kandidat tekhnicheskikh nauk; FEODOS'YEV, V.I., professor, professor, doktor tekhnicheskikh nauk;

(Continued on next card)

APPROVED FOR RELEASE: 03/14/2001 CIA-RDP86-00513R001342810020-0"

"APPROVED FOR RELEASE: 03/14/2001 CIA-RDP86-00513R001342810020-0

BABKIN, S.I.--- (continued) Card 2.

KHAYT, D.M., kandidat tekhnicheskikh nauk; SYDINOV, V.Ye., kandidat tekhnicheskikh nauk; SHNAYBER, M.N., inzhener, nauchnyy redaktor; SHEDROV, V.S., kandidat tekhnicheskikh nauk, nauchnyy redaktor; TSVETKOV, A.F., dotsent, nauchnyy redaktor; SLESNIKOV, S.I., inzhener, nauchnyy redaktor; MARKUS, M.Ye., inzhener, nauchnyy redaktor; KARGANOV, V.G., inzhener, nauchnyy redaktor; ACHERKAN, N.S., doktor tekhnicheskikh nauk, professor, redaktor; SOFULOVA, T.F., tekhnicheskiy redaktor

[Manual of machinery manufacture] Spravochnik mashinostroitelia; v trekh tomakh. Moskva, Gos.nauchno-tekhn.izd-vo mashinostroit. lit-ry. Vol.3, 1951 1098 p. (MIRA 10:9)

1. Deystvitel'nyy chlen Akademii nauk USSR (for Serensen)
(Machinery)

APPROVED FOR RELEASE: 03/14/2001 CIA-RDP86-00513R001342810020-0"

"APPROVED FOR RELEASE: 03/14/2001 CIA-RDP86-00513R001342810020-0

ACHERKAN, N.S., doktor tekhnicheskikh nauk, professor, redaktor; BELYAYEV, V.N., kandidat tekhnicheskikh nauk, dotsent; BIDERMAN, V.L., kandidat tekhnicheskikh nauk; BOROVICH, L.S., kandidat tekhnicheskikh nauk; GASHINSKIY, A.G., inzhener; GORODETSKIY, I.Ye., doktor tekhnicheskikh nauk, professor; IVANOV, B.A., doktor tekhnicheskikh nauk, professor; KOLOMIYTSEV, A.A., kandidat tekhnicheskikh nauk, dotsent; KRAGEL'SKIY, I.V., doktor tekhnicheskikh nauk, professor; MAZYRIN, I.V., inzhener; NIKOLAYEV, G.A., doktor tekhnicheskikh nauk, professor; PETRUSEVICH, A.I., doktor tekhnicheskikh nauk; POZDNYAKOV, S.N., dotsent; PONOMAREV, S.D., doktor tekhnicheskikh nauk, professor; PORTUGALOVA, A.A., kandidat tekhnicheskikh nauk; PRONIN, B.A., kandidat tekhnicheskikh nauk; RESHETOV, D.I., doktor tekhnicheskikh nauk, professor; RESHETOV, L.N., doktor tekhnicheskikh nauk, professor; SAVERIN, M.A., doktor tekhnicheskikh nauk, professor; SAVERIN, M.M., kandidat tekhnicheskikh nauk; SLOBODKIN, M.S., inzhener; SPITSYN, N.A., doktor tekhnicheskikh nauk, professor; STOLBIN, G.B., kandidat tekhnicheskikh nauk, dotsent; UMNOV, V.A., inzhener; CHERNYAK, B.Z., kandidat tekhnicheskikh nauk; SHCHEDROV, V.S., kandidat tekhnicheskikh nauk, dotsent.

[Machine parts; collection of materials on calculation and design in two volumes] Detali mashin; sbornik materialov po raschetu i konstruirovaniiu v dvukh knigakh. Izd.2. Moskva, Gos. nauchno-tekhn. izd-vo mashinostroit.i sudostroit.lit-ry. Vol. 2. 1953. 560 p. (MLRA 6:12)

(Machinery--Design)

APPROVED FOR RELEASE: 03/14/2001 CIA-RDP86-00513R001342810020-0"

"APPROVED FOR RELEASE: 03/14/2001 CIA-RDP86-00513R001342810020-0

POZDNYAKOV, S.N.

KOBRIN, M.M., kandidat tekhnicheskikh nauk; POZDNYAKOV, S.N., dotsent, retsenzent; PRONIN, B.A., kandidat tekhnicheskikh nauk, redaktor; MODEL', B.I., tekhnicheskiy redaktor

[Strength of press couplings under repeatedly varying loads] Prochnost' pressovykh soedinenii pri povtorno-peremennoi nagruzke. Moskva, Gos. nauchno-tekhn. izd-vo mashinostroitel'noi lit-ry, 1954. 203 p. (MIRA 8:4)
(Couplings)

APPROVED FOR RELEASE: 03/14/2001 CIA-RDP86-00513R001342810020-0"

"APPROVED FOR RELEASE: 03/14/2001 CIA-RDP86-00513R001342810020-0

AL'SHITS, I.Ya., kandidat tekhnicheskikh nauk; BABKIN, S.I., kandidat tekhnicheskikh nauk; BALAKSHIN, B.S., doktor tekhnicheskikh nauk, professor; BEYSEL'MAN, R.D., inzhener; BELYAYEV, V.H., kandidat tekhnicheskikh nauk; BEREZINA, N.I., inzhener; BIRGER, I.A., doktor tekhnicheskikh nauk; BOGUSLAVSKIY, Yu.M., kandidat tekhnicheskikh nauk; BOROVICH, L.S., kandidat tekhnicheskikh nauk; GONIKBERG, Yu.M., inzhener; GORDON, V.O., professor; GORODETSKIY, I. Ye., doktor tekhnicheskikh nauk, professor; GROMAN, M.B., inzhener; DIKER, Ya.I., kandidat tekhnicheskikh nauk; DOSCHATOV, V.V., inzhener; IVANOV, A.G., kandidat tekhnicheskikh nauk; KINASOSHVILI, R.S., doktor tekhnicheskikh nauk, professor; KRUTIKOV, I.P., kandidat tekhnicheskikh nauk; LEVENSON, Ye.M., inzhzner; MAZYRIN, I.V. inzhener; MARTYNOV, A.D., kandidat tekhnicheskikh nauk; NIBERG, N.Ya., kandidat tekhnicheskikh nauk; NIKOLAYEV, G.A., doktor tekhnicheskikh nauk, professor; PETRUSEVICH, A.I., doktor tekhnicheskikh nauk; POZDNYAKOV, S.N., dotsent; PONOMAREV, S.D., doktor tekhnicheskikh nauk, professor; PRONIN, B.A. kandidat tekhnicheskikh nauk; RESHETOV, D.N., doktor tekhnicheskikh nauk, professor; SATEL', E.A., doktor tekhnicheskikh nauk, professor; SIMAKOV, F.F., kandidat tekhnicheskikh nauk; SLOBODKIN, M.S., inzhener; SPITSYN, N.A., doktor tekhnicheskikh nauk, professor; STOLBIN, G.B., kandidat tekhnicheskikh nauk; TAYTS, B.A., doktor tekhnicheskikh nauk; CHERNYSHEV, H.A., kandidat tekhnicheskikh nauk; SHNEYDEROVICH, R.M., kandidat tekhni-

(Continued on next card)

APPROVED FOR RELEASE: 03/14/2001 CIA-RDP86-00513R001342810020-0"

"APPROVED FOR RELEASE: 03/14/2001 CIA-RDP86-00513R001342810020-0

AL'SHITS, I.Ya., kandidat tekhnicheskikh nauk (and others)..... Card 2.

cheskikh nauk, EYDINOV, V.Ya., kandidat tekhnicheskikh nauk; ERLIKH, L.B., kandidat tekhnicheskikh nauk; ACHERKAN, N.S., doktor tekhnicheskikh nauk, professor, redaktor; MARKUS, M.Ye., inzhener, redaktor; KARGANOV, V.G., inzhener, redaktor; SOKOLOVA, T.F., tekhnicheskiy redaktor.

[Mechanical engineer's manual; in 6 volumes] Spravochnik mashinostroitelia; v shesti tomakh. Izd.2-e, ispr. i dop. Moskva, Gos. nauchno-tekhn.izd-vo mashinostroit. lit-ry, Vol.4, 1955. 851 p. (Mechanical engineering) (MLRA 8:12)

APPROVED FOR RELEASE: 03/14/2001 CIA-RDP86-00513R001342810020-0"

"APPROVED FOR RELEASE: 03/14/2001 CIA-RDP86-00513R001342810020-0

POZDNYAKOV, S.N.

VOLODIN, Ye.I., kandidat tekhnicheskikh nauk; GORODETSKIY, I.Ye., professor, doktor tekhnicheskikh nauk [deceased]; DOSCHATOV, V.V., inzhener; KOROTKOV, V.P., kandidat tekhnicheskikh nauk; MANTSEV, B.M., inzhener; NESTEROVSKIY, M.M., inzhener; PALEY, M.A., inzhener; ROSTOVYKH, A.Ya., kandidat tekhnicheskikh nauk; TAYTS, B.A., professor, doktor tekhnicheskikh nauk; ERVAYS, A.V., inzhener; CHUDOV, V.A., inzhener; ACHERKAN, N.S., doktor tekhnicheskikh nauk, professor, glavnyy redaktor; VLADISLAVLEV, V.S., redaktor; MALOV, A.N., redaktor; POZDNYAKOV, S.N., redaktor; STOLBIN, G.B., redaktor; CHERNAVSKIY, S.A., kandidat tekhnicheskikh nauk, redaktor; MARKUS, M.Ye., inzhener, redaktor [deceased]; KARGANOV, V.G., inzhener, redaktor graficheskikh rabot; SOKOLOVA, T.F., tekhnicheskiy redaktor

[Metal worker's manual; in five volumes] Spravochnik metallista; v piati tomakh. Red. sovet N.S.Acherkan i dr. Moskva, Gos.nauchno-tekhn. izd-vo mashinostroit.lit-ry. Vol.1.(Pod red.S.A.Chernavskogo).1957.603 p. (Mechanical engineering)

APPROVED FOR RELEASE: 03/14/2001 CIA-RDP86-00513R001342810020-0"

"APPROVED FOR RELEASE: 03/14/2001 CIA-RDP86-00513R001342810020-0

AVRUTIN, S.V., inzh.; BAKLUNOV, Ye.D., kand.tekhn.nauk; GLEYZER, L.A., kand.tekhn.nauk; YEFIMOV, V.P., kand.tekhn.nauk; KARTSEV, S.P., inzh.; KEDRINSKIY, V.N., inzh., laureat Leninskoy premii; KORZINKIN, V.I., inzh.; KOSILOVA, A.G., kand.tekhn.nauk; MALOV, A.N., kand.tekhn.nauk; MATYUSHIN, V.M., doktor tekhn.nauk; OSTRETSOV, G.V., kand.tekhn.nauk; PANCHENKO, K.P., kand.tekhn. nauk; PARFENOV, O.D., kand.tekhn.nauk; ROZHDESTVENSKIY, L.A., kand. tekhn.nauk; ROMANOV, V.F., kand.tekhn.nauk; SAVERIN, M.M., doktor tekhn. nauk; SAKHAROV, G.N., kand.tekhn.nauk; SOKOLOVSKIY, I.A., inzh.; FRUMIN, Yu.L., inzh.; SHISHKOV, V.A., doktor tekhn.nauk; ACHERKAN, N.S., prof., doktor tekhn.nauk, glavnyy red.; VLADISLAVLEV, V.S., red. [deceased]; POZDNYAKOV, S.N., red.; ROSTOVYKH, A.Ya., red.; STOLBIN, G.B., red.; CHERNAVSKIY, S.A., red.; KARGANOV, V.G., inzh., red. graficheskikh rabot; GIL'DENBERG, M.I., red.izd-va; SOKOLOVA, T.F., tekhn.red.

[Metalworking handbook; in five volumes] Spravochnik metallista v piati tomakh. Chleny red.soveta: V.S.Vladislavlev i dr. Moskva, Gos.nauchno-tekhn.izd-vo mashinostroit.lit-ry. Vol.5. 1960. 1184 p. (MIRA 13:5)

(Metalwork)

APPROVED FOR RELEASE: 03/14/2001 CIA-RDP86-00513R001342810020-0"

"APPROVED FOR RELEASE: 03/14/2001 CIA-RDP86-00513R001342810020-0

POZDNYAKOV, S.N.

SLEZNIKOV, G.I., inzh.; ANNENKOVA, Ye.G., kand.tekhn.nauk; GRUDOV, P.P., kand.tekhn.nauk [deceased]; DEGTYARENKO, N.S., kand.tekhn.nauk; IMSHENNIK, K.P., kand.tekhn.nauk; KASENKOV, M.A., kand.tekhn. nauk; MEL'NIKOV, N.F., inzh.; MALOV, A.N., kand.tekhn.nauk; POKROVSKIY, B.V., inzh.; POLYAK, S.M., kand.tekhn.nauk; POLYANSKIY, A.N., kand.tekhn.nauk; POPILOV, L.Yu., inzh.; POPOV, V.A., kand. tekhn.nauk; RUBINSHTEYN, S.A., kand.tekhn.nauk; SOKOLOV, N.L., inzh.; SHAMIRGON, S.A., inzh.; SHESTOPAL, V.M., kand.tekhn.nauk; SHUKHOV, Yu.V., kand.tekhn.nauk; ACHERKAN, N.S., prof., doktor tekhn.nauk, glavnyy red.; VLADISLAVLEV, V.S., red. [deceased]; POZDNYAKOV, S.N., red.; ROSTOVYKH, A.Ya., red.; STOLBIN, G.B., red.; CHERNAVSKIY, S.A., red.; KRYLOV, V.I., inzh, red.; KARGANOV, V.G., inzh., red.graficheskikh rabot; SOKOLOVA, T.F., tekhn.red.

[Metalworking handbook in five volumes] Spravochnik metallista v piati tomakh. Chleny red.soveta: V.S.Vladislavlev i dr. Moskva, Gos.nauchno-tekhn.izd-vo mashinostroit. lit-ry. Vol.3. Book 2. [Ferrous and nonferrous metal products] Sortament chernykh i tsvetnykh metallov. 1958. 204 p. Vol.4. 1958. 778 p. (MIRA 12:1)
(Metalwork)

APPROVED FOR RELEASE: 03/14/2001 CIA-RDP86-00513R001342810020-0"

"APPROVED FOR RELEASE: 03/14/2001 CIA-RDP86-00513R001342810020-0

Pozdnyakov, S.N.

ARISTOV, N.P., kand. tekhn. nauk,; BLAGOSKLONSKIY, T.I., kand. khim. nauk,; VESELOVSKIY, V.S., prof., doktor tekhn. nauk,; VLADISLAVLEV, V.S., prof., [deceased]; GOSTENINA, V.M., inzh.; GRINBERG, B.G., kand. tekhn. nauk,; KATTS, N.V., kand. tekhn. nauk,; KESTNER, O.Ye., kand. tekhn. nauk,; KIDIN, I.N., prof., doktor tekhn. nauk,; KIRSHENSHTEYN, Ye.L., inzh.; KITAYGORODSKIY, I.I., prof., doktor tekhn. nauk,; KOLOBNEV, I.F., kand. tekhn. nauk,; KRYLOV, V.V., kand. tekhn. nauk,; LAKHTIN, Yu.M., prof., doktor tekhn. nauk,; LEVI, L.I., kand. tekhn. nauk,; LEPETOV, V.A., kand. tekhn. nauk,; LUNEV, A.A., kand. tekhn. nauk,; LUNEV, F.A., kand. tekhn. nauk, [deceased]; LOTSMANOV, S.N., kand. tekhn. nauk,; MAURAKH, M.A., kand. tekhn. nauk,; MINKEVICH, A.N., kand. tekhn. nauk,; OCHKIN, A.V., inzh.; POPOV, V.A., kand. tekhn. nauk,; RAKOVSKIY, V.S., kand. tekhn. nauk,; SHESTOPAL, V.M., kand. tekhn. nauk,; ACHERKAN, N.S., prof., doktor tekhn. nauk, glavnyy red.; MALOV, A.N., red.; POZDNYAKOV, S.N., red.; ROSTOVYKH, A.Ya., red.; STOLBIN, G.B., red.; CHERNAVSKIY, S.A., red.; KRYLOV, V.I., inzh., red.; KARGANOV, V.G., inzh., red. graficheskikh rabot,; SOKOLOVA, T.F., tekhn. red.

[Metal worker's handbook in five volumes] Spravochnik metallista v piati tomakh. Moskva, Gos. nauchno-tekhn. izd-vo mashinostroit. lit-ry. Vol. 3. Book 1. 1958. 560 p. (MIRA 11:11)
(Metals--Handbooks, manuals, etc.)

APPROVED FOR RELEASE: 03/14/2001 CIA-RDP86-00513R001342810020-0"

"APPROVED FOR RELEASE: 03/14/2001 CIA-RDP86-00513R001342810020-0

POZDNYAKOV, S.N.

BELYAYEV, V.N. kand.tekhn.nauk; BIRGER, I.A., doktor tekhn.nauk; DEMIDOV, S.P., kand.tekhn.nauk; KOROTKOV, V.P., kand.tekhn.nauk; KUDRYAVTSEV, V.N., doktor tekhn.nauk, prof.; MARTYNOV, A.D., kand.tekhn.nauk; NIBERG, N.Ya., kand.tekhn.nauk; PONOMAREV, S.D., doktor tekhn.nauk, prof.; PRONIN, B.A., kand.tekhn.nauk; PUSH, V.E., kand.tekhn.nauk; SLEZNIKOV, G.I., inzh.; STOLBIN, G.B., kand.tekhn.nauk; TAYTS, B.A., doktor tekhn.nauk; ACHERKAN, N.S., doktor tekhn.nauk, prof. glavnyy red.; VLADISLAVLEV, V.S., red [deceased]; MALOV, A.N., red.; POZDNYAKOV, S.N., red.; ROSTOVYKH, A.Ya., red.; CHERNAVSKIY, S.A., kand.tekhn.nauk, red.; MARKUS, M.Ye., inzh., red. [deceased]; KARGANOV, V.G., inzh., red.graficheskikh rabot; SOKOLOVA, T.F., tekhn. red.

[Metalworker's reference book in five volumes] Spravochnik metallista v piati tomakh. Chleny red. soveta V.S.Vladislavlev i dr. Moskva, Gos. nauchno-tekhn.izd-vo mashinostroit. lit-ry. Vol.2. (Pod red. S.A.Chernavskogo). 1958. 974 p.
(Mechanical engineering) (MIRA 11:5)

APPROVED FOR RELEASE: 03/14/2001 CIA-RDP86-00513R001342810020-0"

"APPROVED FOR RELEASE: 03/14/2001 CIA-RDP86-00513R001342810020-0

POZDNYAKOV, Sergey Nikitovich

[Collection of problems on machine parts] Sbornik zadach po detaliam mashin; uchebnoe posobie. Moskva, Mosk. vysshee tekhn. uchilishche, 1961 p. (MIRA 16:10)
(Mechanical engineering--Problems, exercises, etc.)

APPROVED FOR RELEASE: 03/14/2001 CIA-RDP86-00513R001342810020-0"

"APPROVED FOR RELEASE: 03/14/2001 CIA-RDP86-00513R001342810020-0

POZDNYAKOV, V.

Agitators' school. Grazhd. av. 21 no.7:10 Jl '64.

1. Starshina gruppy slushateley shkoly agitatorov, Vil'nyus. (MIRA 18:4)

APPROVED FOR RELEASE: 03/14/2001 CIA-RDP86-00513R001342810020-0"

"APPROVED FOR RELEASE: 03/14/2001 CIA-RDP86-00513R001342810020-0

DOMANOV, V. (Moskva); POKROVSKIY, F. (Moskva); KOZHUKHAREV, I. (Minsk)
KARMAZONOV, A. (Chelyabins); POZDNYAKOV, V. (Leningrad);
YEMEL'YANOV, A. (Krasnodar); PUGOVKIN, Ye. (Astrakhan');
CHUPAKOV, A.

Suggestions of the readers. Radio no.8:55 Ag '60. (MIRA 13:9)
(Radio)

APPROVED FOR RELEASE: 03/14/2001 CIA-RDP86-00513R001342810020-0"

"APPROVED FOR RELEASE: 03/14/2001 CIA-RDP86-00513R001342810020-0

POZDNYAKOV, V.

Agreements on granting exclusive sales rights. Vnesh.torg. 30 no.7:42-46 '60. (MIRA 13:7)
(Russia—Commerce) (Commercial agents)

APPROVED FOR RELEASE: 03/14/2001 CIA-RDP86-00513R001342810020-0"

"APPROVED FOR RELEASE: 03/14/2001 CIA-RDP86-00513R001342810020-0

POZDNYAKOV, V.

Civil law - Czechoslovakia

Civil code of Czechoslovak Republic. Vnesh. torg. No. 1, 1952.

Monthly List of Russian Accessions. Library of Congress March 1952. Unclassified

APPROVED FOR RELEASE: 03/14/2001 CIA-RDP86-00513R001342810020-0"

"APPROVED FOR RELEASE: 03/14/2001 CIA-RDP86-00513R001342810020-0

INOZEMTSEV, N.; POZDNYAKOV, V.

Government Monopolies

"Legal structure of foreign trade monopolies in the U.S.S.R. and their historical development," G. P. Kalyuzhnaya. Reviewed by N. Inozemtsev, V. Pozdnyakov. Vnesh.torg. no. 3, 1952.

Monthly List of Russian Accessions, Library of Congress, June 1952. Unclassified.

APPROVED FOR RELEASE: 03/14/2001 CIA-RDP86-00513R001342810020-0"

"APPROVED FOR RELEASE: 03/14/2001 CIA-RDP86-00513R001342810020-0

POZDNYAKOV, V.F.

Simplifying the structural elements of deep wells in regions of Volgograd Province. Trudy VNIING no.2:3-8 '63.

(MIRA 17:10)

APPROVED FOR RELEASE: 03/14/2001 CIA-RDP86-00513R001342810020-0"

"APPROVED FOR RELEASE: 03/14/2001 CIA-RDP86-00513R001342810020-0

ROZDNYAKOV, V.F.

Simplification of deep-well structures in areas of Volgograd Province. Trudy VNIING no.2:3-8 '63. (MIRA 17:5)

APPROVED FOR RELEASE: 03/14/2001 CIA-RDP86-00513R001342810020-0"

"APPROVED FOR RELEASE: 03/14/2001 CIA-RDP86-00513R001342810020-0

L 01792-66 EWT(1)/EED-2 WR

ACCESSION NR: AP5020764

UR/0108/65/020/008/0072/0077
621.396

55

AUTHOR: Pozdnyakov, V. G. (Active member)

TITLE: Optimum time for analyzing side-lobe radar signals in the presence of phase fluctuations

SOURCE: Radiotekhnika, v. 20, no. 8, 1965, 72-77

TOPIC TAGS: side looking radar, 24,55 radar station, radar signal analysis

ABSTRACT: The effect of uncompensated phase fluctuations on the maximum resolving power of a radar with a synthesized aperture is investigated. It is shown that when phase fluctuations are present, the length of the artificial aperture is optimum in some cases. This optimum length assures a minimum width of the output signal envelope which substantially increases the accuracy of operation. The resolving power is evaluated on the basis of the effective root mean square value of the output signal modulus. In the most important case when signal analysis covers a short interval, the normalized amplitude of the signal received from a point target is considered to be constant. Based on this assumption, the following expression is derived for the effective width of the signal function

Card 1/2

APPROVED FOR RELEASE: 03/14/2001 CIA-RDP86-00513R001342810020-0"

"APPROVED FOR RELEASE: 03/14/2001 CIA-RDP86-00513R001342810020-0

L 01792-66

ACCESSION NR: AP5020764

$$\Delta F_{\text{eff}} = \frac{\sqrt{R\lambda}}{2v}\sqrt{\frac{1}{T_0^2}+\frac{2\sigma_\omega^2}{\pi\alpha}},$$

where $Tv/\sqrt{R\lambda} = T_0$ is the normalized analysis interval. The increase in the width of the signal function in the presence of phase fluctuations as expressed by the above equation is not due entirely to the expansion of the output signal. Any displacement of the signal function without a change in its shape also produces an increase in the root-mean-square deviation. Therefore, in computing the expansion of the signal function, the linear deviation of the phase by an interval equal to the signal processing time plus the width of the signal function should be eliminated. Further analysis shows that there is an optimum analysis time for which the signal function has a minimum effect. Orig. art. has: 32 formulas and 2 figures. [14]

ASSOCIATION: Nauchno-tekhnicheskoye obshchestvo radiotekhniki i elektrosvyazi (Scientific and Technical Society of Radio Technology and Telecommunication)

SUBMITTED: 12Apr65 ENCL: 00 SUB CODE: DC

NO REF SOV: 001 OTHER: 002 ATD PRESS: 4085

Card 2/2

APPROVED FOR RELEASE: 03/14/2001 CIA-RDP86-00513R001342810020-0"

"APPROVED FOR RELEASE: 03/14/2001 CIA-RDP86-00513R001342810020-0

MAMEDOV, R.A.; KRAMER-AGEYEV, Ye.A.; POZDNYAKOV, V.I.

Angular distribution of gamma **bremsstrahlung** from a thick target.
Izv. AN Azerb.SSR.Ser.fiz.-tekh.i mat. nauk no.3:131-134 '64.
(MIRA 17:12)

APPROVED FOR RELEASE: 03/14/2001 CIA-RDP86-00513R001342810020-0"

"APPROVED FOR RELEASE: 03/14/2001 CIA-RDP86-00513R001342810020-0

[illegible], V.M.

Effect of the diffusion of magnesium on the structure of [illegible]
Lit.proizv. no.7:37 Jl '64. [illegible]

APPROVED FOR RELEASE: 03/14/2001 CIA-RDP86-00513R001342810020-0"

"APPROVED FOR RELEASE: 03/14/2001 CIA-RDP86-00513R001342810020-0

POZDNYAKOV, V.M., student

New instrument-flying method for starting a new flight line in aerial photographic serveying. Trudy MIIGATE no.33:79-91 '58. (MIRA 12:8)

1.Aerofotogeodezicheskiy fakul'tet Moskovskogo instituta inzhenerov geodezii, aerofotos"yemki i kartografii.
(Aerial photogrammetry)

APPROVED FOR RELEASE: 03/14/2001 CIA-RDP86-00513R001342810020-0"

"APPROVED FOR RELEASE: 03/14/2001 CIA-RDP86-00513R001342810020-0

3(2) PHASE I BOOK EXPLOITATION SOV/2152

Moscow. Institut inzhenerov geodezii, aerofotos"yemki i kartografii

Trudy, vyp. 33 (Transactions of the Moscow Institute of Engineering Geodesy, Aerial Photography, and Cartography, Nr 33) Moscow, Geodezizdat, 1958. 123 p. 1,000 copies printed.

Editorial Board: A.I. Mazmishvili (Resp. Ed.), V.I. Avgevich (Deputy Resp. Ed.), G.V. Bagratuni, N.Ya. Bobir, N.N. Volkov, A.I. Durnev, S.V. Yeliseyev, P.S. Zakatov, G.P. Levchuk, N.I. Modrinskiy, N.D. Selev'yev, B.V. Fefilov, and P.F. Shokin; Ed. of Publishing House: A.I. Inozemtseva; Tech. Ed.: V.V. Romanova.

PURPOSE: This issue of the Institute's Transactions is intended for geodesists, photogrammetrists, and cartographers.

COVERAGE: This collection of articles covers a variety of problems and questions of interest to personnel in the mapping field. Several instruments employed in cartography are investigated and evaluated. These include a photocartograph, the Photo Reductor MIIGAiK, and

Transactions of the Moscow Institute (Cont.) SOV/2152

marine chronometers. Other subjects treated include Stokes' formula, correction of instrumental errors, Dellen's Method, relief generalization, aerial camera orientation, and others. References accompany individual articles.

Gusnin, S.I. Conversion of Relief (to Graphic) by the Method of Field Projection 41

Bludova, I.M. The Use of a Correlation Ellipse as a Characteristic Curve for a Series of Geodetic Measurements 49

Zakaznov, N.P. Constructing Conical Sections by Means of a Central Projection 55

Ziman, Ya.L. Automation of the Azimuthal Orientation of an Aerial Camera 59

Naumov, A.V. Some Problems in Mapping Economics 63

Gerbatov, V.A., and K.I. Elbakyan. Evaluation of the Photo Reductor MIIGAiK 71

Rozdnyakov, V.N. A New Method of Instrumental Approach to an Aerial Survey Flight Line 79

Gurevich, V.R. Testing and Evaluation of the Marine Chronometers Manufactured by the State Clock Factory im. Kirova 93

Gurshtern, A.A. Some Problems in Evaluating the Accuracy of Series of Measurements of Equal Precision 99

Bronshtern, G.S. A Method of Establishing Micro-triangulation for Detailed Construction (Building) Nets 113

Mastitskiy, Ye.P. Comments to (on) Critical Observations of Dosent N.A. Girshberg 121

Girshberg, N.A. Comments on Ye.P. Mastitskiy's Letter 123

AVAILABLE: Library of Congress

Card 4/4

MM/ad
8-12-59

12

APPROVED FOR RELEASE: 03/14/2001 CIA-RDP86-00513R001342810020-0"

"APPROVED FOR RELEASE: 03/14/2001 CIA-RDP86-00513R001342810020-0

KARNAUKHOVA, Ye.S., doktor ekonom. nauk; BRAGINSKIY, B.I., doktor ekonom. nauk; MASHENKOV, V.F.; POZDNYAKOV, V.N., kand. ekonom. nauk; ALTAYSKIY, I.P., kandidat ekonomicheskikh nauk; MADATYAN, A.I., nauchnyy sotr.; OBOLENSKIY, K.P., red.; PANIN, N.S., red.; DMITRASHKO, E.I., mladshiy red.; PONOMAREVA, A.A., tekhn. red.

[Methods for measuring, analyzing and planning labor productivity on collective and state farms] Metody izmereniia, analiza i planirovaniia proizvoditel'nosti truda v kolkhozakh i sovkhozakh. Moskva, Ekonomizdat, 1963. 211 p. (MIRA 16:7)

1. Institut ekonomiki AN SSSR (for Madatyan).
(Agriculture--Labor productivity)

APPROVED FOR RELEASE: 03/14/2001 CIA-RDP86-00513R001342810020-0"

"APPROVED FOR RELEASE: 03/14/2001 CIA-RDP86-00513R001342810020-0

POZDNYAKOV, V.N., aspirant.

Using machinery in the cultivation of wide-row plantings. Dokl. TSKhA no.27:31-35 '57. (MIRA 11:4)
(Field crops) (Agricultural machinery)

APPROVED FOR RELEASE: 03/14/2001 CIA-RDP86-00513R001342810020-0"

"APPROVED FOR RELEASE: 03/14/2001 CIA-RDP86-00513R001342810020-0

ACCESSION NR: AP4041348 S/0115/64/000/005/0041/0043

AUTHOR: Pozdnyakov, V. P.

TITLE: Adjustable electronic current stabilizer

SOURCE: Izmeritel'naya tekhnika, no. 5, 1964, 41-43

TOPIC TAGS: current stabilizer, voltage stabilizer, potentiometer, potentiometer measurement

ABSTRACT: A new electronic current stabilizer intended for use in potentiometric outfits consists of two parts: (1) a d-c voltage stabilizer with a two-stage amplifier whose anode voltages are stabilized by two gas-discharge tubes (upper part of the circuit diagram in Enclosure 1); (2) a 3-kc oscillator, an adjustable amplifier, a power amplifier with a resonant 3-harmonic filter, an output matched transformer, a rectifier, and a smoothing-out filter (lower part of the diagram). A voltage divider r_6 -r_7 -r_8 provides for rough and fine adjustment of the load

Card 1/3

APPROVED FOR RELEASE: 03/14/2001 CIA-RDP86-00513R001342810020-0"

"APPROVED FOR RELEASE: 03/14/2001 CIA-RDP86-00513R001342810020-0

ACCESSION NR: AP4041348

current in increments within 0.02% of the full scale of the instrument being tested. A numerical example of the circuit is given. It is claimed that ±10% of supply-voltage fluctuations produce a variation in the load current 0.005% or less; that the a-c ripple at the output is under 0.01%; and that a drift of a set value of current begins not earlier than in 2 min. Orig. art. has: 1 figure.

ASSOCIATION: none

SUBMITTED: 00 ENCL: 01

SUB CODE: EE, EC NO REF SOV: 000 OTHER: 000

Card 2/3

APPROVED FOR RELEASE: 03/14/2001 CIA-RDP86-00513R001342810020-0"

"APPROVED FOR RELEASE: 03/14/2001 CIA-RDP86-00513R001342810020-0

ACCESSION NR: AP4041348

ENCLOSURE: 01

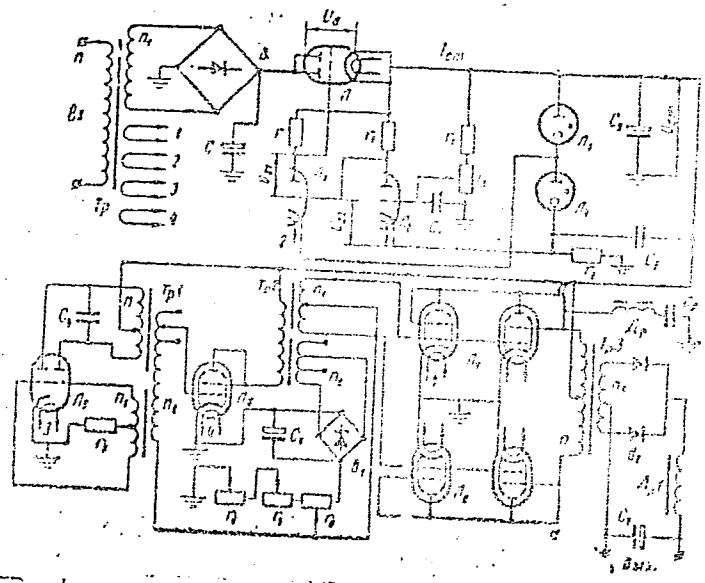

Adjustable electronic current stabilizer

Card 3/3

APPROVED FOR RELEASE: 03/14/2001 CIA-RDP86-00513R001342810020-0"

"APPROVED FOR RELEASE: 03/14/2001 CIA-RDP86-00513R001342810020-0

POZDNYAKOV, V.P.

Simple design of a sinusoidal ferro-resonance stabilizer. Izm. tekh. no. 3:30-32 Mr '61. (MIRA 14:2)
(Voltage regulators)

APPROVED FOR RELEASE: 03/14/2001 CIA-RDP86-00513R001342810020-0"

"APPROVED FOR RELEASE: 03/14/2001 CIA-RDP86-00513R001342810020-0

1. POZDNYAKOV, V. P., Eng.

2. USSR (600)

4. Emel'ianov, Yu. A.

7. Handbook of small vessels. Yu. V. Emel'ianov. N. A. Krysov. Reviewed by Eng. V. P. Pozdnyakov. Rech. transp. 13, No. 2, 1953.

9. Monthly List of Russian Accessions, Library of Congress, April 1953, Uncl.

APPROVED FOR RELEASE: 03/14/2001 CIA-RDP86-00513R001342810020-0"

"APPROVED FOR RELEASE: 03/14/2001 CIA-RDP86-00513R001342810020-0

POZDNYAKOV, V.P., inzh.

Automation of water pumping stations. Mekh.i avtom.proizv. 16 no.8:14-15 Ag '62. (MIRA 15:9)

(Pumping stations)

APPROVED FOR RELEASE: 03/14/2001 CIA-RDP86-00513R001342810020-0"

"APPROVED FOR RELEASE: 03/14/2001 CIA-RDP86-00513R001342810020-0

POZDNYAKOV, V.P., inzhener.

Conversion of mass produced automobile engines for use on vessels. Vest. mash. 33 no.6:26-32 Je '53. (MLRA 6:6)
(Gas and oil engines) (Marine engines)

APPROVED FOR RELEASE: 03/14/2001 CIA-RDP86-00513R001342810020-0"

"APPROVED FOR RELEASE: 03/14/2001 CIA-RDP86-00513R001342810020-0

POZDNYAKOV, V.S.

Role of aminazine in the treatment of epilepsy. Zhur. nevr. i psikh. 63 no.2:276-279 '63 (MIRA 16:11)

1. Moskovskaya gorodskaya psikhonevrologicheskaya bol'nitsa No.5 (ispolnyayushchiy obyazannosti glavnogo vracha V.A. Akinfiyeva).

APPROVED FOR RELEASE: 03/14/2001 CIA-RDP86-00513R001342810020-0"

"APPROVED FOR RELEASE: 03/14/2001 CIA-RDP86-00513R001342810020-0

POZDNYAKOV, V.S.; KHAVIN, B.I.

Epileptic patients under the conditions of a psychiatric hospital; experience from work in wards for epileptic patients. Zhur. nevr. i psikh. 64 no. 12:1830-1832 '64. (MIRA 18:1)

1. Moskovskaya gorodskaya psikhiatricheskaya bol'nitsa No. 5 (glavnyy vrach B.I.Khavin).

APPROVED FOR RELEASE: 03/14/2001 CIA-RDP86-00513R001342810020-0"

"APPROVED FOR RELEASE: 03/14/2001 CIA-RDP86-00513R001342810020-0

POZDNYAKOV, V.S.

Using nitrous oxide in psychiatric practice. Vrach. delo no.3:303 Mr '57 (MLRA 10:5)

1. Igrenskaya psikhiatricheskaya bol'nitsa.
(NITROUS OXIDE) (SCHIZOPHRENIA)

APPROVED FOR RELEASE: 03/14/2001 CIA-RDP86-00513R001342810020-0"

"APPROVED FOR RELEASE: 03/14/2001 CIA-RDP86-00513R001342810020-0

POZDNYAKOV, V.S.

Status epilepticus and its prevention. Zhur. nevr. i psikh. 65 no.9:1377-1382 '65. (MIRA 18:9)

1. Moskovskaya gorodskaya psikhiatricheskaya bol'nitsa No.5 (glavnyy vrach B.I. Khavin).

APPROVED FOR RELEASE: 03/14/2001 CIA-RDP86-00513R001342810020-0"

"APPROVED FOR RELEASE: 03/14/2001 CIA-RDP86-00513R001342810020-0

POZDNYAKOV, V.T.

Functional state of the adrenal glands in acute and chronic pancreatitis. Vest. khir. 94 no.1:36-40 Ja '65. (MIRA 18:7)

1. Iz propedevticheskoy kliniki vnutrennikh bolezney (zav. - prof. A.M.Damir) pediatricheskogo fakul'teta 2-go Moskovskogo meditsinskogo instituta imeni Pirogova.

APPROVED FOR RELEASE: 03/14/2001 CIA-RDP86-00513R001342810020-0"

"APPROVED FOR RELEASE: 03/14/2001 CIA-RDP86-00513R001342810020-0

[illegible]

[illegible]

1. Kafedra [illegible] Damic) [illegible] Instituta [illegible].

APPROVED FOR RELEASE: 03/14/2001 CIA-RDP86-00513R001342810020-0"

"APPROVED FOR RELEASE: 03/14/2001 CIA-RDP86-00513R001342810020-0

POZDNYAKOV, V.T., Cand Med Sci -- (diss) "Functional disorders ~~breakdowns~~ of the pancreas in ~~the case of ulcer~~."

Mos, 1958, 16 pp (Second Mos State Med Inst im N.I. Pirogov) 220 copies (KL, 32-58, 112)

APPROVED FOR RELEASE: 03/14/2001 CIA-RDP86-00513R001342810020-0"

"APPROVED FOR RELEASE: 03/14/2001 CIA-RDP86-00513R001342810020-0

SEMENOV, A.P.; MATVEYEVSKIY, R.M.; POZDNYAKOV, V.V.; KHRUSHCHOV, M.M., prof., doktor tekhn. nauk, otv. red.; LETNEV, B.Ya., red.izd-va; MATYUKHINA, L.I., tekhn. red.

[Production technology and properties of fluoroplast-containing antifriction materials; basic principles of their manufacture] Tekhnologiia izgotovleniia i svoistva soderzhashchikh ftoroplast antifriktsionnykh materialov; osnovnye printsipy proizvodstva. Moskva, Izd-vo AN SSSR, 1963. 62 p. (MIRA 16:10)

(Friction materials) (Plastics)

APPROVED FOR RELEASE: 03/14/2001 CIA-RDP86-00513R001342810020-0"

"APPROVED FOR RELEASE: 03/14/2001 CIA-RDP86-00513R001342810020-0

33012
S/663/61/000/000/006/009
D040/D112

15 8360

AUTHORS: Semenov, A.P.; Pozdnyakov, V.V.

TITLE: An investigation of the antifriction properties of plastics in dry friction and with lubrication

SOURCE: Plastmassy kak antifriktsionnyye materialy. Inst. mashinoved. AN SSSR. Moscow, Izd-vo AN SSSR, 1961, 60-73

TEXT: The primary purpose of the described experiments was to see if a new friction test method devised for metals was also suitable for plastics. The method consisted in moving two short cylindrical specimens along a long cylindrical specimen (Fig. 1) at a constant speed and gradually increasing load at the point of contact (from 0 to 9 kg). The device for this method was designed for the ИМ-12 (IM-12) test machine previously described (Ref. 1: A.P. Semenov. Skhvatyvaniye metallov [The seizure of metals]. Mashgiz, 1958). In the method, the short specimens are either not rotated at all or else slowly rotated in opposite directions, so that fresh portions of all three specimens are continually brought into contact. The first variant was used

Card 1/4

APPROVED FOR RELEASE: 03/14/2001 CIA-RDP86-00513R001342810020-0"

"APPROVED FOR RELEASE: 03/14/2001 CIA-RDP86-00513R001342810020-0

33012
S/663/61/000/000/000/009
D040/D112

An investigation of the ...

in the tests. The long specimen was connected to a ring spring serving as a dynamometer, and the friction force at the point of contact was recorded by a loop oscillograph. Jerky friction, (Fig. 2) if present, was recorded by the movement of the long specimen. The tested materials were: textolite, caprone, teflon, nylon, НД (ND) polyethylene, DU material produced by the British "Glazier Company", and plexiglas. Polymethyl metacrylate was also tested for the sake of comparison. Each plastic was tested for friction with steel and with the same plastic. Distilled water and АУ (AU) spindle oil were used as lubricants. The results, presented in graphs and a table, were as follows: Plexiglas and steel produced jerky friction increasing with load, the friction factor being 0.57-0.42 under a 5 kg load. Textolite and steel produced jerky friction only when oil was used; the friction factor was 0.5 for dry friction and about 0.3 with water lubrication. Caprone tested for friction with steel produced smooth friction without lubrication and with water lubrication, but the friction became jerky at a contact pressure above 4 kg when AU oil was used. Similar results were obtained with nylon, although the friction was slightly less and was not jerky when the oil was used. Friction between ND polyethylene and steel was smooth in all conditions; the

Card 2/4

APPROVED FOR RELEASE: 03/14/2001 CIA-RDP86-00513R001342810020-0"

"APPROVED FOR RELEASE: 03/14/2001 CIA-RDP86-00513R001342810020-0

33012
S/663/61/000/000/006/009
D040/D112

An investigation of the ...

friction factor was 0.14 at a 5 kg load in dry friction or with water, and 0.115 with oil. Teflon and steel produced a friction factor of only 0.049 in dry friction and 0.027 when oil was applied to the steel specimen (teflon is not wettable with oil and water); no jerkiness whatsoever was present. The friction coefficients of the DU material were higher than with teflon as the test loads considerably exceeded the permissible loads for this material, as a result of which the surface film was stripped off, thus exposing the underlying bronze. In the tests between identical plastics, teflon had the lowest friction factor, oil reducing the latter by 30%. It was also found that the spreading of teflon on steel reduced the friction, and it was suggested to coat the steel surface with teflon also. Conclusions: (1) The method used is applicable for testing the antifriction properties of plastics; (2) The method is sensitive and permits easy observation of the effects of various factors on the antifriction properties of plastics; (3) The methods used make possible a sharp division of materials and conditions according to their tendency to produce jerky friction: (4) Teflon, and to a lesser degree, HD polyethylene, are the best materials for service under conditions of dry friction or insufficient lubrication; the high heat re-

Card 3/4

APPROVED FOR RELEASE: 03/14/2001 CIA-RDP86-00513R001342810020-0"

"APPROVED FOR RELEASE: 03/14/2001 CIA-RDP86-00513R001342810020-0

33012
S/663/61/000/000/006/009
D040/D112

An investigation of the ...

sistance of teflon makes it the most promising antifriction material for sleeve bearings in such service conditions; (5) The transfer of teflon to the other part in contact with it, can be a positive factor reducing friction, but the transfer of caprone can increase the friction. There are 17 figures, 1 table and 2 Soviet references.

Card 4/4

APPROVED FOR RELEASE: 03/14/2001 CIA-RDP86-00513R001342810020-0"

"APPROVED FOR RELEASE: 03/14/2001 CIA-RDP86-00513R001342810020-0

L 3299-66 EWP(e)/EWT(m)/EWP(i)/EPF(c)/T/EWP(t)/EWP(b)/EWA(c) IJP(c) JD/WW/DJ/
ACCESSION NR: AP5012074 WH UR/0380/65/000/001/0091/0103
539.62:546.26-162

61
59
B

AUTHOR: Semenov, A. P. (Moscow); Pozdnyakov, V. V. (Moscow)

TITLE: Friction of graphite materials at high temperatures in vacuum and in gases

SOURCE: Mashinovedeniye, no. 1, 1965, 91-103

TOPIC TAGS: graphite, antifriction material, friction, high temperature effect

ABSTRACT: Thick rods of AG-1500 and AG-600 graphite antifriction material and blocks of EEG graphite material were tested for friction at high temperatures in a vacuum and in gaseous media. These materials showed smooth friction at high temperatures, random grabbing being observed only at relatively low temperatures. Specimens of AG-1500 showed uniform friction contact with fine lines in the direction of sliding. About half the surface is covered with smooth slightly polished areas. The friction area has the appearance of black velvet while the remaining surface of the specimen is dark-gray silver. The coefficient of friction for AG-1500 specimens at room temperature is 0.7 in vacuum and 0.08 in air. At 650°, the coefficient of friction drops to 0.25 and natural oscillations cease. Sliding remains smooth with

Card 1/2

APPROVED FOR RELEASE: 03/14/2001 CIA-RDP86-00513R001342810020-0"

"APPROVED FOR RELEASE: 03/14/2001 CIA-RDP86-00513R001342810020-0

L 3299-66

ACCESSION NR: AP5012074

2

a further temperature increase and the coefficient of friction gradually drops, reaching 0.15 at 1960°. During cooling, a sharp increase in the coefficient of friction is observed at 200°. The transition from smooth to grabbing friction during cooling takes place at about 525°, i. e. 100° less than for heating conditions. The other two materials showed similar behavior. The test data indicate that the antifriction properties of graphite materials are not due chiefly to absorbed gases and vapors. A reduction in friction at high temperatures in vacuum and in inert gases (argon, helium and nitrogen) is apparently due to a weakening of the bonds between crystal lattice layers. Tests of AG-600 graphite material in inert gases show that these media have comparatively little effect on friction properties in comparison with tests in vacuum. There is an unexplained minimum during friction in gases at 600-700°, and somewhat of a reduction in friction close to room temperature. Orig. art. has: 9 figures, 3 tables.

ASSOCIATION: none

SUBMITTED: 07Oct64 ENCL: 00 SUB CODE: MT, IE, TD

NO REF SOV: 000 OTHER: 000

Card 2/2 DP

APPROVED FOR RELEASE: 03/14/2001 CIA-RDP86-00513R001342810020-0"

"APPROVED FOR RELEASE: 03/14/2001 CIA-RDP86-00513R001342810020-0

ACC NR: AP7003637 (N) SOURCE CODE: UR/0380/67/000/001/0116/0127

AUTHOR: Semenov, A.P.; Pozdnyakov, V.V. (Moscow)

ORG: none (Moscow)

TITLE: Adhesion interaction in vacuum of refractory metals, sintered metal-like compounds, and sintered hard alloys

SOURCE: Mashinovedeniye, no. 1, 1967, 116-127

TOPIC TAGS: ~~metal~~ adhesion, ~~vacuum metal adhesion~~, refractory metal, ~~adhesion~~, sintered metal ~~adhesion~~, ~~metal adhesion~~ temperature dependence, STRESS LOAD

ABSTRACT: Pairs of similar and dissimilar metals were formed by bringing into contact specimens of Ti, Zr, Nb, Ta, Mo, W and Co under a load of 4—5 kg in a vacuum of 10^{-4}—10^{-5} mm Hg at temperatures up to 0.7 T_{mel} (T_{mel} is the melting temperature of the low-melting component of the pair). The paired specimens contacting each other at their end faces were held under the load for 3 min and then pulled apart to determine the adhesion interaction between them. The ratio of the applied load to the force required to break the joint, tentatively designated the "adhesion coefficient," was used as the criterion of the adhesion capacity of the tested materials. Similar tests were also made on specimens of TiC, VC, Cr_3C_2, NbC, Mo_2C, WC, and CrB sintered carbides and borides and also on specimens of VK-8B,

Card 1/2 UDC: 539.612

APPROVED FOR RELEASE: 03/14/2001 CIA-RDP86-00513R001342810020-0"

"APPROVED FOR RELEASE: 03/14/2001 CIA-RDP86-00513R001342810020-0

ACC NR: AP7003637

VK-11B, VK-15, and VK-15M sintered tungsten carbide-base hard alloys. All tested combinations of similar and dissimilar materials at definite temperatures exhibited adhesion interaction in vacuum, which appeared to be a common phenomenon for all crystalline solid bodies. Adhesion interaction of similar pure metals began in the 0.3—0.4 T_{mel} range; dissimilar pure metals began to interact in the 0.35—0.45 T_{mel} range. The adhesion interaction of similar pure metals was found to depend on their electron structure. Adhesion interaction of pure dissimilar metals is determined by their position relative to one another in the periodic table, by the ratio of their atomic radii, and by the type of their crystal lattices. The beginning of adhesion interaction of tested refractory carbides and borides occurred in the 0.43—0.67 T_{mel} range. The temperature of the beginning of the adhesion interaction of tungsten carbide-base hard alloys depends on the content of the cobalt bond, and lies between the respective values of the temperatures for pure cobalt and tungsten carbide. The described method was successfully used to determine, at various temperatures, the adhesion interaction between the cutting tool and the machined material. The experiments were carried out at the Wear Resistance Laboratory of the Institute of the Science of Machines. Orig. art. has: 8 figures, 2 tables. [MS]

SUB CODE: 13, 11/ SUBM DATE: 27Sep66/ ORIG REF: 006/ OTH REF: 001
ATD PRESS: 5115

Card 2/2

APPROVED FOR RELEASE: 03/14/2001 CIA-RDP86-00513R001342810020-0"

"APPROVED FOR RELEASE: 03/14/2001 CIA-RDP86-00513R001342810020-0

L 24450-66 EWP(e)/EWT(m)/EWP(j)/T/ETC(m)-6 IJP(c) WW/DJ/GS/RM/WH

ACC NR: AT6008946 (A) SOURCE CODE: UR/0000/65/000/000/0065/0074

AUTHORS: Matveyevskiy, R. M.; Pozdnyakov, V. V.; Semenov, A. P.

ORG: none

77

B+1

TITLE: Effects of fillers on the wear resistance of teflon during friction on steel without lubrication

SOURCE: Moscow. Institut mashinovedeniya. Plastmassy v podshipnikakh skol'zheniya; issledovaniya, opyt primeneniya (Plastics in friction bearings; research and experiment in application). Moscow, Izd-vo Nauka, 1965, 65-74

TOPIC TAGS: wear resistance, filler, friction, graphite, borium nitride, teflon, silver, lead, bronze/4D teflon, S-1 graphite, OF 10-1 bronze, SuS 6-12 bronze

ABSTRACT: The friction and wear characteristics of teflon (4D) with various fillers were investigated at the Wear Laboratory of the Machinery Science Institute (Laboratoriya iznosostoykosti Instituta mashinovedeniya) on the apparatus shown in Fig. 1. Graphite (S-1), borium nitride (powder), silver (powder), lead (granules), and bronze (OF 10-1 and SuS 6-12, shavings) were used as fillers (30% by volume). The specimens were pressed at 2000 kg/cm^2 and machined to 20-mm outside diameter, 10-mm inside diameter, and an 8-mm height. Curves of the coefficient of both friction and wear as a function of time were obtained for the different fillers (at 0.21 m/sec, 75 kg/cm^2) and are presented. The results are also summarized in a table and are

Card 1/2

APPROVED FOR RELEASE: 03/14/2001 CIA-RDP86-00513R001342810020-0"

"APPROVED FOR RELEASE: 03/14/2001 CIA-RDP86-00513R001342810020-0

L 24450-66

ACC NR: AT6008946

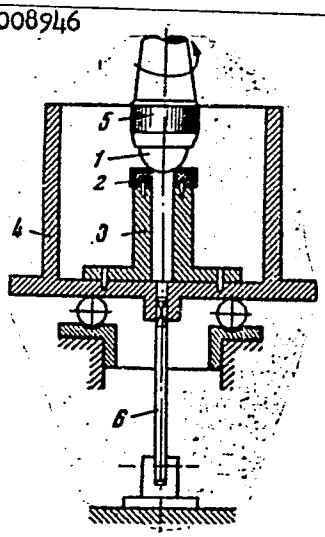

Fig. 1. Friction apparatus: 1 - ball; 2 - test specimen; 3 - support; 4 - cup; 5 - ball holder; 6 - torque transducer.

compared with tables of friction properties obtained by other investigators (F. M. Chapman, Properties and applications of reinforced teflon. Machine Design, 1958, 30, 48). It was found that all additives decrease wear and that bronze is particularly effective. The reasons for the improvements are discussed qualitatively. Orig. art. has: 3 tables and 6 figures.

SUB CODE: 11 / SUBM DATE: 31Jul65/ ORIG REF: 004/ OTH REF: 002

Card 2/2

APPROVED FOR RELEASE: 03/14/2001 CIA-RDP86-00513R001342810020-0"

"APPROVED FOR RELEASE: 03/14/2001 CIA-RDP86-00513R001342810020-0

L 27755-66 EWP(e)/EWT(m)/EWA(d)/EWP(j)/T/ETI/EWP(k)/EWP(t) IJP(c) JD/WB/RM

ACC NR: AP6015661 (A) SOURCE CODE: UR/0413/66/000/009/0073/0074

INVENTOR: Semenov, A. P.; Pozdnyakov, V. V.

ORG: none

39
B

TITLE: Obtaining antifriction material for bearings and other load-bearing surfaces, Class 39, No. 181281

SOURCE: Izobreteniya, promyshlennyye obraztsy, tovarnyye znaki, no. 9, 1966, 73-74

TOPIC TAGS: antifriction material, antifriction bearing, corrosion resistant material

ABSTRACT: This Author Certificate introduces a method for producing antifriction material for various bearings by hot compacting of polytetrafluoethylene with a filler. To obtain corrosion-resistant material, boron nitride and fine silver powder are used as filler. [AZ]

SUB CODE: 13/ SUBM DATE: 02Jul63/ ATD PRESS: 5001

Card 1/1 UDC: 678.743.41.046.3:620.197

APPROVED FOR RELEASE: 03/14/2001 CIA-RDP86-00513R001342810020-0"

"APPROVED FOR RELEASE: 03/14/2001 CIA-RDP86-00513R001342810020-0

L 2568-66 EWT(d)/EWP(e)/EWT(m)/EWP(w)/EPF(c)/EWP(i)/EWA(d)/EWP(v)/T/EWP(t)/EWP(k)/EWP(h)/EWP(z)/EWP(b)/EWP(l) JD/WW/DJ/GS/WH

ACCESSION NR: AT5022687 UR/0000/65/000/000/0332/0336

AUTHORS: Semenov, A. P.; Pozdnyakov, V. V.

TITLE: A method for studying friction and adhesion interactions of high temperature materials at temperatures of up to 2000C

SOURCE: AN SSSR. Nauchnyy sovet po treniyu i smazkam. Teoriya treniya i iznosa (Theory of friction and wear). Moscow, Izd-vo Nauka, 1965, 332-336

TOPIC TAGS: friction, adhesion, high temperature friction, friction apparatus/MVP ZM induction furnace, VN 461 vacuum pump, TsVL 100 diffusion pump

ABSTRACT: An apparatus for studying friction and adhesion of high temperature materials in a vacuum (to 10^{-5} mm Hg) at temperatures of up to 2000C was developed at the Laboratoriya iznosostoykosti, Gosudarstvennogo nauchno-issledovatel'skogo instituta mashinovedeniya (Wear Laboratory of the State Scientific Research Institute of Machinery Operation). The device (see Fig. 1 on the Enclosure) has an MVP-ZM vacuum induction furnace, a VN-461 vacuum pump, and a TsVL-100 diffusion pump as the major components. The friction area has the geometry shown in Fig. 2 on the Enclosure. The lower specimen is attached to a graphite tube 2 (see Fig. 1 on the Enclosure) which is motor-driven through a vacuum seal and bevel gears. The

Card 1/4

APPROVED FOR RELEASE: 03/14/2001 CIA-RDP86-00513R001342810020-0"

"APPROVED FOR RELEASE: 03/14/2001 CIA-RDP86-00513R001342810020-0

L 2568-66

ACCESSION NR: AT5022687

upper specimen is attached to a rod 7 (same material as 2) which is mounted on the loading and measuring assembly 8. The load is applied by cam 10, and the contact force and friction torque are measured by two sets of strain gage instrumented springs 12 and 13. The specimens are heated by cylindrical heater 14 mounted on tube 2 (and rotating with it) and excited by a high frequency inductor 15. Sample curves of the friction coefficient as a function of temperature (20-1750C in a vacuum) are presented for graphite-graphite (AG-600) and magnesium oxide-magnesium oxide couples. Orig. art. has: 5 figures.

ASSOCIATION: Nauchnyy sovet po treniyu i smazkam, AN SSSR (Scientific Committee on Friction and Lubrication, AN SSSR)

SUBMITTED: 18May65

ENCL: 02

SUB CODE: ME

NO REF SOV: 000

OTHER: 000

Card 2/4

APPROVED FOR RELEASE: 03/14/2001 CIA-RDP86-00513R001342810020-0"

"APPROVED FOR RELEASE: 03/14/2001 CIA-RDP86-00513R001342810020-0

L 2568-66

ACCESSION NR: AT5022687

ENCLOSURE: 01

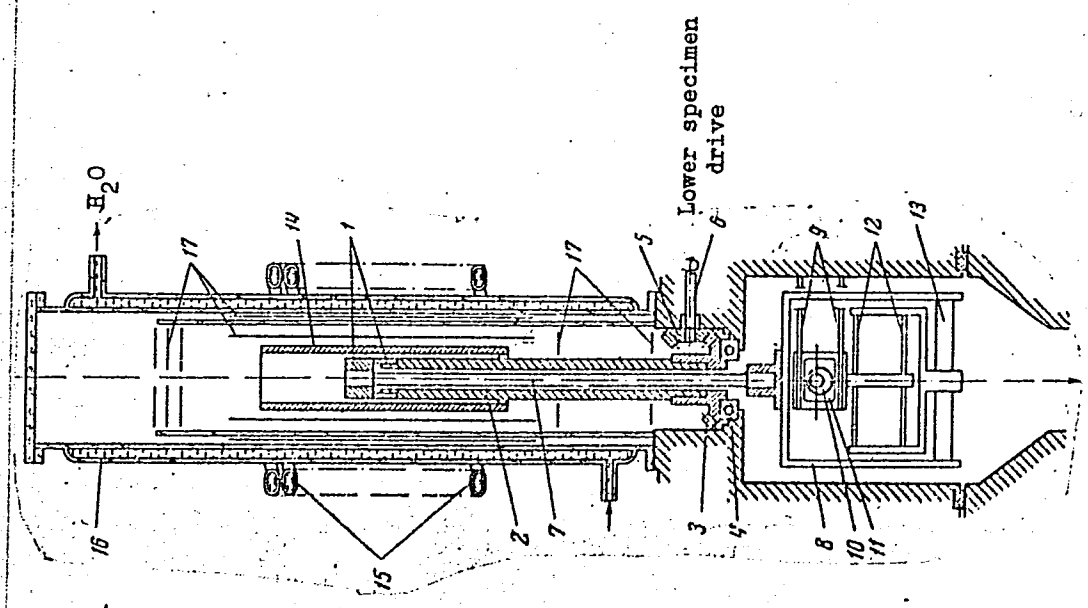

Fig. 1. Schematic of apparatus

Card 3/4

APPROVED FOR RELEASE: 03/14/2001 CIA-RDP86-00513R001342810020-0"

"APPROVED FOR RELEASE: 03/14/2001 CIA-RDP86-00513R001342810020-0

L 2568-66

ACCESSION NR: AT5022687

ENCLOSURE: 02

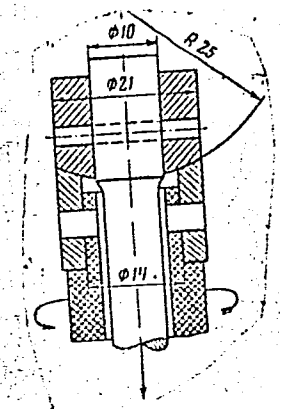

Fig. 2. Geometry of friction area

Card 4/4

APPROVED FOR RELEASE: 03/14/2001 CIA-RDP86-00513R001342810020-0"

"APPROVED FOR RELEASE: 03/14/2001 CIA-RDP86-00513R001342810020-0

L 2531-66 EWP(e)/EPA(s)-2/EWT(m)/EPF(c)/EWP(i)/ETC/EWG(m)/EWP(v)/T/EWP(t)/EWP(k)/EWP(b)/EWA(c) IJP(c) JD/WW/HM/JG/AT/WH

ACCESSION NR: AP5022178 UR/0032/65/031/009/1147/1148
620.179.4-11

76
73
B

AUTHOR: Semenov, A. P.; Pozdnyakov, V. V.

TITLE: Device for the investigation of friction and the adhesive interaction of refractory materials

SOURCE: Zavodskaya laboratoriya, v. 31, no. 9, 1965, 1147-1148

TOPIC TAGS: refractory material, refractory metal, material friction, material adhesion

ABSTRACT: A unit has been built for investigating the friction and adhesion behavior of refractory materials in vacuum (up to about 10^{-5} mm Hg), air, and in various inert and active gaseous media at low and high temperatures. The device can be used for high-temperature mechanical tests of materials in various states of stress, and for the study of chemical reactions between contacting solid substances at high temperatures, such as reactions taking place in diffusion bonding, sintering, and hot compacting. The unit has been used for studying the friction of numerous refractory materials such as graphites, oxides, carbides, and

Card 1/2

APPROVED FOR RELEASE: 03/14/2001 CIA-RDP86-00513R001342810020-0"

"APPROVED FOR RELEASE: 03/14/2001 CIA-RDP86-00513R001342810020-0

L 2531-66

ACCESSION NR: AP5022178

3

borides at high temperatures in vacuum or in various gaseous media. Orig. art. has: 1 figure. [MS]

ASSOCIATION: Gosudarstvennyy nauchno-issledovatel'skiy institut mashinovedeniya (State Scientific Research Institute of Machine Building)

SUBMITTED: 00 ENCL: 00 SUB CODE: MT

NO REF SOV: 000 OTHER: 000 ATD PRESS: 4108

Card 2/2

APPROVED FOR RELEASE: 03/14/2001 CIA-RDP86-00513R001342810020-0"

"APPROVED FOR RELEASE: 03/14/2001 CIA-RDP86-00513R001342810020-0

L 34111-65
EWG(j)/EWP(e)/EWT(m)/EWP(w)/EPF(c)/EPF(n)-2/EWG(m)/EWA(d)/EPR/T/EWP(t)/EWP(b)
Pr-4/Ps-4/Pu-4 IJP(c) JD/WW/JG/DJ/AT/WH

ACCESSION NR: AP5006854 S/0020/65/160/004/0811/0814

AUTHOR: Semenov, A. P.; Pozdnyakov, V. V.

TITLE: Antifriction properties of solids at high temperatures in a vacuum and in some gaseous media

SOURCE: AN SSSR. Doklady, v. 160, no. 4, 1965, 811-814

TOPIC TAGS: friction, graphite material, graphite friction, metal carbide, metal boride, metal oxide, high temperature friction, adhesion, refractory compound friction

ABSTRACT: An investigation has been made of the friction between identical materials in a vacuum of 10^{-4}—10^{-5} mm Hg and in an atmosphere of argon, helium, or nitrogen at temperatures up to 2000C. Graphite-base materials, and TiC, VC, Cr_3C_2, NbC, Mo_2C, WC, CrB, ZrB_2, SiC, and MgO were tested under a load of 5 kg and a sliding speed of 0.8 m/min. In vacuum, the friction coefficient of graphite-base materials decreased from 0.7—0.75 at 20C to 0.1—0.15 at temperatures over 1500C. Admission of air in a vacuum chamber at room temperature sharply decreased the friction coefficient from 0.7 to 0.08. In the helium, argon, and nitrogen atmospheres, the friction coefficient differed only slightly from that in a vacuum. At 1000C, the highest friction was observed in helium and the lowest in nitrogen. The friction behavior of the

Card 1/2

APPROVED FOR RELEASE: 03/14/2001 CIA-RDP86-00513R001342810020-0"

"APPROVED FOR RELEASE: 03/14/2001 CIA-RDP86-00513R001342810020-0

L 34111-65

ACCESSION NR: AP5006854

investigated compounds followed a similar pattern, except for CrB whose friction coefficient increased at temperatures over 1550C. At 1000C, titanium and niobium carbides had the lowest friction coefficients and molybdenum and tungsten carbides, the highest. Admission of air in a vacuum chamber sharply reduced friction in the case of titanium carbide but had no effect on other carbides. In the helium, argon, or nitrogen atmospheres, the average value of the friction coefficient changed only slightly. In the friction between AG-1500 graphite-base material and carbides, the properties of the graphite material play a major role. Adhesion tests in vacuum showed that seizing between like materials is characteristic for all refractory compounds (not for graphite-base materials). However, seizing occurred at higher homolgous temperatures than for corresponding pure metals. The temperature of the beginning of adhesion varied from 1000 and 1955C for Mo_2C and NbC, respectively. Orig. art. has: 3 figures and 1 table. [MS]

ASSOCIATION: Gosudarstvenny nauchno-issledovatel'skiy institut mashinovedeniya (State Scientific Research Institute of the Science of Machines)

SUBMITTED: 20Jul64 ENCL: 00 SUB CODE: MM

NO REF SOV: 001 OTHER: 000 ATD PRESS: 3209

Card 2/2

APPROVED FOR RELEASE: 03/14/2001 CIA-RDP86-00513R001342810020-0"

"APPROVED FOR RELEASE: 03/14/2001 CIA-RDP86-00513R001342810020-0

L 35013-65 EWP(e)/EWT(m)/EWP(w)/EPF(c)/EPF(n)-2/EWG(m)/EWA(d)/T/EWP(t)/EWP(b)/A

TTR Pr-4/Ps-4/Pu-4 IJP(c) JD/JG/DJ/AT/WH

ACCESSION NR: AP5007559 S/0020/65/160/005/1057/1060

AUTHOR: Semenov, A. P.; Pozdnyakov, V. V.

TITLE: Spontaneous transition of the sliding friction to rolling friction in high-temperature testing of refractory carbides

SOURCE: AN SSSR. Doklady, v. 160, no. 5, 1965, 1057-1060

TOPIC TAGS: friction, sliding friction, rolling friction, high temperature friction, friction spontaneous transition, vacuum friction

ABSTRACT: A spontaneous change from sliding to rolling friction was observed during high-temperature tests of friction between molybdenum-carbide or vanadium-carbide specimens in a vacuum. In the tests with molybdenum-carbide specimens, an increase in temperature to 1250C sharply increased the friction moment under unchanged load. At about 1700C the friction coefficient rose to almost 1.0, after which, however, the load (applied by a flat spring) increased spontaneously and the friction moment sharply decreased as the friction coefficient decreased to 0.19 and then to 0.09. Examination of the contact surfaces revealed the presence of rounded particles of molybdenum carbide about 1.5 mm in diameter and fairly wide and deep grooves with smooth, bright surfaces. A reverse transition from rolling to sliding friction with the friction coefficient somewhat lower than the initial was observed with

Card 1/2

APPROVED FOR RELEASE: 03/14/2001 CIA-RDP86-00513R001342810020-0"

"APPROVED FOR RELEASE: 03/14/2001 CIA-RDP86-00513R001342810020-0

L 35013-65
ACCESSION NR: AP5007559

decreasing temperature. A similar phenomenon was observed in specimens of vanadium carbide. It appears that with increasing temperature, the investigated carbides become more susceptible to seizing and plastic deformation. Under certain conditions, the torn-out particles begin to roll between the surfaces and to grow in size like a snowball. The bodies of rotation thus formed attain an equilibrium for the given conditions and roll in the grooves which are gradually formed on the friction surfaces. With gradually decreasing temperature, the seizing stops and the bodies of rotation cannot maintain their size. This results in wear or crushing of the extant bodies of rotation and in a reverse transition from rolling to sliding friction. Orig. art. has: 4 figures. [MS]

ASSOCIATION: Gosudarstvennyy nauchno-issledovatel'skiy institut mashinovedeniya (State Scientific Research Institute of Machine Science)

SUBMITTED: 20Jul64 ENCL: 00 SUB CODE: MT

NO REF SOV: 001 OTHER: 000 ATD PRESS: 3216

Card 2/2

APPROVED FOR RELEASE: 03/14/2001 CIA-RDP86-00513R001342810020-0"

"APPROVED FOR RELEASE: 03/14/2001 CIA-RDP86-00513R001342810020-0

POZDNYAKOV, V.Ya.; LESHKE, G.P.; ZAKHAROV, M.I.

Some advantages and disadvantages of the electric smelting of ores for matte. TSvet.met. 28 no.4:41-44 Jl-Ag '55. (MIRA 10:11)

1. Kombinat "Severonikel'."
(Smelting)

APPROVED FOR RELEASE: 03/14/2001 CIA-RDP86-00513R001342810020-0"