"APPROVED FOR RELEASE: 09/19/2001 CIA-RDP86-00513R001343320018-6

89361

S/089/61/010/002/011/018
B102/B209

The technique of ...

part is an ionization fission chamber. The pulses generated in both canals of the chamber reach, via the amplifiers I and III, the double-coincidence circuit II (time resolution 0.5 μsec). The pulses are counted in IV by a mechanical counting device. The fission chamber is brass filled with argon and sealed hermetically. It contains the following: 1) a U_3O_8 preparation (90% U^{235}, ~0.1 mg/cm^2) upon an Al foil (0.4 mg/cm^2), 2) collimators, 3) a set of differently thick foils of the metal to be examined, 4) collector electrodes. Collimator thickness and argon pressure (~100 mm Hg) were chosen so as to keep the fragment energy losses in the collimator negligibly low. This arrangement excludes counting of spurious pulses (from γ-quanta or recoil nuclei); all measurements may be carried out at the reactor at a thermal neutron flux of between 10^6 and 10^8 n/cm^2 sec. In order to illustrate the operation of the device, the determination of the ranges and specific energy losses for fragments with equal range is discussed. Zero thickness of the material in which the range is to be examined gives rise to N_0 coinciding pulses. The number of coincidences decreases if d rises for the same amount in each of the channels. At a certain $d = d_c$, the num-

Card 2/4

APPROVED FOR RELEASE: 09/19/2001 CIA-RDP86-00513R001343320018-6"

"APPROVED FOR RELEASE: 09/19/2001 CIA-RDP86-00513R001343320018-6

89361

S/089/61/010/002/011/018
B102/B209

The technique of ...

ber of coincidences becomes zero or drops to a minute fraction (α) of N_0, according to the sensitivity of the detector; thus, d_c characterizes the range of the fragments. The specific energy losses are determined as follows: Foil sets with $d = d_c$ of a material whose range dependence of the specific losses is known are inserted into both canals. Then, in one canal all foils, one after the other, are replaced by foils of the material to be examined; on this occasion, these foils must have such a thickness that the number of pulses does not vary on exchange. In this way the specific energy losses can be determined for all ranges. Range and specific energy loss of heavy and light fragments may be determined separately, too. For this purpose, N_0 is determined as before, then the foils to be investigated are successively removed from one canal until the number of coincidences becomes small with respect to N_0. By this processing, the fragments of maximum range are separated. Then, the foils from the second canal are successively removed until the number of coincidences is equal to zero. The number of foils in the second canal now characterizes the range of the heavy fragments. The energy losses are determined analogously. Finally, the yield-to-range curves for Au and Al as determined by this method are compared

Card 3/4

APPROVED FOR RELEASE: 09/19/2001 CIA-RDP86-00513R001343320018-6"

"APPROVED FOR RELEASE: 09/19/2001 CIA-RDP86-00513R001343320018-6

89361

S/089/61/010/002/011/018
B102/B209

The technique of ...

with the results of other authors. Agreement with Ref. 2 is not good; it is good, however, with Ref. 4. There are 4 figures and 5 references: 3 Soviet-bloc and 2 non-Soviet-bloc.

SUBMITTED: November 21, 1959

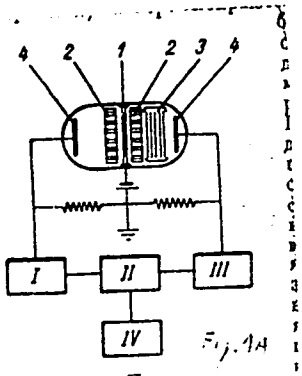

Fig. 4a

Card 4/4

APPROVED FOR RELEASE: 09/19/2001 CIA-RDP86-00513R001343320018-6"

"APPROVED FOR RELEASE: 09/19/2001 CIA-RDP86-00513R001343320018-6

S/170/61/004/009/012/013
B104/B125

AUTHORS: Protopopov, N. A., Kul'gavchuk, V. M.

TITLE: Determination of the sublimation energy of the system Pd-H by a pulse method

PERIODICAL: Inzhenerno-fizicheskiy zhurnal, v. 4, no. 9, 1961, 102-103

TEXT: The authors determined the integral sublimation energy of the system Pd-H. For this purpose, they developed a pulse method which relies on the determination of the energy limit of the current interruption that is caused by pulse heating. That means that the minimum energy required for a complete evaporation of the test specimen is to be determined. The experimental arrangement was described in a previous paper of the authors ("Pribory i tekhnika eksperimenta", no. 1, 85, 1960). In order to ensure the necessary current-pulse duration in the discharge circuit of the arrangement, an additional coil having an inductance of 1.4μ h was used. With the aid of such an arrangement, it is possible to heat a palladium specimen electrolytically saturated with hydrogen when sending a current

Card 1/3

APPROVED FOR RELEASE: 09/19/2001 CIA-RDP86-00513R001343320018-6"

"APPROVED FOR RELEASE: 09/19/2001 CIA-RDP86-00513R001343320018-6

pulse through it. The sublimation energy is calculated from the time of current interruption which occurs as soon as a certain maximum current strength has been attained. The specimens wires were 0.1 mm in diameter and 25 mm in length. The sublimation energy was calculated from the current and voltage oscillograms which had been photographed from the screen of an oscilloscope. An analyse of this oscillogram showed that in the α-phase ($0 \leqslant C \leqslant 0.03$; C = H/Pd), the sublimation energy is sharply diminished with increasing hydrogen content (dE/dC = 400 kcal/gram-atom). dE/dC vanishes when the β-phase appears ($0.23 \leqslant C \leqslant 0.46$). Here, the sublimation energy amounts to 56 kcal/gram-atom of Pd. With a further rise of the hydrogen content, the sublimation energy again increases, and it amounts to 69 kcal/gram-atom of Pd at C = 0.78. According to numerical evaluations, the decrease of sublimation energy in the α-phase from 100 to 88 kcal cannot be attributed to an increase of the lattice parameters. Furthermore, the β-phase is more stable than the mixed one ($\alpha + \beta$). F. V. Kashin and A. V. Zakharova are thanked for assistance in experiments. There are 1 figure and 5 references: 4 Soviet and 1 non-Soviet. The reference to an English-language publication reads as follows: Smith D. P.,

APPROVED FOR RELEASE: 09/19/2001 CIA-RDP86-00513R001343320018-6"

"APPROVED FOR RELEASE: 09/19/2001 CIA-RDP86-00513R001343320018-6

Determination of the sublimation... S/170/61/004/009/012/013
B104/B125

Hydrogen in Metals. The University of Chicago Press. Chicago, 1948.

SUBMITTED: April 3, 1961

Card 3/3

APPROVED FOR RELEASE: 09/19/2001 CIA-RDP86-00513R001343320018-6"

"APPROVED FOR RELEASE: 09/19/2001 CIA-RDP86-00513R001343320018-6

22110

S/057/61/031/005/007/020
B104/B205

26.2311

AUTHORS: Protopopov, N. A. and Kul'gavchuk, V. M.

TITLE: Occurrence of current flow interruptions and formation of shock waves in rapid heating of metal by electric pulses of high current density

PERIODICAL: Zhurnal tekhnicheskoy fiziki, v. 31, no. 5, 1961, 557-564

TEXT: The behavior of metals at high temperatures and pressures can be studied by heating the material with current pulses. The maximum temperature obtainable in this way is 63000°C. Further increase of temperature is limited by a momentary interruption of the current flow into the metal, which also stops the input of energy. The authors studied the explosive melting of metals, which is caused by current pulses. The duration of the initial pulse varied from $2 \cdot 10^{-7}$ to $1.5 \cdot 10^{-6}$ sec, and the total duration of the experiment did not exceed 4 μsec. The study included the mechanisms of metal heating, of the occurrence of current flow interruptions, and of the formation of shock

Card 1/6

APPROVED FOR RELEASE: 09/19/2001 CIA-RDP86-00513R001343320018-6"

"APPROVED FOR RELEASE: 09/19/2001 CIA-RDP86-00513R001343320018-6

22776
S/057/61/031/005/007/020
B104/B205

Occurrence of...

waves and light flashes of optical emission. Theoretical considerations are based on the assumption that a metal is a system of particles interacting through their Coulomb forces. The mechanism of metal evaporation by current is discussed on a kinetic basis. The occurrence of current interruptions is ascribed to the sharp decrease of binding forces caused by the enlargement of the lattice distance. Thus, the conduction electrons undergo a process that is reverse to the "collectivization" occurring during the condensation of metal vapor. This process is called "decollectivization", and is regarded as the cause of the loss of conductivity and, consequently, of the current interruption. The authors examined the rate of development of current interruptions for a metal into which not more than the sublimation energy was introduced. It could be shown that the sublimation energy is the minimum required for the occurrence of current interruptions. Table 1 contains the minimum values of energy introduced into various metals, at which current interruptions still occur. An investigation of the current drop during a current interruption at different rates of energy supply can give valuable information on such gasdynamic quantities as the velocity of rarefaction waves, the velocity of the "decollectivization" front, etc. Fig. 2 shows oscillo-

Card 2/6

APPROVED FOR RELEASE: 09/19/2001 CIA-RDP86-00513R001343320018-6"

"APPROVED FOR RELEASE: 09/19/2001 CIA-RDP86-00513R001343320018-6

S/057/61/031/005/007/020
B104/B205

Occurrence of...

grams of current (a) and voltage (b) at the wire, as well as light flashes (c). The diagram (d) graphically shows the energy supply in the first phase of explosion of a copper wire at a voltage of 18.5 kw. It is shown that temperature increases with decreasing velocity of rarefaction waves, i.e., higher temperatures are reached in metals in which the velocity of sound is low. Next, the authors investigate the energy released by loading a circuit consisting of the variable parameters R(t) and L(t), which is practically an unknown quantity. Finally, it is shown that the physical parameters of the metals examined have an essential influence on the development of current interruptions (Fig. 5). The absence of current interruptions in tungsten, tantalum, molybdenum, and zirconium, observed in experiments in air, is ascribed to their strong thermionic emission, which causes conduction on the surface of the specimens. For comparison, experiments were made in air and with specimens sealed in glass, which support this opinion (Fig. 6). A. A. Bezrukov and F. V. Kashin are thanked for a number of experiments. There are 6 figures, 1 table, and 9 references: 3 Soviet-bloc and 6 non-Soviet-bloc.

SUBMITTED: June 16, 1960

Card 3/6

22776

APPROVED FOR RELEASE: 09/19/2001 CIA-RDP86-00513R001343320018-6"

"APPROVED FOR RELEASE: 09/19/2001 CIA-RDP86-00513R001343320018-6

L 8134-66

ACC NR: AP5025057 SOURCE CODE: UR/0286/65/000/016/0098/0099

AUTHORS: Protopopov, N. G.; Sternzat, M. S.; Yefremychev, V. I.; Protopopova, B. I.

ORG: none

11
B

TITLE: Remote anemorhumbograph. Class 42, No. 173993

SOURCE: Byulleten' izobreteniy i tovarnykh znakov, no. 16, 1965, 98-99

TOPIC TAGS: wind direction instrument, wind velocity, wind meter

ABSTRACT: This Author Certificate presents a remote anemorhumbograph containing a wind sensor in the form of a four-bladed propeller fastened to the front part of a drop-shaped hull with an empennage as a wind vane, a tachometer-generator, and two selsyn-detectors (see Fig. 1). To record the average and instantaneous wind velocity on a common scale of the recorder tape, the wind sensor shaft is coupled to the tachometer-generator using bevel gears and to the selsyn-detector through a reductor. The number of revolutions of the wind sensor during a given time interval is transformed into the angular displacement of the selsyn rotor. To record the instantaneous wind velocity as the total velocity profile or as the excess over the average wind velocity, the average wind velocity recorder carriage is provided with a switching pin which lifts the pen with its passage through the average velocity line or limits

Card 1/3 UDC: 621-519:551.508.5

APPROVED FOR RELEASE: 09/19/2001 CIA-RDP86-00513R001343320018-6"

"APPROVED FOR RELEASE: 09/19/2001 CIA-RDP86-00513R001343320018-6

L 8134-66

ACC NR: AP5025057

0

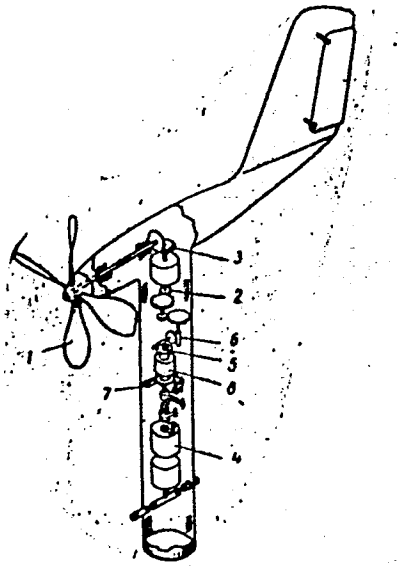

Fig. 1. 1- wind-sensor; 2- tachometer-generator; 3- bevel gears; 4- selsyn-detector; 5- reductor axle; 6- recorder; 7- catch; 8- differential

the pen motion up to this line. To protect the mechanism producing the average wind velocity from breakage with velocity values exceeding the upper measurement limit, the mechanism is provided with a limiting device which disconnects the selsyn-detector from the summing mechanism with a lever. The lever deflects a catch from

Card 2/3

APPROVED FOR RELEASE: 09/19/2001 CIA-RDP86-00513R001343320018-6"

"APPROVED FOR RELEASE: 09/19/2001 CIA-RDP86-00513R001343320018-6

L 8134-66

ACC NR: AP5025057

0

the differential ratchet wheel when the average wind velocity reaches the upper measurement limit. Orig. art. has: 1 diagram.

SUB CODE: ES/ SUBM DATE: 15Jan62

Card 3/3 gw

APPROVED FOR RELEASE: 09/19/2001 CIA-RDP86-00513R001343320018-6"

"APPROVED FOR RELEASE: 09/19/2001 CIA-RDP86-00513R001343320018-6

L 23293-66 EWT(1)/FCC GW

ACC NR: AP6012161 SOURCE CODE: UR/0413/66/000/007/0081/0081

INVENTOR: Protopopov, N. G.; Grushin, S. I.

ORG: none

36
B

TITLE: Wind-parameter sensor. Class 42, No. 180415

SOURCE: Izobreteniya, promyshlennyye obraztsy, tovarnyye znaki, no. 7, 1966, 81

TOPIC TAGS: meteorologic instrument, wind measuring set, anemometer, telemetry

ABSTRACT: A sensor is described for measuring wind parameters to be used in automatic telemetering of meteorological data. The device includes a wind recorder (airscrew), a streamlined casing with a shaft used like a pressure vane, a windmill pulse rpm converter, a selsyn for sensing wind-direction angles, units for processing mean and maximum wind velocities, and a wind-direction angle converter (see Fig. 1). This device differs in that its pulse converter is connected to the mean velocity data-processing unit, which has computer cells connected to the synchronizing unit and to the memory unit of the set; this arrangement makes it possible for the central part of the set to measure mean wind velocities averaged over one-min intervals and

Card 1/2 UDC: 551.508.5

APPROVED FOR RELEASE: 09/19/2001 CIA-RDP86-00513R001343320018-6"

"APPROVED FOR RELEASE: 09/19/2001 CIA-RDP86-00513R001343320018-6

L 23293-66

ACC NR: AP6012161

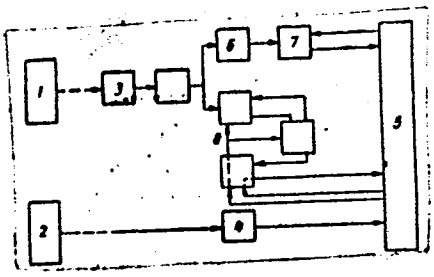

Fig. 1. Diagram of wind-measuring set

1 - Wind sensor; 2 - wind vane; 3 - propeller rpm converter; 4 - wind-direction angle converter; 5 - central part of set; 6 - computer cells; 7 - counter; 8 - digital computer device.

maximum instantaneous wind velocities for fixed periods. Orig. art. has: 1 figure. [EO]

SUB CODE: 04/ SUBM DATE: 24Apr64/ ATD PRESS: 4230

Card 2/2

APPROVED FOR RELEASE: 09/19/2001 CIA-RDP86-00513R001343320018-6"

"APPROVED FOR RELEASE: 09/19/2001 CIA-RDP86-00513R001343320018-6

PROTOPOPOV, N.G.

Method and apparatus for "sliding" determination of mean values and their use in wind velocity measurements. Trudy GGO no. 103:103-112 '60. (MIRA 14:2)

(Winds) (Tachometer)

APPROVED FOR RELEASE: 09/19/2001 CIA-RDP86-00513R001343320018-6"

"APPROVED FOR RELEASE: 09/19/2001 CIA-RDP86-00513R001343320018-6

30188
S/194/61/000/008/023/092
D201/D304

3,5800

AUTHORS: Karpusha, V.Ye., Protopopov, N.G., Sternzat, M.S. and Sharonova, G.S.

TITLE: The M-45 automatic recorder of average wind velocity and direction

PERIODICAL: Referativnyy zhurnal. Avtomatika i radioelektronika, no. 8, 1961, 18, abstract 8 V152 (Tr. Gl. Geofiz. observ., 1960, no. 103, 93-102)

TEXT: The wind speed is measured by a 3-cup vane, connected through a reducing gear selsyn transducer БС-404 (BS-404). A similar selsyn is connected to the axis of a weather vane measuring the wind direction. The automatic recorder is connected to the unit by an 8-core cable. The average velocity of the wind is determined from the angle of rotation of the receiving selsyn every 10 minutes by means of a mechanical arrangement. The latter consists of a reduction gear with a ratchet, whose pawl frees the output

Card 1/2

APPROVED FOR RELEASE: 09/19/2001 CIA-RDP86-00513R001343320018-6"

"APPROVED FOR RELEASE: 09/19/2001 CIA-RDP86-00513R001343320018-6

30488
S/194/61/000/008/023/092
D201/D304

The M-45 automatic recorder...

shaft every 10-minute period. The output shaft is connected to the step of the recorder pen which is pressed down by the unbalance weight at the end of every period and then braked. The wind direction is recorded by a 3-pen recording system operated by the receiving selsyn. Only one pen is operated, which is changed every full revolution of the weather vane. The recording is made on a single chart strip drawn by a synchronous motor. The accuracy of the recorder is ± 5% for velocity and ± 10% for direction. 7 figures. 4 references. [Abstracter's note: Complete translation]

X

Card 2/2

APPROVED FOR RELEASE: 09/19/2001 CIA-RDP86-00513R001343320018-6"

"APPROVED FOR RELEASE: 09/19/2001 CIA-RDP86-00513R001343320018-6

PROTOPOPOV, N. G. and FINKEL', Ye. A.

"The Etiology of Dysentery in Children's Summer Diarrhea," Sbornik Nauchnykh Trudov Kirgizskogo Gosudarstvennogo Meditsinskogo Instituta, Frunze, Vol 7, 1951, pp 259-263.

APPROVED FOR RELEASE: 09/19/2001 CIA-RDP86-00513R001343320018-6"

"APPROVED FOR RELEASE: 09/19/2001 CIA-RDP86-00513R001343320018-6

32901
S/194/61/000/011/008/070
D256/D302

3,5800 (1395)

AUTHOR: Protopopov, N.G.

TITLE: An arrangement for "slipping" averaging and its application for recording wind velocity

PERIODICAL: Referativnyy zhurnal. Avtomatika i radioelektronika, no. 11, 1961, 19, abstract 11 A154 (Tr. Gl. geofiz. observ., 1960, no. 103, 103-112)

TEXT: A description is given of a method and instrument devised for averaging certain meteorological parameters over long enough time intervals by means of a "slipping" averaging interval τ. Averaging of a parameter V is described by means of the expression

$$V_{\tau} = \frac{1}{\tau} \int_{t}^{t+\tau} v(t)dt.$$

The instrument consists of an averaging electromechanical tachometer

Card 1/2

APPROVED FOR RELEASE: 09/19/2001 CIA-RDP86-00513R001343320018-6"

"APPROVED FOR RELEASE: 09/19/2001 CIA-RDP86-00513R001343320018-6

32901

S/194/61/000/011/008/070
D256/D302

An arrangement for "slipping"...

with a programming arrangement providing the "memory" for a time τ (from 10 sec. upwards). A method is presented and an arrangement described for simultaneous registration on a common scale of both the mean and instant values of wind velocity, using the principle of "slipping" averaging. 6 figures. 8 references. [Abstracter's note: Complete translation]

Card 2/2

APPROVED FOR RELEASE: 09/19/2001 CIA-RDP86-00513R001343320018-6"

"APPROVED FOR RELEASE: 09/19/2001 CIA-RDP86-00513R001343320018-6

PROTOPOPOV, N.G.

Method and apparatus for averaging the wind velocity vector.
Trudy GGO no.135:147-156 '62. (MIRA 15:8)
(Winds—Measurement) (Meteorological instruments)

APPROVED FOR RELEASE: 09/19/2001 CIA-RDP86-00513R001343320018-6"

"APPROVED FOR RELEASE: 09/19/2001 CIA-RDP86-00513R001343320018-6

ACCESSION NR: AT4033566 S/2922/63/009/000/0166/0181

AUTHOR: Protopopov, N. G.

TITLE: Present status and prospects for development of wind parameter measurements

SOURCE: Vsesoyuznoye nauchnoye meteorologicheskoye soveshchaniye. 1st, Leningrad, 1961. Pribory* i metody* nablyudeniy (Instruments and methods of observation); trudy* soveshchaniya, v. 9. Leningrad, Gidrometeoizdat, 1963, 166-181

TOPIC TAGS: meteorology, meteorological instrument, wind, wind parameter, anemorhumbometer, anemorhumbograph, wind direction, wind velocity, anemometer

ABSTRACT: The GUGMS SSSR (Main Administration of the Hydrometeorological Service of the SSSR) is presently developing a set of wind-measurement instruments, including an anemorhumbometer and an anemorhumbograph. The two instruments will have sensing elements in common but the first will measure and the second record the mean and instantaneous wind velocity and its direction. In both instruments the measured wind parameter values are converted to electric pulses. Mean wind velocity is measured by determining the path traveled by an air current during a period of averaging; during this time the wind sensor makes a certain number of revolutions proportional to the length of the path traveled by the flow. The angle of mean wind velocity is transmitted to the control panel by selsyns of the

Card 1/3

APPROVED FOR RELEASE: 09/19/2001 CIA-RDP86-00513R001343320018-6"

"APPROVED FOR RELEASE: 09/19/2001 CIA-RDP86-00513R001343320018-6

ACCESSION NR: AT4033566

anemorhumbometer; the same function is performed in the anemorhumbograph by a servomechanism. The same selsyns are used for transmission of the position angle of the vane in wind direction measurement. The anemorhumbograph differs from other such instruments in that the mean and instantaneous values are recorded on the same tape at the same scale. Wind velocity is recorded in three variants and wind direction in two. The anemorhumbograph recorder has several rates of paper movement. The need for development of printing anemorhumbographs is noted. The Glavnaya geofizicheskaya observatoriya (Main Geophysical Observatory) has proposed a number of devices (Trudy GGO, No. 103, 1960) for averaging registered values by the moving averages method, making it possible to read the mean velocity value for any moment of time. It also is noted that one of the inadequacies of existing wind instruments is that there is no averaging of wind direction; the author has proposed a method and apparatus for solution of this problem, and describes them in this paper. The proposed instrument makes it possible to average wind direction spatially and at the same time smooth individual gusts. Averaging of the wind vector is discussed in detail. It is shown that true mean velocity and true mean direction can be determined only by averaging the wind velocity vector but at the present time wind measurement instruments make it possible to obtain only the mean value of the wind velocity modulus. A method and apparatus developed at the Main Geophysical Observatory for averaging the wind vector is described. Orig. art. has: 10 formulas and 9 figures.

Card 2/3

APPROVED FOR RELEASE: 09/19/2001 CIA-RDP86-00513R001343320018-6"

"APPROVED FOR RELEASE: 09/19/2001 CIA-RDP86-00513R001343320018-6

ACCESSION NR: AT4033566

ASSOCIATION: Glavnaya geofizicheskaya observatoriya (Main Geophysical Observatory)

SUBMITTED: 00 DATE ACQ: 16Apr64 ENCL: 00

SUB CODE: ES NO REF SOV: 018 OTHER: 000

Card 3/3

APPROVED FOR RELEASE: 09/19/2001 CIA-RDP86-00513R001343320018-6"

"APPROVED FOR RELEASE: 09/19/2001 CIA-RDP86-00513R001343320018-6

DASHKEVICH, L.L.; SURAZHSKIY, D.Ya.; USOL'TSEV, V.A.; AZBEL', M.Ye.; BOZHEVIKOV, S.N.; VORZHENEVSKIY, N.S.; MANUYLOV, K.N.; GLAZOVA, Ye.F.; KARPUSHA, V.Ye.; PROTOPOPOV, N.G.; SHADRINA, Ye.N.; IGRUNOV, V.D.; NECHAYEV, I.N.; BESPALOV, D.P.; ILLARIONOV, V.I.; GLEBOV, F.A.; GLAZOVA, Ye.F.; KAULIN, N.Ya.; GORYSHIN, V.I.; GAVRILOV, V.A.; TIMOFEYEV, M.P., retsenzent; YEFREMYCHEV, V.I., retsenzent; KRASOVSKIY, V.B., retsenzent; V'YUNNIK, A.P., retsenzent; STERNZAT, M.S., otv. red.; RUSIN, N.P., otv. red.; YASNOGORODSKAYA, M.M., red.; VOLKOV, N.V., tekhn. red.

[Instructions to hydrometeorological stations and posts] Nastavlenie gidrometeorologicheskim stantsiiam i postam. Leningrad, Gidrometeoroizdat. No.3. Pt.3. [Meteorological instruments and observation methods used on a hydrometeorological network] Meteorologicheskie pribory i metody nabliudenii, primeniaemye na gidrometeorologicheskoi seti. 1962. 295 p. (MIRA 15:5)

(Continued on next card)

APPROVED FOR RELEASE: 09/19/2001 CIA-RDP86-00513R001343320018-6"

"APPROVED FOR RELEASE: 09/19/2001 CIA-RDP86-00513R001343320018-6

DASHKEVICH, L.L.— (continued) Card 2.

1. Russia (1923- U.S.S.R.) Glavnoye upravleniye gidrometeorologicheskoy sluzhby. 2. Glavnaya geofizicheskaya observatoriya Nauchno-issledovatel'skogo instituta gidrometeorologicheskikh priborov i Gosudarstvennogo gidrologicheskogo instituta (for Dashkevich, Surazhskiy, Usol'tsev, Azbel', Bozhevikov, Vorzhenevskiy, Manuylov, Glazova, Karpusha, Protopopov, Shadrina, Igrunov, Nechayev, Bospalov, Illarionov, Glebov, Glazova, Kaulin, Gorysnin, Gavrilov). 3. Komissiya Glavnogo upravleniya gidrometeorologicheskoy sluzhby pri Sovete Ministrov SSSR (for Nechayev, Usol'tsev, Timofeyev, Yefremychev, Krasovskiy, V'yunnik)
(Meteorology)

APPROVED FOR RELEASE: 09/19/2001 CIA-RDP86-00513R001343320018-6"

"APPROVED FOR RELEASE: 09/19/2001 CIA-RDP86-00513R001343320018-6

KARPUSHA, V.Ye.; PROTOPOPOV, N.G.; STERNZAT, M.S.; SHARGNOVA, G.S.

The [illegible]-45 [illegible] c[illegible]ding of the [illegible] velocity nd [illegible] of winds. Trudy [illegible] ([illegible] 14:2)

(Meteorological instruments) (Winds)

APPROVED FOR RELEASE: 09/19/2001 CIA-RDP86-00513R001343320018-6"

"APPROVED FOR RELEASE: 09/19/2001 CIA-RDP86-00513R001343320018-6

PROTOPOPOV, N.I., kand.med.nauk

Effect of manganese ore dust on the mucous membranes of the upper respiratory tract in animals [with summary in English]. Vest.oto.-rin. 20 no.3:61-65 My-Je '58 (MIRA 11:6)

1. Iz kafedry bolezney ukha, gorla i nosa (zav. - prof. L.A. Lukovskiy) i kafedry patologicheskoy anatomii (zav. prof. I.I. Medvedev) Dnepropetrovskogo meditsinskogo instituta.

(MANGANESE, eff.
dust, on mucous membranes of upper resp. tract in animals (Rus))

(RESPIRATORY TRACT, for, bodies
manganese dust, eff. on mucous membranes of upper tract in animals (Rus))

APPROVED FOR RELEASE: 09/19/2001 CIA-RDP86-00513R001343320018-6"

"APPROVED FOR RELEASE: 09/19/2001 CIA-RDP86-00513R001343320018-6

PROTOPOPOV, N. I.

"The effect of dust from manganese mines on the mucosa of the upper respiratory tracts." Min Health Ukrainian SSR. Dnepropetrovsk State Medical Inst. Dnepropetrovsk, 1956. (Dissertations for the Degree of Candidate in Medical Science)

So: Knizhaya letopis', No. 16, 1956

APPROVED FOR RELEASE: 09/19/2001 CIA-RDP86-00513R001343320018-6"

"APPROVED FOR RELEASE: 09/19/2001 CIA-RDP86-00513R001343320018-6

PROTOPOPOV, N.I.

Condition of the upper respiratory tract in manganese miners. Vest. oto-rin. 18 no.5:34-38 S-O '56. (MLRA 9:11)

1. Iz kafedry bolezney ukha, gorla i nosa (zav. - prof. L.A.Lukovskiy) Dnepropetrovskogo meditsinskogo instituta.

(RESPIRATORY TRACT, dis.
in manganese miners, upper resp. tract dis.)
(OCCUPATIONAL DISEASES,
upper resp. tract dis. in manganese miners)

APPROVED FOR RELEASE: 09/19/2001 CIA-RDP86-00513R001343320018-6"

"APPROVED FOR RELEASE: 09/19/2001 CIA-RDP86-00513R001343320018-6

BELYAYEV, Ivan Kliment'yevich; PROTOPOPOV, N.N., dotsent, nauchnyy red.; USHAKOVA, L.A., red.; SUBBOTINA, G.M., tekhn.red.

[Socialist industrialization of Western Siberia] Sotsialisticheskaia industrializatsiia Zapadnoi Sibiri. Red.N.N.Protopopov. Novosibirsk, Novosibirskoe knizhnoe izd-vo, 1958. 252 p. (MIRA 12:9)

(Siberia, Western--Industries)

APPROVED FOR RELEASE: 09/19/2001 CIA-RDP86-00513R001343320018-6"

"APPROVED FOR RELEASE: 09/19/2001 CIA-RDP86-00513R001343320018-6

PROTOPOPOV, N.N.

SOV/133-59-9-17/31

AUTHORS: Ilyushin, N.L., Candidate of Technical Sciences, Managin, Yu.V., Konyushenko, A.T., Golovkin, R.V. and Protopopov, N.N., engineers

TITLE: Mastering of the Production of Tubes by Atomic Hydrogen Welding

PERIODICAL: Stal', 1959, Nr 9, pp 821-827 (USSR)

ABSTRACT: In view of some difficulties in piercing tube billets from some alloy steels and a high consumption of metal in subsequent rolling, the production of tubes from such steels by atomic hydrogen welding of strip should be more economical. After investigations of the process by TsNIIChM and the Moscow Tube Works on an industrial plant for the automatic atomic hydrogen welding of tubes was developed. Conditions of stability of welding arc on the diameter of electrodes and their holders supplying hydrogen - table 1; the dependence of electric parameters of the arc on the rate of the supply of hydrogen and the distance between the centres of electrodes - [illegible] 3 and 4 respectively. The installation for the production of alloy tube consists of a modified tube forming stand of the type 10 - 60, six arcs automatic welding head with a control panel, welding transformers and a system of pipes,

Card 1/2

gas and water conduits (Fig 5). The welding head - Fig 6; scheme for automatic control - Fig 7. [illegible] conditions for steels 1Kh18N9, Kh12N10, [illegible] 50KhFA - Table 2; results of testing of welded [illegible] - Table 3; macro and microstructure of welded [illegible] - Fig 3 and 9 respectively. The results of [illegible] welded tubes indicated that their properties [illegible] to standards for seamless stainless steel [illegible] There are 9 figures and 3 tables.

AFFILIATION: TsNIIChM
Moskovskiy trubnyy zavod (Moscow Tube Works)

APPROVED FOR RELEASE: 09/19/2001 CIA-RDP86-00513R001343320018-6"

"APPROVED FOR RELEASE: 09/19/2001 CIA-RDP86-00513R001343320018-6

PROTOPOPOV, N.N., red.

[Novosibirsk; its economic geography] Novosibirsk [ekonomiko-geograficheskaia kharakteristika. Avtory: N.N. Protopopov, et al. Novosibirsk] Novosibirskoe knizhnoe izd-vo, 1957. 238 p. (MIRA 11:10)
(Novosibirsk)

APPROVED FOR RELEASE: 09/19/2001 CIA-RDP86-00513R001343320018-6"

"APPROVED FOR RELEASE: 09/19/2001 CIA-RDP86-00513R001343320018-6

ZOBACHEV, I.G.; UGRENINOV, N.G.; PROTOPOPOV, N.N.; ZHUKOVSKIY, N.I.; KHRAMOV, A.S.; RYABOV, I.S.; LAZOVNIKOV, M.A., tekhn. red.

[The city of Novosibirsk and Novosibirsk Province]Gorod Novosibirsk i Novosibirskaia oblast'. Novosibirsk, Novosibirskoe oblastnoe upravlenie "Poligrafizdat," 1948. 166 p. (MIRA 16:1)

(Novosibirsk) (Novosibirsk Province)

APPROVED FOR RELEASE: 09/19/2001 CIA-RDP86-00513R001343320018-6"

"APPROVED FOR RELEASE: 09/19/2001 CIA-RDP86-00513R001343320018-6

PROTOPOPOV, N. N.

"Novosibirsk Region. Fundamentals of Physical Geography." Thesis for degree of Cand. Geographical Sci. Sub 21 Jun 49, Inst of Geography, Acad Sci USSR.

Summary 82, 18 Dec 52, Dissertations Presented For Degrees in Science and Engineering in Moscow in 1949. From Vechernyaya Moskva, Jan-Dec 1949.

APPROVED FOR RELEASE: 09/19/2001 CIA-RDP86-00513R001343320018-6"

"APPROVED FOR RELEASE: 09/19/2001 CIA-RDP86-00513R001343320018-6

ACCESSION NR: AP4033104 S/0120/64/000/002/0043/0046

AUTHOR: Abesadze, P. D.; Doydzhashvili, G. I.; Litvin, D. F.; Lyashchenko, B. G.; Protopopov, N. N.; Chikobava, V. S.

TITLE: Universal device for neutron-diffraction structure analysis

SOURCE: Pribory* i tekhnika eksperimenta, no. 2, 1964, 43-46

TOPIC TAGS: neutron diffraction, structural analysis, neutron diffraction analysis, diffractometer, neutron collimator, neutron monochromator

ABSTRACT: A new device combining the features of those described by Borst and Sailor (Rev. Scient. Instrum., 1953, 24, 141) and Wollan and Kochler (Phys. Rev., 1955, 100, 545) consists of three mechanically independent components: a neutron collimator 1 (see Enclosure 1), a crystal monochromator 2, and a diffractometer. The collimator is formed by N50 -alloy 0.1-mm sheets with 2-mm gaps. The monochromator includes a Pb 10x80x200-mm plate cut from a

Card 1/3

APPROVED FOR RELEASE: 09/19/2001 CIA-RDP86-00513R001343320018-6"

"APPROVED FOR RELEASE: 09/19/2001 CIA-RDP86-00513R001343320018-6

ACCESSION NR: AP4033104

single crystal and fastened to a goniometer. The diffractometer can be adjusted to any wavelength from 1.5 Å to the "white" radiation. Proportional counters filled with BF_3 at 400 torr with up to 86% B^{10} are used for neutron detection. Three neutron-diffraction curves are shown; design details are supplied. "The assembling and testing of the first laboratory model of the device were carried out by V. I. Goman'kov, N. V. Grin'kin, S. A. Vyazemskiy, D. F. Litvin, A. A. Loshmanov, and B. G. Lyashchenko." Orig. art. has: 4 figures.

ASSOCIATION: Institut metallovedeniya i fiziki metallov TsNIIChM (Institute of Metal Science and Physics of Metals, TsNIIChM); Institut fiziki AN GruzSSR (Institute of Physics, AN GruzSSR)

SUBMITTED: 30May63 ATD PRESS: 3046 ENCL: 01

SUB CODE: NP NO REF SOV: 001 OTHER: 003

Card 2/3

APPROVED FOR RELEASE: 09/19/2001 CIA-RDP86-00513R001343320018-6"

"APPROVED FOR RELEASE: 09/19/2001 CIA-RDP86-00513R001343320018-6

ENCLOSURE: 01

ACCESSION NR: AP4033104

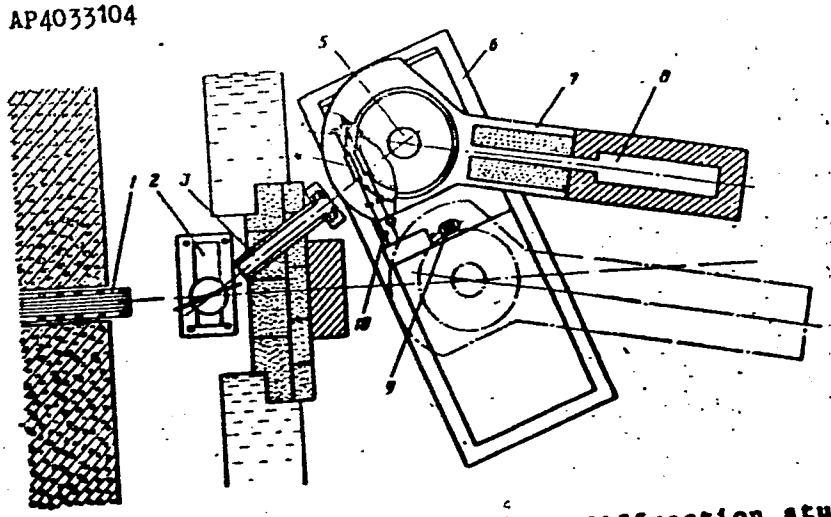

Fig. 1. Universal device for neutron-diffraction studies
1 - Collimator; 2 - crystal monochromator; 3 - channel;
4 - wormgear; 5 - stage; 6 - support plate; 7 - console;
8 - detector; 9 - electric motor; 10- electromagnetic clutch.

Card 3/3

APPROVED FOR RELEASE: 09/19/2001 CIA-RDP86-00513R001343320018-6"

"APPROVED FOR RELEASE: 09/19/2001 CIA-RDP86-00513R001343320018-6

PROTOPOPOV, N.P., starshiy prepodavatel'

Preestarting heating of motor-vehicle engines in winter. Trudy STI 33:38-43 '62.

Characteristics of starting motor-vehicle engines under conditions of low temperatures. Ibid.:44-53 (MIRA 18:6)

APPROVED FOR RELEASE: 09/19/2001 CIA-RDP86-00513R001343320018-6"

"APPROVED FOR RELEASE: 09/19/2001 CIA-RDP86-00513R001343320018-6

PROTOPOPOV, N.P.

Determining the torsional stress in kelly stems of drilling columns. Izv. vys. ucheb. zav.; neft' i gaz 3 no.5:43-50 '60. (MIRA 15:6)

1. Kuybyshevskiy industrial'nyy institut imeni V.V. Kuybysheva.
(Oil well drilling)
(Torsion)

APPROVED FOR RELEASE: 09/19/2001 CIA-RDP86-00513R001343320018-6"

"APPROVED FOR RELEASE: 09/19/2001 CIA-RDP86-00513R001343320018-6

PROTOPOPOV, N.P.

Determination of torsional stresses in grief stems of drill columns by the membrane analogy method. Izv. vys. ucheb. zav.; neft' i gaz 3 no.8:27-31 '60. (MIRA 14:4)

1. Kuybyshevskiy industrial'nyy institut imeni V.V.Kuybysheva.
(Strains and stresses) (Pipe)

APPROVED FOR RELEASE: 09/19/2001 CIA-RDP86-00513R001343320018-6"

"APPROVED FOR RELEASE: 09/19/2001 CIA-RDP86-00513R001343320018-6

PROTOPOPOV, O.A., inzh.

Automatic charging of burners with raw coal. Elek. sta. 36 no.2: 18-21 F '65. (MIRA 18:4)

APPROVED FOR RELEASE: 09/19/2001 CIA-RDP86-00513R001343320018-6"

"APPROVED FOR RELEASE: 09/19/2001 CIA-RDP86-00513R001343320018-6

PAKULIN, V.A., inzh.; PROTOPOPOV, O.A., inzh.

Contactless servosystem. Elek. sta. 36 no.1:84-85 Ja '65. (MIRA 18:3)

APPROVED FOR RELEASE: 09/19/2001 CIA-RDP86-00513R001343320018-6"

"APPROVED FOR RELEASE: 09/19/2001 CIA-RDP86-00513R001343320018-6

BARKOV, N.N., inzh.; PROTOPOPOV, O.A., inzh.

Electric instrument for measuring the fuel level in bunkers. Elek. sta. 29 no.10:88 O '58. (MIRA 11:11)
(Coal—Storage) (Electric instruments)

APPROVED FOR RELEASE: 09/19/2001 CIA-RDP86-00513R001343320018-6"

"APPROVED FOR RELEASE: 09/19/2001 CIA-RDP86-00513R001343320018-6

PROTOPOPOV, O.A. [Protopopov, O.O.]

Pulse conductance of H-hexane. Ukr. fiz. zhur. 8 no.9:1039-1041 S '63. (MIRA 17:8)

1. Dnepropetrovskiy inzhenerno-stroitel'nyy institut.

APPROVED FOR RELEASE: 09/19/2001 CIA-RDP86-00513R001343320018-6"

"APPROVED FOR RELEASE: 09/19/2001 CIA-RDP86-00513R001343320018-6

SOV/166-59-6-9/11

24(3)

AUTHORS: Gofman, I.I., Protopopov, O.D., Shuppe, G.N.

TITLE: Investigation of the Electrostatic Emission of Electrons (EEE) From a Wolframite Emitter Under Impulse Conditions

PERIODICAL: Izvestiya Akademii nauk Uzbekskoy SSR, Seriya fiziko-matematicheskikh nauk, 1959, Nr 6, pp 72 - 77 (USSR)

ABSTRACT: The authors consider impulse measurements of the electrostatic emission of electrons and compare their method and results with the papers of Dyke and others [Ref 3,4,6] and of Barbour and Dolan [Ref 5]. In these papers it is assumed that the emission current is $i_e = \frac{u_2}{R_o}$, where u_2 is the voltage drop on the resistance R_o obtained from the oscillogram. The authors show that this method for calculating i_e can cause essential errors. The relation $u_2 = i_e R_o$ holds with high exactness only at the end of the impulse, if its duration is sufficiently long. Accordingly the volt-ampere characteristics stated by the authors at a

Card 1/2

APPROVED FOR RELEASE: 09/19/2001 CIA-RDP86-00513R001343320018-6"

"APPROVED FOR RELEASE: 09/19/2001 CIA-RDP86-00513R001343320018-6

SOV/166-59-6-9/11

Investigation of the Electrostatic Emission of Electrons (EEE) From a Wolframite Emitter Under Impulse Conditions

wolframite emitter show essential deviations from those given in [Ref 3 - 6]. There are 6 figures, and 6 references, 2 of which are Soviet, and 4 American.

ASSOCIATION: Sredneaziatskiy gosuniversitet imeni V.I. Lenina (Central Asian State University imeni V.I. Lenin)

SUBMITTED: August 20, 1959

Card 2/2

APPROVED FOR RELEASE: 09/19/2001 CIA-RDP86-00513R001343320018-6"

"APPROVED FOR RELEASE: 09/19/2001 CIA-RDP86-00513R001343320018-6

L 29980-66 EWT(m)/T/EWP(t)/ETI IJP(c) JD/WW/JG

ACC NR: AP6012475 SOURCE CODE: UR/0181/66/008/004/1140/1146

AUTHOR: Protopopov, O. D.; Mikheyeva, Ye. V.; Sheynberg, B. N.; Shuppe, G. N. 70

ORG: Tashkent State University (Tashkentskiy gosudarstvennyy universitet) B

TITLE: Emission parameters of tantalum and molybdenum single crystals

SOURCE: Fizika tverdogo tela, v. 8, no. 4, 1966, 1140-1146

TOPIC TAGS: tantalum, molybdenum, crystal, electron emission, work function, crystal lattice structure

ABSTRACT: This is a continuation of earlier work (FTT v. 7, 3759, 1965 and others) devoted to the work function of electrons from different faces of single crystals of tungsten and molybdenum. The present investigation reports similar measurements with large crystals of tantalum, accompanied by new measurements on molybdenum and comparing the results and refining earlier data. Most measurements were made in a cylindrical system of electrodes (Fig. 1), although some were made with a flat system of electrodes used in the earlier experiments. The measurements were made by the Richardson method. The values obtained for the work functions of molybdenum are $\varphi_{110} = 5.00 \pm 0.05$, $\varphi_{112} = 4.55 \pm 0.05$, $\varphi_{100} = 4.40 \pm 0.02$, and $\varphi_{111} = 4.10 \pm 0.02$ ev. The values for tantalum were $\varphi_{110} = 4.80 \pm 0.02$, $\varphi_{100} = 4.15 \pm 0.02$, and $\varphi_{111} = 4.00 \pm 0.02$ ev. The results for tungsten, molybdenum, and tantalum are tabulated and compared, and some of the differences are discussed. It is concluded that for metals with a body-centered cubic lattice the average work function is closest to that in the [100] direction. The difference between the maximum and the minimum work function is

Card 1/2

APPROVED FOR RELEASE: 09/19/2001 CIA-RDP86-00513R001343320018-6"

"APPROVED FOR RELEASE: 09/19/2001 CIA-RDP86-00513R001343320018-6

L 29980-66

ACC NR: AP6012475

Fig. 1. Diagram of cylindrical geometry.
1 - Cathode, 2 - tungsten heater, 3 - thermocouple, 4 - tantalum cone, 5 - ring-carrying rod, 6,7 - quartz insulators, 8 - tension device for heater, 9 - tantalum thrust bearings, 10 - tantalum shunting coils, 11 - glass-coated iron armature, 12 - angle indicator, 13 - anode, 14 - collector slit, 15 - collector screen, 16 - antidynatron diaphragm, 17 - collector, 18 - shielding cylinder, 19 - to pumps, manometer, and getters.

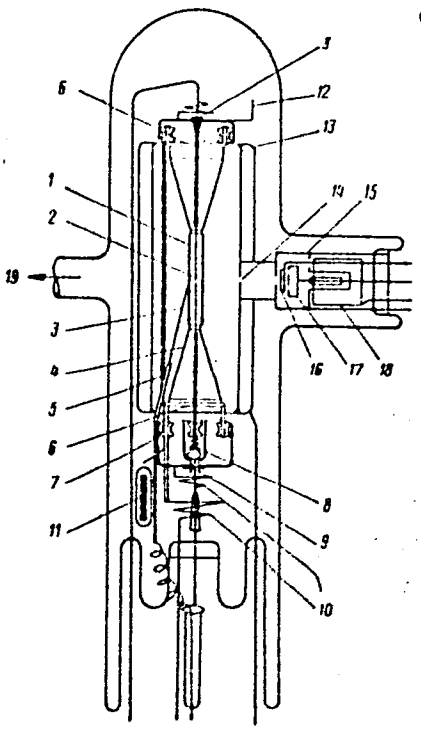

0.9 - 1.0 ev. The lower limit of the values of the work function lies closer to the average than the upper limit. Orig. art. has: 4 tables and 5 figures.

SC: 20/ SUBM DATE: 31Aug65/ ORIG REF: 010/
OTH REF: 003

Card 2/2

APPROVED FOR RELEASE: 09/19/2001 CIA-RDP86-00513R001343320018-6"

"APPROVED FOR RELEASE: 09/19/2001 CIA-RDP86-00513R001343320018-6

81655

S/181/60/002/06/45/050
B006/B056

24.2400

AUTHORS: Gofman, I. I., Protopopov, O. D., Shuppe, G. N.

TITLE: Investigation of the Electrostatic Electron Emission From a Tungsten Emitter in Pulsed Operating Conditions

PERIODICAL: Fizika tverdogo tela, 1960, Vol. 2, No. 6, pp. 1323-1327

TEXT: The pulsed electrostatic electron emission from pure tungsten emitters has already repeatedly been investigated for the purpose of verifying the quantum-mechanical theory of this emission at high current densities. However, the peculiarities occurring in pulsed operation are not sufficiently considered, so that some of the data were found to be faulty. The present paper contains a detailed discussion of the measuring methods, results of the authors' own measurements, and a summary of results. The square pulses used in the so-called pulse measuring method have a duration of 10^{-6} sec; such a pulse is used for the purpose of determining each individual point of the current-voltage characteristic. Fig. 1 shows a general wiring diagram such as is used

Card 1/3

APPROVED FOR RELEASE: 09/19/2001 CIA-RDP86-00513R001343320018-6"

"APPROVED FOR RELEASE: 09/19/2001 CIA-RDP86-00513R001343320018-6

81655

Investigation of the Electrostatic Electron Emission From a Tungsten Emitter in Pulsed Operating Conditions

S/181/60/002/06/45/050
B006/B056

for such measurements. According to the method described measurements were carried out both statically (range of low amperages) and by the pulse method (range of high amperages). The experiments were carried out in projectors with a luminescence screen for the purpose of observing the emission picture also in lamps with a pure metallic anode. The pressure in the measurements was of the order of 10^{-10} torr. A specially constructed impulse generator was used, which maintained the voltage on the pulse-height plateau (1-2 μsec) constant with an accuracy of 0.1%. A two-ray oscilloscope was used for pulse-recording. Some ten characteristics were recorded; one of them is shown in Fig. 3. Fig. 4 contains a number of oscillograms showing points A - E of the current-voltage characteristic. Fig. 5 shows a dark photograph of the emitter in the electron microscope (1:10^7). A qualitative comparison between the experimental results and the electrostatic electron emission equations is carried out, a) for the case of a square barrier, b) under the assumption of a barrier rounded off by the forces of the electric image, and c) corresponding to the many-electron problem with the

Card 2/3

APPROVED FOR RELEASE: 09/19/2001 CIA-RDP86-00513R001343320018-6"

"APPROVED FOR RELEASE: 09/19/2001 CIA-RDP86-00513R001343320018-6

81655

Investigation of the Electrostatic Electron Emission From a Tungsten Emitter in Pulsed Operating Conditions

S/181/60/002/06/45/050
B006/B056

correction according to A. S. Kompaneyets. It is shown that for a spherically distributed space charge, the course of the experimental current-voltage characteristics always corresponds to case c). There are 6 figures and 9 references: 5 Soviet and 4 American.

ASSOCIATION: Sredneaziatskiy gosudarstvennyy universitet Tashkent (Central Asia State University Tashkent)

SUBMITTED: September 17, 1959

Card 3/3

APPROVED FOR RELEASE: 09/19/2001 CIA-RDP86-00513R001343320018-6"

"APPROVED FOR RELEASE: 09/19/2001 CIA-RDP86-00513R001343320018-6

L 18330-65 EWT(m)/EWP(t)/EWP(b) IJP(c)/ASD(a)-5/AS(mp)-2/ESD(t) JD
ACCESSION NR: AP5000469 S/0166/64/000/004/0062/0072

AUTHOR: Protopopov, O. D.

TITLE: Field emission from silicon

SOURCE: AN UzSSR. Izvestiya. Seriya fiziko-matematicheskikh nauk, no. 4, 1964, 62-72

TOPIC TAGS: emission, electron emission, electrostatic emission, electrostatic electron emission, silicon emitter, silicon emission pattern

ABSTRACT: The electrostatic emission patterns of silicon needle cathodes were obtained by the field desorption method (Cooper, E. C., Muller, E. W., Re. Sci. Instr. 29, 1958, 309), which makes it possible to discount the effect of boron contaminants adsorbed from glass containers. The cathode was made in the form of a needle integral with a 1 x 4.8 x 15 mm plate. The vacuum in the chamber was brought down to 10^{-10} mm Hg. The cathode was heated intermittently prior to measurements to temperatures of 950—1350K. The field desorption was then applied and the change of the emission pattern observed during

Card 1/3

APPROVED FOR RELEASE: 09/19/2001 CIA-RDP86-00513R001343320018-6"

"APPROVED FOR RELEASE: 09/19/2001 CIA-RDP86-00513R001343320018-6

L 18330-65
ACCESSION NR: AP5000469

the desorption process. A temperature of about 1350K is considered necessary for effective degassing before desorption. The vacuum should be considerably below the 10^{-8} mm Hg level. The reverse potential necessary to start the desorption was found to be about 5 times higher than that needed to obtain an emission of the order of 10^{-7} amp. The voltage-current characteristics for variously oriented n- and p-type single crystals with specific resistivities of 0.05 to 72 ohm-cm were plotted and the dependence found to be linear within the current range from 5×10^{-11} to 1×10^{-5} amp. Pulse measurements up to 7×10^{-2} amp resulted in a departure from linearity toward the higher currents. The pulsed current exceeded the stationary value at the same voltage by at least an order of magnitude. None of the voltage-current graphs obtained in the experiments displayed the expected "bend" due to the penetration of the field into the region of the "typical" semiconductor. On the contrary, the curves tended to bend in the opposite direction. This phenomenon is explained tentatively by the nonequilibrium condition of the emission at given field strengths. In general, the relationship should become linear in the case of strong surface degeneration. If it is assumed that degeneration does not occur, the current rise most probably results from overheating of the electron gas. Orig.

Card 2/3

APPROVED FOR RELEASE: 09/19/2001 CIA-RDP86-00513R001343320018-6"

"APPROVED FOR RELEASE: 09/19/2001 CIA-RDP86-00513R001343320018-6

L 18330-65
ACCESSION NR: AP5000469

art. has: 5 figures.

ASSOCIATION: Tashkentskiy gosuniversitet im. V. I. Lenina (Tashkent State University)

SUBMITTED: 02Oct63 ENCL: 00 SUB CODE: SS,EM

NO REF SOV: 009 OTHER: 016 ATD PRESS: 3155

Card 3/3

APPROVED FOR RELEASE: 09/19/2001 CIA-RDP86-00513R001343320018-6"

"APPROVED FOR RELEASE: 09/19/2001 CIA-RDP86-00513R001343320018-6

SOGRISHIN, Yu.P.; PROTOPOPOV, O.V.

Equipment for high speed die stamping [from foreign publications]. Kuz.-shtam.proizv. 4 no.2:25-27 F '62. (MIRA 15:2)
(Sheet metal working machinery)

APPROVED FOR RELEASE: 09/19/2001 CIA-RDP86-00513R001343320018-6"

"APPROVED FOR RELEASE: 09/19/2001 CIA-RDP86-00513R001343320018-6

KROKHA, V.A.; PROTOPOPOV, O.V.; BAKHOVKIN, A.M.

Analysis of the technological and economic indices of gear wheel forging with finishing of the gears. Kuz.-shtam.proizv. 5 no.7: 31-35 Jl '63. (MIRA 16:9)

APPROVED FOR RELEASE: 09/19/2001 CIA-RDP86-00513R001343320018-6"

"APPROVED FOR RELEASE: 09/19/2001 CIA-RDP86-00513R001343320018-6

S/182/63/000/002/001/007
A004/A126

AUTHORS: Rebel'skiy, A. V. (Deceased), Protopopov, O. V., Sogrishin, Yu. P., Lyubimov, I. M.

TITLE: Selecting the parameters of crank presses for die pressing

PERIODICAL: Kuznechno-shtampovochnoye proizvodstvo, no. 2, 1963, 1 - 7

TEXT: The authors point out that, since the existing press designs used in die pressing show a number of deficiencies, plants and institutes in the Soviet Union and abroad have been trying for some years to design die-forging presses particularly adapted to die pressing. In this connection they mention press designs developed by Messrs. Massey and an automatic 1,000 ton press designed and built by the Voronesh TMP Plant according to orders of the Kuybyshev "Avtotraktorodetal'" Plant. The TsBKM provided for the development of a range of crank presses of from 400 to 4,000 tons capacity, while the ENIKMASh together with MAMI suggested the basic parameters of these presses in 1961. Engineers S. A. Ryaskov and Yu. I. Lubyanskiy participated in this work. To determine the main press parameters, a great number of components were studied that are pro-

Card 1/2

APPROVED FOR RELEASE: 09/19/2001 CIA-RDP86-00513R001343320018-6"

"APPROVED FOR RELEASE: 09/19/2001 CIA-RDP86-00513R001343320018-6

duced by plants of the automotive, agricultural machine-building, machine-tool, shipbuilding and aircraft industries, of which some 100 types and sizes were chosen that could be expediently produced by die pressing. It was found that the number of transitions, depending on the configuration and size of the forgings, very often does not exceed three (upsetting, pressing and final die pressing). The authors give a detailed description of the rating of the main press parameters suggested, present appropriate formulae, graphs and tables, and point out that these parameters have been approved by a number of plants. There are 5 figures and 3 tables.

APPROVED FOR RELEASE: 09/19/2001 CIA-RDP86-00513R001343320018-6"

"APPROVED FOR RELEASE: 09/19/2001 CIA-RDP86-00513R001343320018-6

S/182/62/000/012/001/005
D040/D112

AUTHORS: Rebel'skiy, A.V. (Deceased), Protopopov, O.V., Kuznetsov, A.V., Polyakov, I.S., and Rybakov, Yu.I.

TITLE: Press forging in sectional dies

PERIODICAL: Kuznechno-shtampovochnoye proizvodstvo, no.12, 1962, 3-8

TEXT: ENIKMASh and the Moskovskiy avtomekhanicheskiy institut (Moscow Automechanical Institute) jointly studied the sectional-die forging process by forging two types of automotive universal joints. The universal joint was chosen because it is a typical automobile part with long protrusions that can be economically fabricated by the sectional-die forging method. The article gives a detailed description of the two experimental dies sets, observations of metal flow in the die and the transition radii, gaps between the punch and the die container, and the forging outline giving proper filling of the die without burrs. Engineering recommendations are given. Studies have yet to be continued to find the necessary technological data for the forging of parts other than universal joints. The recommendations concern the outline of the forging, the use of one-stage and two-stage forging for different forgings, the types of special presses to be developed. Reference

Card 1/2

APPROVED FOR RELEASE: 09/19/2001 CIA-RDP86-00513R001343320018-6"

"APPROVED FOR RELEASE: 09/19/2001 CIA-RDP86-00513R001343320018-6

Press forging in sectional dies

S/182/62/000/012/001/005
D040/D112

is made to non-Soviet special presses for sectional-die forging, such as the U.S. Baldwin press, the German "Siempelkamp", or the British Wilkins & Mitchell. There are 8 figures and 1 table.

Card 2/2

APPROVED FOR RELEASE: 09/19/2001 CIA-RDP86-00513R001343320018-6"

"APPROVED FOR RELEASE: 09/19/2001 CIA-RDP86-00513R001343320018-6

REBEL'SKIY, A.V. [deceased]; PROTOPOPOV, O.V.; SOGRISHIN, Yu.P.; LYUBIMOV, I.M.

Selecting mechanical press parameters for press forging. Kuz.-shtam.proizv. 5 no.2:1-7 F '63. (MIRA 16:2)
(Power presses)

APPROVED FOR RELEASE: 09/19/2001 CIA-RDP86-00513R001343320018-6"

"APPROVED FOR RELEASE: 09/19/2001 CIA-RDP86-00513R001343320018-6

PROTOPOPOV, O.V., kand. tekhn. nauk; SOGRISHIN, Yu.P., kand. tekhn. nauk

Forging of bevel gear wheels. [Nauch. trudy] ENIKMASha 7:70-89 '63. (MIRA 16:7)

(Gearing) (Forging)

APPROVED FOR RELEASE: 09/19/2001 CIA-RDP86-00513R001343320018-6"

"APPROVED FOR RELEASE: 09/19/2001 CIA-RDP86-00513R001343320018-6

PROTOPOPOV, O.V.; SOGRISHIN, Yu.P.

Progressive method of manufacturing gear wheels. [Nauch. trudy] ENIKMASha 7:21-34 '63. (MIRA 16:7)

(Gearing) (Forging)

APPROVED FOR RELEASE: 09/19/2001 CIA-RDP86-00513R001343320018-6"

"APPROVED FOR RELEASE: 09/19/2001 CIA-RDP86-00513R001343320018-6

REBEL'SKIY, A.V. [deceased]; PROTOPOPOV, O.V.; KUZNETSOV, A.V.; POLYAKOV, I.S.; RYBAKOV, Yu.I.

Drop forging in split dies. Kuz.-shtam.proizv. 4 no.12:3-8 D '62. (MIRA 16:1)

(Forging) (Dies (Metalworking))

APPROVED FOR RELEASE: 09/19/2001 CIA-RDP86-00513R001343320018-6"

"APPROVED FOR RELEASE: 09/19/2001 CIA-RDP86-00513R001343320018-6

PROTOPOPOV, [illegible].V., C[illegible] Tech Sci—(diss) "[illegible] of the forging of tubular steel ~~ingots~~ billets on horizontal-forging machines." [illegible], 195[illegible]. 21 pp with drawings (Min of Higher Education. [illegible]). 120 copies (KL, [illegible]-58, 1[illegible])

-94

APPROVED FOR RELEASE: 09/19/2001 CIA-RDP86-00513R001343320018-6"

"APPROVED FOR RELEASE: 09/19/2001 CIA-RDP86-00513R001343320018-6

PROTOPOPOV, O.V.

25(1) PHASE I BOOK EXPLOITATION SOV/3368

Moscow. Avtomekhanicheskiy institut. Kafedra "Mashiny i tekhnologiya obrabotki metallov davleniyem"

Protsessy shtampovki i ikh tekhnologicheskiye parametry (Pressure-working Processes and Their Technological Characteristics) Moscow, Mashgiz, 1959. 198 p. Errata slip inserted. 3,650 copies printed.

Sponsoring Agency: Ministerstvo vysshego obrazovaniya SSSR.

Ed.: I. A. Moritsyn, Doctor of Technical Sciences, Professor; Ed. of Publishing House: G.N. Soboleva; Tech. Ed.: V.D. El'kind; Managing Ed. for Literature on Heavy Machine Building (Mashgiz): S. Ya. Golovin, Engineer.

PURPOSE: The book is intended for engineering and scientific personnel of plant laboratories, stamping and forging shops. It can also be used by students.

COVERAGE: The authors of the eight articles in this collection analyze speed and power coefficients, discuss methods of pressing, rates of deformation, and other problems in pressing and forging. The articles are based on research conducted by the Department of Machines and Technology of Metal Forming of the Moskovskiy avtomekhanicheskiy institut (Moscow Automation and Mechanization Institute). References appear at the end of each article.

Protopopov, O. V., Engineer. Investigation into the Practice of Upsetting Pipe Stock. 155

The article is divided into three sections: problem of stress, problem of stability, and experimental results. The article analyzes the process of deformation of stock in the press and derives formulas for press force.

Orlov, P. K., Candidate of Technical Sciences. Experimental Investigation of the Formation of Flow Lines in Cold Stamped and Drawn Body Sections of Automobiles 169

The article covers the surface layer of sheets, formation of flow lines as a result of elongation stress, flow lines in deep drawing, and flow lines in cold-worked parts.

Palyakov, I. S., Engineer. Aspects of Rapid Heating of Forging Blanks 183

The author discusses and evaluates five methods of heating: rapid heating in a flame furnace, induction heating, arc-furnace heating, heating in an electrolyte, and heating in molten glass. No definite conclusions as to economic advantages of any of these methods are drawn.

AVAILABLE: Library of Congress

APPROVED FOR RELEASE: 09/19/2001 CIA-RDP86-00513R001343320018-6"

"APPROVED FOR RELEASE: 09/19/2001 CIA-RDP86-00513R001343320018-6

SOV/137-59-3-6881

Translation from: Referativnyy zhurnal. Metallurgiya, 1959, Nr 3, p 281 USSR)

AUTHOR: Protopopov, O. V.

TITLE: The Development of the Technology of Upsetting of Pipes on Horizontal Forging Presses (Razrabotka tekhnologii vysadki trub na gorizontal'nokovochnykh mashinakh)

PERIODICAL: Tekhnol. avtomobilestroyeniya, 1958, Nr 4, pp 23-35

ABSTRACT: The author derives formulas for the determination of the stresses of upsetting (U) of pipes by analyzing force systems operating during U of pipe blanks (B) at an instant when the entire hollow of the die (in which the metal is deformed in such a manner that the outer diameter is increased and the inner diameter is reduced) is filled with metal. A computation of the number and degree of intensity of successive U steps is presented on the basis of a study of the ability of tubular rods to resist buckling while in a plastic state. The results of the theoretical investigation were compared with shop and experimental data. During operations of U of pipes in a horizontal forging press in which the external diameter (D) of the pipe is kept constant, the degree of thickening of the wall is not limited by its buckling behavior

Card 1/2

APPROVED FOR RELEASE: 09/19/2001 CIA-RDP86-00513R001343320018-6"

"APPROVED FOR RELEASE: 09/19/2001 CIA-RDP86-00513R001343320018-6

SOV/137-59-3-6881

The Development of the Technology of Upsetting of Pipes (cont.)

but rather by the rigidity of the clamping mechanisms and by the length of the portion being deformed. Over a wide range of lengths (up to $\ell_0 = 3D_0$) the thickness of the wall may be increased by 1.25 times by increasing the outer D without altering the inner D. An increase of 1.5 times is possible only in the case of short specimens ($\ell_0 < 0.5\ D_0$). The correctness of the formula derived for the determination of stresses at the instant when the entire hollow of the die is filled with metal is corroborated by oscillograms of the force conditions prevailing during operations of U of pipes involving an increase in the outer D of the original B's. Theoretical and experimental data were employed in plotting the permissible increase in wall thickness as a function of ℓ_0/D_0 for the case of U of B's under the following conditions: Constant outer D; constant inner D, and a combination of these two cases. The order of computing the number and the degree of intensity of successive steps in U of hollow forgings of tubular B's is presented and an example illustrating the computation is examined.

M. Ts.

Card 2/2

APPROVED FOR RELEASE: 09/19/2001 CIA-RDP86-00513R001343320018-6"

"APPROVED FOR RELEASE: 09/19/2001 CIA-RDP86-00513R001343320018-6

EWT(1)
ACC NR: AT6020366 SOURCE CODE: UR/3209/66/000/001/0059/0065

AUTHOR: Rublev, Yu. V. (Candidate of physico-mathematical sciences); Protopopov, R. V. (Physicist, Candidate of technical sciences)

ORG: none

TITLE: The use of a photoelastic method for studying variable pressures

SOURCE: Ukraine. Ministerstvo vysshego i srednego spetsial'nogo obrazovaniya. Mezhvedomstvennyy respublikanskiy nauchno-tekhnicheskiy sbornik, 1966. Akustika i ul'trazvuk (Acoustics and ultrasonics), no. 1, 59-65

TOPIC TAGS: photoelasticity, pressure measurement, ultrasonic vibration, electric field, electromagnetic wave dispersion, stress analysis

ABSTRACT: Analytical and experimental photoelastic techniques for studying variable pressures induced by ultrasonic oscillations are described. A plane-parallel photoelastic element having monochromatic light passing through its face was analyzed under static and dynamic stress applications. Equations are given for oscillating electric fields and static loading and a polarization ellipse is constructed. These equations are applied to the case of variable loading for which the amplitude of oscillation is given by

$$S = E_0^2 \sin^2 2\alpha \sin^2\left(\frac{\pi}{\lambda} \varkappa l P_0 \sin \Omega t\right).$$

Card 1/2

APPROVED FOR RELEASE: 09/19/2001 CIA-RDP86-00513R001343320018-6"

"APPROVED FOR RELEASE: 09/19/2001 CIA-RDP86-00513R001343320018-6

L 08888-67

ACC NR: AT6026366

where $P = P_0 \sin \Omega t$ is the variable pressure, λ is the monochromatic wavelength, α is the angle between the polarization plane and the direction perpendicular to the face, l is the thickness of the photoelastic material, $\varkappa$ is a material constant, and E_0 is the maximum amplitude of the electric wave. This equation applies only to the case where

$$\frac{\pi}{\lambda}\varkappa l P_0 < 1{,}58,$$

since, in this case the maximum pressure corresponds to the maximum intensity. For glass, this condition is almost always fulfilled. The maximum sensitivity occurs when $\alpha = \pi/4$:

$$S = E_0^2 \sin^2\left(\frac{\pi}{\lambda}\varkappa l P_0 \sin \Omega t\right).$$

An experimental arrangement used for obtaining calibration curves is shown. In these curves, the oscillograph voltage is given as a function of ultrasonic pressure for a photoelastic glass of 2 mm thickness and 32 mm width. The average pickup sensitivity at a given frequency depended on the alternating pressure: at a frequency of 20 kilocycles/sec, it was 10^{-6} mv/bar. Orig. art. has: 4 figures, 18 formulas.

SUB CODE: 20,13/ SUBM DATE: none

Card 2/2

APPROVED FOR RELEASE: 09/19/2001 CIA-RDP86-00513R001343320018-6"

"APPROVED FOR RELEASE: 09/19/2001 CIA-RDP86-00513R001343320018-6

KORTNEV, A.V.; PROTOPOPOV, R.V.; RUBLEV, Yu.V.

Method for studying the absorbing capacity of wave guide transducers designated for acoustic intensity measurements. Nauch. zap. Od. politekh. inst. 41:27-30 '62. (MIRA 17:4)

APPROVED FOR RELEASE: 09/19/2001 CIA-RDP86-00513R001343320018-6"

"APPROVED FOR RELEASE: 09/19/2001 CIA-RDP86-00513R001343320018-6

S/194/62/000/012/058/101
D295/D308

AUTHORS: Kortnev, A. V., Gardymova, Z. N., Protopopov, R. V. and Rublev, Yu. V.

TITLE: Calibration of thermoelectric meters of ultrasonic intensity

PERIODICAL: Referativnyy zhurnal, Avtomatika i radioelektronika, no. 12, 1962, 12, abstract 12-5-23 e (Nauchn. zap. Odessk. politekhn. in-t, v. 37, 1962, 54-59)

TEXT: The problem of the calibration of thermoacoustic pickups is considered. The authors suggest that the intensity distribution be determined in relative units at a certain distance from the transducer by means of a coordinate-type apparatus, using the topographical-survey method. The obtained energy values should be added together and equated to the energy measured by some absolute method, e.g. by a calorimeter. The proportionality factor will then be the sensitivity of the temperature detector. Data are given on the method of calibrating pickups in the form of differential thermocouples

Card 1/2

APPROVED FOR RELEASE: 09/19/2001 CIA-RDP86-00513R001343320018-6"

"APPROVED FOR RELEASE: 09/19/2001 CIA-RDP86-00513R001343320018-6

Calibration of thermoelectric ... S/194/62/000/012/058/101
D295/D308

with the hot layer covered by БФ-2 (BF-2) resin glue. [Abstracter's note: Complete translation.]

Card 2/2

APPROVED FOR RELEASE: 09/19/2001 CIA-RDP86-00513R001343320018-6"

"APPROVED FOR RELEASE: 09/19/2001 CIA-RDP86-00513R001343320018-6

24.1800

S/194/62/000/012/059/101
D295/D308

AUTHORS: Rublev, Yu. V., Protopopov, R. V. and Kortnev, A. V.

TITLE: Interference-type ultrasonic energy absorber

PERIODICAL: Referativnyy zhurnal, Avtomatika i radioelektronika, no. 12, 1962, 12, abstract 12-5-24 d (Nauchn. zap. Odessk. politekhn. in-t, v. 37, 1962, 9-16)

TEXT: The problem of two-layer absorber intended for wide-band measuring probes is considered theoretically. Formulas are obtained that make it possible to select both the materials and thickness of the intermediate layer for an interference-type absorber permitting a travelling wave to be set up in the waveguide. An example is given of calculations for an absorber for a nickel waveguide where glycerine is used as the intermediate layer. It is pointed out that in this case best results are obtained with cork and plaster. [Abstracter's note: Complete translation.]

Card 1/1

APPROVED FOR RELEASE: 09/19/2001 CIA-RDP86-00513R001343320018-6"

"APPROVED FOR RELEASE: 09/19/2001 CIA-RDP86-00513R001343320018-6

40999

S/058/62/000/009/013/069
A006/A101

24,1800

AUTHORS: Rublev, Yu. V., Protopopov, R. V., Kortnev, A. V.

TITLE: Interference ultrasonic energy absorber

PERIODICAL: Referativnyy zhurnal, Fizika, no. 9, 1962, 36, abstract 9Ø266 ("Nauchn. zap. Odessk. politekhn. in-t", 1962, v. 37, 9 - 16)

TEXT: For the purpose of eliminating undesirable reflected waves in a waveguide during the production of a wide band probe, the use of an interference absorber is proposed. A theoretical analysis is made of the problem of wave damping for the case of superposition of a direct wave and a series of reflected waves in a two-layer absorber design. For some particular cases the optimum thickness of the layer between the waveguide and the absorbing material is calculated and the latter is selected. The calculations show that for the case when nickel is used for the waveguide and glycerin as intermediate medium, cork and gypsum are the most suitable materials to obtain an operational band up to 100 kilocycles.

Yu. Borisov

[Abstracter's note: Complete translation]

Card 1/1

APPROVED FOR RELEASE: 09/19/2001 CIA-RDP86-00513R001343320018-6"

"APPROVED FOR RELEASE: 09/19/2001 CIA-RDP86-00513R001343320018-6

PROTOPOPOV, S.

How to make use of reports in analyzing unfinished construction and putting into operation industrial units. Fin. SSSR 23 no.7:82-86 Jl '62. (MIRA 15:7)
(Construction industry--Accounting) (Banks and banking)

APPROVED FOR RELEASE: 09/19/2001 CIA-RDP86-00513R001343320018-6"

"APPROVED FOR RELEASE: 09/19/2001 CIA-RDP86-00513R001343320018-6

PROTOPOPOV, S.

Advice to the cook. Obshchest.pit. no.3:16-18 Mr '62. (MIRA 15:4)

1. Glavnyy kulinar Glavnogo upravleniya obshchestvennogo pitaniya Ispolnitel'nogo komiteta Moskovskogo gorodskogo soveta deputatov trudyashchikhsya.

(Cookery)

APPROVED FOR RELEASE: 09/19/2001 CIA-RDP86-00513R001343320018-6"

"APPROVED FOR RELEASE: 09/19/2001 CIA-RDP86-00513R001343320018-6

PROKOPOPOV, S., master-povar

With Rumanian friends. Obshchestv. pit. no. 8:55-56 Ag '58. (MIRA 11:3)

1. Zaveduyushchiy proizvodstvom Moskovskoy stolovoy No. 574.
(Rumania--Restaurants, lunchrooms, etc.)

APPROVED FOR RELEASE: 09/19/2001 CIA-RDP86-00513R001343320018-6"

"APPROVED FOR RELEASE: 09/19/2001 CIA-RDP86-00513R001343320018-6

DZHAPPUYEV, M.; PROTOPOPOV, S.; LITOVSKIY, V., master-povar; FEKINA, L., inzhener-kulinar (Lermontov, Stavropol'skogo kraya); YERMOLAYEV, V.

Advice to the cook. Obshchestv.pit. no.1:22-23 Ja '63. (MIRA 16:4)

1. Nachal'nik otdela obshchestvennogo pitaniya Nal'chikskoy kontory "Kurortprodtorga", Nal'chik (for Dzhappuyev). 2. Glavnyy kulinar Glavnogo upravleniya obshchestvennogo pitaniya Moskovskogo gorodskogo ispolnitel'nogo komiteta Moskovskogo gorodskogo soveta deputatov trudyashchikhsya (for Protopopov). 3. Zaveduyushchiy proizvodstvom stolovoy No.14 Novomoskovskogo tresta stolovykh Novomoskovsk, Tul'skoy oblasti (for Litovskiy). 4. Zamestitel' zaveduyushchego proizvodstva restorana "Varshava", Moskva (for Yermolayev).
(Cookery)

APPROVED FOR RELEASE: 09/19/2001 CIA-RDP86-00513R001343320018-6"

"APPROVED FOR RELEASE: 09/19/2001 CIA-RDP86-00513R001343320018-6

MALYSHEV, S.; PROTOPOPOV, S.

A stable transistor amplifier. Radio no.3:28-29 Mr'64 (MIRA 17:7)

APPROVED FOR RELEASE: 09/19/2001 CIA-RDP86-00513R001343320018-6"

"APPROVED FOR RELEASE: 09/19/2001 CIA-RDP86-00513R001343320018-6

PROTOPOPOV, S.

Analysis of the fulfillment of the capital construction plan. (MLRA 8:2)
Fin. SSSR 15 no.11:70-79 N'54.
(Construction industry--Finance)

APPROVED FOR RELEASE: 09/19/2001 CIA-RDP86-00513R001343320018-6"

"APPROVED FOR RELEASE: 09/19/2001 CIA-RDP86-00513R001343320018-6

SIDOROV, Vasiliy Alekseyevich; GRIGOR'YEV, P.Ya., red.; KAGANOVA, A.A., red.; LOBANOV, D.I., red.; MANELIS, A.Ya., red.; PROTOPOPOV, S.I., red.; TROFIMOVA, V.I.; KAGANOVA, A.A., red.; MEDRISH, D.M., tekhn. red.

[Preliminary processing and preparation of food] Pervichnaia obrabotka i zagotovka produktov vprok. Moskva, Gos. izd-vo torg. lit-ry, 1960. 119 p. (MIRA 14:10)

(Cookery)

APPROVED FOR RELEASE: 09/19/2001 CIA-RDP86-00513R001343320018-6"

"APPROVED FOR RELEASE: 09/19/2001 CIA-RDP86-00513R001343320018-6

PROTOPOPOV, S.N.

[Accounting in contractual construction enterprises] Bukhgalterskii uchet v podriadakh stroitel'nykh organizatsiiakh. Moskva, Gos. izd-vo lit-ry po stroitel'stvu i arkhitekture, 1953. 398 p. (MIRA 10:11)
(Construction industry--Accounting)

APPROVED FOR RELEASE: 09/19/2001 CIA-RDP86-00513R001343320018-6"

"APPROVED FOR RELEASE: 09/19/2001 CIA-RDP86-00513R001343320018-6

PROTOPOPOV, S., master-povar; NEPOROZHNEV, V., master-povar

Advice to the cook. Obshchestv.pit. no.8:15-16 Ag '62. (MIRA 16:10)

1. Glavnyy kulinar Upravleniya obshchestvennogo pitaniya Moskovskogo gorodskogo ispolnitel'nogo komiteta (for Protopopov).
2. Zaveduyushchiy proizvodstvom stolovoy No.32 tresta stolovykh Oktyabr'skogo rayona Moskvy (for Neporozhnev).

APPROVED FOR RELEASE: 09/19/2001 CIA-RDP86-00513R001343320018-6"

"APPROVED FOR RELEASE: 09/19/2001 CIA-RDP86-00513R001343320018-6

PROTOPOPOV, S.

Strengthening business accounting in constructions. Fin.SSSR 16 no.11:25-32 N '55. (MLRA 9:1)
(Construction industry--Finance)

APPROVED FOR RELEASE: 09/19/2001 CIA-RDP86-00513R001343320018-6"

"APPROVED FOR RELEASE: 09/19/2001 CIA-RDP86-00513R001343320018-6

PROTOPOPOV, S.

Analysis of labor productivity and wages in the construction industry. Fin.SSSR 20 no.12:70-78 D '59. (MIRA 12:12)
(Construction industry--Labor productivity)
(Wages)

APPROVED FOR RELEASE: 09/19/2001 CIA-RDP86-00513R001343320018-6"

"APPROVED FOR RELEASE: 09/19/2001 CIA-RDP86-00513R001343320018-6

PROTOPOPOV, S.

Analyzing the work of planning organizations. Fin. SSSR 21 no.12:73-78 D '60. (MIRA 13:12)
(Architecture--Designs and plans)
(Construction industry--Finance)

APPROVED FOR RELEASE: 09/19/2001 CIA-RDP86-00513R001343320018-6"

"APPROVED FOR RELEASE: 09/19/2001 CIA-RDP86-00513R001343320018-6

15G27

PROTOPOPOV, S.

USSR/Govt Economic Measures 4102. Jan 1947

"Economic Reserves in Capital Construction," S. Protopopov, 4½ pp

"Sov Finansy" Vol VIII, No 1

Analysis of construction work being carried on by various ministries and comparison of construction costs. Analysis of factors which contribute to high costs of construction. One criticism relates to starting too many projects at same time and not completing them so that they can be put into use, e.g., the Boksitstroy enterprise is working on 147 objectives at the same time. Plan for capital work for first half of 1946 was fulfilled by 98.6% but plan for putting projects into operation has only been 38.1% completed. LC

15G27

APPROVED FOR RELEASE: 09/19/2001 CIA-RDP86-00513R001343320018-6"

"APPROVED FOR RELEASE: 09/19/2001 CIA-RDP86-00513R001343320018-6

PROTO-OPOV, S.

USSR (600)

Construction Industry - Accounting

Most recent developments in the organization of initial accounting at construction sites, Bukhg. uchet, 11, No 6, 1952.

Monthly List of Russian Accessions, Library of Congress, October 1952. UNCLASSIFIED.

APPROVED FOR RELEASE: 09/19/2001 CIA-RDP86-00513R001343320018-6"

"APPROVED FOR RELEASE: 09/19/2001 CIA-RDP86-00513R001343320018-6

PROTOPOPOV, S. I.

GRIGOR'YEV, Petr Yakovlevich; KAGANOVA, A.A., redaktor; LOBANOV, D.I., redaktor; MARELIS, A.Ya., redaktor; PROTOPOPOV, S.I., redaktor; SIDOROV, V.A., redaktor; TROFIMOVA, V.I., redaktor; [illegible], D.M., tekhnicheskiy redaktor

[Cold dishes and snacks] Kholodnye blyuda i zakuski. Moskva, Gos. izd-vo torg.lit-ry, 1957. 162 p. (MLRA 10:10)
(Cookery)

APPROVED FOR RELEASE: 09/19/2001 CIA-RDP86-00513R001343320018-6"

"APPROVED FOR RELEASE: 09/19/2001 CIA-RDP86-00513R001343320018-6

PROTOPOPOV, S., master-povar

Cookery of early vegetables. Obshchestv. pit. no.6:21-22 Je. '63. (MIRA 16:12)

1. Glavnyy kulinar Glavnogo upravleniya obshchestvennogo pitaniya Ispolnitel'nogo komiteta Moskovskogo gorodskogo soveta deputatov trudyashchikhsya.

APPROVED FOR RELEASE: 09/19/2001 CIA-RDP86-00513R001343320018-6"

"APPROVED FOR RELEASE: 09/19/2001 CIA-RDP86-00513R001343320018-6

PROTOPOPOV, S., master-povar

What does the taste of soup depend on? Obshchestv.pit. no.7:7-8 Jl '60. (MIRA 13:8)

(Soups)

APPROVED FOR RELEASE: 09/19/2001 CIA-RDP86-00513R001343320018-6"

"APPROVED FOR RELEASE: 09/19/2001 CIA-RDP86-00513R001343320018-6

MARTYNENKO, I.A.; PROTOPOPOV, S.F.

New developments in working twin long walls. Ugol' 40 no.9:18-20 S '65.

(MIRA 18:10)

1. Glavnyy inzh. tresta Novovolynskugol' (for Martynenko).
2. Zamestitel' glavnogo inzhenera shakhty No.5 "Novovolynskaya" (for Protopopov).

APPROVED FOR RELEASE: 09/19/2001 CIA-RDP86-00513R001343320018-6"

"APPROVED FOR RELEASE: 09/19/2001 CIA-RDP86-00513R001343320018-6

BORISENKO, Sergey Grigor'yevich; TARASOV, Leonid Yakovlevich; KOVALEV, Igor' Antoninovich; PROTOPOPOV, Sergey Filippovich; DZHIMSHELEYSHVILI, Sh.P., otv. red.; YEROKHIN, G.M., red. izd-va; OVSEYENKO, V.G., tekhn.red.

[Raise work]Prokhodka vosstaiushchikh. Moskva, Gosgortekhizdat, 1962. 271 p. (MIRA 15:11)
(Mining engineering)

APPROVED FOR RELEASE: 09/19/2001 CIA-RDP86-00513R001343320018-6"

"APPROVED FOR RELEASE: 09/19/2001 CIA-RDP86-00513R001343320018-6

SIDOROV, Vasiliy Alekseyevich; GRIGOR'YEV, P.Ya., red.; KAGANOVA, A.A., red.; LOBANOV, D.I., red.; MANELIS, A.Ya., red.; PROTOPOPOV, S.I., red.; TROFIMOVA, V.I., red.; MEDRISH, D.M., tekhn. red.

[Initial processing of foods] Pervichnaia obrabotka i zagotovka produktov vprok. Moskva, Gos. izd-vo torg. lit-ry, 1958. 150 p. (Food) (MIRA 11:9)

APPROVED FOR RELEASE: 09/19/2001 CIA-RDP86-00513R001343320018-6"

"APPROVED FOR RELEASE: 09/19/2001 CIA-RDP86-00513R001343320018-6

GROZNOV, Sergey Romanovich; NIKASHIN, Filipp Petrovich; GRIGOR'YEV, P.Ya., red.; KAGANOVA, A.A., red.; LOBANOV, D.I., red.; MANELIS, A.Ya., red.; PROTOPOPOV, S.I., red.; SIDOROV, V.A., red.; TROFIMOVA, V.I., red.; MEDRISH, D.M., tekhn.red.

[Meat dishes] Miasnye bliuda. Moskva, Gos.izd-vo torg.lit-ry, 1960. 222 p. (MIRA 13:11)

(Cookery (Meat))

APPROVED FOR RELEASE: 09/19/2001 CIA-RDP86-00513R001343320018-6"

"APPROVED FOR RELEASE: 09/19/2001 CIA-RDP86-00513R001343320018-6

ABATUROV, P.V.; GROZNOV, S.R.; GANETSKIY, I.D.; KOZYREVA, Ye.A.; NOVITSKAYA, L.A.; ODINTSOV, A.I.; PROTOPOPOV, S.I.; SIDOROV, V.A.; SIDOROVA, L.I.; TROFIMOVA, V.I.; TRUSHINA, I.V.; SHTEYMAN, R.A.; DUNTSOVA, K.G., red.; KAZENOVA, A.P., red.; MARSHAK, M.S., prof., red.; MOLCHANOVA, O.P., prof., red.; SALOMATINA, K.Z., red.; KAGANOVA, A.A., redl; MEDRISH, D.M., tekhn. red.

[Dietetic cookery in eating establishments]Dieticheskoe pitanie v stolovykh; sbornik retseptur i tekhnologiia prigotovleniia bliud. Moskva, Gos.izd-vo torg.lit-ry, 1962. 262 p. (MIRA 16:1)

1. Russia (1917- R.S.F.S.R.)Ministerstvo torgovli.
(COOKERY FOR THE SICK)

APPROVED FOR RELEASE: 09/19/2001 CIA-RDP86-00513R001343320018-6"

"APPROVED FOR RELEASE: 09/19/2001 CIA-RDP86-00513R001343320018-6

TROFIMOVA, V.I., nauchnyy sotr.; SHTEYMAN, R.A., nauchnyy sotr.; GROZNOV, S.R., nauchnyy sotr.; SIDOROVA, L.I., nauchnyy sotr.; DUNTSOVA, V.G.; KAZENOVA, A.R.; PROTOPOPOV, S.I.; SHORIN, G.F., red.; LOBANOV, D.I., red.; MOLCHANOV, O.P., red.; MARTYNOVA, Ye.G., red.; SIDOROV, V.A., red.; TIMATKOV, V.D., red.; VAGANOVA, N.A., red.; BABIGEVA, V.V., tekhn. red.

[Collected recipes of dishes for workers and students] Sbornik retseptur bliud dlia pitaniia rabochikh i studentov. 2. perer. dop. izd. Moskva, Gos.izd-vo torg.lit-ry, 1961. 491 p. (MIRA 15:1)

1. Russia (1917- R.S.F.S.R.) Ministerstvo torgovli. 2. Nauchno-issledovatel'skiy institut torgovli i obshchestvennogo pitaniya (for Trofimova, Shteyman, Groznov, Sidorova). 3. Upravleniye obshchestvennogo pitaniya Ministerstva torgovli RSFSR (for Duntsova, Kazenova). 4. Glavnyy kulinar Upravleniya obshchestvennogo pitaniya Ministerstva torgovli RSFSR (for Protopopov).
(Cookery)

APPROVED FOR RELEASE: 09/19/2001 CIA-RDP86-00513R001343320018-6"

"APPROVED FOR RELEASE: 09/19/2001 CIA-RDP86-00513R001343320018-6

KENGIS, Robert Petrovich; GRIGOR'YEV, P.Ya., red.; KAGANOVA, A.A., red.; LOBANOV, D.I., red.; MANELIS, A.Ya., red.; PROTOPOPOV, S.I., red.; SIDOROV, V.A., red.; TROFIMOVA, V.I., red.; MEDRISH, D.M., tekhn.red.

[Dough products] Izdeliia iz testa. Moskva, Gos.izd-vo torg. lit-ry, 1960. 182 p. (MIRA 13:9)
(Dough) (Confectionery)

APPROVED FOR RELEASE: 09/19/2001 CIA-RDP86-00513R001343320018-6"