"APPROVED FOR RELEASE: 06/15/2000 CIA-RDP86-00513R001343730007-3

SOV/79-29-8-69/81

5(3)

AUTHORS: Pyrkov, L. M., Bresler, S. Ye., Frenkel', S. Ya.

TITLE: Investigation of Secondary Reactions in Processes of Radical Polimerization According to the Formation of "Hybrid Polymers"

PERIODICAL: Zhurnal obshchey khimii, 1959, Vol 29, Nr 8, pp 2750-2760 (USSR)

ABSTRACT: The authors continued their previous investigation of hybrid polymers (Ref 1) and in the present paper established directly the existence of secondary reactions of different types which include the interaction of macroradicals among one another as well as the interaction of radicals with the polymer chains. The evaluation of the hybrid polymer yield leads to the conclusion that the reaction, which the authors denote as an inter-chain exchange or macromolecular recombination, is less probable than an increase in the branches of the diene chains instead of an interaction of the free radicals with double bonds. The behavior of the newly formed radical after destruction - apart from reaction conditions - is determined by the tendency characteristic of the given radical to stabilize due to recombination or by other means. The more probable, e.g., the recombination typical of polystyrene, the greater is the probability of an exchange

Card 1/2

APPROVED FOR RELEASE: 06/15/2000 CIA-RDP86-00513R001343730007-3"

"APPROVED FOR RELEASE: 06/15/2000 CIA-RDP86-00513R001343730007-3

Investigation of Secondary Reactions in Processes of Radical Polimerization According to the Formation of "Hybrid Polymers" SOV/79-29-8-69/81

between the chains. Hybrid polymers forming in model systems are subject to polydispersion to the highest degree with regard to their amount and composition, so that it is impossible to determine exactly the rate constants of the corresponding secondary reactions. The data of systems in which the polimerization of the vinyl compound (styrene) took place in the presence of the diene polymer (divinyl caoutchouc) confirmed the data of several authors on the basic possibility to produce industrial graphted polymers with a "diene backbone" and vinyl side chains by this simple process (Ref 16). The diagrams given in the experimental part illustrate the results obtained. There are 11 figures and 16 references, 6 of which are Soviet.

ASSOCIATION: Institut vysokomolekulyarnykh soyedineniy Akademii nauk SSSR (Institute of High Polymer Compounds of the Academy of Sciences, USSR)

SUBMITTED: July 14, 1958

Card 2/2

APPROVED FOR RELEASE: 06/15/2000 CIA-RDP86-00513R001343730007-3"

"APPROVED FOR RELEASE: 06/15/2000 CIA-RDP86-00513R001343730007-3

L 37203-66 EWT(m)/EWP(j)/T IJP(c) WW/RM/JWD

ACC NR: AP6012416 (A) SOURCE CODE: UR/0183/65/000/006/0017/0019

AUTHOR: Batrakova, T. V.; Sheremet'yeva, T. V.; Kamalov, S. K.; Pyrkov, L. M.

ORG: IVS AN SSSR

TITLE: Preparation of fiber-forming materials based on acrylonitrile copolymers with N-alkyl amides of citraconic and maleic acids

SOURCE: Khimicheskiye volokna, no. 6, 1965, 17-19

TOPIC TAGS: synthetic fiber, acrylonitrile, copolymerization, chemical reaction, tensile strength

ABSTRACT: New copolymers of acrylonitrile with unsubstituted and with N-substituted monoamides of citraconic and maleic acids were synthesized and characterized. Copolymerizations were in aqueous media using oxidation-reduction initiators. The monoamides copolymerize with acrylonitrile in different molar ratios; their activity is greater than the activity of pure acrylonitrile since resultant copolymers were richer in monoamide than the composition of the initial mixture. Fibers formed from the copolymers were stronger than polyacrylonitrile fibers.

UDC: 677.494.745.32

Card 1/2

APPROVED FOR RELEASE: 06/15/2000 CIA-RDP86-00513R001343730007-3"

"APPROVED FOR RELEASE: 06/15/2000 CIA-RDP86-00513R001343730007-3

L 37203-66

ACC NR: AP6012416

Fibers formed when castor oil was used in the hardening bath had higher strength indices than fibers formed in a 40% aqueous dimethylformamide solution. Greates strength was obtained in compositions containing 4-5 mol% of the second component, regardless of the substitutent at the amide nitrogen. Orig. art. has: 3 tables and 1 figure.

SUB CODE: 07,11/ SUBM DATE: 10Oct64/ ORIG REF: 003/ OTH REF: 001

Card 2/2/MLP

APPROVED FOR RELEASE: 06/15/2000 CIA-RDP86-00513R001343730007-3"

"APPROVED FOR RELEASE: 06/15/2000 CIA-RDP86-00513R001343730007-3

TUMANOV, S.G., doktor tekhn.nauk; PYENKOV, V.P.

Obtaining new chrome pigments of the spinel type. Stek. i ker. 22 no.6:2-5 Je '65. (MIRA 18:6)

1. Dnlevskiy krasochnyy zavod.

APPROVED FOR RELEASE: 06/15/2000 CIA-RDP86-00513R001343730007-3"

"APPROVED FOR RELEASE: 06/15/2000 CIA-RDP86-00513R001343730007-3

L 4899-66

ACC NR: AP5026307

UR/0144/65/000/008/0923/0930
621.3.072.2 + 621.314.6

AUTHOR: Pyrkov, V.V.; (Senior lecturer); Skorovarov, V. Ye. (Head of electronics dept)

33
32
B

TITLE: Stabilized rectifier controlled by a saturation choke

SOURCE: IVUZ. Elektromekhanika, no. 8, 1965, 923-930

TOPIC TAGS: electronic rectifier, stabilizer, semiconductor device, control circuit, voltage stabilizer

ABSTRACT: Power rectifiers may be controlled either by circuits containing control valves or by incorporating saturation chokes into the control circuits. A comprehensive theoretical discussion of the problem with particular emphasis on the saturation choke approach shows that by using chokes as integrating components reacting to the variations in the mean value of the power supplying voltage, it is possible, in principle to construct a regulator of the rectifier voltage sensitive to the deviation of the input quantity. This possibility was tested on a device which uses semiconductor circuitry shaping across the choke voltages of the required form and supplies at the instant of saturation a control pulse feed to the auxiliary rectifier valve. The circuit is shown in Fig. 1 of the Enclosure. Tests show that such a device can be used in conjunction with rectifiers handling power from a few tens to several thousands of kilowatts. The experimental unit representing the simplest possible version of the device was capable of stabilizing the output voltage within ~ 1.3% for input voltage

Card 1/3

09010622

APPROVED FOR RELEASE: 06/15/2000 CIA-RDP86-00513R001343730007-3"

"APPROVED FOR RELEASE: 06/15/2000 CIA-RDP86-00513R001343730007-3

L 4899-66

ACC NR: AP5026307

changes of 10%. The response of such a rectifier during changes in load or in the input voltage is faster than 1.5 periods in the case of simple phase power supplies and faster than a whole period in the case of 3-phase systems. Orig. art. has: 10 formulas and 4 figures.

ASSOCIATION: Kafedra Elektroniki Moskovskogo Fiziko-tekhnicheskogo instituta (Department of Electronics, Moscow Institute of Physics and Technology)

SUBMITTED: 25Jul64 ENCL: 01 SUB CODE: EC

NO REF SOV: 004 OTHER: 000

APPROVED FOR RELEASE: 06/15/2000 CIA-RDP86-00513R001343730007-3"

"APPROVED FOR RELEASE: 06/15/2000 CIA-RDP86-00513R001343730007-3

L 4899-66

ACC NR: AP5026307 ENCLOSURE: 01

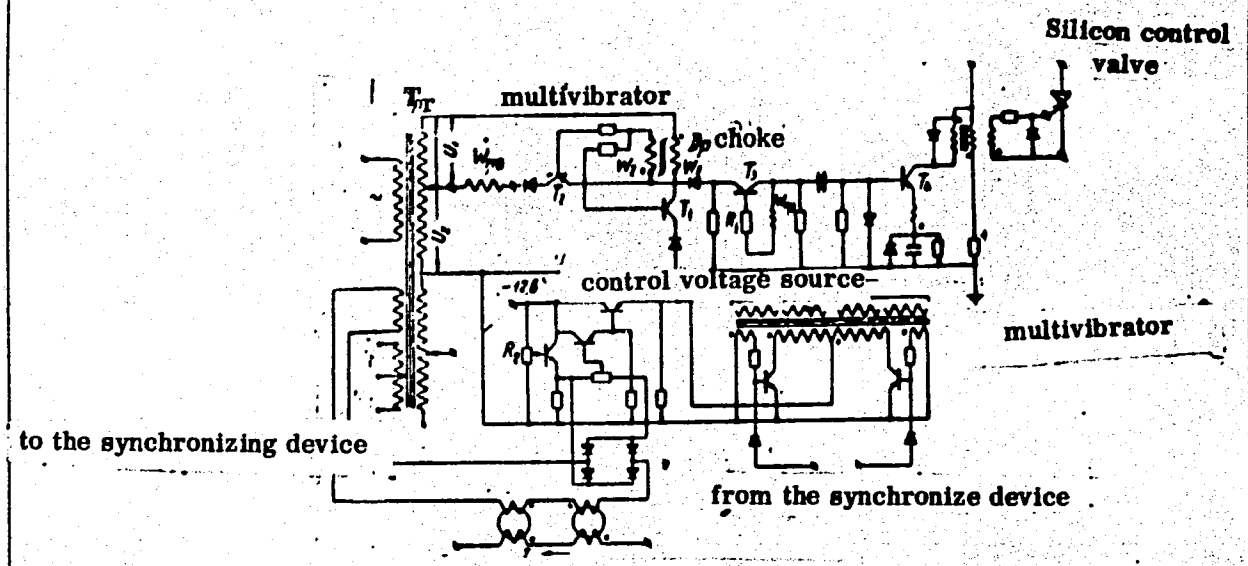

Figure 1. Principles of the rectifier control circuit.

Card 3/3

APPROVED FOR RELEASE: 06/15/2000 CIA-RDP86-00513R001343730007-3"

"APPROVED FOR RELEASE: 06/15/2000 CIA-RDP86-00513R001343730007-3

Pyrkov, V.V.

PHASE I BOOK EXPLOITATION SOV/3827

Moscow. Fiziko-tekhnicheskiy institut

Issledovaniya po fizike i radiotekhnike (Research in Physics and Radio Engineering) Moscow, Oborongiz, 1959. 170 p. (Series: Its: Trudy, vyp. 4) Errata slip inserted. 2,150 copies printed.

Sponsoring Agency: MVTER. Ministerstvo vysshego i srednego spetsial'nogo obrazovaniya.

Ed.: K.Ya. Zaytseva, Engineer; Ed. of Publishing House: S.D. Antonova; Tech. Ed.: L.A. Garnukhina; Managing Ed.: A.S. Yemovskaya, Engineer.

PURPOSE: This book is intended for scientific workers, students in advanced courses and engineers.

COVERAGE: This is a collection of 15 studies dealing with problems of radio physics, electronics, quantum physics, and aerodynamics. The studies examine the method of least squares as applied to the propagation of radio waves in the presence of a plane junction, the general conditions of stability of a random process at the output of a linear filter while a periodic unstable random process is supplied at the input of the filter, the results of experiments with a ferromagnetic specimen with large Barkhausen jumps as an explanation of the noise mechanism in ferromagnets at cyclic magnetization reversal, experiments for the determination of thermal characteristics and the results of an experimental study of a turbulent boundary layer in a supersonic flow. No personalities are mentioned. References accompany most articles.

TABLE OF CONTENTS:

Pyrkov, V.V., and V.P. Yakovlev. Similarity Between an Object and Its Optical Image 25
Conditions at which the image of an object produced by an optic system will resemble the structure of the object are determined. It is shown that for objects of finite range a similar image is impossible. The results obtained in this study define more accurately the conditions of L.I. Mandel'shtam.

Tolstov, Yu.G. [Doctor of Technical Sciences, Professor]. Germanium Power Rectifiers 29
Problems of manufacture and application of germanium power rectifiers are clarified. Methods of determining the operational parameters of germanium power rectifiers as well as control methods using saturable reactors for these rectifiers are studied.

Tolstov, Yu.G. [Doctor of Technical Sciences], G.K. Kartashov, [Candidate of Technical Sciences], and V.V. Pyrkov [Candidate of Technical Sciences]. Model of Electrotransmission of Direct Current 49
This model was designed at the Moscow Institute of Physics and Technology. The power and control systems of the model are briefly described.

Bondarenko, B.V. Temperature Dependence of the Work Function of Thermionic Cathodes 62
Reasons for the temperature dependence of the work function of various thermionic cathodes are investigated. The spot effect of the emitting surfaces of cathodes on the temperature coefficient values of the work function is shown. In the case of semiconductor cathodes the experimentally obtained values of temperature dependence $\Delta\Phi_0/\Delta T$ can be explained by the temperature variation of the electrochemical potential.

Bondarenko, B.V. Methods of Determining Thermionic Emission Constants of Semiconductor Cathodes 72
A combined method of measuring the thermionic emission constants Φ and A of semiconductor cathodes is described. This method permits measuring the work function (average for the flow and average for the surface) for the same cathode specimen, as well as determination of the temperature coefficients of the work functions, which facilitates interpretation of experimental results. Preliminary data on the energy levels of semiconductor cathodes can be obtained by making measurements over a wide temperature range.

Kiselev, A.N. Problem of Emission Decline (Fatigue) in an Oxide-Coated Cathode 85
Experimental results showing an increase in the work function and in the constant A of the oxide-coated cathode during a pulse are presented. The observed change in the work function is considered a verification of the mobile-donor hypothesis. The author thanks [illegible] Tsarev.

APPROVED FOR RELEASE: 06/15/2000 CIA-RDP86-00513R001343730007-3"

"APPROVED FOR RELEASE: 06/15/2000 CIA-RDP86-00513R001343730007-3

Pyrkov, V. V.

14(6),8(0) PHASE I BOOK EXPLOITATION SOV/3071

Akademiya nauk SSSR. Energeticheskiy institut

Elektroenergetika, vyp. 1 (Electric Power Engineering, Nr 1) Moscow, Izd-vo AN SSSR, 1959. 159 p. Errata slip inserted. 2,800 copies printed.

Eds. of Publishing House: P. P. Ogarkov and Ye. N. Grigor'yev; Tech. Ed.: Ye. V. Zelenkova; Editorial Board: Yu. G. Tolstov, Doctor of Technical Sciences (Resp. Ed.), I. M. Markovich, Doctor of Technical Sciences, I. S. Stekol'nikov, Doctor of Technical Sciences, P. I. Zubkov, Candidate of Technical Sciences, G. V. Nikhnevich, Candidate of Technical Sciences, V. I. Levitov, Candidate of Technical Sciences, and N. D. Bol'shov (Secretary)

PURPOSE: This collection of articles is intended for specialists in the various fields of electric power engineering treated in it.

COVERAGE: The first issue of the collection of articles, "Elektroenergetika," appeared in April 1959. It is published by ENIN imeni G. M. Krzhizhanovskiy of the Academy of Sciences, USSR. The articles in this issue are based on research and work by the authors under the auspices of ENIN. The articles are on a high theoretical and technical level and represent original contributions to various present-day problems in electrical engineering. References are given after most of the articles.

Pyrkov, V. V. Probles of Designing Saturable Reactors for Low-Voltage Contact Rectifiers 31

The author considers the probles of designing saturable reactors for d-c low-voltage supply for electrochemical and electrometallurgical industries, which has not been adequately treated in the current literature. He aims at presenting a systematic survey of existing methods and suggests certain concrete recommendations on methods of calculating saturable reactors. There are 10 references: 2 Soviet, 6 German and 2 English.

Utevskiy, A. M. Theory and Method of Designing Voltage-Doubling Rectifiers With a Capacitive Filter 44

The method suggested by the author was tested experimentally and found to satisfy engineering requirements. There are 11 references: 7 Soviet, 2 German and 2 English.

Gorelkin, N. V., Sh. I. Lutidze and P. M. Shpileva. Electronic Excitation of Synchronous Generators Using a Six-phase Circuit With a Buffer Rectifier 54

The authors credit Academician K. I. Shenfer with the first studies in 1933 on the problems of electronic excitation. Recent theoretical investigations on this subject were conducted in the USSR by D. A. Zavalishin, I. A. Gleboy, Ye. L. Ettinger and by the electromechanics laboratory of ENIN. The authors made a number of investigations of electronic excitation on laboratory models using different circuit combinations. All of the methods using buffer rectifiers were introduced by the laboratory. The methods and results of investigations are presented. There are 3 references, all Soviet.

Lutidze, Sh. I. Analysis of an Electronic Exciter Connected Through a Three-phase Circuit With a Buffer Rectifier. 67

The author investigates simple and reliable three-phase electronic exciter systems with buffer rectifiers and applies the method of symmetrical components to obtain expressions for currents and voltages. This article is a continuation of the previour one. There are 3 references, all Soviet.

Gorelkin, N. V. and P. M. Shpileva. Application of Germanium Rectifiers in Excitation Circuits of Synchronous Generators 93

The electromechanics laboratory of ENIN developed, in 1956, an experimental installation of a synchronous generator equipped with a rotating germanium rectifier in a bridge circuit with germanium diodes of the DGTs-24 type. Results of experiments are presented. There are 5 references: 4 Soviet and 1 English.

APPROVED FOR RELEASE: 06/15/2000 CIA-RDP86-00513R001343730007-3"

"APPROVED FOR RELEASE: 06/15/2000 CIA-RDP86-00513R001343730007-3

PYRKOV, Valentin Valentinovich, starshiy prepodavatel'; SKOROVAROV, Vladimir Yefimovich

Stabilized rectifier controlled by saturable reactors. Izv.vys.ucheb. zav.; elektromekh. 8 no.8:923-930 '65. (MIRA 18:10)

1. Kafedra elektrotekhniki Moskovskogo fiziko-tekhnicheskogo instituta (for Pyrkov). 2. Zaveduyushchiy kafedroy elektrotekhniki Moskovskogo fizikotekhnicheskogo instituta (for Skorovarov).

APPROVED FOR RELEASE: 06/15/2000 CIA-RDP86-00513R001343730007-3"

"APPROVED FOR RELEASE: 06/15/2000 CIA-RDP86-00513R001343730007-3

PYRLIN, N.P.

[Legal aspects of the medical examination of corpses] Sudebno-meditsinskoe issledovanie trupa. Moskva, 1958. 43 p. (MIRA 11:9)
(MEDICAL JURISPRUDENCE)

APPROVED FOR RELEASE: 06/15/2000 CIA-RDP86-00513R001343730007-3"

"APPROVED FOR RELEASE: 06/15/2000 CIA-RDP86-00513R001343730007-3

PYRLINA, N.P.

Role of chest injury in pulmonary tuberculosis. Sud.-med.ekspert. 2 no.3:3-8 Jl-S '59. (MIRA 13:4)

1. Kafedra sudebnoy meditsiny I Moskovskogo ordena Lenina meditsinskogo instituta imeni I.M. Sechenova (zav. - prof. V.F. Chervakov).
(TUBERCULOSIS) (CHEST--WOUNDS AND INJURIES)

APPROVED FOR RELEASE: 06/15/2000 CIA-RDP86-00513R001343730007-3"

"APPROVED FOR RELEASE: 06/15/2000 CIA-RDP86-00513R001343730007-3

PYRLIHA, N.P. (Moskva)

Sympathicogoniomas in newborns [with summary in English]. Arkh.pat. 20 no.2:82-85 '58. (MIRA 11:4)

1. Iz kafedry sudebnoy meditsiny (zav. - prof.V.F.Chervakov) I Moskovskogo ordena Lenina meditsinskogo instituta imeni I.M. Sechenova.

(NEUROBLASTOMA, in inf. & child.
sympa thicogoniama of thoracic portion of left sympath. trunk in newborn (Rus))
(SYMPATHETIC NERVOUS SYSTEM, neopl.
same)

APPROVED FOR RELEASE: 06/15/2000 CIA-RDP86-00513R001343730007-3"

"APPROVED FOR RELEASE: 06/15/2000 CIA-RDP86-00513R001343730007-3

FYRLINA, Nina Petrovna, kand. med.nauk; SHCHUKIN, P.I., red.; ZAGOREL'SKIY, Ya.I., tekhn. red.

[Medicolegal examination of material evidence; laboratory manual for students] Sudebnomeditsinskoe issledovanie veshchestvennykh dokazatel'stv; praktikum dlia studentov. Moskva, 1-i Mosk. med. in-t im. I.M.Sechenova, 1964. 63 p. (MIRA 17:3)

APPROVED FOR RELEASE: 06/15/2000 CIA-RDP86-00513R001343730007-3"

"APPROVED FOR RELEASE: 06/15/2000 CIA-RDP86-00513R001343730007-3

PYROVA-

Production of vitamin B_{12} by actinomycetes. A. Šimek, Turinová, Broncová, and Pyrová (Pharm. Biochem. Research Inst., Prague). *Československ. hyg. epidemiol., mikrobiol., imunol.* 4, 303-6(1955).—Over 100 different cultures of actinomycetes were isolated from soil and cultivated in a medium contg. soya flour 1.5, cornsteep liquor 0.5 (per dry wt.), dry brewers' yeast 0.2, NH_4NO_3 0.1, glucose 1.5, NaCl 0.3, glycerol 0.5, $CaCO_3$ 0.2, $CoCl_2.6H_2O$ 0.0009%, and water, at 27.5°, pH 7.0 under continuous shaking (100 vibrations/min.). Of the cultures tested 38% produced less than 0.25, 39% 0.26-0.50, 15% 0.51-0.75, 5% 0.76-1.00, and 3% 1.01-1.06 γ vitamin B_{12}/ml. L. J. Urbánek

HD

3

APPROVED FOR RELEASE: 06/15/2000 CIA-RDP86-00513R001343730007-3"

"APPROVED FOR RELEASE: 06/15/2000 CIA-RDP86-00513R001343730007-3

PYRKOV, A. S.

"Soil-Subsoil Conditions in the Washing Out of Salted Land in the Right-Bank Region of the Alazan River." Cand Agr Sci, Georgian Sci-Res Inst of Hydraulic Engineering and Soil Improvement, 9 Dec 54. (ZV, 30 Nov 54)

Survey of Scientific and Technical Dissertations Defended at USSR Higher Educational Institutions (11)

SO: Sum. No.521, 2 Jun 55

APPROVED FOR RELEASE: 06/15/2000 CIA-RDP86-00513R001343730007-3"

"APPROVED FOR RELEASE: 06/15/2000 CIA-RDP86-00513R001343730007-3

SYDZOVSKY, Viktor; PYROVA, Olga

Antibacterial properties of various keto compounds. Cesk. epidem. mikrob. imun 8 no.4:255-258 July 59

1. Vyzkumny ustav pro farmacii a biochemii v Praze.
(BACTERIA, pharmacol.)
(KETONES, pharmacol.)

APPROVED FOR RELEASE: 06/15/2000 CIA-RDP86-00513R001343730007-3"

"APPROVED FOR RELEASE: 06/15/2000 CIA-RDP86-00513R001343730007-3

PYRLINA, N. P.

"Legal-Medical Evaluation of Injuries of the Face." Sub 10 Sep 51, First Moscow Order of Lenin Medical Inst.

Dissertations presented for science and engineering degrees in Moscow during 1951.

SO: Sum. No. 480, 9 May 55.

APPROVED FOR RELEASE: 06/15/2000 CIA-RDP86-00513R001343730007-3"

"APPROVED FOR RELEASE: 06/15/2000 CIA-RDP86-00513R001343730007-3

PYRSIN, A.V.; LEVCHENKO, S.P. [deceased]

Possible errors in recording a ship's roll and pitch with a slit photo-recorder of rolling. Okeanologiia 4 no.4:690-694 '64. (MIRA 17:10)

1. Morskoy gidrofizicheskiy institut AN SSSR.

APPROVED FOR RELEASE: 06/15/2000 CIA-RDP86-00513R001343730007-3"

"APPROVED FOR RELEASE: 06/15/2000 CIA-RDP86-00513R001343730007-3

L 08403-67 EWT(m)/EWP(t)/ETI (A) IJP(c) JD/WW/JG
ACC NR: AP6030780 SOURCE CODE: UR/0363/66/002/004/1684/1685

33.
B

AUTHOR: Sandulova, A. V.; Bogoyavlenskaya, I. P.; Pyrsko, L. I.

ORG: L'vov Polytechnic Institute (L'vovskiy politekhnicheskiy institut)

TITLE: Effect of impurities on the growth of silicon whiskers from the gaseous phase

SOURCE: AN SSSR. Izvestiya. Neorganicheskiye materialy, v. 2, no. 9, 1966, 1684-1685

TOPIC TAGS: silicon single crystal, single crystal growth, crystal dislocation

ABSTRACT: The effect of the following impurities on the growth of silicon whiskers was studied: Pt, Au, Ag, Cu, Ni, As, Sb, In and O. The crystals were grown in a closed quartz ampoule by means of the disproportionation reaction

$$\underset{\text{Source zone}}{2SiBr_{2\,gas}} \rightleftharpoons \underset{\text{Crystallization zone}}{Si_s + SiBr_{4\,gas}}$$

Sb, In and O were found to slow down the growth of Si whiskers, and all the remaining impurities to accelerate it. The growth rate was determined as a function of the amount of each individual growth-stimulating impurity. The data obtained are used to explain the influence of the impurity on the crystallization mechanism: the impurity atoms increase the density of dislocations on the crystals of the substrate, thus

Card 1/2 UDC: 546.28:548.552

APPROVED FOR RELEASE: 06/15/2000 CIA-RDP86-00513R001343730007-3"

"APPROVED FOR RELEASE: 06/15/2000 CIA-RDP86-00513R001343730007-3

L 08403-67

ACC NR: AP6030780

promoting the nucleation and growth of the whiskers. Si whiskers grown from both pure Si and Si containing impurities are structurally perfect and free of dislocations. Orig. art. has: 3 figures and 1 table.

SUB CODE: 20/ SUBM DATE: 07Oct65/ ORIG REF: 002/ OTH REF: 002

Card 2/2

APPROVED FOR RELEASE: 06/15/2000 CIA-RDP86-00513R001343730007-3"

"APPROVED FOR RELEASE: 06/15/2000 CIA-RDP86-00513R001343730007-3

BULEYEV, N.I. (Moskva); POLOSUKHINA, K.N. (Moskva); PYSHIN, V.K. (Moskva)

Hydraulic resistance and heat transfer of a turbulent liquid flow in a rod lattice. Teplofiz. vys. temp. 2 no.5:749-757 S-O '64. (MIRA 17:11)

APPROVED FOR RELEASE: 06/15/2000 CIA-RDP86-00513R001343730007-3"

"APPROVED FOR RELEASE: 06/15/2000 CIA-RDP86-00513R001343730007-3

CHAUSHU, Em. [Ceausu, Em.]; TORZHSKU, V. [Torjescu, V.]; KALOTA, M. [Calota, M.]; PYRVU, D. [Pirvu, D.]; PARASKIV, D. [Paraschiv, D.]; ANTONIADE, M.

Ornithine carbamoyltransferase and benzidine oxidase in epidemic hepatitis. Vop. med. khim. 9 no.4:414-418 Jl-Ag'63 (MIRA 17:4)

1. Infektsionnaya bol'nitsa g. Turnu-Severin, Rumynskaya Narodnaya Respublika.

APPROVED FOR RELEASE: 06/15/2000 CIA-RDP86-00513R001343730007-3"

"APPROVED FOR RELEASE: 06/15/2000 CIA-RDP86-00513R001343730007-3

TIKHONOV, G.F. and PYRYALOV, A.A.

"Thermomechanical treatment of powders for required properties."

TITLE: The Sixth All-Union conference on Powder Metallurgy (Held at Moscow, 21 November 1962

SOURCE: Poroshkovaya metallurgiya, no. 3, 1963. p. 110

APPROVED FOR RELEASE: 06/15/2000 CIA-RDP86-00513R001343730007-3"

"APPROVED FOR RELEASE: 06/15/2000 CIA-RDP86-00513R001343730007-3

BAGAYEV, A.N.; VODZINSKIY, Yu.V.; PYRKAKOVA, A.M.

Investigating the distillation of wood tar and its products. Gidroliz. i lesokhim.prom. 18 no.4:9-11 '65. (MIRA 18:6)

1. TSentral'nyy nauchno-issledovatel'skiy i proyektnyy institut lesokhimicheskoy promyshelnnosti.

APPROVED FOR RELEASE: 06/15/2000 CIA-RDP86-00513R001343730007-3"

"APPROVED FOR RELEASE: 06/15/2000 CIA-RDP86-00513R001343730007-3

ACCESSION NR: AR4018315 S/0137/64/000/001/G037/G037

SOURCE: RZh. Metallurgiya, Abs. 1G255

AUTHOR: Tikhonov, G. F.; Sivov, A. V.; Pyeryalov, L. A.

TITLE: Effect of the particle size of 1Kh18N9T steel powder on its properties

CITED SOURCE: Tr. Gor'kovsk. politekhn. in-ta, v. 19, no. 1, 1963, 42-50

TOPIC TAGS: steel powder, steel powder flow, steel powder particle size

TRANSLATION: A study was made of the effect of the particle size on the properties of reduced powder with composition (in %): C 0.11; Si 0.12; P 0.002; S 0.011; Cr 18.77; Ni 10.45; Ti 0.51; Mn, trace. Bulk density of the powder varies between 1.49 and 2.59 g/cm^3 and flow characteristic varies from 0.46 to 1.58 g/sec. The results of a study of the bulk density versus particle size of a mixture of three powder fractions are represented in the form of a three-dimensional diagram plotted on the basis of a concentration triangle. For the reduced powder, bulk density decreases with increasing content of coarse fraction in the mixture. The opposite dependence is observed in pulverized and atomized powders. Analysis of the relationships discovered in the change of bulk density with flow characteristic showed

Card 1/2

APPROVED FOR RELEASE: 06/15/2000 CIA-RDP86-00513R001343730007-3"

"APPROVED FOR RELEASE: 06/15/2000 CIA-RDP86-00513R001343730007-3

ACCESSION NR: AR4018315

that these quantities depend only on the amount of coarse and fine fractions present in the mixture. The authors recommend the use of the concentration-triangle principle in calculating density ratio and flow characteristic of powder mixtures.
V. Miroshnikov

SUB CODE: MM ENCL: 00

Card 2/2

APPROVED FOR RELEASE: 06/15/2000 CIA-RDP86-00513R001343730007-3"

"APPROVED FOR RELEASE: 06/15/2000 CIA-RDP86-00513R001343730007-3

ACC NR: AP6036893 (N) SOURCE CODE: UR/0226/66/000/011/0009/0013

AUTHOR: Tikhonov, G. F.; Pyryalov, L. A.; Sorokin, V. K.

ORG: Gor'kiy Polytechnic Institute im. A. A. Zhdanov (Gor'kovskiy politekhnicheskiy institut)

TITLE: Selection of powders for obtaining present properties of porous materials and pressings

SOURCE: Poroshkovaya metallurgiya, no. 11, 1966, 9-13

TOPIC TAGS: metal powder, porosity, filtration, particle size

ABSTRACT: An experimental analysis was made of the correlation between the porosity, particle size, fineness of filtration filtering and the permeability factor of porous materials. A new formula is derived for determining the permeability factor at a given porosity and particle size of the material. Experimental data are presented for the fineness of filtration. One table showing the correlation of the fineness of filtration with the powder particle size and the powder fraction with fineness of filtration are given. Orig. art. has: 3 formulas and 5 tables. [Based on authors' abstract] [NT]

Card 1/1 SUB CODE: 11/SUBM DATE: 20Oct66/ORIG REF: 008/

APPROVED FOR RELEASE: 06/15/2000 CIA-RDP86-00513R001343730007-3"

"APPROVED FOR RELEASE: 06/15/2000 CIA-RDP86-00513R001343730007-3

L 24801-66 EWP(e)/EWT(m)/EWP(w)/EWA(d)/T/EWP(t)/EWP(k) IJP(c) JD/HW

ACC NR: AP6011344 SOURCE CODE: UR/0226/66/000/003/0007/0013

AUTHOR: Tikhonov, G. F.; Pyryalov, L. A.; Chertok, M. M.

ORG: Gor'kiy Polytechnic Institute im. A. A. Zhdanov (Gor'kovskiy politekhnicheskiy institut)

TITLE: Effect of spheroidization on the structure and properties of powder

SOURCE: Poroshkovaya metallurgiya, no. 3, 1966, 7-13

TOPIC TAGS: powder metallurgy, iron powder, stainless steel powder, steel microstructure, cold rolling, spheroidization

ABSTRACT: The effects of spheroidization on the structure and properties of powders were studied using iron powder manufactured by the Gulin Metallurgical Plant and 1Kh17N2, 1Kh18N15, and 1Kh18N9T stainless steel powders obtained by the simultaneous reduction method. To study the effect of spheroidization on the microcrystalline structure of powder, only the 0.200 + 0.160 mm fraction was tumbled. Prior to spheroidization it was annealed for 2 hours at 650C. As a result of tumbling the iron and stainless steel powders approximated the properties of powders of spheroidal particles. The retention of a spongy structure by the powder particles makes them a satisfactory material for rolling and pressing, as a result of which they can be recommended for the manufacture of spongy sintered materials for highly effective use as filters. Orig. art. has: 4 figures and 6 tables. [AM]

SUB CODE: 11, 13, 20/ SUBM DATE: 20Oct65/ ORIG REF: 006/ OTH REF: 002/

Card 1/1

APPROVED FOR RELEASE: 06/15/2000 CIA-RDP86-00513R001343730007-3"

"APPROVED FOR RELEASE: 06/15/2000 CIA-RDP86-00513R001343730007-3

ACCESSION NR: AR4018307 S/0137/64/000/001/G034/G034

SOURCE: RZh. Metallurgiya, Abs. 1G238

AUTHOR: Tikhonov, G. F.; Pyeryalov, L. A.

TITLE: Effect of cold deformation and spheroidization on the properties of stainless steel powder

CITED SOURCE: Tr. Gor'kovsk. politekhn. in-ta, v. 19, no. 1, 1963, 51-59

TOPIC TAGS: cold deformation, stainless steel powder, steel powder rolling, powder particle spheroidization

TRANSLATION: Stainless steel powders obtained by reduction are characterized by good rollability and pressability, but their particles have a rough surface which prevents the use of these powders for filters made by rolling. Stainless steel powders can be milled in order to give them a spherical shape. 1Kh18N9T, 1Kh18N15, and 1Kh17N2 steels were milled for 4, 8, 10, and 12 hr. After milling the particles possessed a nearly spherical shape. The most pronounced change in particle shape was displayed by powders of 1Kh18N15 and 1Kh17N2 steels. Bulk density and flow characteristic of the powders increase with milling time. The effect of the size

Card 1/2

APPROVED FOR RELEASE: 06/15/2000 CIA-RDP86-00513R001343730007-3"

"APPROVED FOR RELEASE: 06/15/2000 CIA-RDP86-00513R001343730007-3

ACCESSION NR: AR4018307

and shape of powder particles on the properties of porous materials was studied on specimens made by pressing and rolling powder of 1Kh17N2 steel. The flexibility of the raw strip decreases with increasing milling time and decreasing size of powder particles. This is explained by the fact that the powder particles are work hardened during milling, and their shape becomes close to spherical, resulting in a decrease in contact surface. The permeability of porous materials obtained by rolling the powders is determined by the size and shape of the powder particles and also by porosity of the material. Sintering does not affect the dependence of permeability on particle size, but as the latter decreases, the absolute value of the permeability diminishes markedly owing to increased shrinkage. V. Neshpor

SUB CODE: MM ENCL: 00

Card 2/2

APPROVED FOR RELEASE: 06/15/2000 CIA-RDP86-00513R001343730007-3"

"APPROVED FOR RELEASE: 06/15/2000 CIA-RDP86-00513R001343730007-3

S/0137/64/000/001/G037/G037

ACCESSION NR: AR4018316

SOURCE: RZh. Metallurgiya, Abs. 1G256

AUTHOR: Aksenov, G. I.; Pyervalov, L. A.

TITLE: Study of the properties of a porous strip

CITED SOURCE: Tr. Kuyby*shevsk. aviats. in-t, vy*p. 16, 1963, 71-84

TOPIC TAGS: porous iron powder strip, iron powder strip permeability, iron powder strip porosity

TRANSLATION: A detailed study was made of the dependence of the permeability factor of a porous strip on the type of filtering liquid, porosity, thickness, and filtration pressure. The investigation was carried out on specimens produced by rolling Fe powder of the Sulin plant. Porosity of the specimens was 15-52%. It was found that there is no direct functional dependence between porosity and permeability. The latter is independent of the nature of the filtered liquid while for the same particle size, the permeability depends on the porosity, increasing exponentially with it. As the thickness of the specimen decreases, the permeability coefficient increases and is independent of pressure in the region of laminar

Card 1/2

APPROVED FOR RELEASE: 06/15/2000 CIA-RDP86-00513R001343730007-3"

"APPROVED FOR RELEASE: 06/15/2000 CIA-RDP86-00513R001343730007-3

TIKHONOV, G.F.; PYRYALOV, L.A.; LEBEDEVA, G.V.

Effect of cold deformation on the properties of stainless steel powders. Trudy LPI no.222:45-52 '63. (MIRA 16:7)
(Rolling (Metalwork)) (Steel, Stainless) (Powder metallurgy)

APPROVED FOR RELEASE: 06/15/2000 CIA-RDP86-00513R001343730007-3"

"APPROVED FOR RELEASE: 06/15/2000 CIA-RDP86-00513R001343730007-3

PYRZALOVA, P.S.; ZIMMERMAN, Ye.N.

Reduction of aromatic and branched aliphatic nitriles with stannous chloride. Izv. vys. ucheb. zav.: khim. i khim. tekh. 8 no.1:82-87 '65. (MIRA 18:6)

1. Gor'kovskiy politekhnicheskiy institut imeni Zhdanova, kafedra tekhnologii organicheskogo sinteza.

APPROVED FOR RELEASE: 06/15/2000 CIA-RDP86-00513R001343730007-3"

"APPROVED FOR RELEASE: 06/15/2000 CIA-RDP86-00513R001343730007-3

5(3)

AUTHORS: Smolyan, Z.S., Pyryalova, P.S., Kurdyumova, N.A.

S/074/60/029/01/002/005
B008/B006

TITLE: Progress in the Field of Chlorination of Saturated Hydrocarbons

PERIODICAL: Uspekhi khimii, 1960, Vol 29, Nr 1, pp 23-54 (USSR)

ABSTRACT: This is a survey of papers published in the USSR and in foreign countries from 1947 to 1958 on the chlorination of saturated hydrocarbons. A marked growth of the chemical industry of the USSR is planned for the period between 1958 and 1965. The necessity of utilizing natural and industrial petroleum gases as raw materials is mentioned. At present, there is a noticeable tendency to increase the production of chlorine-substituted hydrocarbons. Chlorine derivatives of hydrocarbons can be prepared in various ways: The methods mainly applied are 1) hydrochlorination and chlorination of unsaturated hydrocarbons, and 2) chlorination of saturated hydrocarbons. Valuable work was done in this field by Butlerov and V.V. Markovnikov (Ref 6), D.V.Tishchenko (Ref 8), foreign (Refs 10-13), and Soviet scientists (Refs 14-29). N.N.Semenov and his school (Refs 14,15,16,29) are particularly noteworthy for

Card 1/5

APPROVED FOR RELEASE: 06/15/2000 CIA-RDP86-00513R001343730007-3"

"APPROVED FOR RELEASE: 06/15/2000 CIA-RDP86-00513R001343730007-3

their theoretical and experimental investigations of the mechanism of chain reactions. By reason of their argumentation, the chain mechanism of photochlorination may be regarded as an established fact. Further papers on this subject are given in references 10, 29-47. In industry, thermal chlorination of paraffins is carried out at 400 - 600°. These temperatures ensure a considerable reaction rate. Apart from chain reactions, homogeneous bimolecular reactions evidently take place in thermal chlorination. At sufficiently high temperatures, thermal chlorination is to a greater or less extent accompanied by pyrolysis of the initial and chlorinated products. Also, a certain amount of isomerisation of intermediates occurs. Thus, polychlorides are formed not only by chlorination of the monochloride, but also by chlorination of compounds formed by pyrolysis or isomerisation. Investigations of the chlorination of saturated hydrocarbons is mainly concentrated on the chlorination reactions of methane (Refs 10, 23,33,34,48-71). The thermal chlorination of methane, which has been realised on an industrial scale in the USSR, is described in detail in reference 72. The production of methylene

APPROVED FOR RELEASE: 06/15/2000 CIA-RDP86-00513R001343730007-3"

"APPROVED FOR RELEASE: 06/15/2000 CIA-RDP86-00513R001343730007-3

chloride in England and Eastern Germany is treated in references 73 and 74 respectively. Further chlorination methods applied in Germany are described in references 75-78. The usual preparation of carbon tetrachloride by reacting elemental chlorine with carbondisulfide (Refs 78-79) is replaced by the thermal or photochemical chlorination of methane (Ref 80). A new method developed in Romania is mentioned (Ref 81). The chlorination reactions of the other gaseous paraffins, (e.g., ethane, propane, butane) are less thoroughly investigated. The thermal chlorination of ethane is described in references 59, 82-86, and the thermal chlorination of propane and other hydrocarbons in references 6, 19,23,27,53,59,87-104. Comparatively little has been published on catalytic and photochemical chlorination processes. Of these, the reactions of methane and ethane were mainly investigated. A.V.Topchiyev and V.P.Alamiya (Ref 105) showed that the application of homogeneous catalysts in radical reactions yields very interesting results. It may be seen from publications (Refs 106-111) that various metal chlorides as well as adsorbing materials mixed with crushed calcium oxide have been used as catalysts. In paraffin chlorination, the

APPROVED FOR RELEASE: 06/15/2000 CIA-RDP86-00513R001343730007-3"

"APPROVED FOR RELEASE: 06/15/2000 CIA-RDP86-00513R001343730007-3

conditions required to obtain a certain reaction product depend not only on the type of catalyst but also on the initial paraffin. In photochlorination of paraffins, the substitution rate of primary and secondary hydrogen atoms is hardly influenced by the use of catalysts such as the chlorides of antimony, lead, aluminum, titanium, bismuth, or by iodine or sulfur. The catalytic chlorination of methane is discussed in references 24,25,48,109,112-138, and that of ethane and other saturated hydrocarbons in references 11, 21, 105, 109-111, 113, 139-147. The photochlorination reaction, which involves the splitting of a molecule into two atoms or radicals by a photon, is of great significance for the investigation of the theory of chain reactions. Both gaseous and liquid hydrocarbons can be chlorinated by the photochemical method (Refs 148-174). At present, great interest is taken in initiated chlorination. The introduction of materials into the reaction zone, which are able to form a great number of radicals, facilitates the dissociation of chlorine molecules into atoms, thus enabling chlorination at lower temperatures. In references 7,10,106, 107,110,176-180 low-temperature chlorination and the applica-

APPROVED FOR RELEASE: 06/15/2000 CIA-RDP86-00513R001343730007-3"

"APPROVED FOR RELEASE: 06/15/2000 CIA-RDP86-00513R001343730007-3

tion of various types of initiators are described. The following Soviet scientists are mentioned: B.A.Krentsel', A.V. Topchiyev, D.Ye.Il'ina, V.A.Nekrasova, N.I.Shuykin, Ya.P. Choporov, O.A.Tishchenko, V.T.Vdovichenko, I.P.Galenko, I.G. Sarashvili, R.S.Galanina, A.S.Nekrasov, A.Trifonov, A.I. Kipriyanov, T.P.Kussner, N.A.Pokatilo, L.N.Andreyev, S.S. Nametkin, A.G.Serebrennikova, A. Dobryanskiy, Ye.Gurevich, A.Lemke, D.V.Tishchenko, N.I.Kursanov, R.S.Galanina, Yu.G. Mamedaliyev, M.Efendieyeva, M.M.Ketslakh, D.M.Rudkovskiy, I.F.Suknevich, L.N. Terenin, and V.N.Kondrat'yev. There are 13 figures, 5 tables, and 180 references, 53 of which are Soviet.

APPROVED FOR RELEASE: 06/15/2000 CIA-RDP86-00513R001343730007-3"

"APPROVED FOR RELEASE: 06/15/2000 CIA-RDP86-00513R001343730007-3

29041
S/081/61/000/018/021/027
B103/B101

53700

AUTHORS: Smolyan, Z. S., Kurdyumova, N. A., Pyryalova, P. S.

TITLE: Low-temperature chlorination of ethane in the presence of initiators

PERIODICAL: Referativnyy zhurnal. Khimiya, no. 18, 1961, 340, abstract 18L10 (Sb. nauchn. rabot In-t Fiz.-organ. khimii AN BSSR, no. 8, 1960, 119-125)

TEXT: The possibility of a low-temperature chlorination of ethane in CCl_4 in the presence of initiators was pointed out. The reaction products are halogen derivatives of ethane with different degrees of substitution (27-35% C_2H_5Cl, 65-73% polychloro ethanes). Practical hints for determining the parameters of the process and its realization in an apparatus are given. [Abstracter's note: Complete translation.]

X

Card 1/1

APPROVED FOR RELEASE: 06/15/2000 CIA-RDP86-00513R001343730007-3"

"APPROVED FOR RELEASE: 06/15/2000 CIA-RDP86-00513R001343730007-3

ZIL'BERMAN, Ye.N.; PYRYALOVA, P.S.

Reduction of aliphatic nitriles under conditions of Stephen reaction. Zhur.ob.khim. 33 no.10:3420-3425 O '63. (MIRA 16:11)

1. Gor'kovskiy politekhnicheskiy institut.

APPROVED FOR RELEASE: 06/15/2000 CIA-RDP86-00513R001343730007-3"

"APPROVED FOR RELEASE: 06/15/2000 CIA-RDP86-00513R001343730007-3

ZIL'BERMAN, Ye.N.; PYRYALOVA, P.S.

Cyclization of succinic and glutaric acid dinitriles in the presence of hydrogen chloride. Zhur. org. khim. 1 no.6:983-987 Je '65. (MIRA 18:7)

1. Gor'kovskiy politekhnicheskiy institut.

APPROVED FOR RELEASE: 06/15/2000 CIA-RDP86-00513R001343730007-3"

"APPROVED FOR RELEASE: 06/15/2000 CIA-RDP86-00513R001343730007-3

L 11521-66 EWT(m)/EWP(j)/T/EWA(c) RPL WW/RM

ACC NR: AP6001871 SOURCE CODE: UR/0190/65/007/012/2150/2155

AUTHORS: Zil'berman, Ye. N.; Pyryalova, P. S.; Pomerantseva, E. G.

ORG: Gor'kiy Polytechnic Institute im. A. A. Zhdanov (Gor'kovskiy politekhnicheskiy institut)

TITLE: Polymerization of malononitrile in presence of hydrogen chloride

SOURCE: Vysokomolekulyarnyye soyedineniya, v. 7, no. 12, 1965, 2150-2155

TOPIC TAGS: polymer, polymerization polycondensation, hydrogen chloride, malonic ester, ether, benzene

ABSTRACT: The low temperature (0--20C) polymerization of malononitrile in presence of HCl was studied. The study is an extension of a previously reported work by Ye. N. Zil'berman and P. S. Pyryalova (Zh. organich. khimii, 1, 983, 1965). The reaction was carried out at 0C and room temperature by passing HCl gas through an ether or benzene solution of malononitrile. The reaction proceeded with a quantitative elimination of NH_4Cl and yielded a mixture of two different polymers. Heating of the resultant polycondensates led to further polycondensation accompanied by further elimination of NH_4Cl and formation of conjugated bonds, as evidenced by EPR spectroscopy. The structure of the polymers was studied by IR and UV spectroscopy. The intrinsic viscosities of the polymers were determined. The experimental results are presented in graphs and tables (see Fig. 1).

Card 1/2 UDC: 66.095.26+678.745

APPROVED FOR RELEASE: 06/15/2000 CIA-RDP86-00513R001343730007-3"

"APPROVED FOR RELEASE: 06/15/2000 CIA-RDP86-00513R001343730007-3

L 11521-66

ACC NR: AP6001871

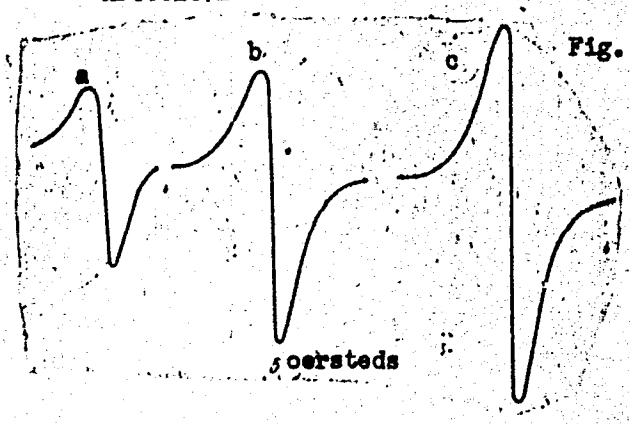

Fig. 1. EPR spectra recorded at equal amplification:
a - polymer heated to 250C (original melting point 94--97C insoluble in benzene) 2 x 10^{17} spins/g (dark-brown);
b - polymer heated to 350C (original melting point 248--250C insoluble in common organic solvents) 2.7 x 10^{18} spins/g (black);
c - polymer (b) heated to 450C; 3.4 x 10^{18} spins/g (black).

It is suggested that the polycondensation proceeds via trimerization of the malononitrile and formation of substituted diaminopyridines and aminiopyridines, which subsequently undergo polycondensation. Orig. art. has: 1 table, 1 graph, and 4 equations.

SUB CODE: 07,11/ SUBM DATE: 30Jan65/ ORIG. REF: 006/ OTH REF: 004

Card 2/2

APPROVED FOR RELEASE: 06/15/2000 CIA-RDP86-00513R001343730007-3"

"APPROVED FOR RELEASE: 06/15/2000 CIA-RDP86-00513R001343730007-3

GOROSHCHENKO, Ya.G.; VOLKOVA, M.I.; BABKIN, A.G.; PYRYAYEV, N.K.

Gravimetric method for the quantitative determination of niobium and tantalum following extraction with cyclohexanone. Zhur.anal. khim. 18 no.6:739-742 Je '63. (MIRA 16:9)

1. Kola Branch of the Academy of Sciences, U.S.S.R.
(Niobium--Analysis) (Tantalum--Analysis) (Cyclohexanone)

APPROVED FOR RELEASE: 06/15/2000 CIA-RDP86-00513R001343730007-3"

"APPROVED FOR RELEASE: 06/15/2000 CIA-RDP86-00513R001343730007-3

L 10697-63 EWP(q)/EWT(m)/BDS--AFFTC/ASD--JD

ACCESSION NR: AP3002536 S/0075/63/018/006/0739/0742

56

AUTHOR: Goroshchenko, Ya. G.; Volkova, M. I.; Babkin, A. G.; Pyryayev, N. K.

TITLE: Quantitative gravimetric determination of niobium and tantalum after their extraction with cyclohexane

27 27

SOURCE: Zhurnal analiticheskoy khimii, v. 18, no. 6, 1963, 739-742

TOPIC TAGS: tantalum gravimetric determination, niobium gravimetric determination, cyclohexane

ABSTRACT: A relatively rapid gravimetric method for the determination of niobium and tantalum has been developed. The method is based on the extraction of these metals with cyclohexane from an aqueous solution containing 400 g/l of H sub 2 SO sub 4, 200 g/l of (NH sub 4) sub 2 SO sub 4 and 100 g/l of HF. Cyclohexane is a specific extractant for niobium and tantalum and especially when ammonium sulfate is added to the solution. An aqueous solution containing about 100 g/l of H sub 2 SO sub 4 and 50 g/l (NH sub 4) sub 2 SO sub 4 will selectively extract niobium, thus gives the possibility of separating niobium from tantalum after their initial extraction with cyclohexane. According to the spectral analyses the elements Al, Y, Zr, Hf, Pb, Th, V, As, Bi, Cr, Mo, W, U, Mn sup +2 and Fe in fair amounts are

Card 1/2

APPROVED FOR RELEASE: 06/15/2000 CIA-RDP86-00513R001343730007-3"

"APPROVED FOR RELEASE: 06/15/2000 CIA-RDP86-00513R001343730007-3

L 10697-63

ACCESSION NR: AP3002536

not extracted with cyclohexane and therefore do not interfere. Ti, Sn and Sb are partially extracted with cyclohexane. MnO_4^- extracts almost completely with cyclohexane and therefore it must be converted to the reduced state Mn^{+2} by addition of $Na_2S_2O_4 \cdot 2H_2O$ to render it inactive. The P_2O_5 in quantities larger than 50 mg also interferes. All experiments were checked against standard solutions. Orig. art. has: 3 tables.

ASSOCIATION: Kol'skiy filial AN SSSR, Apatity (Kola Branch, Academy of Sciences SSSR)

SUBMITTED: 03Aug62 DATE ACQ: 12Jul63 ENCL: 00

SUB CODE: 00 NO REF SOV: 004 OTHER: 001

Card 2/2

APPROVED FOR RELEASE: 06/15/2000 CIA-RDP86-00513R001343730007-3"

"APPROVED FOR RELEASE: 06/15/2000 CIA-RDP86-00513R001343730007-3

S/200/62/000/011/007/008
D204/D307

AUTHORS: Pyr'yev, M. F. and Batsanov, S. S.

TITLE: Spectral analysis of binary mixtures of the Ce-group lanthanides

PERIODICAL: Akademiya nauk SSSR. Sibirskoye otdeleniye. Izvestiya, no. 11, 1962, 140-141

TEXT: The present work is concerned with the spectral analysis (between 3800 and 4500 Å) of La-Nd, Nd-Sm, and Pr-Nd chloride mixtures, in which the concentrations of one component in the other were 1 - 50%, using the ИСП-67 (ISP-67) spectrograph. The spectra were excited by a 5a a-c arc. Three standard samples were used to plot a calibration curve (linear within 5%) of ΔS versus $\log \frac{c_1}{c_2}$ 100%, where $\frac{c_1}{c_2}$ is the concentration ratio of the two elements in the sample and ΔS is the difference in the degree of blackening of

Card 1/2

APPROVED FOR RELEASE: 06/15/2000 CIA-RDP86-00513R001343730007-3"

"APPROVED FOR RELEASE: 06/15/2000 CIA-RDP86-00513R001343730007-3

Spectral analysis of ... S/200/62/000/011/007/008
D204/D307

the two lines on the photographic plate. Concentrations were calculated by the method of Shvangiradze (ZhAKh, 14, 562 (1959)). The mean arithmetical error of the determinations was 4 - 5%. There is 1 table.

ASSOCIATION: Institut neorganicheskoy khimii Sibirskogo otdeleniya AN SSSR, Novosibirsk (Institute of Inorganic Chemistry, Siberian Branch of the AS USSR, Novosibirsk)

SUBMITTED: January 20, 1962

Card 2/2

APPROVED FOR RELEASE: 06/15/2000 CIA-RDP86-00513R001343730007-3"

"APPROVED FOR RELEASE: 06/15/2000 CIA-RDP86-00513R001343730007-3

VAL'TSEV, V.K.; AVVAKUMOV, Ye.G.; FYR'YEV, M.F.

Distribution of lanthanides in an ammonium nitrate melt during zonal crystallization. Izv.Sib.otd.AN SSSR no.6:71-74 '61. (MIRA 14:6)

1. Institut neorganicheskoy khimii Sibirskogo otdeleniya AN SSSR, Novosibirsk.
(Rare earth metals) (Ammonium nitrate)

APPROVED FOR RELEASE: 06/15/2000 CIA-RDP86-00513R001343730007-3"

"APPROVED FOR RELEASE: 06/15/2000 CIA-RDP86-00513R001343730007-3

L 13013-63 EWP(q)/EWT(m)/BDS AFFTC/ASD JD/JG

ACCESSION NR: AP3002908 S/0289/63/000/001/0152/0154 57 56

AUTHOR: Val'tsev, V. K.; Avvakumov, Ye. G.; Py*r'yev, M. F.; Kravchenko, L. Kh.

TITLE: Separation of lanthanides in ammonium nitrate with the help of zone crystallization. Part 3

SOURCE: AN SSSR. Sibirskoye otdeleniye. Izvestiya. Seriya khimicheskikh nauk, no. 1, 1963, 152-154

TOPIC TAGS: zone crystallization, La, Hd, Er, Sm, Gd, Yt, lanthanide separation

ABSTRACT: The possibility of separating La, Nd, Er, Sm, Gd, and Yt as double sulfates from ammonium nitrate melts by zone crystallization was investigated. Separation was indicated after only 3 passes of the molten zone at 0.82 cm/hr, using ammonium sulfate as precipitant; the lanthanide double sulfates settled out in the central portion of the bar. (Ammonium oxalate was also effective as precipitant.) The lighter element is more concentrated in the latter part of the ingot; it dissolves more readily in the NH sub 4 NO sub 3 than the heavy element and passes to the end of the ingot. Optimum conditions for selective separation (selection of precipitant, length of ingot, number of passes, lanthanide concentration, etc.) remain to be worked out. Orig. art. has: 2 tables and 2 fig.

Card 1/2 1 Association: Inst. of Inorganic Chemistry, Siberian Dept., AN SSSR

APPROVED FOR RELEASE: 06/15/2000 CIA-RDP86-00513R001343730007-3"

"APPROVED FOR RELEASE: 06/15/2000 CIA-RDP86-00513R001343730007-3

23631

S/200/61/000/006/003/004
D206/D303

5.2300 1087, 1155, 1228

AUTHORS: Val'tsev, V.K., Avvakumov, Ye. G. and Pyr'yev, M.F.

TITLE: Distribution of lanthanoids in the fusion of ammonium nitrate in the process of zoned crystallization

PERIODICAL: Akademiya nauk SSSR. Sibirskoye otdeleniye. Izvestiya, no. 6, 1961, 71-74

TEXT: The purpose of this work was the study of the distribution of the reaction products of rare-earth oxides (La, Pr, Nd, Sa, Er and Y) with fused ammonium nitrate in the process of zoned crystallization. There appears to be little published information concerning the application of zoned crystallization for separating and purifying rare-earth elements, although the method has been employed by Sue et al (Ref. 1: P. Sue, I. Pauly, Bull. Soc. Chim. de France, No. 5, 593 (1958) for isolating other elements with similar chemical properties. Further research by V. Val'tsev and V. Kovyrzina (Ref. 5: Izv. sibir. otdel. Akad Nauk SSSR, No. 10, 1960) resulted in the development of a technique for obtaining the double nitrate of lan-

Card 1/4

APPROVED FOR RELEASE: 06/15/2000 CIA-RDP86-00513R001343730007-3"

"APPROVED FOR RELEASE: 06/15/2000 CIA-RDP86-00513R001343730007-3

23631

S/200/61/000/006/003/004
D206/D303

Distribution of lanthanoids...

thanum and in certain data regarding its solubility in fused ammonium nitrate. The experimental procedure adopted by the authors comprises the initial solution of rare-earth oxides in molten ammonium nitrate; the cooling of the melt in an aluminum boat, with the formation of a semi-cylindrical slab having a length of 32 cm; the refusion of the slab at 170 - 190°C in a molybdenum-glass tube by means of a heater which is fitted with a thermocouple and rheostat to ensure smooth temperature control and which is moved over the slab at a speed of 0.82 cm/hr; the removal of the slab from the boat after a period of 45 hours; and the subsequent dissection of the slab into ten equal parts which are then analyzed for the rare-earths. During the passage of the salt slab through the molten zone the rare-earths are redistributed in such a way that their concentration at the end of the slab considerably exceeds the original value. The distribution curves for the nitrates of Nd, Sa and Y are shown graphically. The coefficient of enrichment (K) - necessary for comparing the behavior of elements in the process of zoned crystallization - was calculated from the ratio of their inital to final concentration. After three slab runs through the fused zone the dis-

Card 2/4

APPROVED FOR RELEASE: 06/15/2000 CIA-RDP86-00513R001343730007-3"

"APPROVED FOR RELEASE: 06/15/2000 CIA-RDP86-00513R001343730007-3

23631

S/200/61/000/006/003/004
D206/D303

Distribution of lanthanoids...

tribution of elements at the end of the slab is in direct linear relationship to their atomic weights (A): K = 0.063A - 7.33. This relationship also holds for a slab of heterogeneous composition prepared in a slightly different manner. Coefficients of separation - the ratio of the enrichment coefficients for certain pairs of elements - were found in order to appraise the possibility of purifying particular elements. They reach a maximum when nitrates are crystallized in a heterogeneous slab, after no less than nine runs through the fused zone. The pairs Sa - Y and Nd - Sa were therefore subjected to zoned purification under these conditions which are evidently the most favorable for purifying certain pairs of rare-earth elements. A relatively pure separation is effected in the case of samarin and yttrium: the yttrium content rises from 97.1% to 99.2%, while the samarin concentration falls from 2.9% to 0.8%. The removal of neodymium from yttrium, however, was not successfully accomplished. This is believed to be due to the fact that the distribution of rather large amounts of rare-earths in ammonium nitrate differs from the normal distribution specified by existing equations (Ref. 6: Metody polucheniya chistykh metallov (Methods of Obtaining

Card 3/4

APPROVED FOR RELEASE: 06/15/2000 CIA-RDP86-00513R001343730007-3"

"APPROVED FOR RELEASE: 06/15/2000 CIA-RDP86-00513R001343730007-3

23631
S/200/61/000/006/003/004
D206/D303

Distribution of lanthanoids...

Pure Metals), Sb. perevodov (Collection of translations), IL, 1957) which are only applicable in the case of a low concentration of impurities in a slab in the process of zoned crystallization. The authors conclude that their method is only suitable for separating some elements of the yttrium and cerium groups; it is not recommended for purifying mixtures consisting of elements from other rare-earth groups with very similar properties. There are 3 figures, 1 table and 6 references: 2 Soviet-bloc and 4 non-Soviet-bloc. The references to the English-language publications read as follows: J.K. Marsh, J. Chem. Soc. No. 1, 2051 (1946); R.C. Vickery, J. Chem. Soc. No. 10, 2508 (1949); T. Meller, V. Aftandialian, J. Amer. Chem. Soc. 76, 5249 (1954).

ASSOCIATION: Institut neorganicheskoy khimii Sibirskogo otdeleniya AN SSSR (Organic Chemistry Institute of the Siberian Division, AS USSR) Novosibirsk

SUBMITTED: September 7, 1960

Card 4/4

APPROVED FOR RELEASE: 06/15/2000 CIA-RDP86-00513R001343730007-3"

"APPROVED FOR RELEASE: 06/15/2000 CIA-RDP86-00513R001343730007-3

PYR'YEV, M.F.; BATSANOV, S.S.

Spectrum analysis of binary mixtures of lanthanides of the cerium group. Izv. Sib. otd. AN SSSR no. 11:140-141 '62. (MIRA 17:9)

1. Institut neorganicheskoy khimii Sibirskogo otdeleniya AN SSSR, Novosibirsk.

APPROVED FOR RELEASE: 06/15/2000 CIA-RDP86-00513R001343730007-3"

"APPROVED FOR RELEASE: 06/15/2000 CIA-RDP86-00513R001343730007-3

ZAKHARCHENKO, V. N., gornyy inzh.; TUMAKOV, V. A., gornyy inzh.; PYS', F. N., gornyy inzh.

Working thin ore bodies with slim inclined boreholes. Gor. zhur. no.11:36-41 N '62. (MIRA 15:10)

1. Sredneaziatskiy gosudarstvennyy institut tsvetnykh metallov, Almalyk, Tashkentskaya oblast'.

(Kurgashinkan region--Boring)

APPROVED FOR RELEASE: 06/15/2000 CIA-RDP86-00513R001343730007-3"

"APPROVED FOR RELEASE: 06/15/2000 CIA-RDP86-00513R001343730007-3

L 15006-65 EWT(m)/EWP(k)/EWA(d)/EWP(t)/EWP(b) Pf-4 RM/JD/HW

ACCESSION NR: AP4045899 S/0021/64/000/009/1159/1162

AUTHOR: Py*sarenko, G. S. (Pisarenko, G. S.) (Academician AN UkrSSR); Kozlov, I. A.

B

TITLE: Investigation of deformation of a rotating disk in the region of extremely small elastic-plastic deformations

SOURCE: AN UkrRSR. Dopovidi, no. 9, 1964, 1159-1162

TOPIC TAGS: plastic theory, stressed state, new parameter, carrying capacity, machine part

ABSTRACT: Discussed are very small (1%) deformations which are not in conformity with the plastic theory which holds for larger deformations. This was evident from experiments carried out by the authors on disks of

APPROVED FOR RELEASE: 06/15/2000 CIA-RDP86-00513R001343730007-3"

"APPROVED FOR RELEASE: 06/15/2000 CIA-RDP86-00513R001343730007-3

vy, can be developed. Orig. art. has: 2 figures and 15 formulas.

Card 1/2

L 15006-65

ACCESSION NR: AP4045899

ASSOCIATION: Instytut problem materialoznavstva AN URSR (Institute for the Problems of the Strength of Material, AN URSR)

SUBMITTED: 18Mar64 ENCL: 00 SUB CODE: ME, AS

NO REF SOV: 004 OTHER: 000

Card 2/2

APPROVED FOR RELEASE: 06/15/2000 CIA-RDP86-00513R001343730007-3

"APPROVED FOR RELEASE: 06/15/2000 CIA-RDP86-00513R001343730007-3

ACCESSION NR: AP4010059 S/0021/64/000/001/0059/0062

AUTHOR: Pyasarenko, G. S. (Corresponding member); Lebedev, A. O.

TITLE: On the criterion of strength of materials

SOURCE: AN UkrSSR. Dopovidi, no. 1, 1964, 59-62

TOPIC TAGS: material strength, stress tensor, stress tensor invariant, stressed silicon carbide

ABSTRACT: Proof is given of the applicability of an estimate of the strength of materials in the form of a sum of two functions, one of which is a function of the stress tensor invariants, while the second, which is a function of the volume of the strained material and some of its constants, is of a statistical nature.

The results are presented of an experimental study of the strength on a silicon carbide base with a plane stressed state. These results confirm the applicability and usefulness of the method. Orig. art. has 3 graphs and 6 numbered equations.

Card 1/2

APPROVED FOR RELEASE: 06/15/2000 CIA-RDP86-00513R001343730007-3"

"APPROVED FOR RELEASE: 06/15/2000 CIA-RDP86-00513R001343730007-3

ACCESSION NR: AP4010059

ASSOCIATION: Instytut Metalokeramiky* ta spetsplaviv AN UkrSSR (Institute of Metallo-ceramics and Special Alloys, AN UkrSSR)

SUBMITTED: 05Jun63 DATE ACQ: 10Feb64 ENCL: 00

SUB CODE: AP NO REF SOV: 005 OTHER: 002

Card 2/2

APPROVED FOR RELEASE: 06/15/2000 CIA-RDP86-00513R001343730007-3"

"APPROVED FOR RELEASE: 06/15/2000 CIA-RDP86-00513R001343730007-3

29176
S/021/61/000/010/002/008
D251/D303

26.2122

AUTHORS: Pysarenko, H.S., Corresponding Member AS UkrSSR, Vasylenko, M.V., and Klikh, Yu.O.

TITLE: Coupled bending and torsional vibrations of a turbine blade during transition across resonance

PERIODICAL: Akademiya nauk Ukrayins'koyi RSR. Dopovidi, no. 10, 1961, 1271 - 1274

TEXT: The authors state that the differential equations for the problem (ignoring unknown displacements in the direction of greatest rigidity of the cross-section of the blade) are of the form

$$\left.\begin{aligned} &\frac{\partial^2}{\partial z^2}\left(EI\frac{\partial^2 y}{\partial z^2}\right) + m\frac{\partial^2 y}{\partial t^2} - mx_c\frac{\partial^2 \theta}{\partial t^2} = \varepsilon[q(z)\cos pt - f_1(z, t)] \\ &-\frac{\partial}{\partial z}\left(GI_d\frac{\partial \theta}{\partial z}\right) + I_m\frac{\partial^2 \theta}{\partial t^2} - mx_c\frac{\partial^2 y}{\partial t^2} = \varepsilon[-m_z(z)\cos pt + f_2(z, t)] \end{aligned}\right\}, \quad (1)$$

Card 1/4

APPROVED FOR RELEASE: 06/15/2000 CIA-RDP86-00513R001343730007-3"

"APPROVED FOR RELEASE: 06/15/2000 CIA-RDP86-00513R001343730007-3

where EI, GI_d are the rigidity under bending and torsion respectively, m, I_m are the mass and moment of inertia of the mass of unit length of the blade, x_c is the distance between the centers of gravity and rigidity of the cross-section, $y(z, t)$ is the cross-section, $\theta(z, t)$ the angle of torsion, $q(z)$ the intensity of load on the axis of elasticity, $m_z(z)$ is the intensity of the moment of that load relative to the axis of torsion, p is the frequency of the perturbing force. The first approximation gives the partial solution

$$\left.\begin{aligned} y(z, t) &= Y(z)\, a \cos(pt + \psi) \\ \theta(z, t) &= \Theta(z)\, b \cos(pt + \psi) \end{aligned}\right\}, \qquad (2)$$

where the coefficients of amplitude a and b and the phase angle are functions of time and satisfy

$$\frac{da}{dt} = -\frac{\chi_2(a)}{2\pi M\omega} - \frac{A}{M(\omega + p)} \sin\psi \qquad (3)$$

APPROVED FOR RELEASE: 06/15/2000 CIA-RDP86-00513R001343730007-3"

"APPROVED FOR RELEASE: 06/15/2000 CIA-RDP86-00513R001343730007-3

29176

S/021/61/000/010/002/008
D251/D303

Coupled bending and torsional ...

$$\frac{d\psi}{dt} = \omega - p - \frac{\chi_1(a)}{2\pi M\omega} - \frac{A}{aM(\omega+p)} \cos\psi, \qquad (3)$$

where

$$M = \int_0^l [mY^2 + 2\beta m x_c Y\Phi + \beta^2 I_m \Phi^2] dz$$

$$A = \int_0^l [q(z) Y(z) + \beta m_z(z) \Phi(z)] dz$$

$$\chi_1(a) = \int_0^l \int_0^{2\pi} [f_{10}(z, t) Y(z) + \beta f_{20}(z, t) \Phi(z)] \cos\tau dz d\tau \qquad (4)$$

$$\chi_2(a) = \int_0^l \int_0^{2\pi} [f_{10}(z, t) Y(z) + \beta f_{20}(z, t) \Phi(z)] \sin\tau dz d\tau$$

$$\tau = pt + \psi$$

These equations were analyzed by computer and the results for transition across the resonance are given in the form of graphs (Fig.1).

Card 3/4

APPROVED FOR RELEASE: 06/15/2000 CIA-RDP86-00513R001343730007-3"

"APPROVED FOR RELEASE: 06/15/2000 CIA-RDP86-00513R001343730007-3

Coupled bending and torsional ... S/021/61/000/010/002/008
D251/D303

The article is concluded with a worked example. There are 2 Soviet-bloc references and 1 figure.

ASSOCIATION: Instytut metalokeramiky i spetssplaviv AN URSR (Institute of Metal Powders and Special Alloys AS UkrSSR)

SUBMITTED: May 29, 1961

Fig. 1.

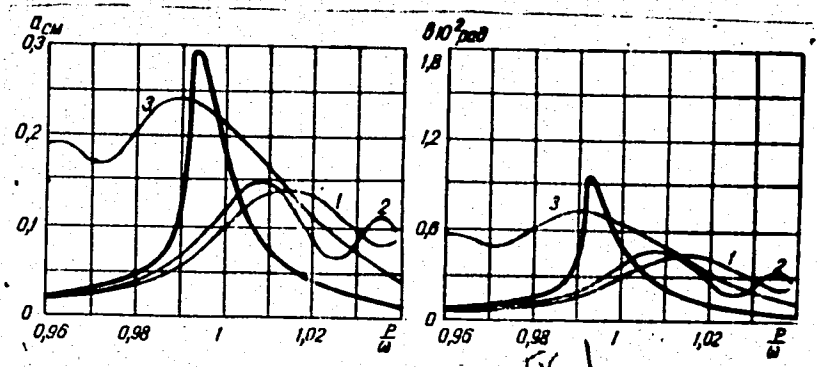

Рис. 1.

FIG. 1

Card 4/4

APPROVED FOR RELEASE: 06/15/2000 CIA-RDP86-00513R001343730007-3"

"APPROVED FOR RELEASE: 06/15/2000 CIA-RDP86-00513R001343730007-3

PYRYATINSKY, L.B.

EXCERPTA MEDICA Sec.4 Vol.11/3 Med.Microbio.,etcMar 58

702. CHANGES IN IMMUNOLOGICAL REACTIVITY IN THE POLAR REGION IN DIFFERENT SEASONS OF THE YEAR. (Russian text). - Pyryatinsky L. B. - Z. MIKROBIOL. 1957, 3 (65-66) Tables 2

The immunological reactivity in 321 young people, living in the polar part of SSSR, was tested. To each person an intradermal injection of 0.1 ml. of an 'antihuman serum' was given. The serum was produced from rabbits immunized against human protein. As control the serum of normal rabbits was used. In the 1st group the test was performed in the polar night, in the 2nd group in the polar day. Both groups were of the same age. Of the 130 persons tested in the polar night, ++ or + reactions were observed in 35.3%; in the polar day group in 72%. The 3rd group of 80 persons was injected the first time in the polar night, the second time in the polar day. An enhancement of reaction was noticed in 55 persons (68.7%), 22 (27.5%) showed no change and 3 had a lowered reaction.

Wagner - Prague

APPROVED FOR RELEASE: 06/15/2000 CIA-RDP86-00513R001343730007-3"

"APPROVED FOR RELEASE: 06/15/2000 CIA-RDP86-00513R001343730007-3

M. PYSARENKO

PHASE I BOOK EXPLOITATION SOV/4398

Akademiya nauk URSR. Instytut elektrozvaryuvannya imeni Ye. O. Patona

Instytut elektrozvaryuvannya imeni Ye. O. Patona (Institute of Electric Welding imeni Ye. O. Paton) Kyyiv, Derzhtekhvydav URSR, 1959. 155 p. 1,300 copies printed.

Ed.: M. Pysarenko; Tech. Ed.: K. Husarov.

PURPOSE: This book is intended for technical personnel in welding.

COVERAGE: The author describes the administrative structure and functions of the Electric Welding Institute imeni Ye. O. Paton and the welding methods and equipment developed there and introduced into industry. A list of published works of the Institute is presented at the end of the book. No personalities are mentioned. There are no references.

Card ~~1/3~~

APPROVED FOR RELEASE: 06/15/2000 CIA-RDP86-00513R001343730007-3"

"APPROVED FOR RELEASE: 06/15/2000 CIA-RDP86-00513R001343730007-3

PYBER, Laszlo, mernok, tudomanyos munkatars

The hydrologically possible enlargement of the Hamor Reservoir. Vizugyi kozl no.4:620-627 '64.

1. Scientific Research Institute of Water Resources Development, Budapest.

APPROVED FOR RELEASE: 06/15/2000 CIA-RDP86-00513R001343730007-3"

"APPROVED FOR RELEASE: 06/15/2000 CIA-RDP86-00513R001343730007-3

PYSENKO, N. A.

"The Development of New Types of Reflecting Projection Screens." Cand Tech Sci, All-Union Sci-Res Cinephotogra hic Inst, Ministry of Culture USSR,11 Nov 54. (VM, 1 Nov 54)

Survey of Scientific and Technical Dissertations Defended at USSR Higher Educational Institutions (11)

SO: Sum. No. 521, 2 Jun 55

APPROVED FOR RELEASE: 06/15/2000 CIA-RDP86-00513R001343730007-3"

"APPROVED FOR RELEASE: 06/15/2000 CIA-RDP86-00513R001343730007-3

PYSHCHEVA, M.V.

Scientific pharmaceutical society of Saratov. Apt. delo 12 no.6:67-68 N-D '63. (MIRA 17:2)

APPROVED FOR RELEASE: 06/15/2000 CIA-RDP86-00513R001343730007-3"

"APPROVED FOR RELEASE: 06/15/2000 CIA-RDP86-00513R001343730007-3

PYSHCHEVA, Z.M.

Relation between the physical and sowing qualities of monospermous sugar beets, and the time of harvesting the seed plants. Sakh.prom. 34 no.8:60-61 Ag '60. (MIRA 13:8)

1. Vsesoyuznyy nauchno-issledovatel'skiy institut sakharnoy svekly.
(Sugar beets)

APPROVED FOR RELEASE: 06/15/2000 CIA-RDP86-00513R001343730007-3"

"APPROVED FOR RELEASE: 06/15/2000 CIA-RDP86-00513R001343730007-3

PYSHNOV, V.S., general-leytenant inzhenerno-tekhnicheskiy sluzhby, prof., zasluzhennyy deyatel' nauki i tekhniki.

"Indicators of the maneuverability, controllability, and stability of airplanes" by G.S. Kalachev. Reviewed by V.S. Pyshnov. Vest. Vozd. Fl. 41 no. 7:87-88 Jl '58. (MIRA 11:7)

(Navigation(Aeronautics)
(Aerodynamics)
(Kalachev, G.S.)

APPROVED FOR RELEASE: 06/15/2000 CIA-RDP86-00513R001343730007-3"

"APPROVED FOR RELEASE: 06/15/2000 CIA-RDP86-00513R001343730007-3

PYSHENKIN, A.D.

Effect of the shearing season on the color and quality of the wool of blackhead sheep. Agrobiologiia no.6:123-125 N-D '58. (MIRA 12:1)

1.Chernigovskaya gosudarstvennaya sel'skokhozyaystvennaya opytnaya stantsiya.
(Wool) (Sheep shearing)

APPROVED FOR RELEASE: 06/15/2000 CIA-RDP86-00513R001343730007-3"

"APPROVED FOR RELEASE: 06/15/2000 CIA-RDP86-00513R001343730007-3

PYSHENKIN, A. D.: CAND. Master Biol Sci (diss) -- "One method of increasing the viability and productivity of sheep". Khar'kov, 1959. 22 pp (Min Higher Educ Ukr SSR, Khar'kov Order of Labor Red Banner State U im A. M. Gor'kiy), 150 copies (KL, No 6, 1959, 130)

APPROVED FOR RELEASE: 06/15/2000 CIA-RDP86-00513R001343730007-3"

"APPROVED FOR RELEASE: 06/15/2000 CIA-RDP86-00513R001343730007-3

PROCESSES AND PROPERTIES INDEX

7

Ca

Determination of cadmium and mercury with pyridine. I. P. Ryazanov and M. V. Pyshcheva. *Uchenye Zapiski Saratov. Gosudarst. Univ. im. N. G. Chernyshevskogo, Khim.* 15, No. 4, 128-33(in French, 133)(1940).—Satisfactory results in detg. Cd were obtained by the method of Spacu (*C. A.* 22, 1927; 23, 1569) in which the Cd is pptd. as $(CdPy_2)(CNS)_2$ and weighed as such after drying with EtOH and ether. Excellent results in detg. Hg were obtained by the method of Spacu (*C. A.* 23, 2984) in which the Hg is pptd. and weighed as $(HgPy_2)Cr_2O_7$. Excellent results were also obtained by the method of Lang in which the Hg is pptd. and weighed as $HgCl_2Py$. The conclusion is drawn that the methods of Spacu for the detn. of Cd and Hg produce accurate results and reduce the time of the analysis considerably (only 30-40 min. are required). For sepg. Cd from Hg the Hg is obtained in the form of $HgCl_2Py$ according to Lang and Cd is pptd. in the filtrate as $(CdPy_2)(CNS)_2$. Difficulties were encountered in washing and drying the $HgCl_2Py$ which does not dissolve in water contg. pyridine, but dissolves in alc. The ppt. was, therefore, washed only with water contg. pyridine, but not with alc. This increased the time of drying from 15 min. to 2 hrs. No difficulties were encountered in drying Cd. The percentage errors for Hg and Cd were 0.05-1.5 and 0.00-1.83%, resp. Eight references. W. R. H.

ASM-SLA METALLURGICAL LITERATURE CLASSIFICATION

APPROVED FOR RELEASE: 06/15/2000 CIA-RDP86-00513R001343730007-3"

"APPROVED FOR RELEASE: 06/15/2000 CIA-RDP86-00513R001343730007-3

PYSHIN, V K.

22819
S/170/61/004/005/002/015
B104/B205

21.4210

AUTHORS: Buleyev, N. I., Vvedenskiy, V. N., Nakhutin, I. Ye., Pyshin, V. K.

TITLE: Calculation of the temperature and the adsorptive capacity of an adsorbent with internal sources of heat

PERIODICAL: Inzhenerno-fizicheskiy zhurnal, v. 4, no. 5, 1961, 8-11

TEXT: The effect of dissipation of radioactive radiation on the temperature and capacity of an adsorbent has been studied. A gas containing a radioactive component is blown through a tube of radius r_0 and length z_0 along the axis. The tube is filled with a granular adsorbent. The authors attempted to determine the capacity of the adsorbent under steady conditions. Therefore, it is obviously necessary to find the temperature distribution in the adsorbent as a function of r and z. This temperature distribution is expressed by the differential equation

$$\lambda\left(\frac{\partial^2 t}{\partial r^2} + \frac{1}{r}\frac{\partial t}{\partial r} + \frac{\partial^2 t}{\partial z^2}\right) - GC_p\frac{\partial t}{\partial z} = -g(t) \quad (1),$$

Card 1/5

APPROVED FOR RELEASE: 06/15/2000 CIA-RDP86-00513R001343730007-3"

"APPROVED FOR RELEASE: 06/15/2000 CIA-RDP86-00513R001343730007-3

where λ is the effective coefficient of thermal conductivity of the granular adsorbent in the gas concerned, C_p the specific heat of the gas, g the density of the internal sources of heat, and G the weight of the gas passing through the tube per unit time. $g(t)$ is proportional to the amount $q(t)$ of radioactive gas adsorbed per unit volume at temperature t, and is proportional to the mean energy E of one decay and inversely proportional to half-life T: $g = 0.69\, nq(t)E/T$, where n is the Loschmidt number. $q(t)$ can be expressed by the empirical relation $q(t) = q(t_o)\exp\{-k(t-t_o)\}$. k depends on the partial pressure p of the radioactive component but not on temperature. If $z_o/r_o \gg 1$ and if the heat transport through the gas stream is much larger than the heat transport effected by heat conduction along z, i.e., if the term $\lambda\partial^2 t/\partial z^2$ in (1) is negligible, then it is possible to represent (1) in the form

$$\partial^2\tau/\partial^2\rho + \frac{1}{\rho}\,\partial\tau/\partial\rho - \beta\partial\tau/\partial\xi = -\gamma\exp(-\tau) \quad (5)$$

after introduction of the variables $\rho = r/r_o$, $\xi = z/r_o$, and $\tau = k(t-t_o)$.

APPROVED FOR RELEASE: 06/15/2000 CIA-RDP86-00513R001343730007-3"

"APPROVED FOR RELEASE: 06/15/2000 CIA-RDP86-00513R001343730007-3

(5) is solved with the following boundary conditions:

$$\tau_{\rho=0} = 0,\ (\partial\tau/\partial\rho)_{\rho=0} = 0,\ (\partial\tau/\partial\rho)_{\rho=1} = -\alpha r_0\tau/\lambda = -\delta\tau \quad (8.2),$$

where α is the heat-exchange coefficient at the boundary between the adsorbent and the wall of the tube. If $\beta = 0$, Eq. (5) can be represented in the form

$$\tau'' + \tau'/\rho = -\gamma\exp(-\tau) \quad (9).$$

The solution of this equation reads: $\tau = 2\ln(\gamma_1\rho^{h_1} + \gamma_2\rho^{h_2}) - \ln W$ (10), where γ_1 and γ_2 are constants, and $h_{1,2}$ are roots of the equation $h^2 - 2h + c/2 = 0$. It is shown that h_1 or h_2 must be equal to zero and $c = 0$. Thus, one obtains

$$\tau = 2\ln(\gamma_1 + \gamma_2\rho^2) - \ln(\gamma_1\gamma_2/-\gamma) = \ln\left[-\frac{\gamma}{8}(\sqrt{\gamma_1/\gamma_2} + \rho^2\sqrt{\gamma_2/\gamma_1})^2\right]. \quad (12)$$

Hence, the solution depends only on γ, since γ_1/γ_2 can be determined from the condition (8.2): $f = \gamma_1/\gamma_2 = -(4/\gamma + 1) - \sqrt{16/\gamma^2 + 8/\gamma}$ (13),

Card 3/5

APPROVED FOR RELEASE: 06/15/2000 CIA-RDP86-00513R001343730007-3"

"APPROVED FOR RELEASE: 06/15/2000 CIA-RDP86-00513R001343730007-3

wherefrom it follows that $\tau = \ln(f+\rho^2)^2/(f+1)^2$. When $\tau = F(\rho)$ is found, also the adsorptive capacity can be easily calculated:

$$Q = 2\pi r_0^2 z_0 q(t_0) \int_0^1 \frac{(f+1)^2}{(f+\rho^2)^2} \rho d\rho = Q_0 \left(1 + \frac{1}{f}\right). \quad (17)$$

In general, Eq. (5) cannot be solved by quadratures, and numerical methods are applied instead. Such calculations have been made, and Fig. 2 shows the solutions obtained for three different values of γ. This figure illustrates the effect of the gas stream on temperature: In the initial part τ is notably smaller than at a certain distance from the inlet. From a certain value of $\xi = z/r_0$ onward τ may be assumed to equal the reduced temperature which holds for an infinitely extended cross section and is obtained from (14). There are 2 figures and 6 references: 5 Soviet-bloc and 1 non-Soviet-bloc.

SUBMITTED: October 3, 1960

Card 4/5

APPROVED FOR RELEASE: 06/15/2000 CIA-RDP86-00513R001343730007-3"

"APPROVED FOR RELEASE: 06/15/2000 CIA-RDP86-00513R001343730007-3

TITLE: Hydraulic resistance and heat transfer in turbulent fluid flow in a grid of bars

SOURCE: Teplofizika vy*sokikh temperatur, v. 2, no. 5, 1964, 749-757

TOPIC TAGS: heat exchange, nuclear reactor, turbulent flow, fluid velocity vector, temperature gradient

ABSTRACT: The authors solved the basic equations of motion and energy of a fluid stream in a bar grid such as the grids used for heat distribution in certain nuclear reactor types. Use was made of simplified expressions for the coefficients of turbulent viscosity and temperature conduction developed previously by N. I. Buleyev (V sb. "Voprosy* teploobmena", Izd-vo AN SSSR, 1959). Consideration was made of grid bars arranged in both triangular and square fashion. The authors first [illegible] of computing the flow velocity field by considering the flow in a

APPROVED FOR RELEASE: 06/15/2000 CIA-RDP86-00513R001343730007-3"

"APPROVED FOR RELEASE: 06/15/2000 CIA-RDP86-00513R001343730007-3

Card 1/2

L 10715-65

ACCESSION NR: AP4047380

Plots are presented showing the manner of variation of the resistance coefficient with Reynolds number for a variety of grid and flow arrangements. By considering the grids as heat sources, the authors derived

APPROVED FOR RELEASE: 06/15/2000 CIA-RDP86-00513R001343730007-3"

"APPROVED FOR RELEASE: 06/15/2000 CIA-RDP86-00513R001343730007-3

ASSOCIATION: none

SUBMITTED: 10Jun63

ENCL: 00

SUB CODE: ME

NO REF SOV: 006

OTHER: 001

Card 2/2

APPROVED FOR RELEASE: 06/15/2000 CIA-RDP86-00513R001343730007-3"

"APPROVED FOR RELEASE: 06/15/2000 CIA-RDP86-00513R001343730007-3

L 14464-65 EWT(m)/EPF(c)/EPF(n)-2/EPR Pr-4/Ps-4/Pu-4 AEDC(b)/AFWL/BSD/SSD
DM

ACCESSION NR: AP4036523 S/0089/64/016/005/0407/0413

B

AUTHOR: Bagdasarov, Yu.Ye.; Kazachkovskiy, O.D.; Pinkhasik, M.S.; Pyshin, V.K.

TITLE: Study of unsteady operating conditions for natural circulation in multiloop designs of nuclear reactors 19

SOURCE: Atomnaya energiya, v. 16, no. 5, 1964, 407-413

TOPIC TAGS: nuclear reactor cooling, liquid metal cooling, unsteady reactor operating condition, reactor emergency shutdown

ABSTRACT: The authors have developed a method of computation of unsteady operating conditions (emergency shutdown) for natural circulation in multiloop designs of nuclear reactors. The essential point to be considered is the delay factor which depends on the heat exchange between the coolant and the stationary parts

APPROVED FOR RELEASE: 06/15/2000 CIA-RDP86-00513R001343730007-3"

"APPROVED FOR RELEASE: 06/15/2000 CIA-RDP86-00513R001343730007-3

and liquid sodium were considered. Experimental results are in good agreement

Card 1/2

L 14464-65

ACCESSION NR: AP4036523

0

with the computations. Of the factors mentioned above, the most important one is the heat exchange between the coolant (sodium) and the stationary part of the structure. The natural circulation is a reliable cooling method for nuclear reactors. Orig. art. has: 2 figures.

ASSOCIATION: none

SUBMITTED: 03Oct63 ENCL: 00

SUB CODE: NP NO REF SOV: 003 OTHER: 000

Card

APPROVED FOR RELEASE: 06/15/2000 CIA-RDP86-00513R001343730007-

"APPROVED FOR RELEASE: 06/15/2000 CIA-RDP86-00513R001343730007-3

39920

27.1140

S/219/62/053/006/001/003
I015/I215

AUTHOR: Pyshina, S. P.

TITLE: The effect of conditioned stimuli of varying duration on the increase in function of cortical cells

PERIODICAL: Byulleten' eksperimental'noy biologii i meditsiny, v. 53, no. 6, 1962, 3-6

TEXT: It has been previously shown that stimuli of short duration, when applied over a long period decrease the function of cortical cells. Experiments were now carried out on 4 dogs aged 6-8 years, in 7 series, each lasting 10-14 days. Stable, positive conditioned reflexes to sound, light, and metronome, had been elaborated prior to the experiment. A meat-bread powder was used as a non-conditioned stimulus. The cortical cell function increased following an alteration in the stimulation time, whereas repeated stimulations of identical duration caused a decrease in this function. Among factors affecting the increase in the cortical cell function were the "nervous characteristics" of the animal, the initial level of conditioned reflexe activity and the phase during which the shift in the duration of the stimulation occurred. Variations in stimulation time, increase the cortical cell function even at principally identical activities. There are 2 tables.

ASSOCIATION: Kafedra normal'noy fiziologii (zav.-prof. A. V. Kibyakov) I Leningradskogo meditsinskogo instituta imeni I. P. Pavlova (Chair of Normal Physiology — Dir. Prof. A. V. Kibyakov. — 1st Leningrad Medical Institute imeni I. P. Pavlov)

SUBMITTED: June 14, 1961

Card 1/1

APPROVED FOR RELEASE: 06/15/2000 CIA-RDP86-00513R001343730007-3"

"APPROVED FOR RELEASE: 06/15/2000 CIA-RDP86-00513R001343730007-3

PYSHINA, S.P.

Conditioned reflex reproduction of a form of the course of the process of cortical excitation. Zhur. vys. nerv. deiat. 11 no.4:665-668 Jl-Ag '61. (MIRA 15:2)

1. Chair of Normal Physiology, Pavlov Medical Institute, Leningrad.
(CONDITIONED RESPONSE)

APPROVED FOR RELEASE: 06/15/2000 CIA-RDP86-00513R001343730007-3"

"APPROVED FOR RELEASE: 06/15/2000 CIA-RDP86-00513R001343730007-3

PYSHINA, S.P.

Interrelation of trace neural processes of excitation and inhibition during brief action of conditioned stimuli. Zhur. vys. nerv.deiat. 11 no.5:902-907 S-O '61. (MIRA 15:1)

1. Chair of Normal Physiology, Pavlov Medical Institute, Leningrad.
(CONDITIONED RESPONSE)

APPROVED FOR RELEASE: 06/15/2000 CIA-RDP86-00513R001343730007-3"

"APPROVED FOR RELEASE: 06/15/2000 CIA-RDP86-00513R001343730007-3

PYSHINA, S.P.

Mechanism of action of a brief conditioned stimulus. Zhur.vys.nerv. deiat. 10 no.6:861-863 N-D '60. (MIRA 14:1)

1. Kafedra normal'noy fiziologii Leningradskogo meditsinskogo instituta im. I.P.Pavlova.

(CONDITIONED RESPONSE)

APPROVED FOR RELEASE: 06/15/2000 CIA-RDP86-00513R001343730007-3"

"APPROVED FOR RELEASE: 06/15/2000 CIA-RDP86-00513R001343730007-3

PYSHINA, S.P.

KUPALOV, P.S.; PYSHINA, S.P.

Tonus reflexes of the spinal cord. Fiziol. zh. SSSR 37 no.6:713-717 Nov-Dec 51. (CIML 21:4)

1. Department of Physiology, First Leningrad Medical Institute imeni I.P. Pavlov.

APPROVED FOR RELEASE: 06/15/2000 CIA-RDP86-00513R001343730007-3"

"APPROVED FOR RELEASE: 06/15/2000 CIA-RDP86-00513R001343730007-3

PYSHINA, S.P.

1

Action of corticotropin on central nervous activity of dogs. S. P. Pyshina (I.P. Pavlov Med. Inst., Leningrad). *Fiziol. Zhur. S.S.S.R.* 42, 931-8(1956).—The hormone injected into dogs at 1 unit per 2-10 kg. stimulates the active processes in the cortex; prolonged administration leads to overstimulation of cortical cells and development of a block; gradually increasing dosage produces temporary brief periods of stimulation. Differential block is not affected. The hormone has prolonged action for several days.

G. M. Kosolapoff

filed

APPROVED FOR RELEASE: 06/15/2000 CIA-RDP86-00513R001343730007-3"

"APPROVED FOR RELEASE: 06/15/2000 CIA-RDP86-00513R001343730007-3

PYSHINA, S.P.

Action of ACTH on the higher nervous activity in dogs [with summary in English]. Fiziol.zhur. 42 no.11:931-938 N '56. (MLRA 10:1)

1. Kafedra normal'noy fiziologii Meditsinskogo instituta im. akad. I.P.Pavlova, Leningrad.
(REFLEX, CONDITIONED,
eff. of ACTH in dogs (Rus))
(ACTH, effects,
on conditioned reflex funct. indogs (Rus))

APPROVED FOR RELEASE: 06/15/2000 CIA-RDP86-00513R001343730007-3"

"APPROVED FOR RELEASE: 06/15/2000 CIA-RDP86-00513R001343730007-3

PYSHINA, S. P.

USSR/Medicine - Nervous System Physiology
Medicine - Hypoglycemia

Nov/Dec 48

"Disturbances of the Higher Nervous System Due to Induced Insulin Hypoglycemia, Report No I," V. G. Baranov, S. P. Pyshina, Ye. N. Speranskaya, Lab of Endocrinol, Inst of Experimental Med, Leningrad, 7¼ pp

"Fiziol Zhur SSSR" Vol XXXIV, No 6

Experimental data showed: (1) Pronounced, but brief hypoglycemia led to regular two-phase changes in the cerebral cortex. (2) On day of recovery from severe hypoglycemia, all conditioned reflexes disappeared but returned through two (subnormal and above normal) phases, 8-10 days in duration. (3) Analogous conditions were of shorter duration in milder hypoglycemia with corresponding periods of reduced reflex action.

61/49T47

APPROVED FOR RELEASE: 06/15/2000 CIA-RDP86-00513R001343730007-3"

"APPROVED FOR RELEASE: 06/15/2000 CIA-RDP86-00513R001343730007-3

PYSHINA, S. P.

USSR/Medicine - Nervous System - Physiology
Medicine - Hypoglycemia

Nov/Dec 48

"Disturbances of the Higher Nervous System Due to Induced Insulin Hypoglycemia, Report No II," V. G. Baranov, S. P. Pyshina, Ye. N. Speranskaya, Lab of Endocrinol, Inst of Evolutionary Physical and Path of Higher Nervous Syst imeni Acad I. P. Pavlov, Lab of Endocrinol Inst of Experimental Med, Acad Med Sci USSR, 7½ pp

"Fiziol Zhur SSSR" Vol XXXIV, No 6

In these experiments, one or several small doses in several days produced a mild degree of hypoglycemia without external symptoms. Sugar content curves indicated the intensity of these conditions. Role of sympathetic nerve system in changes in the cerebral system due to hypoglycemia is only one link in a chain of physiological disturbances.

61/49T48

APPROVED FOR RELEASE: 06/15/2000 CIA-RDP86-00513R001343730007-3"

"APPROVED FOR RELEASE: 06/15/2000 CIA-RDP86-00513R001343730007-3

KUPALOV, P.S., PYSHINA, S.P.

Spinal Cord

Tonus reflexes of the spinal cord. Fiziol.zhur. 37, no. 6, 1951.

MONTHLY LIST OF RUSSIAN ACCESSIONS, LIBRARY OF CONGRESS, APRIL 1952. UNCLASSIFIED.

APPROVED FOR RELEASE: 06/15/2000 CIA-RDP86-00513R001343730007-3"

"APPROVED FOR RELEASE: 06/15/2000 CIA-RDP86-00513R001343730007-3

USSR/Medicine - Physiology FD-2701

Card 1/1 Pub. 33-10/28

Author : Pyshina, S. P.

Title : The effect of $CaCl_2$ and KCl on the tonic spinal reflexes of frogs

Periodical : Fiziol. zhur. 41, 64-70, Jan-Feb 1955

Abstract : Investigated changes in the tonic spinal reflexes of decerebrized frogs resulting from changes in the physiological state of the spinal cord produced by administration of $CaCl_2$ and KCl. Kymograms. Four references, all USSR (1 since 1940).

Institution : Chair of Normal Physiology, I Leningrad Medical Institute imeni Acad. I. P. Pavlov

Submitted : July 4, 1952

APPROVED FOR RELEASE: 06/15/2000 CIA-RDP86-00513R001343730007-3"

"APPROVED FOR RELEASE: 06/15/2000 CIA-RDP86-00513R001343730007-3

PYSHINA, Z.S.; MEYENSALU, E.R. [Meensalu, E.], starshiy agronom

On demonstration farms. Zashch. rast. ot vred. i bol. 7 no.1:12 '62. (MIRA 15:6)

1. Zaveduyushchaya otdelom zashchity rasteniy Tambovskoy opytnoy sel'skokhozyaystvennoy stantsii (for Pyshina). 2. Oporno-pokazatel'nyy sovkhoz "Nyaetaguse" zony goroda Kokhtla-Yarve Estonskoy SSR i Respublikanskaya stantsiya zashchity rasteniy (for Meyensalu).
(Plants, Protection of)

APPROVED FOR RELEASE: 06/15/2000 CIA-RDP86-00513R001343730007-3"

"APPROVED FOR RELEASE: 06/15/2000 CIA-RDP86-00513R001343730007-3

PYSHKALO, A.M. (Moskva)

New educational motion pictures on mathematics. Mat. v shkole no.3:88-90 My-Je '62. (MIRA 15:7)
(Mathematics--Study and teaching)
(Motion pictures in education)

APPROVED FOR RELEASE: 06/15/2000 CIA-RDP86-00513R001343730007-3"

"APPROVED FOR RELEASE: 06/15/2000 CIA-RDP86-00513R001343730007-3

PYSHKALO, A.M. (Moskva)

Educational motion picture "Cartesian coordinate system and the simplest diagrams." Mat. v shkole no.1:86-87 Ja-F '63. (MIRA 16:6)

(Algebra--Audio-visual aids) (Motion pictures in education)

APPROVED FOR RELEASE: 06/15/2000 CIA-RDP86-00513R001343730007-3"

"APPROVED FOR RELEASE: 06/15/2000 CIA-RDP86-00513R001343730007-3

MANTUROV, Oleg Vasil'yevich; SOLNTSEV Yuriy Konstantinovich; SORKIN, Yuriy Isaakovich; FEDIN, Nikolay Georgiyevich; PUL'KIN, S.P., doktor fiz.-mat. nauk, retsenzent; KONDRAT'YEV, V.A., kand. fiz.-mat. nauk, retsenzent; MISHIN, V.I., kand. ped. nauk, retsenzent; VEYTSMAN, I.B., prepodavatel', retsenzent; KREYDLIN, Ye.G., prepodavatel', retsenzent; PYSHKALO, A.M., prepodavatel', retsenzent; DITKIN, V.A., prof., red.; YAKOVKIN, M.V., red.

[Explanatory dictionary of mathematical terms; textbook for teachers] Tolkovyi slovar' matematicheskikh terminov; posobie dlia uchitelei. Moskva, Prosveshchenie, 1965. 539 p. (MIRA 18:7)

APPROVED FOR RELEASE: 06/15/2000 CIA-RDP86-00513R001343730007-3"