"APPROVED FOR RELEASE: 03/14/2001 CIA-RDP86-00513R001344010013-4

L 48832-65

ACCESSION NR: AP5005815

cedure is described briefly. The results are illustrated in Figs. 1 and 2 of the Enclosure. The correspondence between the experimental data and theoretical calculations based on the nature of the crystal lattice of the uranium and of the sulfides is discussed and is found to be satisfactory. The general conclusion is that while in solution the uranium is hexavalent, and the decrease in the total concentration of the uranium with increasing temperature is due to a more complete reduction of the hexavalent uranium and a decrease in the ratio of hexa- to tetravalent uranium. In spite of the title, no pressure dependence is discussed. Orig. art. has: 2 figures.

ASSOCIATION: None

SUBMITTED: 04May64 ENCL: 02 SUB CODE: MM, IC

NR REF SOV: 004 OTHER: 001

Card 2/4

APPROVED FOR RELEASE: 03/14/2001 CIA-RDP86-00513R001344010013-4"

"APPROVED FOR RELEASE: 03/14/2001 CIA-RDP86-00513R001344010013-4

OSIPOV, B.C.; [illegible], R.I.

Some data on stability in the systems $MeS(MeS_2) - VO_2SO_4 - H_2O$ at elevated temperatures and pressures. Atom. energ. 18 no.2: 189-191 F '65. (MIRA 18:3)

APPROVED FOR RELEASE: 03/14/2001 CIA-RDP86-00513R001344010013-4"

"APPROVED FOR RELEASE: 03/14/2001 CIA-RDP86-00513R001344010013-4

L 18937-65 EWT(m)/EPF(n)-2/EWP(t)/EWP(b) Pu-4 IJP(c)/AEDC(a) JD/JG/WW/ES

ACCESSION NR: AP5003162 S/0078/64/009/009/2222/2230

AUTHOR: Vlasov, A. D.; Rafal'skiy, R. P. B

TITLE: Study of the system UO_2SO_4-S-H_2O-(SiO_2) at high temperature and pressures

SOURCE: Zhurnal neorganicheskoy khimii, v. 9, no. 9, 1964, 2222-2230

TOPIC TAGS: uranium, uranium compound, sulfur compound, high temperature effect, pressure effect 27

ABSTRACT: The authors studied the relationship of equilibrium concentrations to temperature and initial concentration for hexavalent uranium. The concentrations of uranium decrease with rising temperature: abruptly at 100-200°, and smoothly at $T > 200°$. As initial concentrations increase, the equilibrium concentrations also increase. This rise is less pronounced at high temperatures.

In the system H_2SO_4-UO_2-S-H_2O at 200°, the concentrations of uranium in solution are close to the corresponding equilibrium concentrations in the system UO_2SO_4-S-H_2O (for the same molalities of H_2SO_4 and UO_2SO_4). The identity of these systems was thus experimentally demonstrated.

Using an analysis of the relations $c = f(c_0)$, the authors set up equations for the reactions taking place in the system UO_2SO_4-S-H_2O at 100,

Card 1/2

APPROVED FOR RELEASE: 03/14/2001 CIA-RDP86-00513R001344010013-4"

"APPROVED FOR RELEASE: 03/14/2001 CIA-RDP86-00513R001344010013-4

L 18937-65
ACCESSION NR: AP5003162

150, and 200°. The equilibrium constants and changes in free energy of these reactions were calculated for 150 and 200°.

The composition of the reaction products in the system UO_2SO_4-S-H_2O changes with rising temperature from 80 at 100° to polythionic acids or other high-oxygen compounds of sulfur at 360°, i.e., toward the formation of sulfur of higher valency states. Orig. art. has: 1 figure, 6 formulas, 9 graphs, 3 tables.

ASSOCIATION: none

SUBMITTED: 18Apr63 ENCL: 00 SUB CODE: IC, GC

NO REF SOV: 003 OTHER: 003 JPRS

Card 2/2

APPROVED FOR RELEASE: 03/14/2001 CIA-RDP86-00513R001344010013-4"

"APPROVED FOR RELEASE: 03/14/2001 CIA-RDP86-00513R001344010013-4

RAFAL'SKIY, R.P.

Transportation and sedimentation of uranium by hydrothermal solutions and the role of complex formation in these processes. Geokhimiia no.5:512-514 My '63. (MIRA 16:7)

(Uranium ores)

APPROVED FOR RELEASE: 03/14/2001 CIA-RDP86-00513R001344010013-4"

"APPROVED FOR RELEASE: 03/14/2001 CIA-RDP86-00513R001344010013-4

RAFAL'SKIY, R.P.; VLASOV, A.D.; NIKOL'SKAYA, I.V.

Possibility for the synchronous transport of U^{VI} and S by hydrothermal solutions (based on experimental data). Dokl. AN SSSR 151 no.2: 432-434 Jl '63. (MIRA 16:7)

1. Predstavleno akademikom D.S.Korzhinskim.
(Uranium) (Sulfur)
(Geochemistry)

APPROVED FOR RELEASE: 03/14/2001 CIA-RDP86-00513R001344010013-4"

"APPROVED FOR RELEASE: 03/14/2001 CIA-RDP86-00513R001344010013-4

RAFAL'SKIY, R.P.; KUDINOVA, K.F.

Experimental study of the deposition of uranium oxides from hydrothermal solutions. Geol.rud.mestorozh. no.6:46-53 N-D '62. (MIRA 15:12)

(Uranium oxides)

APPROVED FOR RELEASE: 03/14/2001 CIA-RDP86-00513R001344010013-4"

"APPROVED FOR RELEASE: 03/14/2001 CIA-RDP86-00513R001344010013-4

RAFAL'SKIY, R.P.; VLASOV, A.D.; KUDINOVA, K.F.

Synthesis of UO_2 by the reduction of hexavalent uranium by elementary sulfur under hydrothermal conditions. Atom. energ. 13 no.2:181-183 Ag '62. (MIRA 15:8)
(Uranium oxide crystals—Growth)

APPROVED FOR RELEASE: 03/14/2001 CIA-RDP86-00513R001344010013-4"

"APPROVED FOR RELEASE: 03/14/2001 CIA-RDP86-00513R001344010013-4

S/089/62/013/002/008/011
B102/B104

AUTHORS: Rafal'skiy, R. P., Vlasov, A. D., Kudinova, K. F.

TITLE: UO_2 synthesis by U(VI) reduction with elementary sulfur under hydrothermal conditions

PERIODICAL: Atomnaya energiya, v. 13, no. 2, 1962, 181-183

TEXT: U(VI) U(IV) reduction in uranyl sulfate solutions by sulfur vapor is described. Altogether 13 experiments were made under various conditions, and in particular with different periods of heating, at a molar ratio U:S = 1:1. The sulfur vapor pressure corresponded to the vapor saturation pressure. The heating temperatures in the autoclave were 360°C, or in 2 cases 200°C, and the heating periods varied between 1 and 72 hrs. U-concentration in the initial solution was 25, or in one case 100 g/l; pH was 2.3 (or in individual cases 0.5, 1.7, 0.8); the solution volume was 20-50 ml (3.5, 9); and the uranium concentration in the final solution was between 0.001 and 18.5 g/l. In all cases the synthesis products were studied using X-rays. It is shown that U(VI)-S interaction at 360°C during 20 hrs and more causes virtually complete uranium reduction (25 g/l

Card 1/2

APPROVED FOR RELEASE: 03/14/2001 CIA-RDP86-00513R001344010013-4"

"APPROVED FOR RELEASE: 03/14/2001 CIA-RDP86-00513R001344010013-4

solution volume 22 ml, pH 2.3). With heating periods of 1 and 4 hrs (360°C) (25 g/l, pH 2.3, volume of solution 21 and 9 ml) a precipitate of $UO_2 + U_3O_8$ was observed only at t ≥ 14 hrs, and with 22-25 ml pure UO_2 was precipitated. At 200°C reduction proceeds more slowly is less complete. UO_2 precipitates in finely crystalline form (size 0.01 mm, lattice constant 5.45-5.46) U_3O_8, somewhat more coarsely crystalline at 200°C (0.01-0.2 mm). There are 2 figures and 1 table.

SUBMITTED: November 28, 1961

APPROVED FOR RELEASE: 03/14/2001 CIA-RDP86-00513R001344010013-4"

"APPROVED FOR RELEASE: 03/14/2001 CIA-RDP86-00513R001344010013-4

RAFAL'SKIY, Roman Parfen'yevich; VARGANOVA, A.N., red.; VLASOVA, N.A., tekhn. red.

[Physicochemical investigation of the conditions governing the formation of uranium ores] Fiziko-khimicheskoe issledovanie uslovii obrazovaniia uranovykh rud. Moskva, Gosatomizdat 1963. 146 p. (MIRA 17:3)

APPROVED FOR RELEASE: 03/14/2001 CIA-RDP86-00513R001344010013-4"

"APPROVED FOR RELEASE: 03/14/2001 CIA-RDP86-00513R001344010013-4

RAFAL'SKIY, Roman Parfen'yevich; VARGANOVA, A.N., red.; VLASOVA, N.A., tekhn. red.

[Physicochemical investigation of the conditions of uranium ore formation] Fiziko-khimicheskoe issledovanie uslovii obrazovaniia uranovykh rud. Moskva, Gosatomizdat, 1963. 146 p. (MIRA 17:2)

APPROVED FOR RELEASE: 03/14/2001 CIA-RDP86-00513R001344010013-4"

"APPROVED FOR RELEASE: 03/14/2001 CIA-RDP86-00513R001344010013-4

RAFAL'SKIY, V.

Specialized manufacture of fastenings. NTO 5 no.2:31-34 F '63. (MIRA 16:3)

1. Predsedatel' soveta pervichnoy organizatsii Nauchno-tekhnicheskogo obshchestva moskovoskogo zavoda "Stankonormal'".
(Fastenings)

APPROVED FOR RELEASE: 03/14/2001 CIA-RDP86-00513R001344010013-4"

"APPROVED FOR RELEASE: 03/14/2001 CIA-RDP86-00513R001344010013-4

RAFALSKI, W

SCIENCE

PERIODICAL: ROCZNIKI CHEMII, Vol. 31, No. 2, 1957

RAFALSKI, W. Preparation of metallic thorium in compact form by electrolysis of fused salts. p. 741.

MOnthly List of East European Access ons (EEAI) LC Vol. 8, No4
April 1959, Unclass

APPROVED FOR RELEASE: 03/14/2001 CIA-RDP86-00513R001344010013-4"

"APPROVED FOR RELEASE: 03/14/2001 CIA-RDP86-00513R001344010013-4

B-12

COUNTRY : Poland
CATEGORY : Physical Chemistry. Electrochemistry.

ABS. JOUR. : RZKhim., No. 16 1959, No. 56542

AUTHOR : Rafalski, W.
INST. : Not given
TITLE : The Effect of Temperature on the Critical Current Density in $PbCl_2$, $SnCl_2$, and AgCl Melts

ORIG. PUB. : Roczniki Chem, 32, No 4, 905-911 (1958)

ABSTRACT : The onset of the anodic effect on a graphite electrode was recorded oscillographically. It has been found that the critical current density (in amps/cm^2) has the following values (read from the graphs presented in the paper): for $PbCl_2$, 4.1 at 500°, passing through a maximum of about 4.5 at about 620° and falling to about 2.2 at 850°; for $SnCl_2$, 17 at 300°, about 17.4 at 350°, and decreasing to 5.5 at 600°; for AgCl the critical current density falls immediately

CARD: 1/2

APPROVED FOR RELEASE: 03/14/2001 CIA-RDP86-00513R001344010013-4"

"APPROVED FOR RELEASE: 03/14/2001 CIA-RDP86-00513R001344010013-4

82708

P/046/60/005/001-2/002/008
A222/A026

21.3100
5.2200

AUTHOR: Minc, Stefan; Rafalski, Wadim

TITLE: Production of Compact Metallic Thorium by Means of Fuse Salt Electrolysis

PERIODICAL: Nukleonika, 1960, No. 1-2, pp. 47-54.

TEXT: The authors describe an experiment in which they produced solid metallic thorium by means of electrolysis of molten salts in a bath containing 0.4n ThF_4, 0.5n CaF_2 at a temperature of about 1,100°C and a current density of about 650 a per square decimeter. As indicated in the introduction, electrolysis of salts according to Driggs and Liliendahl (Ref. 5, 6) yields powderized metal. Latest research has shown the practicability of thorium reduction from halogen compounds dissolved in a mixture of alkali metal halogens. In order to examine the ways of solid thorium production, the authors electrolyzed a molten mixture of thorium, calcium and zinc salts. Calcium salt was used for the considerable heat of reduction of calcium. The test equipment consisted of an airtight steel tank with a graphite crucible placed on the bottom and serving as the

4

Card 1/3

APPROVED FOR RELEASE: 03/14/2001 CIA-RDP86-00513R001344010013-4"

"APPROVED FOR RELEASE: 03/14/2001 CIA-RDP86-00513R001344010013-4

82708

P/046/60/005/001-2/002/008
A222/A026

Production of Compact Metallic Thorium by Means of Fuse Salt Electrolysis

anode. A concentrical molybdenum rod, 6 mm in diameter, constituted the cathode. The tank was placed in a vertical silit (silicon carbide) furnace heated by a temperature-controlled ($\pm 20^{o}C$) transformer. Argon, purified from oxygen, nitrogen, and humidity, was forced through the tank during electrolysis. Fig. 1 shows a cross section of the steel tank; the electrical wiring system is shown in Fig. 2. Electrolysis was performed by means of direct current from a selenium rectifier. The use of electrolyte I (0.4n ThF_4, 0.5n $CaCl_2$ and 0.1n $ZnCl_2$) at a temperature lower than the boiling point of $ZnCl_2$ resulted in a powder deposit. The first nugget of solid metal along with metallic powder was obtained at a temperature of $900^{o}C$, or higher than the boiling point of $ZnCl_2$, at a current density of about 600 a/10 cm^2. Electrolyte II consisted of 0.4n ThF_4, 0.5n CaF_2 and 0.1n ZnF_2. The optimum temperature and current density, required to produce solid metal on the cathode as established in a sequence of tests, was about $1,100^{o}C$ and about 650 a/10 cm^2 respectively. Solid thorium obtained under these conditions from electrolyte II had a specific density of 11.1 gr/cm^3 and the chemical composition 94.4% Th, 2.7% Fe and Al and a number of other elements, with traces only of Zn.

Card 2/3

APPROVED FOR RELEASE: 03/14/2001 CIA-RDP86-00513R001344010013-4"

"APPROVED FOR RELEASE: 03/14/2001 CIA-RDP86-00513R001344010013-4

82708

P/046/60/005/001-2/002/008
A222/A026

Production of Compact Metallic Thorium by Means of Fuse Salt Electrolysis

Impurities originated from the crucible, tank and salts. There are 6 figures and 9 references: 3 Soviet, 3 English, 2 German and 1 Polish.

ASSOCIATION: Zakład Elektrochemii i Korozji Uniwersytetu Warszawskiego (Department of Electrochemistry and Corrosion, Warsaw University)
Zakład Elektrochemii Instytutu Chemii Fizycznej PAN (Department of Electrochemistry, Institute of Physical Chemistry, Polish Academy of Sciences)

SUBMITTED: November 1959

Card 3/3

APPROVED FOR RELEASE: 03/14/2001 CIA-RDP86-00513R001344010013-4"

"APPROVED FOR RELEASE: 03/14/2001 CIA-RDP86-00513R001344010013-4

RAFALSKI, WADIM

Distr: 4E2c(m)/4E3c 2 cys

Preparation of solid metallic thorium by electrolysis of fused salts. Stefan Minc and Wadim Rafalski (Univ. Warsaw). *Nukleonika* 5, 47-53(1960).—Electrolysis of a fused mixt. of ThF_4, CaF_2, and ZnF_2, 0.4, 0.5, and 0.1*N*, resp., with a graphite anode and a Mo-rod cathode, at ~1100° and 650 amp./sq. dm., gave after 15 min. a solid coat of metallic Th of 94.4% purity, contg. 2.7% Fe. Probably Th was reduced by deposited Ca and a Th-Zn alloy was deposited and subsequently decompd., the amt. of heat generated at the cathode being adequate to fuse the alloy and cause sublimation of Zn. Electrolysis with $CaCl_2$ and $ZnCl_2$ gave powd. Th. J. Stecki

MIK

APPROVED FOR RELEASE: 03/14/2001 CIA-RDP86-00513R001344010013-4"

"APPROVED FOR RELEASE: 03/14/2001 CIA-RDP86-00513R001344010013-4

RAFAL'SKI, Vadim, [Rafalski, W.]; MINTS, Stefan [Minc, S.]

The mechanism of cathode process in the preparation of thorium-zinc alloys in fused salts. I. The systems ThF_4 and ThF_4-CaF_2. Nukleonika 7 no.1:13-23 '62.

1. Polskaya Akademya Nauk, Institut yadernykh isseledovaniy, Varshava.

APPROVED FOR RELEASE: 03/14/2001 CIA-RDP86-00513R001344010013-4"

"APPROVED FOR RELEASE: 03/14/2001 CIA-RDP86-00513R001344010013-4

RAFALSKI, Wadim; MINC, Stefan

Mechanism of the cathode process in the preparation of thorium-zinc alloys in fused salts. II. Research on ZnF_2. Nukleonika 7 no.2:95-100 '62.

1. Institute of Nuclear Research, Polish Academy of Sciences, Warsaw.

APPROVED FOR RELEASE: 03/14/2001 CIA-RDP86-00513R001344010013-4"

"APPROVED FOR RELEASE: 03/14/2001 CIA-RDP86-00513R001344010013-4

RAFALSKI, Vadim (Rafalski, Wadim); MINTS, Stefan (Minc, Stefan)

Mechanism of the cathode process in obtaining thorium-zinc alloys in fused salts. III. Electronic conductance in fused salts. Nukleonika 7 no.3 161-168 '62.

1. Institut yadernikh issledovaniy, PAN, Varshava.

APPROVED FOR RELEASE: 03/14/2001 CIA-RDP86-00513R001344010013-4"

"APPROVED FOR RELEASE: 03/14/2001 CIA-RDP86-00513R001344010013-4

S/081/62/000/023/015/120
B156/B186

AUTHORS: Mints, S., Rafal'ski, V.

TITLE: Kinetics of the process at the cathode when thorium is being separated out of molten salts. Part I. Investigation of ThF_4 and ThF_4-CaF_2

PERIODICAL: Referativnyy zhurnal. Khimiya, no. 23, 1962, 109, abstract 23B806 (Rept. Inst. badań jądrow. PAN, no. 267, 1961 17pp., illust. [summaries in Pol. and Russ.])

TEXT: Voltage-current and voltage-time curves were plotted from recordings made in molten ThF_4 (I), and in a molten mixture of 45 mol% I + 55 mol% CaF_2, at 1100 - 1120°C. The anode was the graphite crucible, the cathode a rod of Mo. Three reduction potentials were found for the molten I: the first (V_1 = 1.91 v) corresponds to the reduction of ThO_2 oxygen compounds, the second (V_2 = 2.5 v) to the conversion of I into ThF_2, and the third (V_3 = 2.95 v) is the potential at which Th separates out from I. In the

Card 1/2

APPROVED FOR RELEASE: 03/14/2001 CIA-RDP86-00513R001344010013-4"

"APPROVED FOR RELEASE: 03/14/2001 CIA-RDP86-00513R001344010013-4

case of the molten I-CaF_2 mixtures, there is an additional potential for the dissociation of CaF_2, equal to 3.9 v. When currents were passed through the molten substances, n-type conductivity was observed. [Abstracter's note: Complete translation.]

APPROVED FOR RELEASE: 03/14/2001 CIA-RDP86-00513R001344010013-4"

"APPROVED FOR RELEASE: 03/14/2001 CIA-RDP86-00513R001344010013-4

S/081/63/000/002/011/088
B193/B102

AUTHORS: Rafal'ski, Vadim, Mints, Stefan

TITLE: Kinetics of the cathodic process when separating thorium from fused salts. Part II. Investigation of ZnF_2

PERIODICAL: Referativnyy zhurnal. Khimiya, no. 2, 1963, 88, abstract 2B550 (Rept. Inst. badań jadrow. PAN, no. 280, W, 9pp. illust. [summaries in Pol. and Ger.])

TEXT: The decomposition voltage (DV) was measured in melts containing 36.7 - 42.5% ThF_4, 45.3 - 52.5% CaF_2 and 5 - 18% ZnF_2. At 1100°C DV = =1.2 ± 0.1 v for ZnF_2. In the measurements the voltage drop in the electrolyte was not taken into account. The temperature of the experiments exceeded the boiling point of Zn, and it is suggested in this connection that the Zn deposited on the cathode vaporized and stable cathode polarization was not reached. For Commun. I cf. RZhKhim, 1962, 23B806. [Abstracter's note: Complete translation.]

Card 1/1

APPROVED FOR RELEASE: 03/14/2001 CIA-RDP86-00513R001344010013-4"

"APPROVED FOR RELEASE: 03/14/2001 CIA-RDP86-00513R001344010013-4

RAFAL'SKI, Vadim [Rafalski, Wadim]; MINTS, Stefan [Minc, Stefan]

Mechanism of the cathode process in preparing thorium-zinc alloys in fused salts. Pt. 4. Nukleonika 8 no.1:41-55 '63.

1. Institut yadernikh issledovaniy, Varshava 9.

APPROVED FOR RELEASE: 03/14/2001 CIA-RDP86-00513R001344010013-4"

"APPROVED FOR RELEASE: 03/14/2001 CIA-RDP86-00513R001344010013-4

RAZAL'SKIY, V., inzh.

Silver medal of innovator Sumikhin. Inform.biul.VDNKH no.1:16-17 Ja '65. (MIRA 18:3)

1. Moskovskiy zavod "Stankonormal'".

APPROVED FOR RELEASE: 03/14/2001 CIA-RDP86-00513R001344010013-4"

"APPROVED FOR RELEASE: 03/14/2001 CIA-RDP86-00513R001344010013-4

RAFAL'SKIY, V.I.

Program controlled unit for liquid carburizing and hardening of steel parts. Biul.tekh.-ekon.inform.Gos.nauch.-issl.inst. nauch. i tekh.inform. 16 no.11:32-34 '63. (MIRA 16:11)

APPROVED FOR RELEASE: 03/14/2001 CIA-RDP86-00513R001344010013-4"

"APPROVED FOR RELEASE: 03/14/2001 CIA-RDP86-00513R001344010013-4

RAFAL'SKIY, V.I.

Die for swaging squares. Mashinostroitel' no.11:27 N '63. (MIRA 16:11)

APPROVED FOR RELEASE: 03/14/2001 CIA-RDP86-00513R001344010013-4"

"APPROVED FOR RELEASE: 03/14/2001 CIA-RDP86-00513R001344010013-4

RAFAL'SKIY, V.I.

Hydraulic hoist for automatic lines. Mashinostoitel' no.3: 42-43 Mr '63. (MIRA 16:4)

(Hoisting machinery)

APPROVED FOR RELEASE: 03/14/2001 CIA-RDP86-00513R001344010013-4"

"APPROVED FOR RELEASE: 03/14/2001 CIA-RDP86-00513R001344010013-4

RAFAL'SKIY, V.I., inzh.

From the exhibition into production. Inform. biul. VDNKH no.12: 11-15 D '64 (MIRA 18:2)

1. Zavod "Stankonormal'".

APPROVED FOR RELEASE: 03/14/2001 CIA-RDP86-00513R001344010013-4"

"APPROVED FOR RELEASE: 03/14/2001 CIA-RDP86-00513R001344010013-4

RAFAL'SKIY, V.V.

Electric conductivity of the system KCl - $SnCl_2$. Ukr. khim. zhur. 26 no.5:585-587 '60. (MIRA 13:11)

1. Institut yadernykh issledovaniy Pol'skoy AN.
(Potassium chlorids) (Tin chloride)

APPROVED FOR RELEASE: 03/14/2001 CIA-RDP86-00513R001344010013-4"

"APPROVED FOR RELEASE: 03/14/2001 CIA-RDP86-00513R001344010013-4

RAFAL'SKIY, Ya.D. (Leningrad)

Amount of cholesterol, phospholipids, proteins, and lipoprotein fractions in the blood serum of women during the climateric and in climateric neuroses. Probl.endok.i gorm. 7 no.4:82-89 '61. (MIRA 14:8)

1. Iz laboratorii vozrastnoy fiziologii i patologii cheloveka (zav. - prof. V.G. Baranov) Instituta fiziologii imeni I.P. Pavlova (dir. - prof. V.N. Chernigovskiy) AN SSSR i endokrinologicheskoy laboratorii (nauchnyy rukovoditel' - prof. V.G. Baranov) Instituta akusherstva i ginekologii (dir. - prof. P.A. Beloshapko) AMN SSSR.

(CHOLESTEROL) (LIPIDS) (BLOOD PROTEINS) (CLIMATERIC) (NERVOUS SYSTEM--DISEASES)

APPROVED FOR RELEASE: 03/14/2001 CIA-RDP86-00513R001344010013-4"

"APPROVED FOR RELEASE: 03/14/2001 CIA-RDP86-00513R001344010013-4

RAFAL'SKIY, Ya. D. (Leningrad)

Effect of small and medium doses of estrogens on lipids, lipoprotein and protein fractions in the blood serum of patients with climacteric neurosis. Probl. endok. i gorm. 8 no.3:52-58 My-Je '62. (MIRA 15:6)

1. Iz laboratorii vozrastnoy fiziologii i patologii cheloveka (zav. - deystvitel'nyy chlen AMN SSSR prof. V. G. Baranov) Instituta fiziologii AN SSSR imeni I. P. Pavlova (dir. - chlen-korrespondent AN SSSR, deystvitel'nyy chlen AMN SSSR prof. V. N. Chernigovskiy) i endokrinologicheskoy laboratorii (nauchnyy rukovoditel' - deystvitel'nyy chlen AMN SSSR prof. V. G. Baranov) Instituta akusherstva i ginekologii AMN SSSR (dir. - chlen-korrespondent AMN SSSR prof. P. A. Beloshapko[deceased])

(ESTROGENS) (CLIMACTERIC) (NEUROSES)
(BLOOD PROTEINS) (LIPID METABOLISM)

APPROVED FOR RELEASE: 03/14/2001 CIA-RDP86-00513R001344010013-4"

"APPROVED FOR RELEASE: 03/14/2001 CIA-RDP86-00513R001344010013-4

NASLEDOVA, I.D.; RAFAL'SKIY, Ya.D. (Leningrad)

Effect of estrogens on the development of experimental atherosclerosis in rabbits of different age. Pat.fiziol. i eksp. terap. 7 no.1:44-48 Ja-F'63. (MIRA 16:10)

1. Iz laboratorii vozrastnoy fiziologii i patologii cheloveka (zav. - deystvitel'nyy chlen AMN SSSR V.G.Baranov) Instituta fiziologii imeni I.P.Pavlova (dir. - akademik V.N.Chernigovskiy) AN SSSR.

(ESTROGEN) (ARTERIOSCLEROSIS)

APPROVED FOR RELEASE: 03/14/2001 CIA-RDP86-00513R001344010013-4"

"APPROVED FOR RELEASE: 03/14/2001 CIA-RDP86-00513R001344010013-4

NASLEDOVA, I.D.; RAFAL'SKIY, Ya.D.

Antiatherogenic activity of cortisone and methylandrostendiol in experimental atherosclerosis in rabbits. Farm. i toks. 27 no.1:32-35 Ja-F '64. (MIRA 17:11)

1. Laboratoriya vozrastnoy fiziologii i patologii cheloveka (zav. - deystvitel'nyy chlen AMN SSSR prof. V.G. Baranov) Instituta fiziologii imeni Pavlova AN SSSR i endokrinologicheskaya laboratoriya (nauchnyy rukovoditel' - deystvitel'nyy chlen AMN SSSR prof. V.G. Baranov) Instituta akusherstva i ginekologii AMN SSSR.

APPROVED FOR RELEASE: 03/14/2001 CIA-RDP86-00513R001344010013-4"

"APPROVED FOR RELEASE: 03/14/2001 CIA-RDP86-00513R001344010013-4

NASLEDOVA, I.D.; RAFAL'SKIY, Ya.D.

Effect of the age factor on the development of experimental atherosclerosis. Biul. eksp. biol. i med. 53 no.5:32-36 My '62. (MIRA 15:7)

1. Iz laboratorii vozrastnoy fiziologii i patologii cheloveka (zav. - deystvitel'nyy chlen AMN SSSR V.G. Baranov) Instituta fiziologii imeni I.P. Pavlova (dir. - akademik V.N. Chernigovskiy) AMN SSSR, Leningrad. Predstavlena deystvitel'nym chlenom AN SSSR V.G. Baranovym.
(ARTERIOSCLEROSIS) (AGE)

APPROVED FOR RELEASE: 03/14/2001 CIA-RDP86-00513R001344010013-4"

"APPROVED FOR RELEASE: 03/14/2001 CIA-RDP86-00513R001344010013-4

MASLENNIKOVA, I.P.; RAFALSKIY, Ya.D.

Effect of prolonged sound and light stimuli on the development of experimental atherosclerosis in female rabbits. Pat. fiziol. i eksp. terap. 8 no.6:73-74 N-D '64. (MIRA 18:6)

1. Institut fiziologii imeni Pavlova (dir. - akademik V.N. Chernigovskiy) AN SSSR i Institut akusherstva i ginekologii (dir. - chlen-korrespondent AMN SSSR prof. M.A. Petrov-Maslakov) AMN SSSR, Leningrad.

APPROVED FOR RELEASE: 03/14/2001 CIA-RDP86-00513R001344010013-4"

"APPROVED FOR RELEASE: 03/14/2001 CIA-RDP86-00513R001344010013-4

BARANOV, V.G., prof.; ARSEN'YEVA, M.G.; RASKIN, A.M.; RAFAL'SKIY, Ya.D.; SAVCHENKO, O.N.; STEPANOV, G.S.; ALIPOV, V.I., red.

[Physiology and pathology of the female climacteric] Fiziologiia i patologiia klimakteriia zhenshchiny. Leningrad, Meditsina, 1965. 269 p. (MIRA 18:9)

1. Deystvitel'nyy chlen AMN SSSR (for Baranov).

APPROVED FOR RELEASE: 03/14/2001 CIA-RDP86-00513R001344010013-4"

"APPROVED FOR RELEASE: 03/14/2001 CIA-RDP86-00513R001344010013-4

PAVALUKIY, YA. P.

Dissertation defended at the Institute of Physiology imeni I. P. Pavlov for the academic degree of Candidate of Medical Sciences:

"Content of Cholesterol, Phospholipides, Protein, and Lipoprotein Fractions in Blood Serum of Women During the Aging Period."

Vestnik Akad Nauk, No. 4, 1963, pp. 110-145

APPROVED FOR RELEASE: 03/14/2001 CIA-RDP86-00513R001344010013-4"

"APPROVED FOR RELEASE: 03/14/2001 CIA-RDP86-00513R001344010013-4

B 7

*499. **Increasing the Durability of Rotor Blades of Boiler Exhaust Fans.** (In Russian.) B. M. Kontorov and I. I. Rafalvich. *Industrial Power* (U.S.S.R.), v. 4, July 1947, p. 10-11.

Outlines results of experiments which led to the development of superior welding-rod compositions for fabrication of the above. Stalinite—a Cr-Mo-Va alloy—was good, but was in short supply. Three other alloys were developed and tested. The most satisfactory contained 5% boron carbide and was found to be 2-2.5 times more durable than Stalinite.

ASM-SLA METALLURGICAL LITERATURE CLASSIFICATION

APPROVED FOR RELEASE: 03/14/2001 CIA-RDP86-00513R001344010013-4"

"APPROVED FOR RELEASE: 03/14/2001 CIA-RDP86-00513R001344010013-4

L 15688-65 EWT(d) Po-4/Pq-4/Pg-4/Pk-4/Pl-4 ASD-3/AFFTC/ESD-3/APGC
ACCESSION NR: AP4047481 S/0120/64/000/005/0157/0161

AUTHOR: Levina, L. Ye.; Men'shikov, M. I.; Pavlenko, V. A.; Rabinovich, I. S.; Rafal'son, A. E.; Tsy*mberov, M. Ya.; Shutov, M. D.

TITLE: New MKh 1101 mass-spectrometric leak detector

SOURCE: Pribory* i tekhnika eksperimenta, no. 5, 1964, 157-161

TOPIC TAGS: leak detector, mass spectrometric leak detector / MKh 1101 leak detector

ABSTRACT: The new MKh 1101 leak detector differs from previous types (PTI-4a and PTI-6) in that it has no oil-vapor pump, uses an oxidation-resistant cathode, and is calibrated by a reference diffusion-type helium leak. Two lobar rotary (Roots) pumps driven by a single motor provide the rough and fine vacuums; the equilibrium vacuum is $(2-5) \times 10^{-4}$ torr. The cathode is stable in operation at pressures up to 1 torr. The leak detector sensitivity is $(1-5) \times 10^{-8}$

Card 1/2

APPROVED FOR RELEASE: 03/14/2001 CIA-RDP86-00513R001344010013-4"

"APPROVED FOR RELEASE: 03/14/2001 CIA-RDP86-00513R001344010013-4

L 15688-65
ACCESSION NR: AP4047481

1mc/sec for helium and 5×10^{-4} 1ms/sec for hydrogen. Setting the detector in operation takes only 10 minutes. Orig. art. has: 6 figures.

ASSOCIATION: SKB Analiticheskogo priborostroyeniya AN SSSR (Special Design Office for Analytical Instruments, AN SSSR)

SUBMITTED: 03Jun63 ENCL: 00

SUB CODE: ME NO REF SOV: 002 OTHER: 000

Card 2/2

APPROVED FOR RELEASE: 03/14/2001 CIA-RDP86-00513R001344010013-4"

"APPROVED FOR RELEASE: 03/14/2001 CIA-RDP86-00513R001344010013-4

L 7757-66 EWT(m)/EPF(c)/EWP(j)/T/ETC(m) RM/WW

ACC NR: AP5023654 SOURCE CODE: UR/0119/65/000/008/0014/0016

AUTHOR: Ozerov, L. N. (Engineer); Rafal'son, A. E. (Engineer)

ORG: none

TITLE: MKh1201 industrial mass-spectrometer gas analyzer

SOURCE: Priborostroyeniye, no. 8, 1965, 14-16

TOPIC TAGS: gas analyzer / MKh1201 gas analyzer

ABSTRACT: The MKh1201 gas analyzer combines a magnetic 180-degree mass spectrometer with an automatic system (a multipositional floating-action controller) that controls internal and external parameters. The analyzer aligns itself according to a program set by the operator, monitors the contents of 8 components of a mixture, and controls the process according to a set ratio of the two-component content to a third-component (basic component) content. The pressure of the test mixture is lowered stepwise from 1 atm down to 10^{-5} torr.

Card 1/2 UDC: 543.51:543.420.62

APPROVED FOR RELEASE: 03/14/2001 CIA-RDP86-00513R001344010013-4"

"APPROVED FOR RELEASE: 03/14/2001 CIA-RDP86-00513R001344010013-4

L 7757-66
ACC NR: AP5023654

The automatic system includes a 24-point recording potentiometer, a synchronous comparison servo, programing devices, synchronizing devices, and a detached control unit. These characteristics of the analyzer are reported: mass measurement range, 12—100 m.u.; resolution, 45; sensitivity by volume, 0.01%; ratio-determination error, ± 2% and ± 8% for nonsorbable and sorbable components, respectively; total 8-component monitoring time, 4 min; power consumption, 2 kva; size, 1.7x1x0.8 m; weight, 500 kg. A number of defects in the operation of the new analyzer have been detected; hence, the analyzer "is being modernized at the present time." Orig. art. has: 3 figures and 10 formulas.

SUB CODE: 13 / SUBM DATE: 00 / ORIG REF: 002

nw

Card 2/2

APPROVED FOR RELEASE: 03/14/2001 CIA-RDP86-00513R001344010013-4"

"APPROVED FOR RELEASE: 03/14/2001 CIA-RDP86-00513R001344010013-4

L 5041-66 FSS-2/EWT(1)/FS(v)-3/FCC/EWA(h)/ETC(m) IJP(c) TT/WW/GW

ACC NR: AP5026057 SOURCE CODE: UR/0293/65/003/005/0768/0781

AUTHOR: Zarkhin, B. I.; Istomin, V. G.; Rafal'son, A. E.; Slutskiy, M. Ye.
44,55 44,55 44,55 44,55

ORG: none

TITLE: Radio frequency mass spectrometer 21,44,55 for the Electron satellites

SOURCE: Kosmicheskiye issledovaniya, v. 3, no. 5, 1965, 768-781

TOPIC TAGS: spectrometer, mass spectrometer, satellite/Electron satellite 12

ABSTRACT: Mass spectrometer data on the ionosphere 12 has to date been obtained mostly at limited altitudes and for constituents with low mass numbers. The Electron satellites have been equipped with new rf mass spectrometers in order to achieve a more complete analysis of particles at altitudes above 1000 km than has yet been reported. The spectrometer, designated MKh-6405, is installed in slightly differing forms on the Electron satellites and is capable of discriminating ionic or neutral particles up to a mass number of 34. An overall view is shown in Fig. 1. An ion source is included for initial calibration. For this purpose, the analyzer is filled with a control mixture of 35% H_2, 35% He, 25% Ne, and 5% Ar at a total pressure of 1×10^{-5} mm Hg. A low-energy electron gun provides the desired ionization of the control mixture.

Card 1/5 UDC: 621.384.8:525.7

APPROVED FOR RELEASE: 03/14/2001 CIA-RDP86-00513R001344010013-4"

"APPROVED FOR RELEASE: 03/14/2001 CIA-RDP86-00513R001344010013-4

L 5041-66

ACC NR: AP5026057

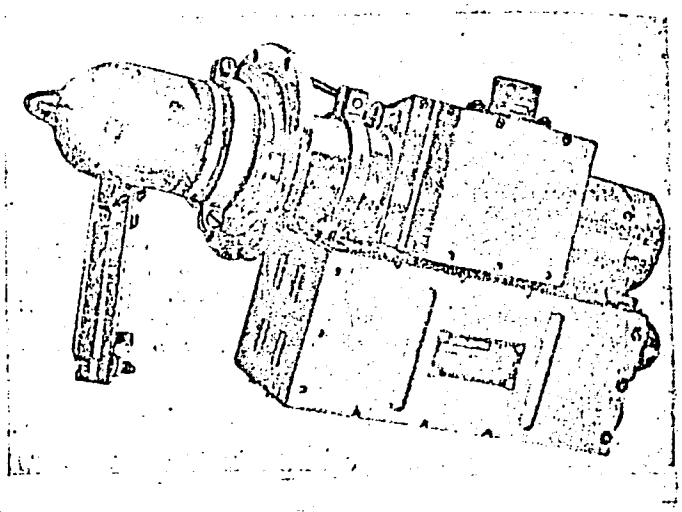

Fig. 1. Overall view of the MKh-6405

In operation, the analyzer envelope is punctured on in-flight command, opening it to the atmosphere. The main features of the analyzer portion are shown in Fig. 2, including the

Card 2/5

APPROVED FOR RELEASE: 03/14/2001 CIA-RDP86-00513R001344010013-4"

"APPROVED FOR RELEASE: 03/14/2001 CIA-RDP86-00513R001344010013-4

L 5041-66

ACC NR: AP5026057

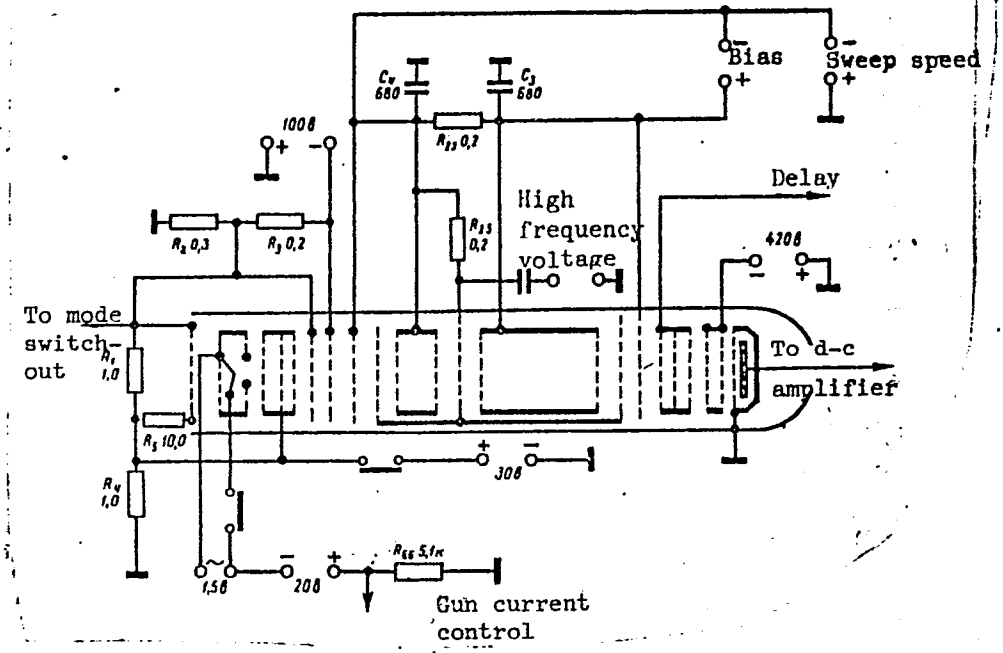

Fig. 2. Analyzer section of the MKh-6405

Card 3/5

APPROVED FOR RELEASE: 03/14/2001 CIA-RDP86-00513R001344010013-4"

"APPROVED FOR RELEASE: 03/14/2001 CIA-RDP86-00513R001344010013-4

L 5041-66

ACC NR: AP5026057

electron gun and accelerating grids. For ion analysis, the gun is switched off, and a potential of -60 v is applied to the input grids; for neutral particle analysis, a potential of +30 v is applied to the grids, thus excluding atmospheric ions. The electronic subassemblies which generate the mass discriminating modes for the analyzer are described; these include an ion current amplifier, high-frequency oscillator, sawtooth sweep generator, switching unit, and a stabilized power supply. Both transistors and ruggedized monolithic subminiature tubes are used. The ion current amplifier provides outputs in three sensitivities, in the ratio of 0.08:1:10, to telemetry channels. Other pertinent specifications of the spectrometer and its analyzer portion are given in the accompanying table.

Spectrometer:

- Mass ranges, 1—2 and 4—34 amu
- Detection sensitivity, average mass ion, 10 ions/cm^3
- Duration of mass range sweep, 3 sec
- Power drain, ion analysis mode, 3 w
- Weight, 2 kg

Analyzer:

- Number of selector stages, 3
- Number of cycles in the stages, 2—7
- Grid spacing, 4 mm
- Grid mesh, 0.4 mm
- Diameter of input port, 25 mm

Card 4/5

APPROVED FOR RELEASE: 03/14/2001 CIA-RDP86-00513R001344010013-4"

"APPROVED FOR RELEASE: 03/14/2001 CIA-RDP86-00513R001344010013-4

L 5041-66

ACC NR: AP5026057

Frequency for the 1—2 amu range, 16.3 Mc
Frequency for the 4—34 amu range, 4.08 Mc
Diameter, 50 mm
Length, 300 mm
Weight, 0.8 kg

Orig. art. has: 2 tables and 11 figures. [SH]

SUB CODE: OP, SV/ SUBM DATE: 02Jun64/ ORIG REF: 012/ OTH REF: 004/ ATD PRESS: 4132

Card 5/5

APPROVED FOR RELEASE: 03/14/2001 CIA-RDP86-00513R001344010013-4"

"APPROVED FOR RELEASE: 03/14/2001 CIA-RDP86-00513R001344010013-4

KUDRYAVTSEV, G.N.; LEVINA, G.N.; LEPEKHINA, V.T.; MARTYNKEVICH, G.M.; OZEROV, L.N.; RAFAL'SON, A.E.

Some characteristics and possibilities of a miniature transit-time mass spectrometer. Trudy TSAO no.61:93-99 '65. (MIRA 18:7)

APPROVED FOR RELEASE: 03/14/2001 CIA-RDP86-00513R001344010013-4"

"APPROVED FOR RELEASE: 03/14/2001 CIA-RDP86-00513R001344010013-4

RAFAL'SON, A.E.

Quadrupole mass-analyzer and its application in chemical and isotope analyses. Zhur. tekh. fiz. 35 no.1:3-13 Ja '65.

(MIRA 18:3)

APPROVED FOR RELEASE: 03/14/2001 CIA-RDP86-00513R001344010013-4"

"APPROVED FOR RELEASE: 03/14/2001 CIA-RDP86-00513R001344010013-4

AVERINA, A.P.; LEVINA, G.N.; LEPEKHINA, V.T.; RAFAL'SON, A.E.

Omegatron mass-spectrometer for analyzing residual gases in high-vaccum systems. Prib. i tekh. eksp. 9 no.2: 121-125 Mr-Ap'64. (MIRA 17:5)

1. Spetsial'noye konstruktorskoye byuro analiticheskogo priborostroyeniya AN SSSR.

APPROVED FOR RELEASE: 03/14/2001 CIA-RDP86-00513R001344010013-4"

"APPROVED FOR RELEASE: 03/14/2001 CIA-RDP86-00513R001344010013-4

ACCESSION NR: AP4003737 S/0293/63/001/002/0287/0295

AUTHOR: Pavlenko, V. A.; Rafal'son, A. E.; Shutov, M. D.

TITLE: Series of small-scale mass spectrometers for the study of neutral and ionized gases of the upper layers of the atmosphere

SOURCE: Kosmicheskiye issledovaniya, v. 1, no. 2, 1963, 287-295

TOPIC TAGS: mass spectrometer, radio frequency mass spectrometer, nonmagnetic mass spectrometer, MKh6401 mass spectrometer, MKh 6403 mass spectrometer, MKh6405 mass spectrometer, upper atmosphere

ABSTRACT: The MKh6401, MKh6403, and MKh6405 mass spectrometers (based on the Bennet model) have been redesigned. The MKh6401 mass spectrometer is used for analyzing the molecular and ionic compositions of gases in a mass range of 1—4 and 12—56 amu. It consists of a miniaturized five-grid analyzer with grid distances fixed by metallic cylinders. A beam of slow electrons emitted by a red-hot cathode ionizes the gases. The analyzer, with the ion source, weighs 2.1 kg and is filled with a mixture of hydrogen, helium, argon, and neon at a pressure of 10^{-5}mm Hg. The MKh6403 mass spectrometer, identical in range to that of the MKh6401,

Card 1/3

APPROVED FOR RELEASE: 03/14/2001 CIA-RDP86-00513R001344010013-4"

"APPROVED FOR RELEASE: 03/14/2001 CIA-RDP86-00513R001344010013-4

ACCESSION NR: AP4003737

permits automatic range shifting. The analyzer, the ion source, and the ion collector are located in a common metallic case. In this model, all the elements of the ion source are in the form of highly transparent grids. The acceleration voltage is from 70 to 380 v, and the frequency automatically shifts from 30 to 8.6 Mc. The MKh6405 mass spectrometer, which contains the basic elements of the MKh6403, is considerably more sensitive than the MKh6403 and is suitable for the analysis of gases containing ionized and neutral particles of 1—2 and 12—36 amu. All three mass spectrometers can work at temperatures ranging from -40 to +40C at low and high humidities and are able to withstand considerable amounts of mechanical overloading. During observations made with the mass spectrometers on 22 June 1959, at altitudes of 90—211 km, the presence of the following ions was recorded: O^+, H_2O^+, NO^+, O_2^+. For purposes of analyzing the neutral components of the upper atmosphere, observations were performed at altitudes higher than 100 km, where the presence of the following were revealed: H, H_2, N, O_1, OH, H_2O, N_2, O_2, Ar, CO_2, and N_2O. Orig. art. has: 6 formulas, 7 figures, and 1 table.

Card 2/3

APPROVED FOR RELEASE: 03/14/2001 CIA-RDP86-00513R001344010013-4"

"APPROVED FOR RELEASE: 03/14/2001 CIA-RDP86-00513R001344010013-4

PAVLENKO, V. A.; OZEROV, L. N.; RAFAL'SON, A. E.; SHUTOV, M. D.

Experimental-production operation of the MKh1201 automatic regulating mass-spectrometer. Zav. lab. 28 no.12:1525-1526 '62. (MIRA 16:1)

1. Spetsial'noye konstruktorskoye byuro analiticheskogo priborostroyeniya AN SSSR.

(Spectrometer)

APPROVED FOR RELEASE: 03/14/2001 CIA-RDP86-00513R001344010013-4"

"APPROVED FOR RELEASE: 03/14/2001 CIA-RDP86-00513R001344010013-4

PENCHKO, Ye.A.; RAFAL'SON, A.E.; TSYMBEROV, M.Ya.

Ionization gauge for the range 1 ÷ 1.10^{-5} torr. Prib. i tekh. eksp. 9 no.1:146-151 Ja-F '64. (MIRA 17:4)

1. Spetsial'noye konstruktorskoye byuro analiticheskogo priborostroyeniya AN SSSR.

APPROVED FOR RELEASE: 03/14/2001 CIA-RDP86-00513R001344010013-4"

"APPROVED FOR RELEASE: 03/14/2001 CIA-RDP86-00513R001344010013-4

PAVLENKO, V.A.; RAFAL'SON, A.E.; TSYMBEROV, M.Ya.; SHUTOV, M.D.

The MKh 1102 high-sensitivity mass-spectrometric leak detector. Prib. i tekh.eksp. 10 no.5:190-194 S-O '65. (MIRA 19:1)

1. Spetsial'noye konstruktorskoye byuro analiticheskogo priborostroyeniya AN SSSR, Leningrad. Submitted Sept.19, 1964.

APPROVED FOR RELEASE: 03/14/2001 CIA-RDP86-00513R001344010013-4"

"APPROVED FOR RELEASE: 03/14/2001 CIA-RDP86-00513R001344010013-4

PAVLENKO, V.A.; RAFAL'SON, A.E.; SHUTOV, M.D.

Series of small-size mass spectrometers for studying the composition of neutral and ionized gases in the upper atmospheric layers. Kosm. issl. 1 no.2:287-295 S-O '63. (MIRA 17:4)

APPROVED FOR RELEASE: 03/14/2001 CIA-RDP86-00513R001344010013-4"

"APPROVED FOR RELEASE: 03/14/2001 CIA-RDP86-00513R001344010013-4

L 34[illegible]-66 [illegible]

ACC NR: AP6019599 SOURCE CODE: UR/0293/66/004/003/0457/0462

AUTHORS: Pavlenko, V. A.; Zarkhin, B. I.; Rafal'son, A. E.; Slutskiy, M. Ye. 54 B

ORG: none

TITLE: High-sensitivity radio-frequency mass spectrometer for investigating the ionic and neutral composition of the upper atmosphere 12

SOURCE: Kosmicheskiye issledovaniya, v. 4, no. 3, 1966, 457-462

TOPIC TAGS: mass spectrometer, upper atmosphere, atmospheric sampling / MKh6407M mass spectrometer

ABSTRACT: An MKh6407M 24 high-sensitivity radio-frequency mass spectrometer 10, intended for analyzing the ionic and neutral composition of the upper atmosphere, is described. The device is characterized by high partial sensitivity, power requirements of 3 w for the ion analysis mode of operation and 5 w for the neutral analysis mode, and small size (2.5 kg). The spectrometer consists of two analyzers, one for the range 1 - 4 amu and the other for 12 - 50 amu, and the electronic unit. The partial sensitivity of the light mass analyzer to H_2 is 3×10^{-11} mm Hg and that of the medium mass analyzer to A is 1×10^{-11} mm Hg. The form of the analyzer is shown in Fig. 1. The basic circuit of the analyzer and a block diagram of the spectrometer are also presented and discussed.

Card 1/2 UDC: 621.384.8:551.535.4

APPROVED FOR RELEASE: 03/14/2001 CIA-RDP86-00513R001344010013-4"

"APPROVED FOR RELEASE: 03/14/2001 CIA-RDP86-00513R001344010013-4

L 24803-66

ACC NR: AP6019599

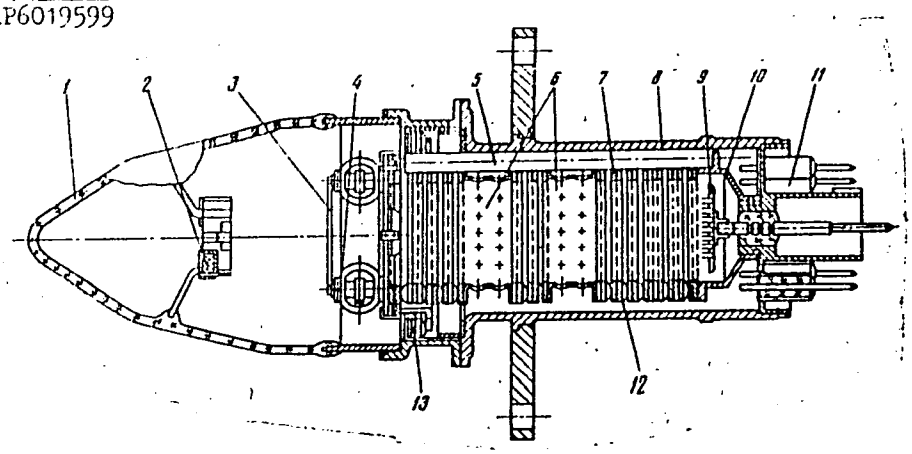

Fig. 1. Analyzer in section. 1 - glass nipple; 2 - getter; 3 - suppressor-grid; 4 - ion source cylinder; 5 - ceramic rod; 6 - drift spaces; 7 - grid; 8 - case; 9 - collector; 10 - collector screen; 11 - base; 12 - packing ring; 13 - securing spring.

Typical spectra are shown, and the basic characteristics of the mass spectrometer are listed. Orig. art. has: 5 figures. [04]

SUB CODE: 04,14/ SUBM DATE: 24Aug65/ ORIG REF: 004/ ATD PRESS: 5030

Card 2/2

APPROVED FOR RELEASE: 03/14/2001 CIA-RDP86-00513R001344010013-4"

"APPROVED FOR RELEASE: 03/14/2001 CIA-RDP86-00513R001344010013-4

L 26976-65

ACCESSION NR: AP5003230

S/0057/65/035/001/0003/0013

AUTHOR: Rafal'son, A.E.

TITLE: The quadrupole mass analyzer and its application to chemical and isotopic analysis

SOURCE: Zhurnal tekhnicheskoy fiziki, v.35, no.1, 1965, 3-13

TOPIC TAGS: mass spectrometer, electrostatic field, quadrupole field, chemical analysis

ABSTRACT: This is a review article concerned with the theory and application of the electrostatic quadrupole mass analyzer (or "mass filter") first described by W.Paul and H.Steinwedel (Zs.Naturforsch.,8,448,1953). The theory of the instrument is briefly derived, and a number of articles are reviewed in which are described applications of the instrument to such diverse problems as chemical analysis, the precise measurement of mass, the determination of residual vapors in high vacuum systems, and the analysis of the upper regions of the atmosphere. The principal characteristics of a number of instruments are tabulated; these instruments range

Card 1/2

APPROVED FOR RELEASE: 03/14/2001 CIA-RDP86-00513R001344010013-4"

"APPROVED FOR RELEASE: 03/14/2001 CIA-RDP86-00513R001344010013-4

L 26976-65

ACCESSION NR: AP5003230

in length from 12.75 cm to 5.82 m and in resolving power from 40 to 20 000. The principal advantages of the quadrupole mass analyzer are its versatility, sensitivity, simplicity of construction, ease of adjustment and the fact that it does not employ a magnetic field. Orig.art.has: 23 formulas, 13 figures and 1 table.

ASSOCIATION: none

SUBMITTED: 20Feb64 ENCL: 00 SUB CODE: NP

NR REF SOV: 000 OTHER: 013

Card 2/2

APPROVED FOR RELEASE: 03/14/2001 CIA-RDP86-00513R001344010013-4"

"APPROVED FOR RELEASE: 03/14/2001 CIA-RDP86-00513R001344010013-4

ACCESSION NR: AP4033128 S/0120/64/000/002/0121/0125

AUTHOR: Averina, A. P.; Levina, G. N.; Lepekhina, V. T.; Rafal'son, A. E.

TITLE: Omegatron mass spectrometer for analyzing residual gas in high-vacuum systems

SOURCE: Pribory* i tekhnika eksperimenta, no. 2, 1964, 121-125

TOPIC TAGS: spectrometer, mass spectrometer, residual gas, high vacuum technique, high vacuum electronic device

ABSTRACT: The development of a new MKh 4301 omegatron mass spectrometer is reported which consists of the following parts: (1) an analyzer; (2) a measuring unit that includes an h-f oscillator, a cathode-ray-tube recording unit, sweep amplifiers, an ion-current amplifier, and a power-supply unit; (3) an electrometric stage of the ion amplifier; (4) a permanent magnet; (5) a permanent-magnet adjuster; and (6) a chassis with a lifting mechanism. The

APPROVED FOR RELEASE: 03/14/2001 CIA-RDP86-00513R001344010013-4"

"APPROVED FOR RELEASE: 03/14/2001 CIA-RDP86-00513R001344010013-4

ACCESSION NR: AP4033128

spectrometer has the following characteristics: measurement range, 2-150 atomic mass units (amu); sensitivity, 10 per torr; resolution, 25 per mass 25; pressure range, $10^{-5} - 10^{-10}$ torr; relative error in partial-pressure measurement, ± 10%; magnetic field strength, 3,300 oerst; duration of recording, 2, 5, and 10 sec for oscillographic screen, or 3 and 30 min for EPP-09 electron-potentiometer tape; frequency bands of the oscillator, 30-480 kc for manual sweep, or 30-2,800 kc for automatic sweep. Other details given. Orig. art. has: 5 figures and 3 formulas.

ASSOCIATION: SKB Analiticheskogo priborostroyeniya AN SSSR (Special Design Office for Analytical Instruments, AN SSSR)

SUBMITTED: 06May63 DATE ACQ: 11May64 ENCL: 00

SUB CODE: PH, GE NO REF SOV: 001 OTHER: 004

Card 2/2

APPROVED FOR RELEASE: 03/14/2001 CIA-RDP86-00513R001344010013-4"

"APPROVED FOR RELEASE: 03/14/2001 CIA-RDP86-00513R001344010013-4

PAVLENKO, V.A.; RAFAL'SON, A.E.; SLUTSKIY, M.Ye.; TSVEYMEN, G.A.; SHUTOV, M.D.

Radiofrequency mass spectrometer for the analysis of the ionic and molecular composition of the upper layers of the atmosphere. Prib. i tekh. eksp. no.6:89-95 N-D '60. (MIRA 13:12)

1. Spetsial'noye konstruktorskoye byuro analiticheskogo priborostroyeniya.
(Mass spectrometry) (Atmosphere, Upper)

APPROVED FOR RELEASE: 03/14/2001 CIA-RDP86-00513R001344010013-4"

"APPROVED FOR RELEASE: 03/14/2001 CIA-RDP86-00513R001344010013-4

NECHAYEVA, N.M.; RAFAL'SON, A.E.; TSYMBEROV, M.Ya.

Improving the sensitivity of the PTI-6 mass-spectrometric leak detector. Prib. i tekh. eksp. 9 no.5:161-164 S-O '64. (MIRA 17:12)

1. Spetsial'noye konstruktorskoye byuro analiticheskogo priborostroyeniya AN SSSR.

APPROVED FOR RELEASE: 03/14/2001 CIA-RDP86-00513R001344010013-4"

"APPROVED FOR RELEASE: 03/14/2001 CIA-RDP86-00513R001344010013-4

86748

S/120/60/000/006/023/045
E032/E314

9.6150

AUTHORS: Pavlenko, V.A., Rafal'son, A.E., Slutskiy, M.Ye., Tsveyman, G.A. and Shutov, M.D.

TITLE: Radio-frequency Mass Spectrometer for the Analysis of the Ionic and Molecular Composition of the Upper Layers of the Atmosphere

PERIODICAL: Pribory i tekhnika eksperimenta, 1960, No. 6, pp. 89 - 95

TEXT: A brief description is given of a mass spectrometer designed for studying the ionic and molecular composition of the atmosphere. The mass spectrometer incorporates a non-magnetic radio-frequency analyser which separates ions according to mass, depending on the increase in the energy in electrical high-frequency fields. The instrument was designed to record mass spectra in the mass ranges 1-4 and 12-56. The basic circuit of a 5-stage analyser used in the mass spectrometer is shown in Fig. 2. It is based on the selective properties of three-grid assemblies in which the energy of the positive ions having different m/e ratios is increased by different amounts, depending on the value of this ratio. All three

Card 1/7

APPROVED FOR RELEASE: 03/14/2001 CIA-RDP86-00513R001344010013-4"

"APPROVED FOR RELEASE: 03/14/2001 CIA-RDP86-00513R001344010013-4

86748

S/120/60/000/006/023/045
E032/E314

Radio-frequency Mass Spectrometer for the Analysis of the Ionic and Molecular Composition of the Upper Layers of the Atmosphere

plane-parallel grids are kept at a negative accelerating voltage U_p. In addition, the middle grid is given a further high-frequency voltage. Positive ions entering the analyser from the atmosphere are accelerated by U_p and, on entering the high-frequency field, are given different energy increments depending on their mass. The maximum energy increments are received by the so-called "synchronous" ions, which pass through the first grid when the phase of the high-frequency voltage is 46° and the central grid when the field changes sign. The mass of these ions M is given by:

$$M = 0.266U_p/f^2S^2$$

where U_p is the accelerating negative voltage,
f is the frequency in Mc/s, and
S is the distance between the grids in cm.

Card 2/7

APPROVED FOR RELEASE: 03/14/2001 CIA-RDP86-00513R001344010013-4"

"APPROVED FOR RELEASE: 03/14/2001 CIA-RDP86-00513R001344010013-4

86748

S/120/60/000/006/023/045
E032/E314

Radio-frequency Mass Spectrometer for the Analysis of the Ionic and Molecular Composition of the Upper Layers of the Atmosphere

A positive delay voltage U_d ensures that the collector receives only the "synchronous" ions. An increased resolution of the analyser and the minimum level of "harmonic" masses are reached with a number of three-grid stages in series, with the distances between the middle grids corresponding to 5-9-4-7 periods of the high-frequency voltage. The analyser is equipped with a demountable ion source which is enclosed in an evacuated glass envelope. When a molecular analysis is required the glass envelope can be broken by remote control, using a special breaker attached to the device. The gas entering the analyser is ionised in the ion source by electrons emitted by a hot cathode and the ions are extracted by two grids kept at a small negative voltage. Single-row grids of tungsten wire, 12 μ in diameter, wound with a step of 0.4 mm, were used in the analyser. The power consumed by the cathode did not exceed 0.75 W.

Card 3/7

APPROVED FOR RELEASE: 03/14/2001 CIA-RDP86-00513R001344010013-4"

"APPROVED FOR RELEASE: 03/14/2001 CIA-RDP86-00513R001344010013-4

86748

S/120/60/000/006/023/045
E032/E314

Radio-frequency Mass Spectrometer for the Analysis of the Ionic and Molecular Composition of the Upper Layers of the Atmosphere

The instrument has the following characteristics:

1. Mass range I) 1 - 4, II) 12 - 56
2. Resolution (full width at full height) 50
3. Range of working pressures in the analyser in the case of the analysis of molecular composition 10^{-4} - 10^{-6} mm Hg
4. Partial sensitivity in the analysis of molecular composition (argon) $5 \cdot 10^{-9}$ mm Hg
5. Duration of 1 cycle of automatic sweep through the mass range 3 sec

Card 4/7

APPROVED FOR RELEASE: 03/14/2001 CIA-RDP86-00513R001344010013-4"

"APPROVED FOR RELEASE: 03/14/2001 CIA-RDP86-00513R001344010013-4

86748

S/120/60/000/006/023/045
E032/E314

Radio-frequency Mass Spectrometer for the Analysis of the Ionic and Molecular Composition of the Upper Layers of the Atmosphere

6. Dynamic range of ion current amplifier	10^5
7. Supply voltage	27.5 V ± 10%
8. Power consumed	
a) molecular analyser	6 W
b) ion analyser	5.3 W
9. Working temperature range	-40 to +40 °C
10. Dimensions:	
measuring block of the analyser (without ion source)	210 x 90 x 70 mm^3
ion source	ℓ = 270 mm, Ø 50 mm ℓ = 140 mm, Ø 50 mm
11. Weight of measuring block	1.2 kg
12. Weight of analyser with the electrometric stage and ion source	2.1 kg
13. Specific weight of measuring block	1.2 "

Card 5/7

APPROVED FOR RELEASE: 03/14/2001 CIA-RDP86-00513R001344010013-4"

"APPROVED FOR RELEASE: 03/14/2001 CIA-RDP86-00513R001344010013-4

86748

S/120/60/000/006/023/045
E032/E314

Radio-frequency Mass Spectrometer for the Analysis of the Ionic and Molecular Composition of the Upper Layers of the Atmosphere

Basic circuits are given of the high-frequency oscillator (Fig. 5), sawtooth voltage generator (Fig. 6), switching circuit (Fig. 7) and DC converter (Fig. 8). These circuits are partly transistorised and employ miniaturised components (see above table for dimensions). All the input voltages are stabilised to within ± 0.2%, when the supply voltage changes by ± 10%. The mass spectrometer feeds into the telemetric system the following data:

1) voltage at the outputs of the ion current amplifier (mass spectrum);
2) high-frequency voltage;
3) emission current of the cathode in the ion source, and
4) supply voltage (27.5 V).

Card 6/7

APPROVED FOR RELEASE: 03/14/2001 CIA-RDP86-00513R001344010013-4"

"APPROVED FOR RELEASE: 03/14/2001 CIA-RDP86-00513R001344010013-4

86748

S/120/60/000/006/023/045
E032/E314

Radio-frequency Mass Spectrometer for the Analysis of the Ionic and Molecular Composition of the Upper Layers of the Atmosphere

Instruments of this type were used on rockets to study the ionic and molecular composition of the atmosphere. There are 8 figures and 5 references: 2 Soviet and 3 English.

ASSOCIATION: Spetsial'noye konstruktorskoye byuro analiticheskogo priborostroyeniya (Special Design Bureau for Analytical Instrument Construction)

SUBMITTED: October 15, 1959

Card 7/7

APPROVED FOR RELEASE: 03/14/2001 CIA-RDP86-00513R001344010013-4"

"APPROVED FOR RELEASE: 03/14/2001 CIA-RDP86-00513R001344010013-4

RAFAL'SON, A.G., inzh.

Rewinding an induction motor with increased air gap. Energetik 6 no. 1:27-28 Ja '58. (MIRA 11:8)
(Electric motors, Induction)

APPROVED FOR RELEASE: 03/14/2001 CIA-RDP86-00513R001344010013-4"

"APPROVED FOR RELEASE: 03/14/2001 CIA-RDP86-00513R001344010013-4

L 14534-63 EWT(1)/BDS AFFTC/ASD/SSD

ACCESSION NR: AP3004903 S/0120/63/000/004/0118/0119

AUTHOR: Belov, N. S.; Bronshteyn, A. M.; Ozerov, L. N.; Rafal'son, A. E. 55

TITLE: Electron multiplier with magnetic focusing for a rapid-action mass spectrometer with time-of-flight ion separation

SOURCE: Pribory* i tekhnika eksperimenta, no. 4, 1963, 118-119

TOPIC TAGS: electron multiplier, mass spectrometer, magnetic focusing, time-of-flight separation, rapid-action mass spectrometer, ion separation

ABSTRACT: An electron multiplier for use in registering small pulsed currents of a rapid-action time-of-flight mass spectrometer is described. The multiplier uses crossed electric and magnetic fields to focus secondary electrons from dynode to dynode (see Fig. 1 of Enclosure). A photograph of the device is shown in Fig. 2. The potential difference between stages of the multiplier is 260 v, and field strength is 4350 v/cm. Uniform electric field distribution is achieved by positioning the dynodes in 0.6-mm steps. A magnetic field of 410 oe is produced by a permanent magnet. Two models with 15 and 19 stages, respectively, were studied. Ion current was produced by a rapid-action mass spectrometer with an ion source capable of pulsed and constant-current operation. The mean amplification factor,

Card 1/4

APPROVED FOR RELEASE: 03/14/2001 CIA-RDP86-00513R001344010013-4"

"APPROVED FOR RELEASE: 03/14/2001 CIA-RDP86-00513R001344010013-4

L 14534-63

ACCESSION NR: AP3004903

determined as the ratio of input and output current ratios, was 1.2×10^5 for the 15-stage multiplier and 4×10^6 for the 19-stage multiplier. Output pulse voltage was a linear function of gas pressure. Daily operation of the multipliers using gas and hydrocarbon mixtures with periodic heating to 150—200C and periodic exposure to the atmosphere did not lead to any substantial change in the amplification factor. Disassembly, cleaning, and reassembly with full restoration of the original parameters were easily accomplished. Orig. art. has: 3 figures.

ASSOCIATION: SKB Analiticheskogo priborostroyeniya AN SSSR (SKB of Analytical Instrument Construction, AN SSSR)

SUBMITTED: 03Sep62 DATE ACQ: 28Aug63 ENCL: 02

SUB CODE: PH, SD NO REF SOV: 001 OTHER: 003

Card 2/42

APPROVED FOR RELEASE: 03/14/2001 CIA-RDP86-00513R001344010013-4"

"APPROVED FOR RELEASE: 03/14/2001 CIA-RDP86-00513R001344010013-4

ACCESSION NR: AP4018381 S/0120/64/000/001/0146/0151

AUTHOR: Penchko, Ye. A.; Rafal'son, A. E.; Tsy*mberov, M. Ya.

TITLE: Ionization manometer for 1 to 10^{-5} torr range

SOURCE: Pribory* i tekhnika eksperimenta, no. 1, 1964, 146-151

TOPIC TAGS: manometer, ionization manometer, dismountable manometer, wide-range vacuumeter, vacuumeter

ABSTRACT: An improvement of Ye. A. Penchko's ionization gauge consisting of a cathode and three parallel disks (anode-collector cross-fields) is described (see PTE, 1961, no. 1, p. 170) which permits easy dismemberment in case of a cathode replacement. Design details are reported. Anode-collector voltage, 216 v; cathode-collector voltage, 68 v; cathode emission current, 100 microamp; heater voltage, 1.1 v; heater current, 3 amp. A special vacuumeter (electric circuit diagram presented) is used for supplying the gauge and for measuring the

Card 1/2

APPROVED FOR RELEASE: 03/14/2001 CIA-RDP86-00513R001344010013-4"

"APPROVED FOR RELEASE: 03/14/2001 CIA-RDP86-00513R001344010013-4

ACCESSION NR: AP4018381

ion current. It is claimed that, with supply-voltage variations of ± 15% and a pressure within the $1 - 10^{-5}$ torr range, the emission current varies only to within ± 2%. It is reported that the instrument was in actual operation for over 500 hrs with no cathode burnout, leak, or other trouble. Orig. art. has: 6 figures and 3 formulas.

ASSOCIATION: SKB Analiticheskogo priborostroyeniya AN SSSR (SKB of Analytical Instrument Designing, AN SSSR)

SUBMITTED: 22Feb63 DATE ACQ: 18Mar64 ENCL: 00

SUB CODE: PH NO REF SOV: 002 OTHER: 001

Card 2/2

APPROVED FOR RELEASE: 03/14/2001 CIA-RDP86-00513R001344010013-4"

"APPROVED FOR RELEASE: 03/14/2001 CIA-RDP86-00513R001344010013-4

BELOV, N.S.; BRONSHTEYN, A.M.; OZEROV, L.N.; RAFAL'SON, A.E.

Electron multiplier tube with magnetic focusing for a high-speed mass spectrometer with separation of ions in flight. Prib. i tekh. eksp. 8 no.4:118-119 Jl-Ag '63. (MIRA 16:12)

1. Spetsial'noye konstruktorskoye byuro analiticheskogo priborostroyeniya AN SSSR.

APPROVED FOR RELEASE: 03/14/2001 CIA-RDP86-00513R001344010013-4"

"APPROVED FOR RELEASE: 03/14/2001 CIA-RDP86-00513R001344010013-4

SOV-120-58-3-1/33

AUTHORS: Pavlenko, V. A., Rafal'son, A.E., Shereshevskiy, A. M.

TITLE: Industrial Mass-Spectrometers : Manufacture and New Developments (A Review) (Promyshlennyye mass-spektrometry : proizvodstvo i novyye razrabotki (Obzor))

PERIODICAL: Pribory i Tekhnika Eksperimenta, 1958, Nr 3, pp 3-15 (USSR)

ABSTRACT: A review is given of the mass-spectrometers at present manufactured in the Soviet Union. The classification code employed is as follows:

Types of Mass-Spectrometer	Code
For chemical composition analysis	MKh
For isotopic composition analysis	MI
High resolution instruments	MV

Method of ion separation	
Homogeneous magnetic field	1
Non-homogeneous magnetic field	2
Reserve	3
Magneto-dynamic	4
Time of flight	5
Radio frequency	6

Card 1/11

APPROVED FOR RELEASE: 03/14/2001 CIA-RDP86-00513R001344010013-4"

"APPROVED FOR RELEASE: 03/14/2001 CIA-RDP86-00513R001344010013-4

SOV-120-58-3-1/33

Industrial Mass-Spectrometers: Manufacture and New Developments (A Review)

Application	
Indicators	1
Control of manufacture	2
Laboratory studies	3
Special instruments	4

The following is an example of the code. MI 1305 means that the mass-spectrometer is used for analysis of isotopic composition (MI), uses a homogeneous magnetic field (1), is designed for laboratory studies (3) and is a model Nr 5 (05). The characteristics of 11 mass spectrometers are given.

MI 1301 This instrument is designed for analysis of isotopic composition of gases and easily vaporised substances. Its characteristics are as follows:

Card 2/11

APPROVED FOR RELEASE: 03/14/2001 CIA-RDP86-00513R001344010013-4"

"APPROVED FOR RELEASE: 03/14/2001 CIA-RDP86-00513R001344010013-4

Industrial Mass-Spectrometers: Manufacture and New Developments (A Review)

MI 1301

Mass range	2÷400
Resolving power	300
Radius of the central trajectory of the ion beam	200 mm
Relative error in isotopic composition analysis:	
(a) single beam measurement	±1%
(b) double beam measurement	±0.2%
Sensitivity	0.001%
Maximum analyser magnetic field	7000 oersted
Range of accelerating voltage	2÷3 kV
Minimum ion beam measurable (1 amplifier)	5×10^{-14} amp
Minimum ion beam measurable (2 amplifiers)	5×10^{-15} amp
Time constant of ion beam amplifiers	1 sec
Warming-up time	2-3 hours
Dimensions	22 x 18 x 9 m

MI 1303 This instrument is designed for analysis of isotopic composition for gases and vapours of liquids and solids. Its characteristics are as follows:

APPROVED FOR RELEASE: 03/14/2001 CIA-RDP86-00513R001344010013-4"

"APPROVED FOR RELEASE: 03/14/2001 CIA-RDP86-00513R001344010013-4

SOV-120-58-3-1/33

Industrial Mass-Spectrometers: Manufacture and New Developments (A Review)

MI 1303

Mass range	1÷250
Resolving power	300
Radius of central trajectory of ion beam	200 mm
Relative error in analysis of isotopic composition	±1%
Sensitivity	0.01%
Maximum magnetic field of analyser	6000 oersted
Accelerating voltage	3, 4, 5 kV
Minimum measurable ion current	5×10^{-15} amp
Error of mass number indicator	±0.4
Time constant of ion current amplifier	1 sec
Warming-up time	2-3 hours
Dimensions	26 x 18 x 9.6 m

MI 1305 This instrument is designed for the same purposes as the preceding two spectrometers and replaces them. Its characteristics are as follows:

Card 4/11

APPROVED FOR RELEASE: 03/14/2001 CIA-RDP86-00513R001344010013-4"

"APPROVED FOR RELEASE: 03/14/2001 CIA-RDP86-00513R001344010013-4

SOV-120-58-3-1/33

Industrial Mass-Spectrometers: Manufacture and New Developments (A Review)

MI 1305

Mass range	1÷400
Resolving power	300
Radius of central trajectory of ion beam	200 mm
Relative error in analysis of isotopic composition:	
(a) single beam measurements	±1%
(b) double beam measurements	±0.2%
Sensitivity	0.001%
Minimum current	5×10^{-15} amp
Time constant of ion beam amplifier	1 sec
Warming-up time	2-3 hours
Dimensions	26 x 18 x 9.5 m

MKh 1302 This instrument is designed for analysis of isotopic and molecular composition of gases and easily vapourised substances. Its characteristics are as follows:

Card 5/11

APPROVED FOR RELEASE: 03/14/2001 CIA-RDP86-00513R001344010013-4"

"APPROVED FOR RELEASE: 03/14/2001 CIA-RDP86-00513R001344010013-4

Industrial Mass-Spectrometers: Manufacture and New Developments (A Review)

MKh 1302

Mass range	1÷4, 12÷80
Resolving power	80
Radius of central trajectory of ion beam	100 mm
Relative error in analysis of molecular composition	±2%
Sensitivity	0.02%
Maximum magnetic field of analyser	5500 oersted
Accelerating voltage	800 V
Maximum sensitivity of ion beam amplifier	5×10^{-14} amp
Time constant of ion beam amplifier	1 sec
Warming-up time	2 hours
Dimensions	12 x 8.5 x 18 m

MKh 1303 This instrument is designed for analysis of molecular and isotopic composition of gaseous, liquid, and solid mixtures with vapour pressure greater than 0.5 mm Hg and at a temperature not greater than 300°C. Its characteristics are as follows:

APPROVED FOR RELEASE: 03/14/2001 CIA-RDP86-00513R001344010013-4"

"APPROVED FOR RELEASE: 03/14/2001 CIA-RDP86-00513R001344010013-4

SOV-120-5-3-1/33

Industrial Mass-Spectrometers: Manufacture and New Developments (A Review)

MKh 1303

Mass range	1÷300
Resolving power	400
Radius of central trajectory of ion beam	200 mm
Relative error in analysis of molecular composition	±2%
Sensitivity	0.002%
Accelerating voltage	2 and 4 kV
Minimum measured ion current	5×10^{-15} amp
Time constant of ion current amplifier	1 sec
Stability of the temperature of ionisation chamber of the ion source	$\pm 1^{\circ}C$

MV 2301 This instrument is designed for isotopic and molecular composition of gases and easily vapourised substances. Its characteristics are as follows:

Card 7/11

APPROVED FOR RELEASE: 03/14/2001 CIA-RDP86-00513R001344010013-4"

"APPROVED FOR RELEASE: 03/14/2001 CIA-RDP86-00513R001344010013-4

SOV-120-58-3-1/25

Industrial Mass-Spectrometers: Manufacture and New Developments (A Review)

MV 2301

Mass range	1÷100
Resolving power	5000
Radius of central trajectory of ion beam	200 mm
Sensitivity	0.0005%
Maximum analysing magnetic field	5000 oersted
Accelerating voltage	2.5 and 5 kV
Minimum measured ion current	5×10^{-15} amp
Time constant of ion current amplifier	1.5 sec
Warming up time	3 hours
Dimensions	19 x 18.9 x 12.85 m

MI 1101 This instrument is designed for rapid analysis of isotopic composition of alkali metals. Its characteristics are as follows:

Card 3/11

APPROVED FOR RELEASE: 03/14/2001 CIA-RDP86-00513R001344010013-4"

"APPROVED FOR RELEASE: 03/14/2001 CIA-RDP86-00513R001344010013-4

SOV-120-58-3-1/33

Industrial Mass-Spectrometers: Manufacture and New Developments (A Review)

MI 1101

Mass range (depending on the model)	4÷40
Resolving power (depending on the model)	25÷40
Relative error	±3%
Radius of central trajectory of ion beam	100 mm
Intensity of analysing magnetic field	1350÷2300 oersted
Working pressure in the analyser chamber	5×10^{-5} mm
Accelerating voltage	0.6÷1.2 kV
Warming-up time	1 hour
Dimensions	8.6 x 6.5 x 5.3 m

MI 1306 This instrument is designed for analysis of isotopic composition of micro-quantities and micro-concentrations of solid substances. Its characteristics are as follows:

Mass range	1÷400
Resolving power	600÷700
Radius of central trajectory of ion beam	300 mm
Minimum quantity of analysed substance	$\sim 10^{-8}$ g
Minimum content of analysed component	$\sim 10^{-4}$%
Minimum measured ion current	$\sim 10^{-17}$ amp

Card 9/11

APPROVED FOR RELEASE: 03/14/2001 CIA-RDP86-00513R001344010013-4"

"APPROVED FOR RELEASE: 03/14/2001 CIA-RDP86-00513R001344010013-4

SOV-120-58-3-1/33

Industrial Mass-Spectrometers: Manufacture and New Developments (A Review)

MKh 5201 This instrument is designed for continuous analysis and recording of six different components of a complex gaseous mixture in industrial conditions:

Mass range	12÷56
Resolving power	40
Sensitivity	0.05%
Relative error	±5%
Dimensions	16 x 8 x 5 m

MKh 6401 This instrument is designed for analysis of molecular chemical composition of gases in the mass range 2-60. Its characteristics are as follows:

Mass range	2÷8 and 12÷56
Resolving power	~45
Sensitivity	0.1%
Relative error	±5%
Frequency in the first range	5 Mc/s
Frequency in the second range	15 Mc/s
Working pressure in analyser	2×10^{-5} mm
Accelerating voltage	80÷400

Card 10/11

APPROVED FOR RELEASE: 03/14/2001 CIA-RDP86-00513R001344010013-4"

"APPROVED FOR RELEASE: 03/14/2001 CIA-RDP86-00513R001344010013-4

SOV-120-58-3-1/33

Industrial Mass-Spectrometers: Manufacture and New Developments (A Review)

A magneto-dynamic mass spectrometer.
This instrument is designed for analysis of isotopic and chemical composition of gases. The ions are separated according to the time of flight along spiral trajectories in a uniform magnetic field. The mass range is 2-40, the resolving power is 5000, and the sensitivity 0.1%. There are 14 figures.

ASSOCIATION: Vsesoyuznoye gosudarstvennoye konstruktorskoye byuro analiticheskogo priborostroyeniya (State All-Union Constructor Bureau for Analytical Instruments)

SUBMITTED: December 30, 1957.

1. Mass spectrum analyzers--Production 2. Mass spectrum analyzers--Design 3. Mass spectrum analyzers--Classification 4. Mass spectrum analyzers--Applications

Card 11/11

APPROVED FOR RELEASE: 03/14/2001 CIA-RDP86-00513R001344010013-4"

"APPROVED FOR RELEASE: 03/14/2001 CIA-RDP86-00513R001344010013-4

L 15681-65 EWT(d) Po-4/Pq-4/Pg-4/Pk-4/Pl-4 ASD-3/AFFTC/ESD-3/AEDC(b)

ACCESSION NR: AP4047482 S/0120/64/000/005/0161/0164

AUTHOR: Nechayeva, N. M.; Rafal'son, A. E.; Tsy*mberov, M. Ya.

TITLE: Enhancing the sensitivity of a PTI-6 mass-spectrometric leak detector

SOURCE: Pribory* i tekhnika eksperimenta, no. 5, 1964, 161-164

TOPIC TAGS: leak detector, mass spectrometric leak detector / PTI-6 leak detector

ABSTRACT: The sensitivity of a PTI-6 leak detector is limited (to about 5×10^{-7} lmc/sec) by the instability of the residual peak of He ion current which may reach values as high as 50—100 mv. The use of two (instead of one) type NVO-40 diffusion oil-vapor pumps is suggested to increase the sensitivity of detectors currently employed in industrial installations. Experiments have shown that the addition of the second pump results in a 50—100-times higher sensitivity (1—2 mv) because the minimum reliable reading does not vary with decreasing the

Card 1/2

APPROVED FOR RELEASE: 03/14/2001 CIA-RDP86-00513R001344010013-4"

"APPROVED FOR RELEASE: 03/14/2001 CIA-RDP86-00513R001344010013-4

L 15681-65
ACCESSION NR: AP4047482

heater power but is determined only by the instability of the d-c amplifier (±1 mv). Instructions for remodeling the detector are supplied. Orig. art. has: 5 figures and 2 tables.

ASSOCIATION: SKB Analiticheskogo priborostroyeniya AN SSSR (Special Design Office for Analytical Instruments, AN SSSR)

SUBMITTED: 01Nov63 ENCL: 00

SUB CODE: ME NO REF SOV: 001 OTHER: 002

Card 2/2

APPROVED FOR RELEASE: 03/14/2001 CIA-RDP86-00513R001344010013-4"

"APPROVED FOR RELEASE: 03/14/2001 CIA-RDP86-00513R001344010013-4

PAVLENKO, V.A.; RAFAL'SON, A.Ye.; SHERESHEVSKIY, A.M.

Industrial mass spectrometers (manufacture and new designs). Prib. i tekh. eksp. no.3:3-15 My-Je '58. (MIRA 11:6)

1.Gosudarstvennoye soyuznoye konstruktorskoye byuro analiticheskogo priborostroyeniya.

(Mass spectrometry)

APPROVED FOR RELEASE: 03/14/2001 CIA-RDP86-00513R001344010013-4"

"APPROVED FOR RELEASE: 03/14/2001 CIA-RDP86-00513R001344010013-4

Category : Human and Animal Physiology, Blood

Abs. Jour. : Ref Zhur - Biol., No. 2, 1959, No. 7948

Author : Rafal'son D.; Ashkinazi L.; Diakanovich S.

Title : The Role of the Central Nervous System in the Mechanism of Blood Regeneration in Donors.

Orig Pub. : V sb.: Aktual'n. vopr. pereliv. krovi. Vyp. 5, Leningrad, 1957, 14--21

Abstract : The study was performed on 175 donors between the ages of 21 and 50 who had been donors for at least 3 years. Normal regeneration of blood was observed in 100 donors after they had given blood; in 75, regeneration was diminished. According to type of higher nervous activity, the donors were designated as strong, weak and intermediate. Bromine and strychnine were used to alter the reaction of the organism to giving blood. When Br was given (30 ml of a 3% solution 1 hour before blood was taken), in those donors with reduced blood regeneration the fall

Card: 1/4

APPROVED FOR RELEASE: 03/14/2001 CIA-RDP86-00513R001344010013-4"

"APPROVED FOR RELEASE: 03/14/2001 CIA-RDP86-00513R001344010013-4

Country : USSR T
Category : Human and Animal Physiology, Blood

Jour. : Ref Zhur - Biol., No. 2, 1959, No. 7948

Author :
Institution :
Title :

Orig. Pub. :

Abstract : in Hb, erythrocyte and reticulocyte levels immediately after 280 ml of blood was taken and five days later was negligible in comparison with that seen in the donors which did not receive Br. The same result was observed in donors with normal and retarded regeneration after 400 ml of blood was taken. Donors with retarded blood regeneration which did not receive Br showed a sudden drop in red blood indices after losing 280 ml of blood. Strychnine exerted a regulatory effect on donors

Card: 2/4

APPROVED FOR RELEASE: 03/14/2001 CIA-RDP86-00513R001344010013-4"

"APPROVED FOR RELEASE: 03/14/2001 CIA-RDP86-00513R001344010013-4

Country : USSR T
Category : Human and Animal Physiology, Blood

Abs. Jour. : Ref Zhur - Biol., No. 2, 1959, No. 7948

Author :
Institut. :
Title :

Orig. Pub. :

Abstract : poor, it is useful to prescribe Br in combination with Fe preparations.--M.I.Yershovich

Card: 4/4

APPROVED FOR RELEASE: 03/14/2001 CIA-RDP86-00513R001344010013-4"

"APPROVED FOR RELEASE: 03/14/2001 CIA-RDP86-00513R001344010013-4

KOTOVSHCHIKOVA, M.A.; NIKOLAYEVA, L.K.; IVANOVA, N.M.; RAFAL'SON, D.I.; VEYKHER, Z.F.; ROZANOVA, L.M.

Effect of taking small and moderate doses of bone marrow on the body of the donor. Report No.2: Effect of taking bone marrow on some factors of the blood coagulation system and natural immunity. Probl. gemat. i perel. krovi no.10:35-40 '63 (MIRA 18:1)

1. Iz Leningradskogo nauchno-issledovatel'skogo ordena Trudovogo Krasnogo Znameni instituta perelivaniya krovi (dir.- dotsent A.D. Belyakov, nauchnyy rukovoditel' - chlen-korrespondent AMN SSSR prof. A.N. Filatov).

APPROVED FOR RELEASE: 03/14/2001 CIA-RDP86-00513R001344010013-4"

"APPROVED FOR RELEASE: 03/14/2001 CIA-RDP86-00513R001344010013-4

RAFAL'SON, D.I., starshiy nauchnyy sotrudnik; VEYKHER, Z.F., nauchnyy sotrudnik

Improvement in the method of analysis of venous blood in the mass investigation of donors. Akt.vop.perel.krovi no.7:69-73 '59. (MIRA 13:1)

1. Donorskiy otdel Leningradskogo instituta perelivaniya krovi (rukovoditel' temy - prof. L.G. Bogomolova).
(BLOOD--ANALYSIS AND CHEMISTRY)

APPROVED FOR RELEASE: 03/14/2001 CIA-RDP86-00513R001344010013-4"

"APPROVED FOR RELEASE: 03/14/2001 CIA-RDP86-00513R001344010013-4

RAFAL'SON, D.I.; KULAKOVA, M.N.; KRUTOGOLOVA, F.M.; TETERINA, Z.K.; LAZAREVA, M.S.; ORLOVA, N.N.; BARANOVA, L.P.; NAZAREVSKAYA, O.V.; SHIBA, Ye.P.; MEL'CHENKO, K.M.; ZELENKOVSKAYA, A.N.

Significance of blood transfusion in the transmission of epidemic hepatitis. Zhur.mikrobiol., epid. i immun. 42 no.9:81-85 S '65. (MIRA 18:12)

1. Leningradskiy institut perelivaniya krovi, 1-ya, 2-ya i 3-ya gorodskiye stantsii perelivaniya krovi i Leningradskaya gorodskaya sanitarno-epidemiologicheskaya stantsiya. Submitted February 29, 1964.

APPROVED FOR RELEASE: 03/14/2001 CIA-RDP86-00513R001344010013-4"

"APPROVED FOR RELEASE: 03/20/2001 CIA-RDP86-00513R001344010013-4

L 48832-65

ACCESSION NR: AP5005815

cedure is described briefly. The results are illustrated in Figs. 1 and 2 of the Enclosure. The correspondence between the experimental data and theoretical calculations based on the nature of the crystal lattice of the uranium and of the sulfides is discussed and is found to be satisfactory. The general conclusion is that while in solution the uranium is hexavalent, and the decrease in the total concentration of the uranium with increasing temperature is due to a more complete reduction of the hexavalent uranium and a decrease in the ratio of hexa- to tetravalent uranium. In spite of the title, no pressure dependence is discussed. Orig. art. has: 2 figures.

ASSOCIATION: None

SUBMITTED: 04May64 ENCL: 02 SUB CODE: MM, IC

NR REF SOV: 004 OTHER: 001

Card 2/4

APPROVED FOR RELEASE: 03/20/2001 CIA-RDP86-00513R001344010013-4"

"APPROVED FOR RELEASE: 03/20/2001 CIA-RDP86-00513R001344010013-4

OSIPOV, B.C.; [illegible], R.I.

Some data on stability in the systems $MeS(MeS_2) - VO_2SO_4 - H_2O$ at elevated temperatures and pressures. Atom. energ. 18 no.2: 189-191 F '65. (MIRA 18:3)

APPROVED FOR RELEASE: 03/20/2001 CIA-RDP86-00513R001344010013-4"

"APPROVED FOR RELEASE: 03/20/2001 CIA-RDP86-00513R001344010013-4

L 18937-65 EWT(m)/EPF(n)-2/EWP(t)/EWP(b) Pu-4 IJP(c)/AEDC(a) JD/JG/WW/ES

ACCESSION NR: AP5003162 S/0078/64/009/009/2222/2230

AUTHOR: Vlasov, A. D.; Rafal'skiy, R. P. B

TITLE: Study of the system UO_2SO_4-S-H_2O-(SiO_2) at high temperature and pressures

SOURCE: Zhurnal neorganicheskoy khimii, v. 9, no. 9, 1964, 2222-2230

TOPIC TAGS: uranium, uranium compound, sulfur compound, high temperature effect, pressure effect 27

ABSTRACT: The authors studied the relationship of equilibrium concentrations to temperature and initial concentration for hexavalent uranium. The concentrations of uranium decrease with rising temperature: abruptly at 100-200°, and smoothly at $T > 200°$. As initial concentrations increase, the equilibrium concentrations also increase. This rise is less pronounced at high temperatures.

In the system H_2SO_4-UO_2-S-H_2O at 200°, the concentrations of uranium in solution are close to the corresponding equilibrium concentrations in the system UO_2SO_4-S-H_2O (for the same molalities of H_2SO_4 and UO_2SO_4). The identity of these systems was thus experimentally demonstrated.

Using an analysis of the relations $c = f(c_0)$, the authors set up equations for the reactions taking place in the system UO_2SO_4-S-H_2O at 100,

Card 1/2

APPROVED FOR RELEASE: 03/20/2001 CIA-RDP86-00513R001344010013-4"

"APPROVED FOR RELEASE: 03/20/2001 CIA-RDP86-00513R001344010013-4

L 18937-65
ACCESSION NR: AP5003162

150, and 200°. The equilibrium constants and changes in free energy of these reactions were calculated for 150 and 200°.

The composition of the reaction products in the system UO_2SO_4-S-H_2O changes with rising temperature from SO at 100° to polythionic acids or other high-oxygen compounds of sulfur at 360°, i.e., toward the formation of sulfur of higher valency states. Orig. art. has: 1 figure, 6 formulas, 9 graphs, 3 tables.

ASSOCIATION: none

SUBMITTED: 18Apr63 ENCL: 00 SUB CODE: IC, GC

NO REF SOV: 003 OTHER: 003 JPRS

Card 2/2

APPROVED FOR RELEASE: 03/20/2001 CIA-RDP86-00513R001344010013-4"

"APPROVED FOR RELEASE: 03/20/2001 CIA-RDP86-00513R001344010013-4

RAFAL'SKIY, R.P.

Transportation and sedimentation of uranium by hydrothermal solutions and the role of complex formation in these processes. Geokhimiia no.5:512-514 My '63. (MIRA 16:7)

(Uranium ores)

APPROVED FOR RELEASE: 03/20/2001 CIA-RDP86-00513R001344010013-4"

"APPROVED FOR RELEASE: 03/20/2001 CIA-RDP86-00513R001344010013-4

RAFAL'SKIY, R.P.; VLASOV, A.D.; NIKOL'SKAYA, I.V.

Possibility for the synchronous transport of U^{VI} and S by hydrothermal solutions (based on experimental data). Dokl. AN SSSR 151 no.2: 432-434 Jl '63. (MIRA 16:7)

1. Predstavleno akademikom D.S.Korzhinskim.
(Uranium) (Sulfur)
(Geochemistry)

APPROVED FOR RELEASE: 03/20/2001 CIA-RDP86-00513R001344010013-4"

"APPROVED FOR RELEASE: 03/20/2001 CIA-RDP86-00513R001344010013-4

RAFAL'SKIY, R.P.; KUDINOVA, K.F.

Experimental study of the deposition of uranium oxides from hydrothermal solutions. Geol.rud.mestorozh. no.6:46-53 N-D '62. (MIRA 15:12)

(Uranium oxides)

APPROVED FOR RELEASE: 03/20/2001 CIA-RDP86-00513R001344010013-4"

"APPROVED FOR RELEASE: 03/20/2001 CIA-RDP86-00513R001344010013-4

RAFAL'SKIY, R.P.; VLASOV, A.D.; KUDINOVA, K.F.

Synthesis of UO_2 by the reduction of hexavalent uranium by elementary sulfur under hydrothermal conditions. Atom. energ. 13 no.2:181-183 Ag '62. (MIRA 15:8)
(Uranium oxide crystals—Growth)

APPROVED FOR RELEASE: 03/20/2001 CIA-RDP86-00513R001344010013-4"

"APPROVED FOR RELEASE: 03/20/2001 CIA-RDP86-00513R001344010013-4

S/089/62/013/002/008/011
B102/B104

AUTHORS: Rafal'skiy, R. P., Vlasov, A. D., Kudinova, K. F.

TITLE: UO_2 synthesis by U(VI) reduction with elementary sulfur under hydrothermal conditions

PERIODICAL: Atomnaya energiya, v. 13, no. 2, 1962, 181-183

TEXT: U(VI) U(IV) reduction in uranyl sulfate solutions by sulfur vapor is described. Altogether 13 experiments were made under various conditions, and in particular with different periods of heating, at a molar ratio U:S = 1:1. The sulfur vapor pressure corresponded to the vapor saturation pressure. The heating temperatures in the autoclave were 360°C, or in 2 cases 200°C, and the heating periods varied between 1 and 72 hrs. U-concentration in the initial solution was 25, or in one case 100 g/l; pH was 2.3 (or in individual cases 0.5, 1.7, 0.8); the solution volume was 20-50 ml (3.5, 9); and the uranium concentration in the final solution was between 0.001 and 18.5 g/l. In all cases the synthesis products were studied using X-rays. It is shown that U(VI)-S interaction at 360°C during 20 hrs and more causes virtually complete uranium reduction (25 g/l

Card 1/2

APPROVED FOR RELEASE: 03/20/2001 CIA-RDP86-00513R001344010013-4"

"APPROVED FOR RELEASE: 03/20/2001 CIA-RDP86-00513R001344010013-4

solution volume 22 ml, pH 2.3). With heating periods of 1 and 4 hrs (360°C) (25 g/l, pH 2.3, volume of solution 21 and 9 ml) a precipitate of $UO_2 + U_3O_8$ was observed only at t ≥ 14 hrs, and with 22-25 ml pure UO_2 was precipitated. At 200°C reduction proceeds more slowly is less complete. UO_2 precipitates in finely crystalline form (size 0.01 mm, lattice constant 5.45-5.46) U_3O_8, somewhat more coarsely crystalline at 200°C (0.01-0.2 mm). There are 2 figures and 1 table.

SUBMITTED: November 28, 1961

APPROVED FOR RELEASE: 03/20/2001 CIA-RDP86-00513R001344010013-4"

"APPROVED FOR RELEASE: 03/20/2001 CIA-RDP86-00513R001344010013-4

RAFAL'SKIY, Roman Parfen'yevich; VARGANOVA, A.N., red.; VLASOVA, N.A., tekhn. red.

[Physicochemical investigation of the conditions governing the formation of uranium ores] Fiziko-khimicheskoe issledovanie uslovii obrazovaniia uranovykh rud. Moskva, Gosatomizdat 1963. 146 p. (MIRA 17:3)

APPROVED FOR RELEASE: 03/20/2001 CIA-RDP86-00513R001344010013-4"

"APPROVED FOR RELEASE: 03/20/2001 CIA-RDP86-00513R001344010013-4

RAFAL'SKIY, Roman Parfen'yevich; VARGANOVA, A.N., red.; VLASOVA, N.A., tekhn. red.

[Physicochemical investigation of the conditions of uranium ore formation] Fiziko-khimicheskoe issledovanie uslovii obrazovaniia uranovykh rud. Moskva, Gosatomizdat, 1963. 146 p. (MIRA 17:2)

APPROVED FOR RELEASE: 03/20/2001 CIA-RDP86-00513R001344010013-4"

"APPROVED FOR RELEASE: 03/20/2001 CIA-RDP86-00513R001344010013-4

RAFAL'SKIY, V.

Specialized manufacture of fastenings. NTO 5 no.2:31-34 F '63. (MIRA 16:3)

1. Predsedatel' soveta pervichnoy organizatsii Nauchno-tekhnicheskogo obshchestva moskovoskogo zavoda "Stankonormal'".
(Fastenings)

APPROVED FOR RELEASE: 03/20/2001 CIA-RDP86-00513R001344010013-4"

"APPROVED FOR RELEASE: 03/20/2001 CIA-RDP86-00513R001344010013-4

RAFALSKI, W

SCIENCE

PERIODICAL: ROCZNIKI CHEMII, Vol. 31, No. 2, 1957

RAFALSKI, W. Preparation of metallic thorium in compact form by electrolysis of fused salts. p. 741.

MOnthly List of East European Access ons (EEAI) LC Vol. 8, No4
April 1959, Unclass

APPROVED FOR RELEASE: 03/20/2001 CIA-RDP86-00513R001344010013-4"

"APPROVED FOR RELEASE: 03/20/2001 CIA-RDP86-00513R001344010013-4

B-12

COUNTRY : Poland
CATEGORY : Physical Chemistry. Electrochemistry.

ABS. JOUR. : RZKhim., No. 16 1959, No. 56542

AUTHOR : Rafalski, W.
INST. : Not given
TITLE : The Effect of Temperature on the Critical Current Density in $PbCl_2$, $SnCl_2$, and AgCl Melts

ORIG. PUB. : Roczniki Chem, 32, No 4, 905-911 (1958)

ABSTRACT : The onset of the anodic effect on a graphite electrode was recorded oscillographically. It has been found that the critical current density (in amps/cm^2) has the following values (read from the graphs presented in the paper): for $PbCl_2$, 4.1 at 500°, passing through a maximum of about 4.5 at about 620° and falling to about 2.2 at 850°; for $SnCl_2$, 17 at 300°, about 17.4 at 350°, and decreasing to 5.5 at 600°; for AgCl the critical current density falls immediately

CARD: 1/2

APPROVED FOR RELEASE: 03/20/2001 CIA-RDP86-00513R001344010013-4"

"APPROVED FOR RELEASE: 03/20/2001 CIA-RDP86-00513R001344010013-4

82708

P/046/60/005/001-2/002/008
A222/A026

21.3100
5.2200

AUTHOR: Minc, Stefan; Rafalski, Wadim

TITLE: Production of Compact Metallic Thorium by Means of Fuse Salt Electrolysis

PERIODICAL: Nukleonika, 1960, No. 1-2, pp. 47-54.

TEXT: The authors describe an experiment in which they produced solid metallic thorium by means of electrolysis of molten salts in a bath containing 0.4n ThF_4, 0.5n CaF_2 at a temperature of about 1,100°C and a current density of about 650 a per square decimeter. As indicated in the introduction, electrolysis of salts according to Driggs and Liliendahl (Ref. 5, 6) yields powderized metal. Latest research has shown the practicability of thorium reduction from halogen compounds dissolved in a mixture of alkali metal halogens. In order to examine the ways of solid thorium production, the authors electrolyzed a molten mixture of thorium, calcium and zinc salts. Calcium salt was used for the considerable heat of reduction of calcium. The test equipment consisted of an airtight steel tank with a graphite crucible placed on the bottom and serving as the

4

Card 1/3

APPROVED FOR RELEASE: 03/20/2001 CIA-RDP86-00513R001344010013-4"

"APPROVED FOR RELEASE: 03/20/2001 CIA-RDP86-00513R001344010013-4

82708

P/046/60/005/001-2/002/008
A222/A026

Production of Compact Metallic Thorium by Means of Fuse Salt Electrolysis

anode. A concentrical molybdenum rod, 6 mm in diameter, constituted the cathode. The tank was placed in a vertical silit (silicon carbide) furnace heated by a temperature-controlled ($\pm 20^{o}C$) transformer. Argon, purified from oxygen, nitrogen, and humidity, was forced through the tank during electrolysis. Fig. 1 shows a cross section of the steel tank; the electrical wiring system is shown in Fig. 2. Electrolysis was performed by means of direct current from a selenium rectifier. The use of electrolyte I (0.4n ThF_4, 0.5n $CaCl_2$ and 0.1n $ZnCl_2$) at a temperature lower than the boiling point of $ZnCl_2$ resulted in a powder deposit. The first nugget of solid metal along with metallic powder was obtained at a temperature of $900^{o}C$, or higher than the boiling point of $ZnCl_2$, at a current density of about 600 a/10 cm^2. Electrolyte II consisted of 0.4n ThF_4, 0.5n CaF_2 and 0.1n ZnF_2. The optimum temperature and current density, required to produce solid metal on the cathode as established in a sequence of tests, was about $1,100^{o}C$ and about 650 a/10 cm^2 respectively. Solid thorium obtained under these conditions from electrolyte II had a specific density of 11.1 gr/cm^3 and the chemical composition 94.4% Th, 2.7% Fe and Al and a number of other elements, with traces only of Zn.

Card 2/3

APPROVED FOR RELEASE: 03/20/2001 CIA-RDP86-00513R001344010013-4"

"APPROVED FOR RELEASE: 03/20/2001 CIA-RDP86-00513R001344010013-4

82708

P/046/60/005/001-2/002/008
A222/A026

Production of Compact Metallic Thorium by Means of Fuse Salt Electrolysis

Impurities originated from the crucible, tank and salts. There are 6 figures and 9 references: 3 Soviet, 3 English, 2 German and 1 Polish.

ASSOCIATION: Zakład Elektrochemii i Korozji Uniwersytetu Warszawskiego (Department of Electrochemistry and Corrosion, Warsaw University)
Zakład Elektrochemii Instytutu Chemii Fizycznej PAN (Department of Electrochemistry, Institute of Physical Chemistry, Polish Academy of Sciences)

SUBMITTED: November 1959

Card 3/3

APPROVED FOR RELEASE: 03/20/2001 CIA-RDP86-00513R001344010013-4"

"APPROVED FOR RELEASE: 03/20/2001 CIA-RDP86-00513R001344010013-4

RAFALSKI, WADIM

Distr: 4E2c(m)/4E3c 2 cys

Preparation of solid metallic thorium by electrolysis of fused salts. Stefan Minc and Wadim Rafalski (Univ. Warsaw). *Nukleonika* 5, 47-53(1960).—Electrolysis of a fused mixt. of ThF_4, CaF_2, and ZnF_2, 0.4, 0.5, and 0.1*N*, resp., with a graphite anode and a Mo-rod cathode, at ~1100° and 650 amp./sq. dm., gave after 15 min. a solid coat of metallic Th of 94.4% purity, contg. 2.7% Fe. Probably Th was reduced by deposited Ca and a Th-Zn alloy was deposited and subsequently decompd., the amt. of heat generated at the cathode being adequate to fuse the alloy and cause sublimation of Zn. Electrolysis with $CaCl_2$ and $ZnCl_2$ gave powd. Th. J. Stecki

MIK

APPROVED FOR RELEASE: 03/20/2001 CIA-RDP86-00513R001344010013-4"

"APPROVED FOR RELEASE: 03/20/2001 CIA-RDP86-00513R001344010013-4

RAFAL'SKI, Vadim, [Rafalski, W.]; MINTS, Stefan [Minc, S.]

The mechanism of cathode process in the preparation of thorium-zinc alloys in fused salts. I. The systems ThF_4 and ThF_4-CaF_2. Nukleonika 7 no.1:13-23 '62.

1. Polskaya Akademya Nauk, Institut yadernykh isseledovaniy, Varshava.

APPROVED FOR RELEASE: 03/20/2001 CIA-RDP86-00513R001344010013-4"

"APPROVED FOR RELEASE: 03/20/2001 CIA-RDP86-00513R001344010013-4

RAFALSKI, Wadim; MINC, Stefan

Mechanism of the cathode process in the preparation of thorium-zinc alloys in fused salts. II. Research on ZnF_2. Nukleonika 7 no.2:95-100 '62.

1. Institute of Nuclear Research, Polish Academy of Sciences, Warsaw.

APPROVED FOR RELEASE: 03/20/2001 CIA-RDP86-00513R001344010013-4"

"APPROVED FOR RELEASE: 03/20/2001 CIA-RDP86-00513R001344010013-4

RAFALSKI, Vadim (Rafalski, Wadim); MINTS, Stefan (Minc, Stefan)

Mechanism of the cathode process in obtaining thorium-zinc alloys in fused salts. III. Electronic conductance in fused salts. Nukleonika 7 no.3 161-168 '62.

1. Institut yadernikh issledovaniy, PAN, Varshava.

APPROVED FOR RELEASE: 03/20/2001 CIA-RDP86-00513R001344010013-4"

"APPROVED FOR RELEASE: 03/20/2001 CIA-RDP86-00513R001344010013-4

S/081/62/000/023/015/120
B156/B186

AUTHORS: Mints, S., Rafal'ski, V.

TITLE: Kinetics of the process at the cathode when thorium is being separated out of molten salts. Part I. Investigation of ThF_4 and ThF_4-CaF_2

PERIODICAL: Referativnyy zhurnal. Khimiya, no. 23, 1962, 109, abstract 23B806 (Rept. Inst. badań jądrow. PAN, no. 267, 1961 17pp., illust. [summaries in Pol. and Russ.])

TEXT: Voltage-current and voltage-time curves were plotted from recordings made in molten ThF_4 (I), and in a molten mixture of 45 mol% I + 55 mol% CaF_2, at 1100 - 1120°C. The anode was the graphite crucible, the cathode a rod of Mo. Three reduction potentials were found for the molten I: the first (V_1 = 1.91 v) corresponds to the reduction of ThO_2 oxygen compounds, the second (V_2 = 2.5 v) to the conversion of I into ThF_2, and the third (V_3 = 2.95 v) is the potential at which Th separates out from I. In the

Card 1/2

APPROVED FOR RELEASE: 03/20/2001 CIA-RDP86-00513R001344010013-4"

"APPROVED FOR RELEASE: 03/20/2001 CIA-RDP86-00513R001344010013-4

case of the molten I-CaF_2 mixtures, there is an additional potential for the dissociation of CaF_2, equal to 3.9 v. When currents were passed through the molten substances, n-type conductivity was observed. [Abstracter's note: Complete translation.]

APPROVED FOR RELEASE: 03/20/2001 CIA-RDP86-00513R001344010013-4"

"APPROVED FOR RELEASE: 03/20/2001 CIA-RDP86-00513R001344010013-4

S/081/63/000/002/011/088
B193/B102

AUTHORS: Rafal'ski, Vadim, Mints, Stefan

TITLE: Kinetics of the cathodic process when separating thorium from fused salts. Part II. Investigation of ZnF_2

PERIODICAL: Referativnyy zhurnal. Khimiya, no. 2, 1963, 88, abstract 2B550 (Rept. Inst. badań jadrow. PAN, no. 280, W, 9pp. illust. [summaries in Pol. and Ger.])

TEXT: The decomposition voltage (DV) was measured in melts containing 36.7 - 42.5% ThF_4, 45.3 - 52.5% CaF_2 and 5 - 18% ZnF_2. At 1100°C DV = =1.2 ± 0.1 v for ZnF_2. In the measurements the voltage drop in the electrolyte was not taken into account. The temperature of the experiments exceeded the boiling point of Zn, and it is suggested in this connection that the Zn deposited on the cathode vaporized and stable cathode polarization was not reached. For Commun. I cf. RZhKhim, 1962, 23B806. [Abstracter's note: Complete translation.]

Card 1/1

APPROVED FOR RELEASE: 03/20/2001 CIA-RDP86-00513R001344010013-4"

"APPROVED FOR RELEASE: 03/20/2001 CIA-RDP86-00513R001344010013-4

RAFAL'SKI, Vadim [Rafalski, Wadim]; MINTS, Stefan [Minc, Stefan]

Mechanism of the cathode process in preparing thorium-zinc alloys in fused salts. Pt. 4. Nukleonika 8 no.1:41-55 '63.

1. Institut yadernikh issledovaniy, Varshava 9.

APPROVED FOR RELEASE: 03/20/2001 CIA-RDP86-00513R001344010013-4"

"APPROVED FOR RELEASE: 03/20/2001 CIA-RDP86-00513R001344010013-4

R[illegible]KIY, V., inzh.

Silver medal of innovator Sumikhin. Inform.biul.VDNKH no.1:16-17 Ja '65. (MIRA 18:3)

1. Moskovskiy zavod "Stankonormal'".

APPROVED FOR RELEASE: 03/20/2001 CIA-RDP86-00513R001344010013-4"

"APPROVED FOR RELEASE: 03/20/2001 CIA-RDP86-00513R001344010013-4

RAFAL'SKIY, V.I.

Program controlled unit for liquid carburizing and hardening of steel parts. Biul.tekh.-ekon.inform.Gos.nauch.-issl.inst. nauch. i tekh.inform. 16 no.11:32-34 '63. (MIRA 16:11)

APPROVED FOR RELEASE: 03/20/2001 CIA-RDP86-00513R001344010013-4"

"APPROVED FOR RELEASE: 03/20/2001 CIA-RDP86-00513R001344010013-4

RAFAL'SKIY, V.I.

Die for swaging squares. Mashinostroitel' no.11:27 N '63. (MIRA 16:11)

APPROVED FOR RELEASE: 03/20/2001 CIA-RDP86-00513R001344010013-4"

"APPROVED FOR RELEASE: 03/20/2001 CIA-RDP86-00513R001344010013-4

RAFAL'SKIY, V.I.

Hydraulic hoist for automatic lines. Mashinostoitel' no.3: 42-43 Mr '63. (MIRA 16:4)

(Hoisting machinery)

APPROVED FOR RELEASE: 03/20/2001 CIA-RDP86-00513R001344010013-4"

"APPROVED FOR RELEASE: 03/20/2001 CIA-RDP86-00513R001344010013-4

RAFAL'SKIY, V.I., inzh.

From the exhibition into production. Inform. biul. VDNKH no.12: 11-15 D '64 (MIRA 18:2)

1. Zavod "Stankonormal'".

APPROVED FOR RELEASE: 03/20/2001 CIA-RDP86-00513R001344010013-4"

"APPROVED FOR RELEASE: 03/20/2001 CIA-RDP86-00513R001344010013-4

RAFAL'SKIY, V.V.

Electric conductivity of the system KCl - $SnCl_2$. Ukr. khim. zhur. 26 no.5:585-587 '60. (MIRA 13:11)

1. Institut yadernykh issledovaniy Pol'skoy AN.
(Potassium chlorids) (Tin chloride)

APPROVED FOR RELEASE: 03/20/2001 CIA-RDP86-00513R001344010013-4"

"APPROVED FOR RELEASE: 03/20/2001 CIA-RDP86-00513R001344010013-4

RAFAL'SKIY, Ya.D. (Leningrad)

Amount of cholesterol, phospholipids, proteins, and lipoprotein fractions in the blood serum of women during the climateric and in climateric neuroses. Probl.endok.i gorm. 7 no.4:82-89 '61. (MIRA 14:8)

1. Iz laboratorii vozrastnoy fiziologii i patologii cheloveka (zav. - prof. V.G. Baranov) Instituta fiziologii imeni I.P. Pavlova (dir. - prof. V.N. Chernigovskiy) AN SSSR i endokrinologicheskoy laboratorii (nauchnyy rukovoditel' - prof. V.G. Baranov) Instituta akusherstva i ginekologii (dir. - prof. P.A. Beloshapko) AMN SSSR.

(CHOLESTEROL) (LIPIDS) (BLOOD PROTEINS) (CLIMATERIC) (NERVOUS SYSTEM--DISEASES)

APPROVED FOR RELEASE: 03/20/2001 CIA-RDP86-00513R001344010013-4"

"APPROVED FOR RELEASE: 03/20/2001 CIA-RDP86-00513R001344010013-4

RAFAL'SKIY, Ya. D. (Leningrad)

Effect of small and medium doses of estrogens on lipids, lipoprotein and protein fractions in the blood serum of patients with climacteric neurosis. Probl. endok. i gorm. 8 no.3:52-58 My-Je '62. (MIRA 15:6)

1. Iz laboratorii vozrastnoy fiziologii i patologii cheloveka (zav. - deystvitel'nyy chlen AMN SSSR prof. V. G. Baranov) Instituta fiziologii AN SSSR imeni I. P. Pavlova (dir. - chlen-korrespondent AN SSSR, deystvitel'nyy chlen AMN SSSR prof. V. N. Chernigovskiy) i endokrinologicheskoy laboratorii (nauchnyy rukovoditel' - deystvitel'nyy chlen AMN SSSR prof. V. G. Baranov) Instituta akusherstva i ginekologii AMN SSSR (dir. - chlen-korrespondent AMN SSSR prof. P. A. Beloshapko[deceased])

(ESTROGENS) (CLIMACTERIC) (NEUROSES)
(BLOOD PROTEINS) (LIPID METABOLISM)

APPROVED FOR RELEASE: 03/20/2001 CIA-RDP86-00513R001344010013-4"

"APPROVED FOR RELEASE: 03/20/2001 CIA-RDP86-00513R001344010013-4

NASLEDOVA, I.D.; RAFAL'SKIY, Ya.D. (Leningrad)

Effect of estrogens on the development of experimental atherosclerosis in rabbits of different age. Pat.fiziol. i eksp. terap. 7 no.1:44-48 Ja-F'63. (MIRA 16:10)

1. Iz laboratorii vozrastnoy fiziologii i patologii cheloveka (zav. - deystvitel'nyy chlen AMN SSSR V.G.Baranov) Instituta fiziologii imeni I.P.Pavlova (dir. - akademik V.N.Chernigovskiy) AN SSSR.

(ESTROGEN) (ARTERIOSCLEROSIS)

APPROVED FOR RELEASE: 03/20/2001 CIA-RDP86-00513R001344010013-4"

"APPROVED FOR RELEASE: 03/20/2001 CIA-RDP86-00513R001344010013-4

NASLEDOVA, I.D.; RAFAL'SKIY, Ya.D.

Antiatherogenic activity of cortisone and methylandrostendiol in experimental atherosclerosis in rabbits. Farm. i toks. 27 no.1:32-35 Ja-F '64. (MIRA 17:11)

1. Laboratoriya vozrastnoy fiziologii i patologii cheloveka (zav. - deystvitel'nyy chlen AMN SSSR prof. V.G. Baranov) Instituta fiziologii imeni Pavlova AN SSSR i endokrinologicheskaya laboratoriya (nauchnyy rukovoditel' - deystvitel'nyy chlen AMN SSSR prof. V.G. Baranov) Instituta akusherstva i ginekologii AMN SSSR.

APPROVED FOR RELEASE: 03/20/2001 CIA-RDP86-00513R001344010013-4"

"APPROVED FOR RELEASE: 03/20/2001 CIA-RDP86-00513R001344010013-4

NASLEDOVA, I.D.; RAFAL'SKIY, Ya.D.

Effect of the age factor on the development of experimental atherosclerosis. Biul. eksp. biol. i med. 53 no.5:32-36 My '62. (MIRA 15:7)

1. Iz laboratorii vozrastnoy fiziologii i patologii cheloveka (zav. - deystvitel'nyy chlen AMN SSSR V.G. Baranov) Instituta fiziologii imeni I.P. Pavlova (dir. - akademik V.N. Chernigovskiy) AMN SSSR, Leningrad. Predstavlena deystvitel'nym chlenom AN SSSR V.G. Baranovym.
(ARTERIOSCLEROSIS) (AGE)

APPROVED FOR RELEASE: 03/20/2001 CIA-RDP86-00513R001344010013-4"

"APPROVED FOR RELEASE: 03/20/2001 CIA-RDP86-00513R001344010013-4

MASLENNIKOVA, I.P.; RAFALSKIY, Ya.D.

Effect of prolonged sound and light stimuli on the development of experimental atherosclerosis in female rabbits. Pat. fiziol. i eksp. terap. 8 no.6:73-74 N-D '64. (MIRA 18:6)

1. Institut fiziologii imeni Pavlova (dir. - akademik V.N. Chernigovskiy) AN SSSR i Institut akusherstva i ginekologii (dir. - chlen-korrespondent AMN SSSR prof. M.A. Petrov-Maslakov) AMN SSSR, Leningrad.

APPROVED FOR RELEASE: 03/20/2001 CIA-RDP86-00513R001344010013-4"

"APPROVED FOR RELEASE: 03/20/2001 CIA-RDP86-00513R001344010013-4

BARANOV, V.G., prof.; ARSEN'YEVA, M.G.; RASKIN, A.M.; RAFAL'SKIY, Ya.D.; SAVCHENKO, O.N.; STEPANOV, G.S.; ALIPOV, V.I., red.

[Physiology and pathology of the female climacteric] Fiziologiia i patologiia klimakteriia zhenshchiny. Leningrad, Meditsina, 1965. 269 p. (MIRA 18:9)

1. Deystvitel'nyy chlen AMN SSSR (for Baranov).

APPROVED FOR RELEASE: 03/20/2001 CIA-RDP86-00513R001344010013-4"

"APPROVED FOR RELEASE: 03/20/2001 CIA-RDP86-00513R001344010013-4

PAVALUKIY, YA. P.

Dissertation defended at the Institute of Physiology imeni I. P. Pavlov for the academic degree of Candidate of Medical Sciences:

"Content of Cholesterol, Phospholipides, Protein, and Lipoprotein Fractions in Blood Serum of Women During the Aging Period."

Vestnik Akad Nauk, No. 4, 1963, pp. 110-145

APPROVED FOR RELEASE: 03/20/2001 CIA-RDP86-00513R001344010013-4"

"APPROVED FOR RELEASE: 03/20/2001 CIA-RDP86-00513R001344010013-4

1ST AND 2ND ORDERS

PROCESSES AND PROPERTIES INDEX

3RD AND 4TH ORDERS

B

7

*499. **Increasing the Durability of Rotor Blades of Boiler Exhaust Fans.** (In Russian.) B. M. Kontorov and I. I. Rafalvich. *Industrial Power* (U.S.S.R.), v. 4, July 1947, p. 10-11.

Outlines results of experiments which led to the development of superior welding-rod compositions for fabrication of the above. Stalinite—a Cr-Mo-Va alloy—was good, but was in short supply. Three other alloys were developed and tested. The most satisfactory contained 5% boron carbide and was found to be 2-2.5 times more durable than Stalinite.

ASM-SLA METALLURGICAL LITERATURE CLASSIFICATION

APPROVED FOR RELEASE: 03/20/2001 CIA-RDP86-00513R001344010013-4"

"APPROVED FOR RELEASE: 03/20/2001 CIA-RDP86-00513R001344010013-4

L 15688-65 EWT(d) Po-4/Pq-4/Pg-4/Pk-4/Pl-4 ASD-3/AFFTC/ESD-3/APGC
ACCESSION NR: AP4047481 S/0120/64/000/005/0157/0161

AUTHOR: Levina, L. Ye.; Men'shikov, M. I.; Pavlenko, V. A.; Rabinovich, I. S.; Rafal'son, A. E.; Tsy*mberov, M. Ya.; Shutov, M. D.

TITLE: New MKh 1101 mass-spectrometric leak detector

SOURCE: Pribory* i tekhnika eksperimenta, no. 5, 1964, 157-161

TOPIC TAGS: leak detector, mass spectrometric leak detector / MKh 1101 leak detector

ABSTRACT: The new MKh 1101 leak detector differs from previous types (PTI-4a and PTI-6) in that it has no oil-vapor pump, uses an oxidation-resistant cathode, and is calibrated by a reference diffusion-type helium leak. Two lobar rotary (Roots) pumps driven by a single motor provide the rough and fine vacuums; the equilibrium vacuum is $(2-5) \times 10^{-4}$ torr. The cathode is stable in operation at pressures up to 1 torr. The leak detector sensitivity is $(1-5) \times 10^{-8}$

Card 1/2

APPROVED FOR RELEASE: 03/20/2001 CIA-RDP86-00513R001344010013-4"

"APPROVED FOR RELEASE: 03/20/2001 CIA-RDP86-00513R001344010013-4

L 15688-65
ACCESSION NR: AP4047481

1mc/sec for helium and 5×10^{-4} 1ms/sec for hydrogen. Setting the detector in operation takes only 10 minutes. Orig. art. has: 6 figures.

ASSOCIATION: SKB Analiticheskogo priborostroyeniya AN SSSR (Special Design Office for Analytical Instruments, AN SSSR)

SUBMITTED: 03Jun63 ENCL: 00

SUB CODE: ME NO REF SOV: 002 OTHER: 000

Card 2/2

APPROVED FOR RELEASE: 03/20/2001 CIA-RDP86-00513R001344010013-4"

"APPROVED FOR RELEASE: 03/20/2001 CIA-RDP86-00513R001344010013-4

L 7757-66 EWT(m)/EPF(c)/EWP(j)/T/ETC(m) RM/WW

ACC NR: AP5023654 SOURCE CODE: UR/0119/65/000/008/0014/0016

AUTHOR: Ozerov, L. N. (Engineer); Rafal'son, A. E. (Engineer)

ORG: none

TITLE: MKh1201 industrial mass-spectrometer gas analyzer

SOURCE: Priborostroyeniye, no. 8, 1965, 14-16

TOPIC TAGS: gas analyzer / MKh1201 gas analyzer

ABSTRACT: The MKh1201 gas analyzer combines a magnetic 180-degree mass spectrometer with an automatic system (a multipositional floating-action controller) that controls internal and external parameters. The analyzer aligns itself according to a program set by the operator, monitors the contents of 8 components of a mixture, and controls the process according to a set ratio of the two-component content to a third-component (basic component) content. The pressure of the test mixture is lowered stepwise from 1 atm down to 10^{-5} torr.

Card 1/2 UDC: 543.51:543.420.62

APPROVED FOR RELEASE: 03/20/2001 CIA-RDP86-00513R001344010013-4"

"APPROVED FOR RELEASE: 03/20/2001 CIA-RDP86-00513R001344010013-4

L 7757-66
ACC NR: AP5023654

The automatic system includes a 24-point recording potentiometer, a synchronous comparison servo, programing devices, synchronizing devices, and a detached control unit. These characteristics of the analyzer are reported: mass measurement range, 12—100 m.u.; resolution, 45; sensitivity by volume, 0.01%; ratio-determination error, ± 2% and ± 8% for nonsorbable and sorbable components, respectively; total 8-component monitoring time, 4 min; power consumption, 2 kva; size, 1.7x1x0.8 m; weight, 500 kg. A number of defects in the operation of the new analyzer have been detected; hence, the analyzer "is being modernized at the present time." Orig. art. has: 3 figures and 10 formulas.

SUB CODE: 13 / SUBM DATE: 00 / ORIG REF: 002

nw

Card 2/2

APPROVED FOR RELEASE: 03/20/2001 CIA-RDP86-00513R001344010013-4"

"APPROVED FOR RELEASE: 03/20/2001 CIA-RDP86-00513R001344010013-4

L 5041-66 FSS-2/EWT(1)/FS(v)-3/FCC/EWA(h)/ETC(m) IJP(c) TT/WW/GW

ACC NR: AP5026057 SOURCE CODE: UR/0293/65/003/005/0768/0781

AUTHOR: Zarkhin, B. I.; Istomin, V. G.; Rafal'son, A. E.; Slutskiy, M. Ye.
44,55 44,55 44,55 44,55

ORG: none

TITLE: Radio frequency mass spectrometer 21,44,55 for the Electron satellites

SOURCE: Kosmicheskiye issledovaniya, v. 3, no. 5, 1965, 768-781

TOPIC TAGS: spectrometer, mass spectrometer, satellite/Electron satellite 12

ABSTRACT: Mass spectrometer data on the ionosphere 12 has to date been obtained mostly at limited altitudes and for constituents with low mass numbers. The Electron satellites have been equipped with new rf mass spectrometers in order to achieve a more complete analysis of particles at altitudes above 1000 km than has yet been reported. The spectrometer, designated MKh-6405, is installed in slightly differing forms on the Electron satellites and is capable of discriminating ionic or neutral particles up to a mass number of 34. An overall view is shown in Fig. 1. An ion source is included for initial calibration. For this purpose, the analyzer is filled with a control mixture of 35% H_2, 35% He, 25% Ne, and 5% Ar at a total pressure of 1×10^{-5} mm Hg. A low-energy electron gun provides the desired ionization of the control mixture.

Card 1/5 UDC: 621.384.8:525.7

APPROVED FOR RELEASE: 03/20/2001 CIA-RDP86-00513R001344010013-4"

"APPROVED FOR RELEASE: 03/20/2001 CIA-RDP86-00513R001344010013-4

L 5041-66

ACC NR: AP5026057

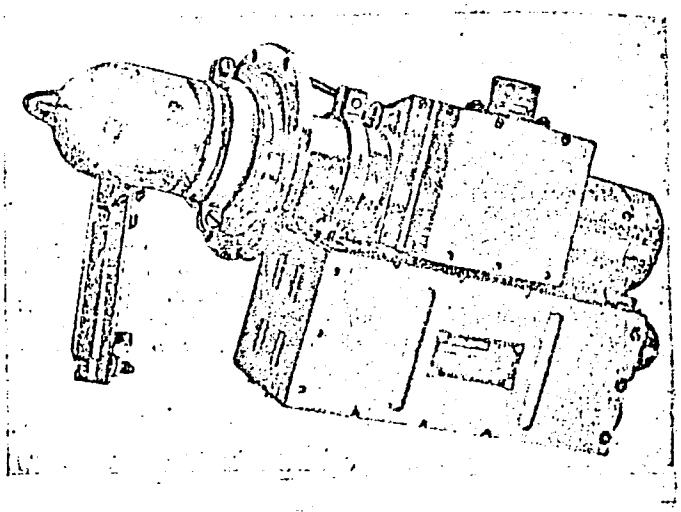

Fig. 1. Overall view of the MKh-6405

In operation, the analyzer envelope is punctured on in-flight command, opening it to the atmosphere. The main features of the analyzer portion are shown in Fig. 2, including the

Card 2/5

APPROVED FOR RELEASE: 03/20/2001 CIA-RDP86-00513R001344010013-4"

"APPROVED FOR RELEASE: 03/20/2001 CIA-RDP86-00513R001344010013-4

L 5041-66

ACC NR: AP5026057

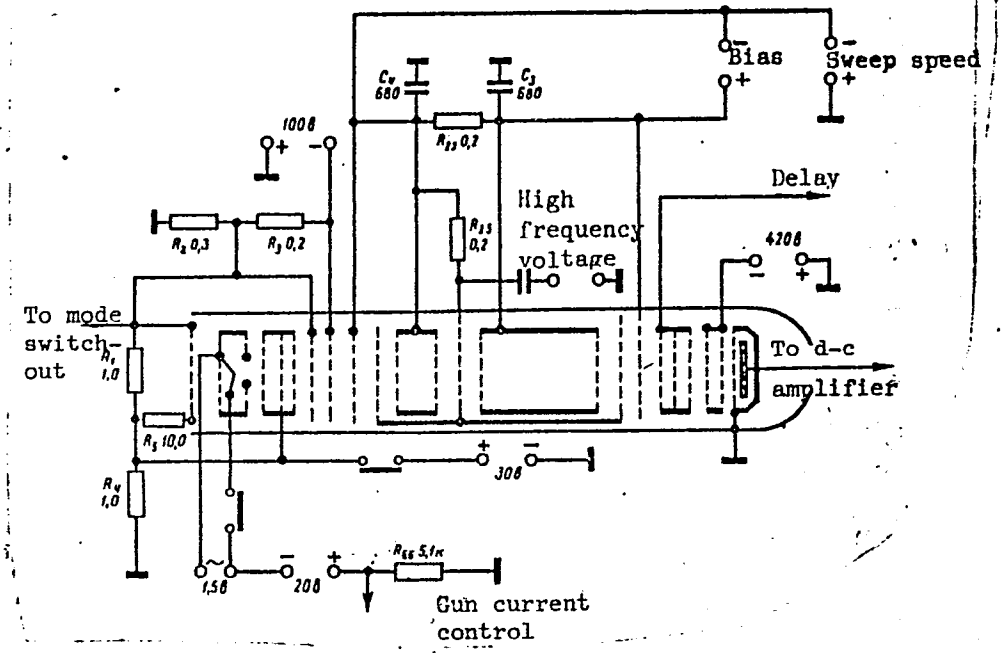

Fig. 2. Analyzer section of the MKh-6405

Card 3/5

APPROVED FOR RELEASE: 03/20/2001 CIA-RDP86-00513R001344010013-4"

"APPROVED FOR RELEASE: 03/20/2001 CIA-RDP86-00513R001344010013-4

L 5041-66

ACC NR: AP5026057

electron gun and accelerating grids. For ion analysis, the gun is switched off, and a potential of -60 v is applied to the input grids; for neutral particle analysis, a potential of +30 v is applied to the grids, thus excluding atmospheric ions. The electronic subassemblies which generate the mass discriminating modes for the analyzer are described; these include an ion current amplifier, high-frequency oscillator, sawtooth sweep generator, switching unit, and a stabilized power supply. Both transistors and ruggedized monolithic subminiature tubes are used. The ion current amplifier provides outputs in three sensitivities, in the ratio of 0.08:1:10, to telemetry channels. Other pertinent specifications of the spectrometer and its analyzer portion are given in the accompanying table.

Spectrometer:

- Mass ranges, 1—2 and 4—34 amu
- Detection sensitivity, average mass ion, 10 ions/cm^3
- Duration of mass range sweep, 3 sec
- Power drain, ion analysis mode, 3 w
- Weight, 2 kg

Analyzer:

- Number of selector stages, 3
- Number of cycles in the stages, 2—7
- Grid spacing, 4 mm
- Grid mesh, 0.4 mm
- Diameter of input port, 25 mm

Card 4/5

APPROVED FOR RELEASE: 03/20/2001 CIA-RDP86-00513R001344010013-4"

"APPROVED FOR RELEASE: 03/20/2001 CIA-RDP86-00513R001344010013-4

L 5041-66

ACC NR: AP5026057

Frequency for the 1—2 amu range, 16.3 Mc
Frequency for the 4—34 amu range, 4.08 Mc
Diameter, 50 mm
Length, 300 mm
Weight, 0.8 kg

Orig. art. has: 2 tables and 11 figures. [SH]

SUB CODE: OP, SV/ SUBM DATE: 02Jun64/ ORIG REF: 012/ OTH REF: 004/ ATD PRESS: 4132

Card 5/5

APPROVED FOR RELEASE: 03/20/2001 CIA-RDP86-00513R001344010013-4"

"APPROVED FOR RELEASE: 03/20/2001 CIA-RDP86-00513R001344010013-4

KUDRYAVTSEV, G.N.; LEVINA, G.N.; LEPEKHINA, V.T.; MARTYNKEVICH, G.M.; OZEROV, L.N.; RAFAL'SON, A.E.

Some characteristics and possibilities of a miniature transit-time mass spectrometer. Trudy TSAO no.61:93-99 '65. (MIRA 18:7)

APPROVED FOR RELEASE: 03/20/2001 CIA-RDP86-00513R001344010013-4"

"APPROVED FOR RELEASE: 03/20/2001 CIA-RDP86-00513R001344010013-4

RAFAL'SON, A.E.

Quadrupole mass-analyzer and its application in chemical and isotope analyses. Zhur. tekh. fiz. 35 no.1:3-13 Ja '65.

(MIRA 18:3)

APPROVED FOR RELEASE: 03/20/2001 CIA-RDP86-00513R001344010013-4"

"APPROVED FOR RELEASE: 03/20/2001 CIA-RDP86-00513R001344010013-4

AVERINA, A.P.; LEVINA, G.N.; LEPEKHINA, V.T.; RAFAL'SON, A.E.

Omegatron mass-spectrometer for analyzing residual gases in high-vaccum systems. Prib. i tekh. eksp. 9 no.2: 121-125 Mr-Ap'64. (MIRA 17:5)

1. Spetsial'noye konstruktorskoye byuro analiticheskogo priborostroyeniya AN SSSR.

APPROVED FOR RELEASE: 03/20/2001 CIA-RDP86-00513R001344010013-4"

"APPROVED FOR RELEASE: 03/20/2001 CIA-RDP86-00513R001344010013-4

ACCESSION NR: AP4003737 S/0293/63/001/002/0287/0295

AUTHOR: Pavlenko, V. A.; Rafal'son, A. E.; Shutov, M. D.

TITLE: Series of small-scale mass spectrometers for the study of neutral and ionized gases of the upper layers of the atmosphere

SOURCE: Kosmicheskiye issledovaniya, v. 1, no. 2, 1963, 287-295

TOPIC TAGS: mass spectrometer, radio frequency mass spectrometer, nonmagnetic mass spectrometer, MKh6401 mass spectrometer, MKh 6403 mass spectrometer, MKh6405 mass spectrometer, upper atmosphere

ABSTRACT: The MKh6401, MKh6403, and MKh6405 mass spectrometers (based on the Bennet model) have been redesigned. The MKh6401 mass spectrometer is used for analyzing the molecular and ionic compositions of gases in a mass range of 1—4 and 12—56 amu. It consists of a miniaturized five-grid analyzer with grid distances fixed by metallic cylinders. A beam of slow electrons emitted by a red-hot cathode ionizes the gases. The analyzer, with the ion source, weighs 2.1 kg and is filled with a mixture of hydrogen, helium, argon, and neon at a pressure of 10^{-5}mm Hg. The MKh6403 mass spectrometer, identical in range to that of the MKh6401,

Card 1/3

APPROVED FOR RELEASE: 03/20/2001 CIA-RDP86-00513R001344010013-4"

"APPROVED FOR RELEASE: 03/20/2001 CIA-RDP86-00513R001344010013-4

ACCESSION NR: AP4003737

permits automatic range shifting. The analyzer, the ion source, and the ion collector are located in a common metallic case. In this model, all the elements of the ion source are in the form of highly transparent grids. The acceleration voltage is from 70 to 380 v, and the frequency automatically shifts from 30 to 8.6 Mc. The MKh6405 mass spectrometer, which contains the basic elements of the MKh6403, is considerably more sensitive than the MKh6403 and is suitable for the analysis of gases containing ionized and neutral particles of 1—2 and 12—36 amu. All three mass spectrometers can work at temperatures ranging from -40 to +40C at low and high humidities and are able to withstand considerable amounts of mechanical overloading. During observations made with the mass spectrometers on 22 June 1959, at altitudes of 90—211 km, the presence of the following ions was recorded: O^+, H_2O^+, NO^+, O_2^+. For purposes of analyzing the neutral components of the upper atmosphere, observations were performed at altitudes higher than 100 km, where the presence of the following were revealed: H, H_2, N, O_1, OH, H_2O, N_2, O_2, Ar, CO_2, and N_2O. Orig. art. has: 6 formulas, 7 figures, and 1 table.

Card 2/3

APPROVED FOR RELEASE: 03/20/2001 CIA-RDP86-00513R001344010013-4"

"APPROVED FOR RELEASE: 03/20/2001 CIA-RDP86-00513R001344010013-4

PAVLENKO, V. A.; OZEROV, L. N.; RAFAL'SON, A. E.; SHUTOV, M. D.

Experimental-production operation of the MKh1201 automatic regulating mass-spectrometer. Zav. lab. 28 no.12:1525-1526 '62. (MIRA 16:1)

1. Spetsial'noye konstruktorskoye byuro analiticheskogo priborostroyeniya AN SSSR.

(Spectrometer)

APPROVED FOR RELEASE: 03/20/2001 CIA-RDP86-00513R001344010013-4"

"APPROVED FOR RELEASE: 03/20/2001 CIA-RDP86-00513R001344010013-4

PENCHKO, Ye.A.; RAFAL'SON, A.E.; TSYMBEROV, M.Ya.

Ionization gauge for the range 1 ÷ 1.10^{-5} torr. Prib. i tekh. eksp. 9 no.1:146-151 Ja-F '64. (MIRA 17:4)

1. Spetsial'noye konstruktorskoye byuro analiticheskogo priborostroyeniya AN SSSR.

APPROVED FOR RELEASE: 03/20/2001 CIA-RDP86-00513R001344010013-4"

"APPROVED FOR RELEASE: 03/20/2001 CIA-RDP86-00513R001344010013-4

PAVLENKO, V.A.; RAFAL'SON, A.E.; TSYMBEROV, M.Ya.; SHUTOV, M.D.

The MKh 1102 high-sensitivity mass-spectrometric leak detector. Prib. i tekh.eksp. 10 no.5:190-194 S-O '65. (MIRA 19:1)

1. Spetsial'noye konstruktorskoye byuro analiticheskogo priborostroyeniya AN SSSR, Leningrad. Submitted Sept.19, 1964.

APPROVED FOR RELEASE: 03/20/2001 CIA-RDP86-00513R001344010013-4"

"APPROVED FOR RELEASE: 03/20/2001 CIA-RDP86-00513R001344010013-4

PAVLENKO, V.A.; RAFAL'SON, A.E.; SHUTOV, M.D.

Series of small-size mass spectrometers for studying the composition of neutral and ionized gases in the upper atmospheric layers. Kosm. issl. 1 no.2:287-295 S-O '63. (MIRA 17:4)

APPROVED FOR RELEASE: 03/20/2001 CIA-RDP86-00513R001344010013-4"

"APPROVED FOR RELEASE: 03/20/2001 CIA-RDP86-00513R001344010013-4

L 34[illegible]-66 [illegible]

ACC NR: AP6010599 SOURCE CODE: UR/0293/66/004/003/0457/0462

AUTHORS: Pavlenko, V. A.; Zarkhin, B. I.; Rafal'son, A. E.; Slutskiy, M. Ye. 54 B

ORG: none

TITLE: High-sensitivity radio-frequency mass spectrometer for investigating the ionic and neutral composition of the upper atmosphere 12

SOURCE: Kosmicheskiye issledovaniya, v. 4, no. 3, 1966, 457-462

TOPIC TAGS: mass spectrometer, upper atmosphere, atmospheric sampling / MKh6407M mass spectrometer

ABSTRACT: An MKh6407M 14 high-sensitivity radio-frequency mass spectrometer 10, intended for analyzing the ionic and neutral composition of the upper atmosphere, is described. The device is characterized by high partial sensitivity, power requirements of 3 w for the ion analysis mode of operation and 5 w for the neutral analysis mode, and small size (2.5 kg). The spectrometer consists of two analyzers, one for the range 1 - 4 amu and the other for 12 - 50 amu, and the electronic unit. The partial sensitivity of the light mass analyzer to H_2 is 3×10^{-11} mm Hg and that of the medium mass analyzer to A is 1×10^{-11} mm Hg. The form of the analyzer is shown in Fig. 1. The basic circuit of the analyzer and a block diagram of the spectrometer are also presented and discussed.

Card 1/2 UDC: 621.384.8:551.535.4

APPROVED FOR RELEASE: 03/20/2001 CIA-RDP86-00513R001344010013-4"

"APPROVED FOR RELEASE: 03/20/2001 CIA-RDP86-00513R001344010013-4

L 24803-66

ACC NR: AP6019599

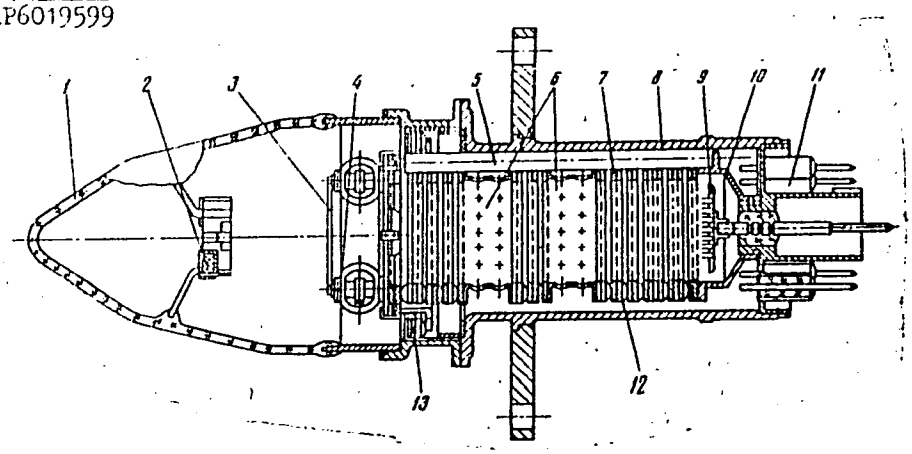

Fig. 1. Analyzer in section. 1 - glass nipple; 2 - getter; 3 - suppressor-grid; 4 - ion source cylinder; 5 - ceramic rod; 6 - drift spaces; 7 - grid; 8 - case; 9 - collector; 10 - collector screen; 11 - base; 12 - packing ring; 13 - securing spring.

Typical spectra are shown, and the basic characteristics of the mass spectrometer are listed. Orig. art. has: 5 figures. [04]

SUB CODE: 04,14/ SUBM DATE: 24Aug65/ ORIG REF: 004/ ATD PRESS: 5030

Card 2/2

APPROVED FOR RELEASE: 03/20/2001 CIA-RDP86-00513R001344010013-4"

"APPROVED FOR RELEASE: 03/20/2001 CIA-RDP86-00513R001344010013-4

L 26976-65

ACCESSION NR: AP5003230

S/0057/65/035/001/0003/0013

AUTHOR: Rafal'son, A.E.

TITLE: The quadrupole mass analyzer and its application to chemical and isotopic analysis

SOURCE: Zhurnal tekhnicheskoy fiziki, v.35, no.1, 1965, 3-13

TOPIC TAGS: mass spectrometer, electrostatic field, quadrupole field, chemical analysis

ABSTRACT: This is a review article concerned with the theory and application of the electrostatic quadrupole mass analyzer (or "mass filter") first described by W.Paul and H.Steinwedel (Zs.Naturforsch.,8,448,1953). The theory of the instrument is briefly derived, and a number of articles are reviewed in which are described applications of the instrument to such diverse problems as chemical analysis, the precise measurement of mass, the determination of residual vapors in high vacuum systems, and the analysis of the upper regions of the atmosphere. The principal characteristics of a number of instruments are tabulated; these instruments range

Card 1/2

APPROVED FOR RELEASE: 03/20/2001 CIA-RDP86-00513R001344010013-4"

"APPROVED FOR RELEASE: 03/20/2001 CIA-RDP86-00513R001344010013-4

L 26976-65

ACCESSION NR: AP5003230

in length from 12.75 cm to 5.82 m and in resolving power from 40 to 20 000. The principal advantages of the quadrupole mass analyzer are its versatility, sensitivity, simplicity of construction, ease of adjustment and the fact that it does not employ a magnetic field. Orig.art.has: 23 formulas, 13 figures and 1 table.

ASSOCIATION: none

SUBMITTED: 20Feb64 ENCL: 00 SUB CODE: NP

NR REF SOV: 000 OTHER: 013

Card 2/2

APPROVED FOR RELEASE: 03/20/2001 CIA-RDP86-00513R001344010013-4"

"APPROVED FOR RELEASE: 03/20/2001 CIA-RDP86-00513R001344010013-4

ACCESSION NR: AP4033128 S/0120/64/000/002/0121/0125

AUTHOR: Averina, A. P.; Levina, G. N.; Lepekhina, V. T.; Rafal'son, A. E.

TITLE: Omegatron mass spectrometer for analyzing residual gas in high-vacuum systems

SOURCE: Pribory* i tekhnika eksperimenta, no. 2, 1964, 121-125

TOPIC TAGS: spectrometer, mass spectrometer, residual gas, high vacuum technique, high vacuum electronic device

ABSTRACT: The development of a new MKh 4301 omegatron mass spectrometer is reported which consists of the following parts: (1) an analyzer; (2) a measuring unit that includes an h-f oscillator, a cathode-ray-tube recording unit, sweep amplifiers, an ion-current amplifier, and a power-supply unit; (3) an electrometric stage of the ion amplifier; (4) a permanent magnet; (5) a permanent-magnet adjuster; and (6) a chassis with a lifting mechanism. The

APPROVED FOR RELEASE: 03/20/2001 CIA-RDP86-00513R001344010013-4"

"APPROVED FOR RELEASE: 03/20/2001 CIA-RDP86-00513R001344010013-4

ACCESSION NR: AP4033128

spectrometer has the following characteristics: measurement range, 2-150 atomic mass units (amu); sensitivity, 10 per torr; resolution, 25 per mass 25; pressure range, $10^{-5} - 10^{-10}$ torr; relative error in partial-pressure measurement, ± 10%; magnetic field strength, 3,300 oerst; duration of recording, 2, 5, and 10 sec for oscillographic screen, or 3 and 30 min for EPP-09 electron-potentiometer tape; frequency bands of the oscillator, 30-480 kc for manual sweep, or 30-2,800 kc for automatic sweep. Other details given. Orig. art. has: 5 figures and 3 formulas.

ASSOCIATION: SKB Analiticheskogo priborostroyeniya AN SSSR (Special Design Office for Analytical Instruments, AN SSSR)

SUBMITTED: 06May63 DATE ACQ: 11May64 ENCL: 00

SUB CODE: PH, GE NO REF SOV: 001 OTHER: 004

Card 2/2

APPROVED FOR RELEASE: 03/20/2001 CIA-RDP86-00513R001344010013-4"

"APPROVED FOR RELEASE: 03/20/2001 CIA-RDP86-00513R001344010013-4

PAVLENKO, V.A.; RAFAL'SON, A.E.; SLUTSKIY, M.Ye.; TSVEYMEN, G.A.; SHUTOV, M.D.

Radiofrequency mass spectrometer for the analysis of the ionic and molecular composition of the upper layers of the atmosphere. Prib. i tekh. eksp. no.6:89-95 N-D '60. (MIRA 13:12)

1. Spetsial'noye konstruktorskoye byuro analiticheskogo priborostroyeniya.
(Mass spectrometry) (Atmosphere, Upper)

APPROVED FOR RELEASE: 03/20/2001 CIA-RDP86-00513R001344010013-4"

"APPROVED FOR RELEASE: 03/20/2001 CIA-RDP86-00513R001344010013-4

NECHAYEVA, N.M.; RAFAL'SON, A.E.; TSYMBEROV, M.Ya.

Improving the sensitivity of the PTI-6 mass-spectrometric leak detector. Prib. i tekh. eksp. 9 no.5:161-164 S-O '64. (MIRA 17:12)

1. Spetsial'noye konstruktorskoye byuro analiticheskogo priborostroyeniya AN SSSR.

APPROVED FOR RELEASE: 03/20/2001 CIA-RDP86-00513R001344010013-4"

"APPROVED FOR RELEASE: 03/20/2001 CIA-RDP86-00513R001344010013-4

86748

S/120/60/000/006/023/045
E032/E314

9.6150

AUTHORS: Pavlenko, V.A., Rafal'son, A.E., Slutskiy, M.Ye., Tsveyman, G.A. and Shutov, M.D.

TITLE: Radio-frequency Mass Spectrometer for the Analysis of the Ionic and Molecular Composition of the Upper Layers of the Atmosphere

PERIODICAL: Pribory i tekhnika eksperimenta, 1960, No. 6, pp. 89 - 95

TEXT: A brief description is given of a mass spectrometer designed for studying the ionic and molecular composition of the atmosphere. The mass spectrometer incorporates a non-magnetic radio-frequency analyser which separates ions according to mass, depending on the increase in the energy in electrical high-frequency fields. The instrument was designed to record mass spectra in the mass ranges 1-4 and 12-56. The basic circuit of a 5-stage analyser used in the mass spectrometer is shown in Fig. 2. It is based on the selective properties of three-grid assemblies in which the energy of the positive ions having different m/e ratios is increased by different amounts, depending on the value of this ratio. All three

Card 1/7

APPROVED FOR RELEASE: 03/20/2001 CIA-RDP86-00513R001344010013-4"

"APPROVED FOR RELEASE: 03/20/2001 CIA-RDP86-00513R001344010013-4

86748

S/120/60/000/006/023/045
E032/E314

Radio-frequency Mass Spectrometer for the Analysis of the Ionic and Molecular Composition of the Upper Layers of the Atmosphere

plane-parallel grids are kept at a negative accelerating voltage U_p. In addition, the middle grid is given a further high-frequency voltage. Positive ions entering the analyser from the atmosphere are accelerated by U_p and, on entering the high-frequency field, are given different energy increments depending on their mass. The maximum energy increments are received by the so-called "synchronous" ions, which pass through the first grid when the phase of the high-frequency voltage is 46° and the central grid when the field changes sign. The mass of these ions M is given by:

$$M = 0.266U_p/f^2S^2$$

where U_p is the accelerating negative voltage,
f is the frequency in Mc/s, and
S is the distance between the grids in cm.

Card 2/7

APPROVED FOR RELEASE: 03/20/2001 CIA-RDP86-00513R001344010013-4"

"APPROVED FOR RELEASE: 03/20/2001 CIA-RDP86-00513R001344010013-4

86748

S/120/60/000/006/023/045
E032/E314

Radio-frequency Mass Spectrometer for the Analysis of the Ionic and Molecular Composition of the Upper Layers of the Atmosphere

A positive delay voltage U_d ensures that the collector receives only the "synchronous" ions. An increased resolution of the analyser and the minimum level of "harmonic" masses are reached with a number of three-grid stages in series, with the distances between the middle grids corresponding to 5-9-4-7 periods of the high-frequency voltage. The analyser is equipped with a demountable ion source which is enclosed in an evacuated glass envelope. When a molecular analysis is required the glass envelope can be broken by remote control, using a special breaker attached to the device. The gas entering the analyser is ionised in the ion source by electrons emitted by a hot cathode and the ions are extracted by two grids kept at a small negative voltage. Single-row grids of tungsten wire, 12 μ in diameter, wound with a step of 0.4 mm, were used in the analyser. The power consumed by the cathode did not exceed 0.75 W.

Card 3/7

APPROVED FOR RELEASE: 03/20/2001 CIA-RDP86-00513R001344010013-4"

"APPROVED FOR RELEASE: 03/20/2001 CIA-RDP86-00513R001344010013-4

86748

S/120/60/000/006/023/045
E032/E314

Radio-frequency Mass Spectrometer for the Analysis of the Ionic and Molecular Composition of the Upper Layers of the Atmosphere

The instrument has the following characteristics:

1. Mass range I) 1 - 4, II) 12 - 56
2. Resolution (full width at full height) 50
3. Range of working pressures in the analyser in the case of the analysis of molecular composition $10^{-4} - 10^{-6}$ mm Hg
4. Partial sensitivity in the analysis of molecular composition (argon) $5 \cdot 10^{-9}$ mm Hg
5. Duration of 1 cycle of automatic sweep through the mass range 3 sec

Card 4/7

APPROVED FOR RELEASE: 03/20/2001 CIA-RDP86-00513R001344010013-4"

"APPROVED FOR RELEASE: 03/20/2001 CIA-RDP86-00513R001344010013-4

86748

S/120/60/000/006/023/045
E032/E314

Radio-frequency Mass Spectrometer for the Analysis of the Ionic and Molecular Composition of the Upper Layers of the Atmosphere

6. Dynamic range of ion current amplifier	10^5
7. Supply voltage	27.5 V ± 10%
8. Power consumed	
a) molecular analyser	6 W
b) ion analyser	5.3 W
9. Working temperature range	-40 to +40 °C
10. Dimensions:	
measuring block of the analyser (without ion source)	210 x 90 x 70 mm^3
ion source	ℓ = 270 mm, Ø 50 mm ℓ = 140 mm, Ø 50 mm
11. Weight of measuring block	1.2 kg
12. Weight of analyser with the electrometric stage and ion source	2.1 kg
13. Specific weight of measuring block	1.2 "

Card 5/7

APPROVED FOR RELEASE: 03/20/2001 CIA-RDP86-00513R001344010013-4"

"APPROVED FOR RELEASE: 03/20/2001 CIA-RDP86-00513R001344010013-4

86748

S/120/60/000/006/023/045
E032/E314

Radio-frequency Mass Spectrometer for the Analysis of the Ionic and Molecular Composition of the Upper Layers of the Atmosphere

Basic circuits are given of the high-frequency oscillator (Fig. 5), sawtooth voltage generator (Fig. 6), switching circuit (Fig. 7) and DC converter (Fig. 8). These circuits are partly transistorised and employ miniaturised components (see above table for dimensions). All the input voltages are stabilised to within ± 0.2%, when the supply voltage changes by ± 10%. The mass spectrometer feeds into the telemetric system the following data:

1) voltage at the outputs of the ion current amplifier (mass spectrum);
2) high-frequency voltage;
3) emission current of the cathode in the ion source, and
4) supply voltage (27.5 V).

Card 6/7

APPROVED FOR RELEASE: 03/20/2001 CIA-RDP86-00513R001344010013-4"

"APPROVED FOR RELEASE: 03/20/2001 CIA-RDP86-00513R001344010013-4

86748

S/120/60/000/006/023/045
E032/E314

Radio-frequency Mass Spectrometer for the Analysis of the Ionic and Molecular Composition of the Upper Layers of the Atmosphere

Instruments of this type were used on rockets to study the ionic and molecular composition of the atmosphere. There are 8 figures and 5 references: 2 Soviet and 3 English.

ASSOCIATION: Spetsial'noye konstruktorskoye byuro analiticheskogo priborostroyeniya (Special Design Bureau for Analytical Instrument Construction)

SUBMITTED: October 15, 1959

Card 7/7

APPROVED FOR RELEASE: 03/20/2001 CIA-RDP86-00513R001344010013-4"

"APPROVED FOR RELEASE: 03/20/2001 CIA-RDP86-00513R001344010013-4

RAFAL'SON, A.G., inzh.

Rewinding an induction motor with increased air gap. Energetik 6 no. 1:27-28 Ja '58. (MIRA 11:8)
(Electric motors, Induction)

APPROVED FOR RELEASE: 03/20/2001 CIA-RDP86-00513R001344010013-4"

"APPROVED FOR RELEASE: 03/20/2001 CIA-RDP86-00513R001344010013-4

L 14534-63 EWT(1)/BDS AFFTC/ASD/SSD

ACCESSION NR: AP3004903 S/0120/63/000/004/0118/0119

AUTHOR: Belov, N. S.; Bronshteyn, A. M.; Ozerov, L. N.; Rafal'son, A. E. 55

TITLE: Electron multiplier with magnetic focusing for a rapid-action mass spectrometer with time-of-flight ion separation

SOURCE: Pribory* i tekhnika eksperimenta, no. 4, 1963, 118-119

TOPIC TAGS: electron multiplier, mass spectrometer, magnetic focusing, time-of-flight separation, rapid-action mass spectrometer, ion separation

ABSTRACT: An electron multiplier for use in registering small pulsed currents of a rapid-action time-of-flight mass spectrometer is described. The multiplier uses crossed electric and magnetic fields to focus secondary electrons from dynode to dynode (see Fig. 1 of Enclosure). A photograph of the device is shown in Fig. 2. The potential difference between stages of the multiplier is 260 v, and field strength is 4350 v/cm. Uniform electric field distribution is achieved by positioning the dynodes in 0.6-mm steps. A magnetic field of 410 oe is produced by a permanent magnet. Two models with 15 and 19 stages, respectively, were studied. Ion current was produced by a rapid-action mass spectrometer with an ion source capable of pulsed and constant-current operation. The mean amplification factor,

Card 1/4

APPROVED FOR RELEASE: 03/20/2001 CIA-RDP86-00513R001344010013-4"

"APPROVED FOR RELEASE: 03/20/2001 CIA-RDP86-00513R001344010013-4

L 14534-63

ACCESSION NR: AP3004903

determined as the ratio of input and output current ratios, was 1.2×10^5 for the 15-stage multiplier and 4×10^6 for the 19-stage multiplier. Output pulse voltage was a linear function of gas pressure. Daily operation of the multipliers using gas and hydrocarbon mixtures with periodic heating to 150—200C and periodic exposure to the atmosphere did not lead to any substantial change in the amplification factor. Disassembly, cleaning, and reassembly with full restoration of the original parameters were easily accomplished. Orig. art. has: 3 figures.

ASSOCIATION: SKB Analiticheskogo priborostroyeniya AN SSSR (SKB of Analytical Instrument Construction, AN SSSR)

SUBMITTED: 03Sep62 DATE ACQ: 28Aug63 ENCL: 02

SUB CODE: PH, SD NO REF SOV: 001 OTHER: 003

Card 2/42

APPROVED FOR RELEASE: 03/20/2001 CIA-RDP86-00513R001344010013-4"

"APPROVED FOR RELEASE: 03/20/2001 CIA-RDP86-00513R001344010013-4

ACCESSION NR: AP4018381 S/0120/64/000/001/0146/0151

AUTHOR: Penchko, Ye. A.; Rafal'son, A. E.; Tsy*mberov, M. Ya.

TITLE: Ionization manometer for 1 to 10^{-5} torr range

SOURCE: Pribory* i tekhnika eksperimenta, no. 1, 1964, 146-151

TOPIC TAGS: manometer, ionization manometer, dismountable manometer, wide-range vacuumeter, vacuumeter

ABSTRACT: An improvement of Ye. A. Penchko's ionization gauge consisting of a cathode and three parallel disks (anode-collector cross-fields) is described (see PTE, 1961, no. 1, p. 170) which permits easy dismemberment in case of a cathode replacement. Design details are reported. Anode-collector voltage, 216 v; cathode-collector voltage, 68 v; cathode emission current, 100 microamp; heater voltage, 1.1 v; heater current, 3 amp. A special vacuumeter (electric circuit diagram presented) is used for supplying the gauge and for measuring the

Card 1/2

APPROVED FOR RELEASE: 03/20/2001 CIA-RDP86-00513R001344010013-4"

"APPROVED FOR RELEASE: 03/20/2001 CIA-RDP86-00513R001344010013-4

ACCESSION NR: AP4018381

ion current. It is claimed that, with supply-voltage variations of ± 15% and a pressure within the $1 - 10^{-5}$ torr range, the emission current varies only to within ± 2%. It is reported that the instrument was in actual operation for over 500 hrs with no cathode burnout, leak, or other trouble. Orig. art. has: 6 figures and 3 formulas.

ASSOCIATION: SKB Analiticheskogo priborostroyeniya AN SSSR (SKB of Analytical Instrument Designing, AN SSSR)

SUBMITTED: 22Feb63 DATE ACQ: 18Mar64 ENCL: 00

SUB CODE: PH NO REF SOV: 002 OTHER: 001

Card 2/2

APPROVED FOR RELEASE: 03/20/2001 CIA-RDP86-00513R001344010013-4"

"APPROVED FOR RELEASE: 03/20/2001 CIA-RDP86-00513R001344010013-4

BELOV, N.S.; BRONSHTEYN, A.M.; OZEROV, L.N.; RAFAL'SON, A.E.

Electron multiplier tube with magnetic focusing for a high-speed mass spectrometer with separation of ions in flight. Prib. i tekh. eksp. 8 no.4:118-119 Jl-Ag '63. (MIRA 16:12)

1. Spetsial'noye konstruktorskoye byuro analiticheskogo priborostroyeniya AN SSSR.

APPROVED FOR RELEASE: 03/20/2001 CIA-RDP86-00513R001344010013-4"

"APPROVED FOR RELEASE: 03/20/2001 CIA-RDP86-00513R001344010013-4

SOV-120-58-3-1/33

AUTHORS: Pavlenko, V. A., Rafal'son, A.E., Shereshevskiy, A. M.

TITLE: Industrial Mass-Spectrometers : Manufacture and New Developments (A Review) (Promyshlennyye mass-spektrometry : proizvodstvo i novyye razrabotki (Obzor))

PERIODICAL: Pribory i Tekhnika Eksperimenta, 1958, Nr 3, pp 3-15 (USSR)

ABSTRACT: A review is given of the mass-spectrometers at present manufactured in the Soviet Union. The classification code employed is as follows:

Types of Mass-Spectrometer	Code
For chemical composition analysis	MKh
For isotopic composition analysis	MI
High resolution instruments	MV
Method of ion separation	
Homogeneous magnetic field	1
Non-homogeneous magnetic field	2
Reserve	3
Magneto-dynamic	4
Time of flight	5
Radio frequency	6

Card 1/11

APPROVED FOR RELEASE: 03/20/2001 CIA-RDP86-00513R001344010013-4"

"APPROVED FOR RELEASE: 03/20/2001 CIA-RDP86-00513R001344010013-4

SOV-120-58-3-1/33

Industrial Mass-Spectrometers: Manufacture and New Developments (A Review)

Application	
Indicators	1
Control of manufacture	2
Laboratory studies	3
Special instruments	4

The following is an example of the code. MI 1305 means that the mass-spectrometer is used for analysis of isotopic composition (MI), uses a homogeneous magnetic field (1), is designed for laboratory studies (3) and is a model Nr 5 (05). The characteristics of 11 mass spectrometers are given.

MI 1301 This instrument is designed for analysis of isotopic composition of gases and easily vaporised substances. Its characteristics are as follows:

Card 2/11

APPROVED FOR RELEASE: 03/20/2001 CIA-RDP86-00513R001344010013-4"

"APPROVED FOR RELEASE: 03/20/2001 CIA-RDP86-00513R001344010013-4

Industrial Mass-Spectrometers: Manufacture and New Developments (A Review)

MI 1301

Mass range	2÷400
Resolving power	300
Radius of the central trajectory of the ion beam	200 mm
Relative error in isotopic composition analysis:	
(a) single beam measurement	±1%
(b) double beam measurement	±0.2%
Sensitivity	0.001%
Maximum analyser magnetic field	7000 oersted
Range of accelerating voltage	2÷3 kV
Minimum ion beam measurable (1 amplifier)	5×10^{-14} amp
Minimum ion beam measurable (2 amplifiers)	5×10^{-15} amp
Time constant of ion beam amplifiers	1 sec
Warming-up time	2-3 hours
Dimensions	22 x 18 x 9 m

MI 1303 This instrument is designed for analysis of isotopic composition for gases and vapours of liquids and solids. Its characteristics are as follows:

APPROVED FOR RELEASE: 03/20/2001 CIA-RDP86-00513R001344010013-4"

"APPROVED FOR RELEASE: 03/20/2001 CIA-RDP86-00513R001344010013-4

SOV-120-58-3-1/33

Industrial Mass-Spectrometers: Manufacture and New Developments (A Review)

MI 1303

Mass range	1÷250
Resolving power	300
Radius of central trajectory of ion beam	200 mm
Relative error in analysis of isotopic composition	±1%
Sensitivity	0.01%
Maximum magnetic field of analyser	6000 oersted
Accelerating voltage	3, 4, 5 kV
Minimum measurable ion current	5×10^{-15} amp
Error of mass number indicator	±0.4
Time constant of ion current amplifier	1 sec
Warming-up time	2-3 hours
Dimensions	26 x 18 x 9.6 m

MI 1305 This instrument is designed for the same purposes as the preceding two spectrometers and replaces them. Its characteristics are as follows:

Card 4/11

APPROVED FOR RELEASE: 03/20/2001 CIA-RDP86-00513R001344010013-4"

"APPROVED FOR RELEASE: 03/20/2001 CIA-RDP86-00513R001344010013-4

SOV-120-58-3-1/33

Industrial Mass-Spectrometers: Manufacture and New Developments (A Review)

MI 1305

Mass range	1÷400
Resolving power	300
Radius of central trajectory of ion beam	200 mm
Relative error in analysis of isotopic composition:	
(a) single beam measurements	±1%
(b) double beam measurements	±0.2%
Sensitivity	0.001%
Minimum current	5×10^{-15} amp
Time constant of ion beam amplifier	1 sec
Warming-up time	2-3 hours
Dimensions	26 x 18 x 9.5 m

MKh 1302 This instrument is designed for analysis of isotopic and molecular composition of gases and easily vapourised substances. Its characteristics are as follows:

Card 5/11

APPROVED FOR RELEASE: 03/20/2001 CIA-RDP86-00513R001344010013-4"

"APPROVED FOR RELEASE: 03/20/2001 CIA-RDP86-00513R001344010013-4

SOV-120-58-3-1/33

Industrial Mass-Spectrometers: Manufacture and New Developments (A Review)

MKh 1302

Mass range	1÷4, 12÷80
Resolving power	80
Radius of central trajectory of ion beam	100 mm
Relative error in analysis of molecular composition	±2%
Sensitivity	0.02%
Maximum magnetic field of analyser	5500 oersted
Accelerating voltage	800 V
Maximum sensitivity of ion beam amplifier	5×10^{-14} amp
Time constant of ion beam amplifier	1 sec
Warming-up time	2 hours
Dimensions	12 x 8.5 x 18 m

MKh 1303 This instrument is designed for analysis of molecular and isotopic composition of gaseous, liquid, and solid mixtures with vapour pressure greater than 0.5 mm Hg and at a temperature not greater than 300°C. Its characteristics are as follows:

Card 6/11

APPROVED FOR RELEASE: 03/20/2001 CIA-RDP86-00513R001344010013-4"

"APPROVED FOR RELEASE: 03/20/2001 CIA-RDP86-00513R001344010013-4

SOV-110-5-5-1/22

Industrial Mass-Spectrometers: Manufacture and New Developments (A Review)

MKh 1303

Mass range	1÷300
Resolving power	400
Radius of central trajectory of ion beam	200 mm
Relative error in analysis of molecular composition	±2%
Sensitivity	0.002%
Accelerating voltage	2 and 4 kV
Minimum measured ion current	5×10^{-15} amp
Time constant of ion current amplifier	1 sec
Stability of the temperature of ionisation chamber of the ion source	$\pm 1^{\circ}C$

MV 2301 This instrument is designed for isotopic and molecular composition of gases and easily vapourised substances. Its characteristics are as follows:

Card 7/11

APPROVED FOR RELEASE: 03/20/2001 CIA-RDP86-00513R001344010013-4"

"APPROVED FOR RELEASE: 03/20/2001 CIA-RDP86-00513R001344010013-4

SOV-120-58-3-1/25

Industrial Mass-Spectrometers: Manufacture and New Developments (A Review)

MV 2301

Mass range	1÷100
Resolving power	5000
Radius of central trajectory of ion beam	200 mm
Sensitivity	0.0005%
Maximum analysing magnetic field	5000 oersted
Accelerating voltage	2.5 and 5 kV
Minimum measured ion current	5×10^{-15} amp
Time constant of ion current amplifier	1.5 sec
Warming up time	3 hours
Dimensions	19 x 18.9 x 12.85 m

MI 1101 This instrument is designed for rapid analysis of isotopic composition of alkali metals. Its characteristics are as follows:

Card 3/11

APPROVED FOR RELEASE: 03/20/2001 CIA-RDP86-00513R001344010013-4"

"APPROVED FOR RELEASE: 03/20/2001 CIA-RDP86-00513R001344010013-4

SOV-120-58-3-1/33

Industrial Mass-Spectrometers: Manufacture and New Developments (A Review)

MI 1101

Mass range (depending on the model)	4÷40
Resolving power (depending on the model)	25÷40
Relative error	±3%
Radius of central trajectory of ion beam	100 mm
Intensity of analysing magnetic field	1350÷2300 oersted
Working pressure in the analyser chamber	5×10^{-5} mm
Accelerating voltage	0.6÷1.2 kV
Warming-up time	1 hour
Dimensions	8.6 x 6.5 x 5.3 m

MI 1306 This instrument is designed for analysis of isotopic composition of micro-quantities and micro-concentrations of solid substances. Its characteristics are as follows:

Mass range	1÷400
Resolving power	600÷700
Radius of central trajectory of ion beam	300 mm
Minimum quantity of analysed substance	$\sim 10^{-8}$ g
Minimum content of analysed component	$\sim 10^{-4}$%
Minimum measured ion current	$\sim 10^{-17}$ amp

Card 9/11

APPROVED FOR RELEASE: 03/20/2001 CIA-RDP86-00513R001344010013-4"

"APPROVED FOR RELEASE: 03/20/2001 CIA-RDP86-00513R001344010013-4

SOV-120-58-3-1/33

Industrial Mass-Spectrometers: Manufacture and New Developments (A Review)

MKh 5201 This instrument is designed for continuous analysis and recording of six different components of a complex gaseous mixture in industrial conditions:

Mass range	12÷56
Resolving power	40
Sensitivity	0.05%
Relative error	±5%
Dimensions	16 x 8 x 6 m

MKh 6401 This instrument is designed for analysis of molecular chemical composition of gases in the mass range 2-60. Its characteristics are as follows:

Mass range	2÷8 and 12÷56
Resolving power	~45
Sensitivity	0.1%
Relative error	±5%
Frequency in the first range	5 Mc/s
Frequency in the second range	15 Mc/s
Working pressure in analyser	2×10^{-5} mm
Accelerating voltage	80÷400

Card 10/11

APPROVED FOR RELEASE: 03/20/2001 CIA-RDP86-00513R001344010013-4"

"APPROVED FOR RELEASE: 03/20/2001 CIA-RDP86-00513R001344010013-4

SOV-120-58-3-1/33

Industrial Mass-Spectrometers: Manufacture and New Developments (A Review)

A magneto-dynamic mass spectrometer.
This instrument is designed for analysis of isotopic and chemical composition of gases. The ions are separated according to the time of flight along spiral trajectories in a uniform magnetic field. The mass range is 2-40, the resolving power is 5000, and the sensitivity 0.1%. There are 14 figures.

ASSOCIATION: Vsesoyuznoye nauchno-issledovatel'skoye konstruktorskoye byuro analiticheskogo priborostroyeniya (State All-Union Constructor Bureau for Analytical Instruments)

SUBMITTED: December 30, 1957.

1. Mass spectrum analyzers--Production 2. Mass spectrum analyzers--Design 3. Mass spectrum analyzers--Classification 4. Mass spectrum analyzers--Applications

Card 11/11

APPROVED FOR RELEASE: 03/20/2001 CIA-RDP86-00513R001344010013-4"

"APPROVED FOR RELEASE: 03/20/2001 CIA-RDP86-00513R001344010013-4

L 15681-65 EWT(d) Po-4/Pq-4/Pg-4/Pk-4/Pl-4 ASD-3/AFFTC/ESD-3/AEDC(b)

ACCESSION NR: AP4047482 S/0120/64/000/005/0161/0164

AUTHOR: Nechayeva, N. M.; Rafal'son, A. E.; Tsy*mberov, M. Ya.

TITLE: Enhancing the sensitivity of a PTI-6 mass-spectrometric leak detector

SOURCE: Pribory* i tekhnika eksperimenta, no. 5, 1964, 161-164

TOPIC TAGS: leak detector, mass spectrometric leak detector / PTI-6 leak detector

ABSTRACT: The sensitivity of a PTI-6 leak detector is limited (to about 5×10^{-7} lmc/sec) by the instability of the residual peak of He ion current which may reach values as high as 50—100 mv. The use of two (instead of one) type NVO-40 diffusion oil-vapor pumps is suggested to increase the sensitivity of detectors currently employed in industrial installations. Experiments have shown that the addition of the second pump results in a 50—100-times higher sensitivity (1—2 mv) because the minimum reliable reading does not vary with decreasing the

Card 1/2

APPROVED FOR RELEASE: 03/20/2001 CIA-RDP86-00513R001344010013-4"

"APPROVED FOR RELEASE: 03/20/2001 CIA-RDP86-00513R001344010013-4

L 15681-65
ACCESSION NR: AP4047482

heater power but is determined only by the instability of the d-c amplifier (±1 mv). Instructions for remodeling the detector are supplied. Orig. art. has: 5 figures and 2 tables.

ASSOCIATION: SKB Analiticheskogo priborostroyeniya AN SSSR (Special Design Office for Analytical Instruments, AN SSSR)

SUBMITTED: 01Nov63 ENCL: 00

SUB CODE: ME NO REF SOV: 001 OTHER: 002

Card 2/2

APPROVED FOR RELEASE: 03/20/2001 CIA-RDP86-00513R001344010013-4"

"APPROVED FOR RELEASE: 03/20/2001 CIA-RDP86-00513R001344010013-4

PAVLENKO, V.A.; RAFAL'SON, A.Ye.; SHERESHEVSKIY, A.M.

Industrial mass spectrometers (manufacture and new designs). Prib. i tekh. eksp. no.3:3-15 My-Je '58. (MIRA 11:6)

1.Gosudarstvennoye soyuznoye konstruktorskoye byuro analiticheskogo priborostroyeniya.

(Mass spectrometry)

APPROVED FOR RELEASE: 03/20/2001 CIA-RDP86-00513R001344010013-4"

"APPROVED FOR RELEASE: 03/20/2001 CIA-RDP86-00513R001344010013-4

Category : Human and Animal Physiology, Blood

Abs. Jour. : Ref Zhur - Biol., No. 2, 1959, No. 7948

Author : Rafal'son D.; Ashkinazi L.; Diakanovich S.

Title : The Role of the Central Nervous System in the Mechanism of Blood Regeneration in Donors.

Orig Pub. : V sb.: Aktual'n. vopr. pereliv. krovi. Vyp. 5, Leningrad, 1957, 14--21

Abstract : The study was performed on 175 donors between the ages of 21 and 50 who had been donors for at least 3 years. Normal regeneration of blood was observed in 100 donors after they had given blood; in 75, regeneration was diminished. According to type of higher nervous activity, the donors were designated as strong, weak and intermediate. Bromine and strychnine were used to alter the reaction of the organism to giving blood. When Br was given (30 ml of a 3% solution 1 hour before blood was taken), in those donors with reduced blood regeneration the fall

Card: 1/4

APPROVED FOR RELEASE: 03/20/2001 CIA-RDP86-00513R001344010013-4"

"APPROVED FOR RELEASE: 03/20/2001 CIA-RDP86-00513R001344010013-4

Country : USSR T
Category : Human and Animal Physiology, Blood

Abs. Jour. : Ref Zhur - Biol., No. 2, 1959, No. 7948

Author :
Institution. :
Title :

Orig. Pub. :

Abstract : in Hb, eythrocyte and reticulocyte levels immediately after 280 ml of blood was taken and five days later was negligible in comparison with that seen in the donors which did not receive Br. The same result was observed in donors with normal and retarded regeneration after 400 ml of blood was taken. Donors with retarded blood regeneration which did not receive Br showed a sudden drop in red blood indices after losing 280 ml of blood. Strychnine exerted a regulatory effect on donors

Card: 2/4

APPROVED FOR RELEASE: 03/20/2001 CIA-RDP86-00513R001344010013-4"

"APPROVED FOR RELEASE: 03/20/2001 CIA-RDP86-00513R001344010013-4

Country : USSR T
Category : Human and Animal Physiology, Blood

Abs. Jour. : Ref Zhur - Biol., No. 2, 1959, No. 7948

Author :
Institut. :
Title :

Orig. Pub. :

Abstract : poor, it is useful to prescribe Br in combination with Fe preparations.--M.I.Yershovich

Card: 4/4

APPROVED FOR RELEASE: 03/20/2001 CIA-RDP86-00513R001344010013-4"

"APPROVED FOR RELEASE: 03/20/2001 CIA-RDP86-00513R001344010013-4

KOTOVSHCHIKOVA, M.A.; NIKOLAYEVA, L.K.; IVANOVA, N.M.; RAFAL'SON, D.I.; VEYKHER, Z.F.; ROZANOVA, L.M.

Effect of taking small and moderate doses of bone marrow on the body of the donor. Report No.2: Effect of taking bone marrow on some factors of the blood coagulation system and natural immunity. Probl. gemat. i perel. krovi no.10:35-40 '63 (MIRA 18:1)

1. Iz Leningradskogo nauchno-issledovatel'skogo ordena Trudovogo Krasnogo Znameni instituta perelivaniya krovi (dir.- dotsent A.D. Belyakov, nauchnyy rukovoditel' - chlen-korrespondent AMN SSSR prof. A.N. Filatov).

APPROVED FOR RELEASE: 03/20/2001 CIA-RDP86-00513R001344010013-4"

"APPROVED FOR RELEASE: 03/20/2001 CIA-RDP86-00513R001344010013-4

RAFAL'SON, D.I., starshiy nauchnyy sotrudnik; VEYKHER, Z.F., nauchnyy sotrudnik

Improvement in the method of analysis of venous blood in the mass investigation of donors. Akt.vop.perel.krovi no.7:69-73 '59. (MIRA 13:1)

1. Donorskiy otdel Leningradskogo instituta perelivaniya krovi (rukovoditel' temy - prof. L.G. Bogomolova).
(BLOOD--ANALYSIS AND CHEMISTRY)

APPROVED FOR RELEASE: 03/20/2001 CIA-RDP86-00513R001344010013-4"

"APPROVED FOR RELEASE: 03/20/2001 CIA-RDP86-00513R001344010013-4

RAFAL'SON, D.I.; KULAKOVA, M.N.; KRUTOGOLOVA, F.M.; TETERINA, Z.K.; LAZAREVA, M.S.; ORLOVA, N.N.; BARANOVA, L.P.; NAZAREVSKAYA, O.V.; SHIBA, Ye.P.; MEL'CHENKO, K.M.; ZELENKOVSKAYA, A.N.

Significance of blood transfusion in the transmission of epidemic hepatitis. Zhur.mikrobiol., epid. i immun. 42 no.9:81-85 S '65. (MIRA 18:12)

1. Leningradskiy institut perelivaniya krovi, 1-ya, 2-ya i 3-ya gorodskiye stantsii perelivaniya krovi i Leningradskaya gorodskaya sanitarno-epidemiologicheskaya stantsiya. Submitted February 29, 1964.

APPROVED FOR RELEASE: 03/20/2001 CIA-RDP86-00513R001344010013-4"