"APPROVED FOR RELEASE: Tuesday, August 01, 2000 CIA-RDP86-00513R001344

S/103/61/022/002/010/015
B019/B060

9.2530 (also 1031)

AUTHORS: Rakov, M. A., Sinitskiy, L. A. (L'vov)

TITLE: Magnetic modulator of the second harmonic with a feed from a quadratic shift diagram

PERIODICAL: Avtomatika i telemekhanika, v. 22, no. 2, 1961, 238-242

TEXT: The construction of magnetic modulators of the second harmonic in which no filters are used in control and exciting circuits, is regarded as a problem of major importance. The second harmonic in the signal circuit can be eliminated by feeding the excitation coils of the magnetic modulator by two current sources, whose voltages are shifted mutually by 90°. The odd harmonics in the control and output coil are, however, not eliminated by this circuit, and it is, therefore necessary to make use of a circuit with four cores (Fig. 1). The two voltages whose frequencies are mutually shifted by 90° are obtained by using a frequency division. A phase shift of 180° is no problem today. If these two voltages are each divided by a frequency divider into two voltages with half the frequency, these two voltages will then have a relative phase relation of 90°. The diagram

Card 1/4

APPROVED FOR RELEASE: Tuesday, August 01, 2000 CIA-RDP86-00513R0013441

"APPROVED FOR RELEASE: Tuesday, August 01, 2000 CIA-RDP86-00513R001344

89179

S/103/61/022/002/010/015
B019/B060

Mag etic modulator of the ...

shown in Fig. 2 is indicated as the frequency divider, and it is said to offer the advantage of doing without separate d-c sources. Fig. 3 is a graph illustrating the stability ranges of the frequency division of this circuit in the dimensionless coordinates $\mathcal{E} = U_{1m}/w_1 S_\omega B_s$ and $k = R_1 w_2^2/R_H w_1^2$, where $m = R_H C$. The stable ranges presented in this figure have been obtained by generalizing experimental results. The chief advantage of the frequency divider considered here is the fact that the output voltage practically contains no even harmonic. It is especially important that this property does not depend on the form of the feed voltage. Thus, the use of such a frequency divider makes it possible to appreciably reduce requirements as to the form of the feed voltage, and, furthermore, excludes filters in this circuit. Fig. 4 shows the diagram of a modulator with a current feed from a quadratic shift circuit. The circuit was set up on the basis of foregoing findings. The voltage amplification factor amounts to 600 and the power fluctuation in the case of the feed voltage fluctuating by about ± 10% amounts to 10^{13} watts. There are 4 figures and 6 references: 5 Soviet-bloc.

Card 2/4

APPROVED FOR RELEASE: Tuesday, August 01, 2000 CIA-RDP86-00513R0013441

"APPROVED FOR RELEASE: Tuesday, August 01, 2000 CIA-RDP86-00513R001344

S/103/61/022/002/010/015
B019/B060

Magnetic modulator of the ...

SUBMITTED: August 30, 1960

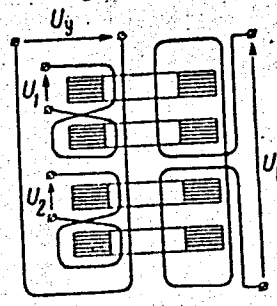

Fig. 1

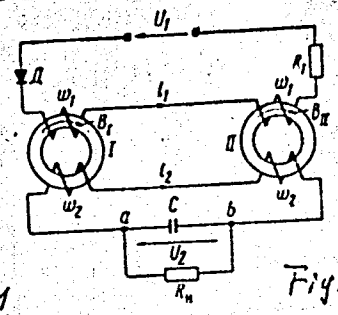

Fig. 2

Legend to Fig. 1: Scheme of the coil system of a modulator of the second harmonic with a feed from a device of the quadratic shift.
Legend to Fig. 2: Magnetic frequency divider $n_1 = 500$, $n_2 = 2000$.

Card 3/4

APPROVED FOR RELEASE: Tuesday, August 01, 2000 CIA-RDP86-00513R0013441

"APPROVED FOR RELEASE: Tuesday, August 01, 2000 CIA-RDP86-00513R001344

S/103/61/022/002/010/015
B019/B060

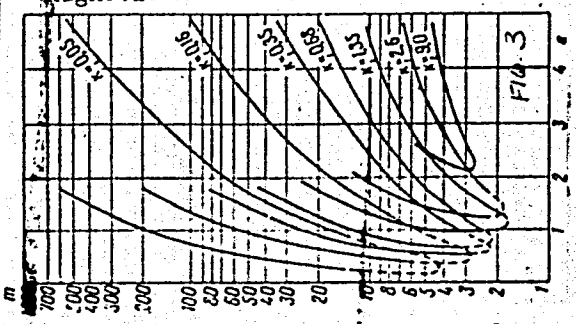

Legend to Fig. 3:
Range of stability of the frequency divider.

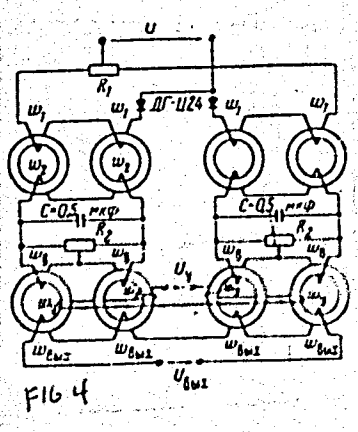

Legend to Fig. 4: Circuit of the modulator feeding from a quadratic shift diagram.
w_1 = 500, w_2 = 1500, w_B = 500, and w_y = 2500, w_{BUX} = 1500.

Card 4/4

APPROVED FOR RELEASE: Tuesday, August 01, 2000 CIA-RDP86-00513R0013441

"APPROVED FOR RELEASE: Tuesday, August 01, 2000 CIA-RDP86-00513R001344

31269
S/103/61/022/011/010/014
D271/D306

9,2530

AUTHORS: Rakov, M. A., and Sinitskiy, L. A. (L'vov)

TITLE: Some properties of second harmonic magnetic modulators with single-phase and two-phase supply

PERIODICAL: Avtomatika i telemekhanika, v. 22, no. 11, 1961, 1513-1520

TEXT: Single-phase and two-phase modulators are analyzed in order to compare their amplification and time constants and to show the advantages of two-phase supply system. Because of the 4 n order of harmonics present in the control circuit, a two-phase modulator must not be identified with a single-phase modulator operating with even harmonic suppression. A two-phase type supplied by quadrature voltages does not need a filter in the control circuit. It is to be compared with a single-phase type provided with a simple choke in the control circuit as both types may be regarded as reasonably frequency independent. The circuit of the single-phase modulator is shown in Fig. 1. Assuming sine wave current and an approximated

Card 1/10

APPROVED FOR RELEASE: Tuesday, August 01, 2000 CIA-RDP86-00513R0013441

"APPROVED FOR RELEASE: Tuesday, August 01, 2000 CIA-RDP86-00513R001344

31269
S/105/61/022/011/010/014
D271/D306

Some properties of ...

expression for the dynamic permeability, the equation of the control circuit is

$$\frac{dh_2}{d\theta} + \gamma h_2 + \lambda \frac{d}{d\theta}\left[\frac{h_2}{1 + h_m^2 \sin^2\theta}\right] = \gamma h_o \qquad (5)$$

4

where $h_2 = \frac{w_2 i_2}{H_s l}$; H_s - field strength at which $\mu_{\partial L_o} = \frac{1}{2}\mu_o$; l - mean length of the magnetic path; $\theta = \omega t$; $\gamma = \frac{r}{\omega L}$; $= \lambda \frac{L_o}{L}$; L_o - initial inductance of the control winding; $h_m = \frac{w_1 I_m}{H_s l}$; $h_o = \frac{w_2 U_2}{r H_s l}$. Voltage drop on r is assumed 0 for all harmonics $i_2(h_2)$ with the exception of $h_2^{(o)}$. Eq. (5) splits then into

Card 2/10

APPROVED FOR RELEASE: Tuesday, August 01, 2000 CIA-RDP86-00513R0013441

"APPROVED FOR RELEASE: Tuesday, August 01, 2000 CIA-RDP86-00513R001344

31269
S/103/61/022/011/010/014
D271/D306

Some properties of ...

$$\frac{d}{d\theta}\left(h_2 + \Lambda \frac{h_2}{1 + h_m^2 \sin^2\theta}\right) = 0 \qquad (6)$$

and

$$h_2^{(0)} = h_0 \qquad (7)$$

4

By integrating (6) and solving it for h_2, the expression is found for the second harmonic

$$h_2^{(2)} = -2\frac{\alpha}{\beta}\,\frac{1-\sqrt{1-\alpha^2}}{\beta-\sqrt{1-\alpha^2}}\,h_0 \qquad (10)$$

Card 3/10

APPROVED FOR RELEASE: Tuesday, August 01, 2000 CIA-RDP86-00513R0013441

"APPROVED FOR RELEASE: Tuesday, August 01, 2000 CIA-RDP86-00513R001344

where α and β are functions of λ and h_m. The amplification of the modulator, i.e. the ratio of the EMF of the second harmonic in the output winding to the control voltage is

$$K_{U1} = 8v \frac{1 - \sqrt{1 - \alpha^2}}{h_m^2(\beta - \sqrt{1 - \alpha^2})} \qquad (13)$$

where

$$v = \frac{\omega L_c w_B}{w_2 r}$$

Amplification increases with the choke inductance and reaches maximum when $L \to \infty$; this corresponds to the complete absence of even harmonics in the control circuit. In order to find the time constant Eq. (5) is rewritten in the form of a linear differential equation

APPROVED FOR RELEASE: Tuesday, August 01, 2000 CIA-RDP86-00513R0013441

"APPROVED FOR RELEASE: Tuesday, August 01, 2000 CIA-RDP86-00513R001344

31269
S/103/61/022/011/010/014
D271/D306

Some properties of ...

by introducing a new variable

$$b = \frac{h_2}{1 + h_m^2 \sin^2\theta}$$

The character of transients is fully defined by the solution of a corresponding homogeneous equation; the transient process is found not strictly exponential. If the duration of the transient process is greater than the period of the exciting emf, an approximated expression can be obtained for the time constant $\tau = \frac{L+L_e}{r}$ where $L_e = \rho L_c$ is the equivalent inductance of the control winding which decreases with the choke inductance. The circuit of the two-phase modulator is shown in Fig. 4. Using designations as before and starting with the balance equation of voltages in the control circuit, the authors obtain

Card 5/10

APPROVED FOR RELEASE: Tuesday, August 01, 2000 CIA-RDP86-00513R0013441

"APPROVED FOR RELEASE: Tuesday, August 01, 2000 CIA-RDP86-00513R001344

31269
S/103/61/022/011/010/014
D271/D306

Some properties of ...

$$\frac{2(2 + h_m^2)}{\gamma_0} \frac{d}{d\theta} \left[\frac{h_2}{1 + \frac{h_m^2}{2}\,{}^{2} - \frac{h_m^4}{4} \cos^2 2\theta} \right] + h_2 = h_0 \qquad (21)$$

This leads to a linear differential equation of the first order which is solved by approximating methods, and eventually the expression for the amplification is found as

$$K_{U2} = \frac{8v}{h_m^2 + \frac{8}{h_m^2} + 8} \qquad (27)$$

where

Card 6/10

APPROVED FOR RELEASE: Tuesday, August 01, 2000 CIA-RDP86-00513R0013441

"APPROVED FOR RELEASE: Tuesday, August 01, 2000 CIA-RDP86-00513R001344

31269
S/103/61/022/011/010/014
D271/D306

Some properties of ...

$$v = \frac{\omega L_o w_B}{w_2 \frac{r}{2}}$$

The time constant derived as previously is

$$\tau = 8 \frac{L_o}{r} \frac{2 + h_m^2}{h_m^4 + 8h_m^2 + 8} \qquad (28)$$

and the equivalent inductance of the modulator is

$$L_e = 8L_o \frac{2 + h_m^2}{8 + 8h_m^2 + h_m^4}$$

Card 7/10

APPROVED FOR RELEASE: Tuesday, August 01, 2000 CIA-RDP86-00513R0013441

"APPROVED FOR RELEASE: Tuesday, August 01, 2000 CIA-RDP86-00513R001344

31269
S/103/61/022/011/010/014
D271/D306

Some properties of ...

The comparison of amplifications of both types of modulators shows that their dependence on design parameters is the same; the values of v are the same if ohmic resistance of the choke is neglected. The difference in amplification is due only to terms in h_m; the effect of working conditions is expressed by the factors

4

$$F_1(h_m) = \left[\frac{1 + \frac{h_m^2}{2}}{\sqrt{1 + h_m^2}} - 1\right]\frac{1}{h_m^2} \quad \text{and} \quad F_2(h_m) = \frac{1}{h_m^2 + \frac{8}{h_m^2} + 8}$$

The graphs of both F show that maximum amplification occurs for two-phase supply at a lower value of h_m and the fall of amplification with increasing h_m is more rapid, due to harmonics of 4 n order. A single-phase modulator needs, however, a filter which causes

Card 8/10

APPROVED FOR RELEASE: Tuesday, August 01, 2000 CIA-RDP86-00513R0013441

"APPROVED FOR RELEASE: Tuesday, August 01, 2000 CIA-RDP86-00513R001344

31269
S/103/61/022/011/010/014
D271/D306

Some properties of ...

an increase of the time constant and a voltage drop. If the comparison of time constants, for equal amplifications, is chosen as a quality criterion, a two-phase supply is preferable on account of a much lower time constant. There are 6 figures and 3 Soviet-bloc references.

SUBMITTED: January 21, 1961

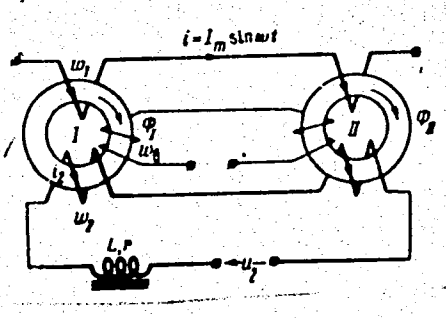

Fig. 1

Card 9/10

APPROVED FOR RELEASE: Tuesday, August 01, 2000 CIA-RDP86-00513R0013441

"APPROVED FOR RELEASE: Tuesday, August 01, 2000 CIA-RDP86-00513R001344

RAKOV, M.A.

Circuits of phase-sensitive transistor rectifiers. Avtom.kont.i izm.tekh. no.6:105-108 '62. (MIRA 16:2)
(Electric current rectifiers) (Transistor circuits)
(Electric power supply to apparatus)

APPROVED FOR RELEASE: Tuesday, August 01, 2000 CIA-RDP86-00513R0013441

"APPROVED FOR RELEASE: Tuesday, August 01, 2000 CIA-RDP86-00513R001344

BLAZHKEVICH, B.I.; RAKOV, M.A.

Effect of insulation between the turns of wound cores on their magnetic characteristics. Avtom.kont.i izm.tekh. no.6:125-127 '62. (MIRA 16:2)

(Cores (Electricity)) (Electric coils)

APPROVED FOR RELEASE: Tuesday, August 01, 2000 CIA-RDP86-00513R0013441

"APPROVED FOR RELEASE: Tuesday, August 01, 2000 CIA-RDP86-00513R001344

RAKOV, M.A.

Device for obtaining 90° phase shifts. Avtom.kont.i izm.tekh. no.6:139-143 '62. (MIRA 16:2)

(Phase converters)

APPROVED FOR RELEASE: Tuesday, August 01, 2000 CIA-RDP86-00513R0013441

"APPROVED FOR RELEASE: Tuesday, August 01, 2000 CIA-RDP86-00513R001344

S/106/62/000/008/003/009
A055/A101

9,2560

AUTHOR: Rakov, M.A.

TITLE: Amplitude-phase detectors with power amplification

PERIODICAL: Elektrosvyaz', no. 8, 1962, 20 - 23

TEXT: The author describes amplitude-phase detectors with transistorized switches, permitting both the power amplification and the proportionality between the measured and the output voltage. In these detectors (consisting of two blocks), the phase relationships at the output of the first (mixing) block depend on the amplitude of the measured voltage; on the other hand, the magnitude of the constant component of the load current of the second block (which can be a usual phase detector in relay-type operating conditions) depends on these relationships. Figure 1 shows a detector of the second harmonic. The measured voltage U is added, in the mixer, to the auxiliary voltage of fundamental frequency U_{aux}. The resultant controlling voltage $U_{contr} = U_{aux} + U_x$ is applied to the detecting block Ph.D. The positive and negative parts of the wave U_{contr} differ by the angle $\Delta\varphi$. The value of $\Delta\varphi$ is determined by the relation-

Card 1/3

APPROVED FOR RELEASE: Tuesday, August 01, 2000 CIA-RDP86-00513R0013441

"APPROVED FOR RELEASE: Tuesday, August 01, 2000 CIA-RDP86-00513R001344

S/106/62/000/008/003/009
A055/A101

Amplitude-phase detectors with ....

ship (K) between U_{aux} and U_x, and also by the value of their initial phase-shift. The maximum dependence of $\Delta\varphi$ on K occurs when the initial phase-shift is equal to $\pm\frac{\pi}{2}$. For the dependence of $\Delta\varphi$ on K, the author gives the formula:

$$\Delta\varphi = 2 \arcsin \frac{-1 + \sqrt{1 + 8K^2}}{4K}. \qquad (2)$$

This dependence (represented graphically for $0 \leqslant K \leqslant 0.5$) is sufficiently linear at small values of K. The difference of the durations of the half-waves of the controlling voltage is used for switching the constant voltage U_{const}. The switching system consists of two series-connected keys, one of which is controlled by a voltage of the $\sin \omega t + K \cos 2\omega t$ type, and the other by a voltage $-\sin \omega t + K \cos 2\omega t$. In the absence of the second harmonic, the keys are opened in turn by the voltage of fundamental frequency, and there is no current in the load. In the presence of the second harmonic, there is an angular difference determined by (2), and there are also moments when both keys are open simultaneously; at these moments, a current (determined by U_{const} and the load resistance) flows through the load. The constant component of the voltage at the detector output will be:

Card 2/3

APPROVED FOR RELEASE: Tuesday, August 01, 2000 CIA-RDP86-00513R0013441

"APPROVED FOR RELEASE: Tuesday, August 01, 2000 CIA-RDP86-00513R001344

$$U_{outp} = \frac{\Delta\varphi}{\pi} U_{const} . \quad (3)$$

The detector, while characterized by a good linearity, can also effect a power amplification that is limited, practically, only by the relationship between the controlled and controlling powers used in the switching system. At the end of the article, the author examines in an analogous manner the amplitude-phase detector of the fundamental frequency. There are 6 figures.

SUBMITTED: December 7, 1961

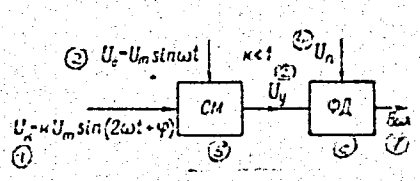

Figure 1: (1) U_x; (2) U_{aux}; (3) U_{contr}; (4) U_{const}; (5) Mixer; (6) Ph.D.; (7) outp.

Card 3/3

APPROVED FOR RELEASE: Tuesday, August 01, 2000 CIA-RDP86-00513R0013441

"APPROVED FOR RELEASE: Tuesday, August 01, 2000 CIA-RDP86-00513R001344

SIMITSKIY, L.A. (L'vov); RAKOV, M.A. (L'vov)

Steady-state processes in magnetic frequency dividers.
Elektrichestvo no.8:26-30 Ag '62. (MIRA 15:7)
(Frequency changers)

RAKOV, M.A.; SIMITSKIY, L.A. [Symyts'kyi, L.A.]

APPROVED FOR RELEASE: Tuesday, August 01, 2000 CIA-RDP86-00513R001

Use of magnetic frequency dividers in obtaining an exact [illegible] phase shift. Dop. AN URSR no.8:1025-1027 '62. (MIRA 18:2)

1. Institut mashinovedeniya i avtomatiki AN UkrSSR.

"APPROVED FOR RELEASE: Tuesday, August 01, 2000 CIA-RDP86-00513R001344

ACCESSION NR: AT4008773 S/3054/63/000/000/0330/0342

AUTHORS: Vorobkevich, V. Yu.; Danilyuk, I. S.; Sinitskiy, L. A.; Rakov, M. A.; Shumkov, Yu. M.

TITLE: Pulse-width modulated phase detector

SOURCE: Pribory* promy*shlennogo kontrolya i sredstva avtomatiki. Doklady* i soobshcheniya. Kiev, 1963, 330-342

TOPIC TAGS: phase detector, pulse width modulation, transistorized phase detector, second harmonic detector, demodulator, transistorized detector, pulse width modulated detector

ABSTRACT: The operating principles and properties of a second-harmonic detector using transistors operating in the switching mode are analyzed. The operation is based on double conversion of the measured signal. The second-harmonic signal is first mixed with a fundamental-frequency reference voltage. The resultant difference in

Card 1/[illegible]

APPROVED FOR RELEASE: Tuesday, August 01, 2000 CIA-RDP86-00513R0013441

"APPROVED FOR RELEASE: Tuesday, August 01, 2000 CIA-RDP86-00513R001344

ACCESSION NR: AT4008773

in the durations of the positive and negative half cycles of the combined signal is a function of both the ratio of the amplitudes of the first and second harmonics and of the phase shift between them. This makes it possible to use as the second conversion stage a circuit similar to an ordinary phase detector with switching transistors and to obtain both proportionality of the conversion and power amplification of the measured signal. The performance of the circuit is analyzed for different harmonic ratios as a function of the circuit parameters. The detector was used as a demodulator in a stabilized dc amplifier developed at the Institut mashinovedeniya i avtomatiki AN UkrSSR (Institute of the Science of Machines and Automation, AN UkrSSR). Orig. art. has: 8 figures and 19 formulas.

ASSOCIATION: Institut mashinovedeniya i avtomatiki AN UkrSSR (Institute of the Science of Machines and Automation, AN UkrSSR)

SUBMITTED: 00 DATE ACQ: 25Jan64 ENCL: 02

SUB CODE: SD NO REF SOV: 000 OTHER: 000

Card 2/2

APPROVED FOR RELEASE: Tuesday, August 01, 2000 CIA-RDP86-00513R0013441

"APPROVED FOR RELEASE: Tuesday, August 01, 2000 CIA-RDP86-00513R001344

ACCESSION NR: AT4017771 S/3037/63/003/000/0448/0458

AUTHOR: Sinitskiy, L. A. (USSR); Rakov, M. A. (USSR)

TITLE: Theory of parametric frequency dividers

SOURCE: International Symposium on Nonlinear Oscillations. Kiev, 1961. Prilozheniya metodov teorii nelineyny*kh kolebaniy k zadacham fiziki i tekhniki (Applying methods of the theory of nonlinear oscillations in problems of physics and technology); trudy* simpoziuma, v. 3. Kiev, Izd-vo AN UkrSSR, 1963, 448-458

TOPIC TAGS: automation, control system, frequency divider, parametric frequency divider, magnetic frequency divider, parametric oscillator

ABSTRACT: The authors point out the need for a method, which, together with shedding light on the physical aspects of the operation of magnetic parametric frequency dividers, would provide a definition of the zones of steady-state operation in division, the values and forms of the output voltage and current, as well as the phase and power ratios in the divider. Available data on this problem is largely of a qualitative nature and does not provide any idea of either the peculiarities of the operation of the dividers or the processes occurring within them. The authors note that in the investigation of another group of magnetic devices - magnetic amplifiers - the introduction of the concept of the ideal magnetization

Card 1/2

APPROVED FOR RELEASE: Tuesday, August 01, 2000 CIA-RDP86-00513R0013441

"APPROVED FOR RELEASE: Tuesday, August 01, 2000 CIA-RDP86-00513R001344

ACCESSION NR: AT4017771

curve was found to be especially advantageous, since it reflects the properties of modern magnetic materials and is convenient in computations. In this paper, this same approximation has been adopted for the analysis of the steady-state processes in magnetic frequency dividers. The theory of the second-subharmonic parametric oscillator is outlined. With the assumption of a rectangular magnetization curve, the sine-wave pump drive is considered, since this mode, though more complicated than that of the square-wave pump drive, is of great practical importance. Steady-state operation is analyzed with methods based on a piecewise linearization of the (B, H) relationship of the magnetic cores in order to determine the waveforms, the values of the circuit parameters for which the subharmonic oscillations occur, and the efficiency of the device. The assumed idealization predicts the choice of the sequence of events in the operation of the device. The solution of the problem requires a knowledge of the times at which the device changes its zone of operation; these can be found from the transcendental equations derived. The equations in question were solved by means of the "Strela" digital computer for a wide range of dimensionless parameters. The results of this experimental research indicate that the general approach is well suited to this type of problem. Analytical predictions and experimental observations are in excellent agreement. Orig. art. has: 5 figures and 20 formulas.

Card 2/[illegible]

APPROVED FOR RELEASE: Tuesday, August 01, 2000 CIA-RDP86-00513R0013441

"APPROVED FOR RELEASE: Tuesday, August 01, 2000 CIA-RDP86-00513R001344

L 10015-63

ACCESSION NR: AP3002726 S/0120/63/000/003/0089/0092

44

AUTHOR: Verkhovtsev, V. S.; Vorobkevich, V. Yu.; Rakov, M. A.; Sinitskiy, L. A.

TITLE: D-c measuring amplifier

SOURCE: Pribory i tekhnika eksperimenta, no. 3, 1963, 89-92

TOPIC TAGS: d-c measuring amplifier, strong negative feedback, d-c to a-c conversion, magnetic modulator, frequency doubling, voltage amplification factor

ABSTRACT: The development of a d-c amplifier capable of measuring extremely small d-c signals is reported. The amplifier uses a strong negative feedback with preliminary d-c to a-c conversion. Use of a magnetic modulator with frequency doubling at the output results in very high stability of the zero level (10 sup -17 to 10 sup -19 w). The modulator gain is 50, while the zero drift does not exceed 10 sup -15 w, which corresponds to an input signal of 0.3 microvolt. The excitation frequency of the modulator is 900 cps. A signal from the modulator output is applied to a tuned amplifier and then to a phase detector.

Card 1/2

APPROVED FOR RELEASE: Tuesday, August 01, 2000 CIA-RDP86-00513R0013441

"APPROVED FOR RELEASE: Tuesday, August 01, 2000 CIA-RDP86-00513R001344

L 10015-63
ACCESSION NR: AP3002726

0

The two-stage tuned amplifier suppresses first and third harmonics by a factor of 150 and 80, respectively. The voltage amplification factor is approximately 5000. The bright-type transistors of the phase detector are controlled by a voltage of doubled frequency and are in a conducting state twice during the period of the emf excitation. As a result, the detector provides suppression of odd harmonics by a factor of 200 to 300. The d-c voltage developed at the detector output allows the use of a d-c amplifier as the last stage of the device. The device has the following characteristics: measuring range, from 0--3 mv; error, not more than 0.1%; rated output current, 10 mamp; power gain, 10 sup 12; and operating temperature range, from 0 to +60C. Orig. art. has: 3 figures.

ASSOCIATION: Institut mashinovedeniya i avtomatiki AN USSR (Institute of the Science of Machines and Automation AN USSR)

SUBMITTED: 12Jul62 DATE ACQ: 12Jul63 ENCL: 00

SUB CODE: 00 NO REF SOV: 000 OTHER: 002

Card 2/2

APPROVED FOR RELEASE: Tuesday, August 01, 2000 CIA-RDP86-00513R0013441

"APPROVED FOR RELEASE: Tuesday, August 01, 2000 CIA-RDP86-00513R001344

VERKHOVTSEV, V.S.; PETRUSHKO, I.V.; RAKOV, M.A.; SINITSKIY, L.A.; SHUMKOV, Yu.M.

Measurement converters with galvanically separated input and output. Avtom. i prib. no.4:78-81 O-D '63. (MIRA 16:12)

1. Institut mashinovedeniya i avtomatiki AN UkrSSR.

APPROVED FOR RELEASE: Tuesday, August 01, 2000 CIA-RDP86-00513R0013441

"APPROVED FOR RELEASE: Tuesday, August 01, 2000 CIA-RDP86-00513R001344

BERKMAN, R.Ya.; RAKOV, M.A.

Transformation of phase shifts during frequency conversions.
Radiotekhnika 18 no.1:78-79 Ja '63. (MIRA 16:2)
(Electric networks) (Electronics)

APPROVED FOR RELEASE: Tuesday, August 01, 2000 CIA-RDP86-00513R0013441

"APPROVED FOR RELEASE: Tuesday, August 01, 2000 CIA-RDP86-00513R001344

VOROBKEVICH, V.Yu.; NIKOLAYENKO, Yu.B.; RAKOV, M.A.; SINITSKIY, L.A.

Measurement converter with a galvanic separation of the input and output. Priborostroenie no.9:19-21 S '64. (MIRA 17:11)

APPROVED FOR RELEASE: Tuesday, August 01, 2000 CIA-RDP86-00513R0013441

"APPROVED FOR RELEASE: Tuesday, August 01, 2000 CIA-RDP86-00513R001344

ACCESSION NR: AP4015897 Z/0039/64/025/001/0021/0024

AUTHOR: Vorobkevic, V. Ju. (Vorobkevich, V. Yu.); Daniljuk (Danilyuk), I. S.; Rakov, M. A.; Sinickij (Sinitskiy), L. A.; Sumkov, Ju, M. (Shumkov, Yu. M)

TITLE: A phase demodulator of the second harmonic, with width modulation

SOURCE: Slaboproudy obzor, v. 25, no. 1, 1964, 21-24

TOPIC TAGS: phase demodulator, modulation, width modulation, second harmonic, phase detector

ABSTRACT: A new phase demodulator of the second harmonic, with width modulation, is described, and its response (transfer coefficient, zero point stability, dynamic characteristics) is analyzed theoretically and confirmed experimentally. Designed with semiconductor triodes, the phase demodulator needs only a small signal power with sufficient zero stability and yields a high power gain. It was used in a measuring amplifier for constant current of high stability, described by Blazhkevich, et al , in Trudy* konferentsii NTO Priboroprom, K 962. Orig. art. has 17 formulas and 7 figures.

ASSOCIATION: Ustav teorie stroju a automatizace Akademie ved Ukrajinske SSR, Lvov (Institute of the Theory of Machines and Automation, AN, UkrSSR)

Submitted: 23 Apr 63

Card 1/1

APPROVED FOR RELEASE: Tuesday, August 01, 2000 CIA-RDP86-00513R0013441

"APPROVED FOR RELEASE: Tuesday, August 01, 2000 CIA-RDP86-00513R001344

RAKOV, M. A. (L'vov)

"Theorie der parametrischen Schwingungen mit der Grundfrequenz."

report submitted for 3rd Conf on Nonlinear Oscillations, E. Berlin, 25-30 May 64.

APPROVED FOR RELEASE: Tuesday, August 01, 2000 CIA-RDP86-00513R0013441

"APPROVED FOR RELEASE: Tuesday, August 01, 2000 CIA-RDP86-00513R001344

RAKOV, M.A., kand. tekhn. nauk; [illegible], [illegible]

Circuit of a d.c. transformer with increased transformation accuracy. Elektrotekhnika 35 no.5:[illegible]-57 [illegible] (MIRA 17:8)

APPROVED FOR RELEASE: Tuesday, August 01, 2000 CIA-RDP86-00513R0013441

"APPROVED FOR RELEASE: Tuesday, August 01, 2000 CIA-RDP86-00513R001344

VASIL'YEV, Ye.D.; VERKHOVTSEV, V.S.; VOROBKEVICH, V.Yu., [illegible]; PETRUSHKO, I.V.; PILIPENKO, N.S.; RAKOV, M.A.; [illegible] R.V.; SINITSKIY, L.A., kand. tekhn. nauk; SHKOL'NYY, [illegible]; SHUMKOV, Yu.M.; YEVSEYENKO-MISYURENKO, I.V., red.

[Direct current measuring converters] Izmeritel'nye preobrazovateli postoiannogo toka. Kiev, Naukova dumka, 1965. 373 p. (MIRA 18:6)

1. Akademiya nauk URSR, Kiev. Fizyko-mekhanichnyi instytut.
2. Fiziko-mekhanicheskiy institut AN Ukr.SSR, g.L'vov (for all except Yevseyenko-Misyurenko).

APPROVED FOR RELEASE: Tuesday, August 01, 2000 CIA-RDP86-00513R0013441

"APPROVED FOR RELEASE: Tuesday, August 01, 2000 CIA-RDP86-00513R001344

L 55345-65 EWT(d)/EEC(k)-2/EEC(f)/EEC-4/EED-2/EWP(1) Pm-4/Pn-4/Pq-4/Pg-4/Pk-4/Pl-4 IJP(c) BB/GG/GS

ACCESSION NR: AT5014625 UR/0000/65/000/000/0070/0078
681.142.324

61
B+1

AUTHOR: Verkhovtsev, V. S.; Vorobkevich, V. Yu.; Nikolayenko, Yu. B.; Rakov, M. A.; Sinitskiy, L. A.

16

TITLE: Magneto-semiconductor data-converters with galvanic separation of the input from the output

SOURCE: Vsesoyuznoye soveshchaniye po magnitnym elementam avtomatiki i vychislitel'noy tekhniki. 9th, Yerevan, 1963. Magnitnyye analogovyye elementy (Magnetic analog elements); doklady soveshchaniya. Moscow, Izd-vo Nauka, 1965, 70-78

TOPIC TAGS: data converter, galvanic input-output separation, double signal conversion converter, electromagnetic signal converter, automatic control system

ABSTRACT: The connection between the registering devices and the computer within an industrial automatic control setup is realized through data converters consisting of systems with carrier frequency amplification looped by a strong feedback. This paper describes in detail 4 data converter circuits with galvanic separation of the input from the output. The accuracy of a data converter

Card 1/2

APPROVED FOR RELEASE: Tuesday, August 01, 2000 CIA-RDP86-00513R0013441

"APPROVED FOR RELEASE: Tuesday, August 01, 2000 CIA-RDP86-00513R001344

L 55345-65

ACCESSION NR: AT5014625

using a special output divider element by-passing the feedback is fixed by the accuracy of the divider proper and, consequently, high accuracy requirements imposed on the divider are often difficult to fulfill. One way to solve this problem is via the construction of two-block circuits with double signal conversion. Within the first block the signal from the sensor is converted into direct current. This current proceeds to one of the windings of the differential magnetic modulator of the second block. Each of the converter blocks consists of a separate self-compensation scheme looped by a respective feedback. The first block (within which the comparison between the input signal and the feedback signal is carried out electrically) allows the attainment of a high input resistance and converts the constant voltage into a constant current needed for the operation of the second block. The second block (within which the signals are compared magnetically) realizes the galvanic input-output separation. Detailed block diagrams, circuit diagrams, and operational data on all four alternative solutions are complemented by a discussion about the respective merits of the various engineering solutions. Orig. art. has: 4 formulas and 7 figures.

ASSOCIATION: None

SUBMITTED: 28Dec64 ENCL: 00 SUB CODE: DP, IE

NO REF SOV: 000 OTHER: 001

Card 2/2

APPROVED FOR RELEASE: Tuesday, August 01, 2000 CIA-RDP86-00513R0013441

"APPROVED FOR RELEASE: Tuesday, August 01, 2000 CIA-RDP86-00513R001344

L 55096-65 EWT(1)/EWA(h) Peb

ACCESSION NR: AP5014509 UR/0141/65/008/002/0372/0379

AUTHOR: Rakov, M. A.; Shumkov, Yu. M.

TITLE: Multiple modes in a frequency divider with two nonlinear elements

SOURCE: IVUZ. Radiofizika, v. 8, no. 2, 1965, 372-379

TOPIC TAGS: frequency division, magnetic frequency divider

ABSTRACT: The investigated magnetic frequency divider is shown in Fig. 1 of the Enclosure. Its operation as a frequency divider with a ratio 1:2 was described by the authors earlier (Nonlinear Vibration Problems v. 5, Warsaw, 1964). In the present article equations are derived for the variation of the induction in the core and for the instantaneous value of the voltage across the capacitance, and a system of transcendental equations is derived for the determination of the switching angles and capacitor voltages in the case of higher division ratios. The derivation is based on the assumption that the magnetic material has a rectangular magnetization curve with no hysteresis and that the rectifier has an ideal characteristic. The derivation makes use of the continuity of the variation of the induction in the coil, the periodicity of the process, and the assumption that when the rectifier is noncon-

Card 1/3

APPROVED FOR RELEASE: Tuesday, August 01, 2000 CIA-RDP86-00513R0013441

"APPROVED FOR RELEASE: Tuesday, August 01, 2000 CIA-RDP86-00513R001344

L 55096-65

ACCESSION NR: AP5014509

ducting all the voltage is across the capacitor. The analysis is carried out by making the operating conditions of the circuit elements continuous as they go through different parts of the operating cycle and using the dynamic demagnetization curve of the material. In view of the complexity of the rigorous equation, an approximate method, based on the use of the results for a 1:2 ratio, is described. Experimental results of an actual frequency divider are reported, confirming the calculations. A feature of the equipment is the relatively wide range of stable division and the ease of transition from one mode to another. [02]

Orig. art. has: 4 figures and 20 formulas.

ASSOCIATION: Fiziko-mekhanicheskiy institut AN UkrSSR (Physicomechanical Institute AN UkrSSR)

SUBMITTED: 04May64 ENCL: 01 SUB CODE: EC

NO REF SOV: 001 OTHER: 001 ATD PRESS: 4024

Card 2/3

APPROVED FOR RELEASE: Tuesday, August 01, 2000 CIA-RDP86-00513R0013441

"APPROVED FOR RELEASE: Tuesday, August 01, 2000 CIA-RDP86-00513R001344

L 55096-65

ACCESSION NR: AP5014509

ENCLOSURE: 01

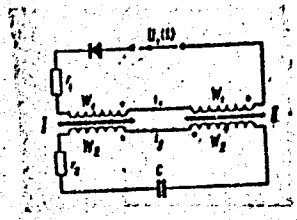

Fig. 1. Magnetic frequency divider.

Card 3/3

APPROVED FOR RELEASE: Tuesday, August 01, 2000 CIA-RDP86-00513R0013441

"APPROVED FOR RELEASE: Tuesday, August 01, 2000 CIA-RDP86-00513R001344

BAKOV, M.A., kand. tekhn. nauk (L'vov); SHUSKOV, Yu.M., kand. tekhn. nauk (L'vov)

Analysis of a magnetic frequency divider with a rectifiers in the excitation circuit. Elektrichestvo no.12:70-74 D '64. (MIRA 18:12)

APPROVED FOR RELEASE: Tuesday, August 01, 2000 CIA-RDP86-00513R0013441

"APPROVED FOR RELEASE: Tuesday, August 01, 2000 CIA-RDP86-00513R001344

L 20733-66 EWA(h)/EWT(1) GS

ACC NR: AT6008305 SOURCE CODE: UR/0000/65/000/000/0045/0050

AUTHOR: Rakov, M. A. (L'vov)

ORG: none

14

B+1

TITLE: Simplest parametric circuit as a frequency divider 25

SOURCE: AN UkrSSR. Elektricheskiye tsepi dlya preobrazovaniya izmeritel'noy informatsii (Electric circuits for converting measurement information). Kiev, Naukova dumka, 1965, 45-50

TOPIC TAGS: frequency divider, parametric circuit, magnetic frequency divider

ABSTRACT: Differential equations are set up and solved (with an approximation neglecting the secondary-circuit reaction) for a simple parametric circuit (see figure) acting as a frequency halver. The circuit comprises two magnetic cores with opposing excitation windings and a linear capacitor. Curves of currents and voltages in the

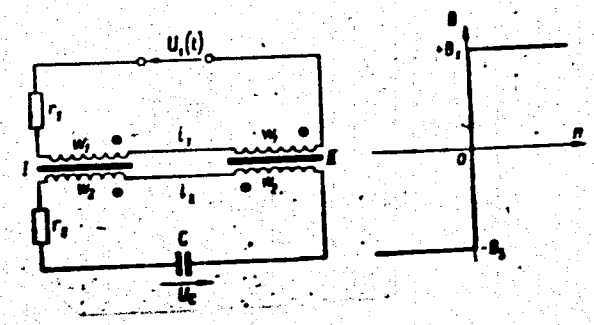

2

Card 1/2

APPROVED FOR RELEASE: Tuesday, August 01, 2000 CIA-RDP86-00513R0013441

"APPROVED FOR RELEASE: Tuesday, August 01, 2000 CIA-RDP86-00513R001344

L 20733-66

ACC NR: AT6008305

process of frequency division are shown. An experimental verification with permalloy magnets at 200--1000 cps is mentioned; stable operation was observed with a frequency variation of 1:2 and supply-voltage variation of 6 db. [03]

Orig. art. has: 3 figures and 13 formulas.

SUB CODE: 09 / SUBM DATE: 06Nov65 / ORIG REF: 002/ ATD PRESS: 4223

Card 2/2

APPROVED FOR RELEASE: Tuesday, August 01, 2000 CIA-RDP86-00513R0013441

"APPROVED FOR RELEASE: Tuesday, August 01, 2000 CIA-RDP86-00513R001344

L 27490-66 EWT(1)/EWA(h)

ACC NR: AP6015341 SOURCE CODE: UR/0119/66/000/005/0011/0012

AUTHOR: Verkhovtsev, V. S. (Engineer); Rakov, M. A. (Candidate of technical sciences)

ORG: none

21
B

TITLE: The polytron—a multistable circuit

SOURCE: Priborostroyeniye, no. 5, 1966, 11-12

TOPIC TAGS: frequency conversion, frequency converter, frequency multiplication

ABSTRACT: The principle of operation, the design, and the circuitry of a multistable polytron are described. The device is a frequency converter with a regulated conversion factor in which a transistorized keyed phase detector detects the fundamental frequency as well as the sub- and higher-harmonics. Basically, the device consists of a phase detector, a dc-amplifier and a dc to ac converter. The circuit is shown in Figure 1. A sequence of rectangular pulses (voltage V_e) with a frequency f_1 is applied to the phase detector which consists of two transistors, T_1 and T_2. The rectified output voltage, smoothed by capacitor C, is amplified by a two stage dc-amplifier (T_3, T_4). An amplification factor of about 50—70 provides the required signal level to drive the following dc to ac converter (T_5, T_6). Varying the control voltage from 1 to 5 v yields a frequency change of the converter output from 10 to 50 kc. Initially, switch K is in position 2, thus applying the dc voltage E_{start} to the input of the dc amplifier. The value of E_{start} is determined by the

Card 1/2 UDC: 621.374.4

APPROVED FOR RELEASE: Tuesday, August 01, 2000 CIA-RDP86-00513R0013441

"APPROVED FOR RELEASE: Tuesday, August 01, 2000 CIA-RDP86-00513R001344

L 27490-66

ACC NR: AP6015341

0

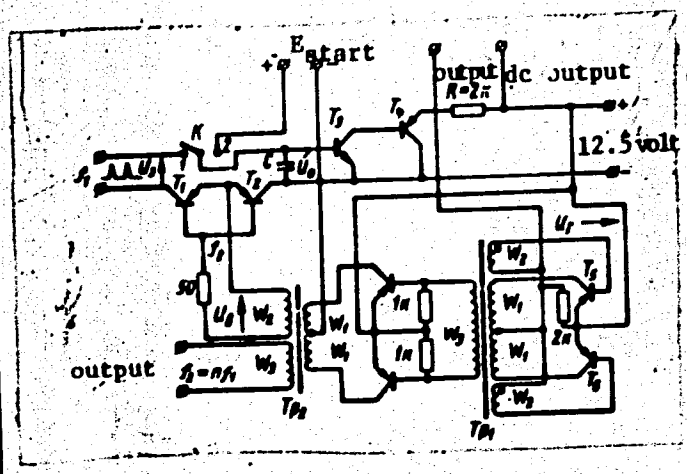

Fig. 1. Polytron circuit

number of the harmonic desired. Switching to position 1 then excites the polytron at the given harmonic, and the circuit remains in this state as long as required. The output signal is a sequence of rectangular pulses (f_2) with an amplitude of up to 5 volts. The output power is not less than 50 mw. The circuit shown has ten stable states, corrsponding to ten output frequencies between 15 kc and 42 kc, and thus can be used as a converter from dc to decimal digital code. Orig. art. has 3 figures and 1 table. [GS]

Card 2/2 BLG SUB CODE: 09/ SUBM DATE: none/ ORIG REF: 003/ ATD PRESS: 4260

APPROVED FOR RELEASE: Tuesday, August 01, 2000 CIA-RDP86-00513R0013441

"APPROVED FOR RELEASE: Tuesday, August 01, 2000 CIA-RDP86-00513R001344

L 35957-66 EWT(1) SOURCE CODE: UR/0102/66/000/002/0076/0081

ACC NR: AP6027355

AUTHOR: Rakov, M. A. (L'vov); Synyts'kyy, L. A.--Sinitskiy, L. A. (L'vov); Shumkov, Yu. M. (L'vov)

ORG: none

TITLE: Operation of a synchronous detector in multistable elements of automatic systems

SOURCE: Avtomatyka, no. 2, 1966, 76-81

TOPIC TAGS: automatic control system, detection equipment, semiconductor device, harmonic analysis

ABSTRACT: The article deals with the properties of a synchronous detector of the semiconductor triode type, which are of interest in connection with the problem of constructing automatic-system elements with many stable states. The performance of this detector in the presence of a square shaped input signal is examined for the case of higher harmonics and subharmonics and various types of generators. The degree of the suppression of undesirable harmonics, leading to the possibility of misleading operation of the element, is considered. Simple working formulas, which proved to be in satisfactory agreement with the experimental findings on the development of an element with 10 stable states, are presented. Orig. art. has: 2 figures and 12 formulas. [JPRS: 36,517]

SUB CODE: 09 / SUBM DATE: 18Mar65 / ORIG REF: 002 / OTH REF: 001

Card 1/1

APPROVED FOR RELEASE: Tuesday, August 01, 2000 CIA-RDP86-00513R0013441

"APPROVED FOR RELEASE: Tuesday, August 01, 2000 CIA-RDP86-00513R001344

L 37678-66 EWT(1) GD

ACC NR: AT6022314 SOURCE CODE: UR/0000/66/000/000/0081/0088

42

B+1

AUTHOR: Rakov, M. A.

ORG: none

TITLE: Frequency converters with controlled conversion factor

SOURCE: Vsesoyuznaya nauchnaya sessiya, posvyashchennaya Dnyu radio. 22d, 1966. Sektsiya telemekhaniki. Doklady. Moscow, 1966, 81-88

TOPIC TAGS: frequency conversion, frequency converter, phase detector

ABSTRACT: Frequency conversion circuits are described which are based on the property of a phase detector to detect not only the fundamental but also higher harmonics and subharmonics. This property permits obtaining a controlled frequency-conversion factor. Phase-detector operation with a square-shaped input pulse is theoretically examined. Two frequency-converter block diagrams (see figure) are considered. In them: 1 - phase detector and 2 - internal controlled oscillator; U is the reference exciting voltage of frequency f_1; U_0 is the

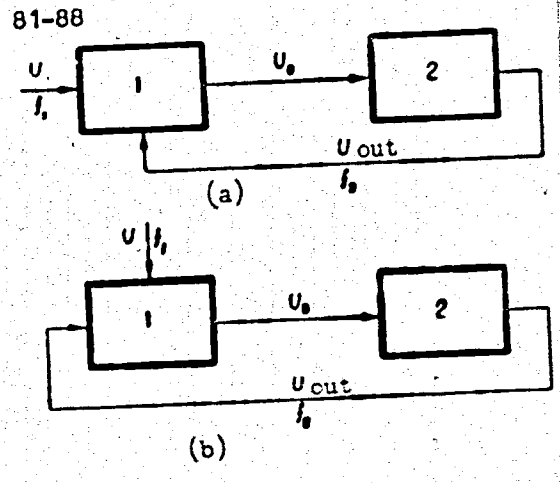

Frequency converter variants

Card 1/2

APPROVED FOR RELEASE: Tuesday, August 01, 2000 CIA-RDP86-00513R0013441

"APPROVED FOR RELEASE: Tuesday, August 01, 2000 CIA-RDP86-00513R001344

L 37678-66

ACC NR: AT6022314

direct voltage of the detector output which is applied to the controlled-oscillator input; U_{out} is the output voltage of frequency f_2. With a voltage across the smoothing capacitor of the phase detector, the oscillator generates a certain frequency. If this frequency is not a multiple of the detector-input frequency, the detector-output direct voltage is zero, the capacitor continues to discharge, and the oscillator frequency continues to slide. When one of the frequency becomes a multiple of the other, the detector will continuously feed the capacitor and thereby hold the oscillator at a definite subharmonic. A specific transistorized circuit is shown; the circuit was tested as a frequency multiplier (from 3 kc to 5--50 kc) and as a frequency divider (from 4.5 to 200 cps--2 kc). Any harmonic between the 5th and the 15th could be used. Orig. art. has: 4 figures and 6 formulas.

[03]

SUB CODE: 09 / SUBM DATE: 24Mar66 / ORIG REF: 003

Card 2/2

APPROVED FOR RELEASE: Tuesday, August 01, 2000 CIA-RDP86-00513R0013441

"APPROVED FOR RELEASE: Tuesday, August 01, 2000 CIA-RDP86-00513R001344

L 02414-67

ACC NR: AP6018022 SOURCE CODE: UR/0102/66/000/003/0072/0077

AUTHOR: Vorobkevych, V. Yu. -- Vorobkevich, V. Yu. (L'vov); Rakov, M. A. (L'vov)

ORG: None

TITLE: A measuring transducer with input-output isolation

44B

SOURCE: Avtomatyka, no. 3, 1966, 72-77

TOPIC TAGS: negative feedback, automatic control theory, semiconductor rectifier, switching circuit, magnetic modulation

ABSTRACT: The authors describe the working principle of a device for isolating the input terminals of a measuring transducer from its output terminals. Since the operating element is not involved in negative feedback, it ensures high precision of conversion. A d-c transformer of this type can be made by converting the output voltage of a measuring transducer into a-c voltage with subsequent transformation and rectification using transistors in a switching circuit. The transistors at the input are controlled by an external source and act as a modulator which changes d-c voltage into square-wave a-c. This alternating current is rectified by transistors which open the demodulator circuit and are controlled by the same voltage source. The possible sources of error are analyzed and the conclusion is drawn that the isolation device can achieve conversion linearity of at least 0.1% at 20°C where additional error is

Card 1/2

APPROVED FOR RELEASE: Tuesday, August 01, 2000 CIA-RDP86-00513R0013441

"APPROVED FOR RELEASE: Tuesday, August 01, 2000 CIA-RDP86-00513R001344

L 02414-67

ACC NR: AP6018022

not more than 0.1% at 20-70°C. Experimental data are given for operation of the measuring transducer with isolation. This transducer has a magnetic modulator with double-frequency input, converting a d-c input signal into a-c voltage. This type of modulator maintains high stability at the zero level which makes it possible to develop a measuring transducer with an error of less than 0.3%, using the isolating device at 20-60°C. The device may be used in switching from a circuit without isolation to one with isolation without difficult adjustment. Orig. art. has: 2 figures.

SUB CODE: 09/ SUBM DATE: 30Jul64/ ORIG REF: 001

hs

Card 2/2

APPROVED FOR RELEASE: Tuesday, August 01, 2000 CIA-RDP86-00513R0013441

"APPROVED FOR RELEASE: Tuesday, August 01, 2000 CIA-RDP86-00513R001344

ACC NR: AT7004330 SOURCE CODE: UR/0000/66/000/000/0127/0131

AUTHOR: Pavlyuk, E. I. (L'vov); Rakov, M. A. (L'vov); Shumkov, Yu. M. (L'vov)

ORG: none

TITLE: One physical interpretation of the Riemann function

SOURCE: AN UkrSSR. Metody i sredstva preobrazovaniya informatsii (Methods and means of information conversion). Kiev, Naukova dumka, 1966, 127-131

TOPIC TAGS: Riemann function, mathematical physics, riemann space, riemannian geometry, function analysis

ABSTRACT: As the Riemann function is continuous at any irrational point and discontinuous at any rational point, this function has been treated as a mathematical abstraction which cannot describe real physical processes. However, at least one physical process describable by the Riemann function does exist, viz.: Analysis of an electric circuit with periodically step-changing parameters can be reduced to a diagram shown in the figure, where $U_1(t)$ - periodically changing input voltage, $K(t)$ - periodically changing transfer ratio of the quadripole, and

Card 1/2

APPROVED FOR RELEASE: Tuesday, August 01, 2000 CIA-RDP86-00513R0013441

"APPROVED FOR RELEASE: Tuesday, August 01, 2000 CIA-RDP86-00513R001344

ACC NR: AT7004330

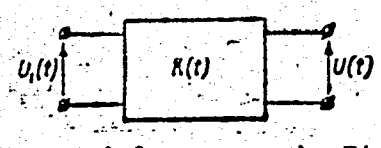

U(t) - sought-for output voltage. It is proven that the transfer ratio based on average values of the input and output voltages can be expressed in terms of the Riemann function. It is further proven that, for an interval $0 < x < \infty$, the Riemann function is periodic with a period equal to unity. This function can be physically interpreted as a closed-feedback-loop automatic control system having many stable states; it was used in developing a precision digital millivoltmeter. Orig. art. has: 3 figures and 4 formulas.

SUB CODE: 09, 12 / SUBM DATE: 14Jul66 / ORIG REF: 001

Card 2/2

APPROVED FOR RELEASE: Tuesday, August 01, 2000 CIA-RDP86-00513R0013441

"APPROVED FOR RELEASE: Tuesday, August 01, 2000 CIA-RDP86-00513R001344

[illegible]

Multiple modes in a frequency divider with two nonlinear elements. Izv. vys. ucheb. zav.; radiofiz. 8 no.2:372-379 '65. (MIRA 18:6)

1. Fiziko-mekhanicheskiy institut AN UkrSSR.

APPROVED FOR RELEASE: Tuesday, August 01, 2000 CIA-RDP86-00513R0013441

"APPROVED FOR RELEASE: Tuesday, August 01, 2000 CIA-RDP86-00513R001344

MARGOLIN, A.G., inzh.; RAKOV, M.V., inzh.; Prinimal uchastiye BRASLAVSKIY, B.A., arkhitektor; NADGORNYY, M.P., inzh., nauchn. red.; ROTENBERG, A.S., red.izd-va; PUL'KINA, Ye.A., tekhn. red.

[Large-panel exterior wall elements for industrial buildings] Krupnopanel'nye stenovye ograzhdaiushchie konstruktsii promyshlennykh zdanii. Leningrad, Gosstroiizdat, 1963. 142 p. (MIRA 17:2)

1. Lenpromstroyproyekt (for Margolin, Rakov, Braslavskiy).

APPROVED FOR RELEASE: Tuesday, August 01, 2000 CIA-RDP86-00513R0013441

"APPROVED FOR RELEASE: Tuesday, August 01, 2000 CIA-RDP86-00513R001344

SANKOVICH, N.N.; UKHANOV, A.G.; MAKSIMOV, G.A.; RAKOV, M.V.

Designing air heating systems having concentrated air output. Vod.i san.tekh. no.1:5-9 Ja '56. (MLRA 9:5)
(Hot-air heating)

APPROVED FOR RELEASE: Tuesday, August 01, 2000 CIA-RDP86-00513R0013441

"APPROVED FOR RELEASE: Tuesday, August 01, 2000 CIA-RDP86-00513R001344

RAKOV, N.A.

Determination of hydrogen chloride in chlorosilanes according to their infrared absorption spectra. Zav.lab. 29 no.4:437-438 '63. (MIRA 16:5)

(Hydrochloric acid—Absorption spectra) (Silane)

APPROVED FOR RELEASE: Tuesday, August 01, 2000 CIA-RDP86-00513R0013441

"APPROVED FOR RELEASE: Tuesday, August 01, 2000 CIA-RDP86-00513R001344

S/080/63/036/001/006/026
D226/D307

AUTHORS: Knyazev, D.A. and Rakov, N.A.

TITLE: High purification of lithium by elution chromatography

PERIODICAL: Zhurnal prikladnoy khimii, v. 36, no. 1, 1963, 63 - 66

TEXT: The present work was aimed at developing a method which would yield, in a single operation, 20-40 mg-eq. Li containing < 0.1 mol.% of alkali metals and not more than 0.01 mol % of other usual contaminants. The method chosen consisted of ion-exchange on a sulfonic acid cationite, eluting the mixture with 0.1 - 1.0 N HCl. Initial experiments showed that the industrial cationite KU-2 (KU-1) was preferable to dec (SPS). Sharp separations of Li and Na were possible on KU-2 with 1N HCl, the proportion of Na in Li and the rate of flow being relatively noncritical. Suitable column dimensions were a 3000 mm length and 20 mm dia, with resin grain-size of 0.02 - 0.5 mm. The

Card 1/2

APPROVED FOR RELEASE: Tuesday, August 01, 2000 CIA-RDP86-00513R0013441

"APPROVED FOR RELEASE: Tuesday, August 01, 2000 CIA-RDP86-00513R001344

column is regenerated by washing with an excess (3.5 l) of 1N HCl. Control experiments showed that good separations of Li and Na could be achieved in this way for 1-4 % Na in Li, and flow rates of 3-10 ml/min. Li was also successfully purified from Na, K, Ca and Fe^{3+} ions on a U-tube consisting of two 1500 mm arms connected at the bottom by a capillary. There are 2 figures and 2 tables.

ASSOCIATION: Moskovskiy khimiko-tekhnologicheskiy institut imeni D.I. Mendeleyeva (Moscow Chemical and Technological Institute imeni D.I. Mendeleyev)

SUBMITTED: July 22, 1961

APPROVED FOR RELEASE: Tuesday, August 01, 2000 CIA-RDP86-00513R0013441

"APPROVED FOR RELEASE: Tuesday, August 01, 2000 CIA-RDP86-00513R001344

GUSEV, V.P.; FOMIN, A.V.; KUNYAVSKIY, G.M.; OBICHKIN, Yu.G.; MOLOSTOV, Ye.A.; NAZAROV, A.S.; SAKHAROV, M.A.; GREBNEV, A.K.; VARLAMOV, R.G., retsenzent; DEMBITSKIY, L.N., retsenzent; RAKOV, N.A., retsenzent; LYUBIMOVA, T.M., red.; BELYAYEVA, V.V., tekhn. red.

[Calculation of electrical tolerances in radio-electronic apparatus] Raschet elektricheskikh dopuskov radioelektronnoi apparatury. [By] V.P.Gusev i dr. Moskva, "Sovetskoe radio," 1963. 366 p. (MIRA 17:1)

APPROVED FOR RELEASE: Tuesday, August 01, 2000 CIA-RDP86-00513R0013441

"APPROVED FOR RELEASE: Tuesday, August 01, 2000 CIA-RDP86-00513R001344

S/032/62/028/006/009/025
B101/B138

AUTHORS: Pchelintseva, A. F., Rakov, N. A., and Slyusareva, L. P.

TITLE: Spectrochemical determination of boron traces in highly pure silicon tetrachloride

PERIODICAL: Zavodskaya laboratoriya, v. 28, no. 6, 1962, 677 - 678

TEXT: A method is described for concentrating boron traces in highly pure $SiCl_4$, based on the formation of the nonvolatile and insoluble complex compound $(C_6H_5)_3CCl \cdot BCl$ in the presence of triphenyl chloro methane. 8 ml of the $SiCl_4$ sample with 2 mg triphenyl chloro methane, and 40 mg carbon powder which is spectrally pure with regard to boron, are mixed at dry-ice temperature for 1 hr. $SiCl_4$ is then evaporated in N_2 at 45 - 50°C and dried below 100°C (as the complex begins to decompose at 150°C). The sample is placed in the cavity of a carbon electrode which is spectrally pure with regard to boron. The recording is made with an ИСП-28 (ISP-28) spectrophotometer in a d.c. arc, the sample connected as anode being

Card 1/2

APPROVED FOR RELEASE: Tuesday, August 01, 2000 CIA-RDP86-00513R0013441

"APPROVED FOR RELEASE: Tuesday, August 01, 2000 CIA-RDP86-00513R001344

circumflowed by a weak nitrogen current, which suppresses the 2497.7 Å line of the Si-O spectrum. Electrode distance 3 mm, amperage 3 a, exposure 2.5 min for photographic plates of type III with a sensitivity of 5.5 ГОСТ (GOST) units. The boron content is determined by the absolute blackening of the 2497.7 Å boron line. The calibration curves I against log C are plotted with mixtures from carbon powder, H_3BO_3, SiO_2 and triphenyl chloro methane. The enrichment factor is calculated from $\alpha = Vd \cdot 1000/a$ (V = volume of CCl_4, ml; d = specific gravity of CCl_4, 1.485 g/cm^3; a = enriched residue, mg). The method permits the determination of $4 \cdot 10^{-7}$% B and is more accurate than in the case of boron enrichment by hydrolysis. There are 2 figures and 1 table.

APPROVED FOR RELEASE: Tuesday, August 01, 2000 CIA-RDP86-00513R0013441

"APPROVED FOR RELEASE: Tuesday, August 01, 2000 CIA-RDP86-00513R001344

RAKOV, N.V.

Possible reasons for changes in the numbers of Palaeclith saigas in the Crimea. Prirod. obst. i fauny prosh. no.1:147-151 '63. (MIRA 17:8)

APPROVED FOR RELEASE: Tuesday, August 01, 2000 CIA-RDP86-00513R0013441

"APPROVED FOR RELEASE: Tuesday, August 01, 2000 CIA-RDP86-00513R001344

RAKOV, N.V., kandidat biologicheskikh nauk.

Materials on the ecology of the subterranean vole in southeastern Kazakhstan and methods for controlling it. Trudy Resp.sta.zashch. rast.2:103-130 '55. (MLRA 10:1)
(Kazakhstan--Field mice)

APPROVED FOR RELEASE: Tuesday, August 01, 2000 CIA-RDP86-00513R0013441

"APPROVED FOR RELEASE: Tuesday, August 01, 2000 CIA-RDP86-00513R001344

GAVRIN, V.F.; RAKOV, N.V.

Materials on the study of spring migration of water birds along the upper course of the Argun' River. Migr. zhiv. no. 2:146-174 '60. (MIRA 13:12)

1. Zoologicheskiy institut AN Kazakhskoy SSR.
(Argun' Valley--Water birds) (Birds--Migration)

APPROVED FOR RELEASE: Tuesday, August 01, 2000 CIA-RDP86-00513R0013441

"APPROVED FOR RELEASE: Tuesday, August 01, 2000 CIA-RDP86-00513R001344

HAKON, N.V.

Recent distribution of ocelot in the Amur-Ussuri area. Zool. zhur. 44 no.9:1429-1432 '65. (MIRA 18:10)

1. Saranskiy pedagogicheskiy institut.

APPROVED FOR RELEASE: Tuesday, August 01, 2000 CIA-RDP86-00513R0013441

"APPROVED FOR RELEASE: Tuesday, August 01, 2000 CIA-RDP86-00513R001344

RAKOV, N.I.

Recent tiger distribution in the Amur-Ussuri region. Zool. zhur. 44 no.3:433-441 '65. (MIRA 18:8)

1. Mordovian State University, Saransk.

APPROVED FOR RELEASE: Tuesday, August 01, 2000 CIA-RDP86-00513R0013441

"APPROVED FOR RELEASE: Tuesday, August 01, 2000 CIA-RDP86-00513R001344

RAKOV, N.V.

Role of wolves and other predatory animals in controlling the number of saigas. Trudy Inst.zool.AN Kazakh.SSR 4:56-66 '55.
(Kazakhstan--Saiga) (Wolves) (MLRA 10:1)

APPROVED FOR RELEASE: Tuesday, August 01, 2000 CIA-RDP86-00513R0013441

"APPROVED FOR RELEASE: Tuesday, August 01, 2000 CIA-RDP86-00513R001344

GAVRIN, V.F., HAKOV, N.V.

Material on a study of the spring passage of water birds through the upper course of the Argun' River. Migr.zhiv. no.1:59-66 '59. (MIRA 13:6)

1. Kafedra zoologii i okhotovedeniya Urkutskogo sel'khozinstituta. (Argun' Valley--Water birds) (Birds--Migration)

APPROVED FOR RELEASE: Tuesday, August 01, 2000 CIA-RDP86-00513R0013441

"APPROVED FOR RELEASE: Tuesday, August 01, 2000 CIA-RDP86-00513R001344

RAKOV, N.V.

Counting large mammals from the aeroplane in central Kazakhstan [with summary in English]. Zoolzhur. 36 no.9:1403-1411 S '57. (MIRA 10:10)

1.Institut zoologii AN Kazakhskoy SSR.
(Kazakhstan--Mammals)
(Aeronautics in surveying)

APPROVED FOR RELEASE: Tuesday, August 01, 2000 CIA-RDP86-00513R0013441

"APPROVED FOR RELEASE: Tuesday, August 01, 2000 CIA-RDP86-00513R001344

RAKOV, N.V.

Saiga in western Kazakhstan. Trudy Inst. zool. AN Kazakh. SSR 6:28-60 '56. (MLRA 10:4)

(Kazakhstan--Saiga)

APPROVED FOR RELEASE: Tuesday, August 01, 2000 CIA-RDP86-00513R0013441

"APPROVED FOR RELEASE: Tuesday, August 01, 2000 CIA-RDP86-00513R001344

RAKOV, N.V.

Some particular features of the habitat of the wild boar in the Sikhote-Alin. Biul. MOIP. Otd. biol. 61 no.1:13-22 Ja-F '56 (MLRA 9:6)

(SIKHOTE-ALIN RANGE--WILD BOAR)

APPROVED FOR RELEASE: Tuesday, August 01, 2000 CIA-RDP86-00513R0013441

"APPROVED FOR RELEASE: Tuesday, August 01, 2000 CIA-RDP86-00513R001344

RAKOV, O.A., inzh.; LYUBANSKIY, A.P., inzh.

Continuous line for the assembly and welding of firebox shells for grain driers. Svar.proizv. no.1:19-20 Ja '63. (MIRA 16:2)

1. Odesskiy zavod "Prodmash".
(Electric welding) (Assembly line methods)

APPROVED FOR RELEASE: Tuesday, August 01, 2000 CIA-RDP86-00513R0013441

"APPROVED FOR RELEASE: Tuesday, August 01, 2000 CIA-RDP86-00513R001344

RAKOV, P.

Combined removal of water, salts, and operational admixtures from oil in situ. Neft. khoz. 39 no.7:63-65 Jl '61. (MIRA 14:6)

(Emulsions)

APPROVED FOR RELEASE: Tuesday, August 01, 2000 CIA-RDP86-00513R0013441

"APPROVED FOR RELEASE: Tuesday, August 01, 2000 CIA-RDP86-00513R001344

A

Dipole moments of esters of phosphoric, phosphorous, and phosphinic acids. A. E. Arbuzov and P. I. Rakov (Kazan State Univ.). *Izvest. Akad. Nauk S.S.S.R., Odel. Khim. Nauk* 1939, 967-48. From dielec. const. measurements in soln. in CCl_4, the following dipole moments were detd. by the formula of deVries Rolles (C.A. 35, 2785[9]): phosphites $P(OR)_3$, R = Me 1.83, Et 1.96, Pr 1.99, iso-Pr 1.98, Bu 1.92, Ph 1.59; the latter value differs very considerably from that detd. by Lewis and Smyth (C.A. 34, 4951[1]). Phosphates have considerably higher dipole moments than phosphites; the values detd. for $PO(OR)_3$, are, R = Me 3.02, Et 3.07, Pr 3.09, iso-Pr 2.85, Bu 3.05, Ph 2.89. Esters of alkylphosphinic acids have, on the whole, dipole moments by about 0.1 debye lower than the corresponding phosphates and about 1.0 higher than the corresponding phosphites; thus, for $RPO(OR)_2$, R = Me 2.88, Et 2.91, Pr 2.92, iso-Pr 2.91, Bu 2.90. Dialkyl phosphites $(RO)_2POH$, R = Me 2.94, Et 3.08, Pr 3.15, iso-Pr 3.08, Bu 3.17. The high values of the dipole moments indicate that the tautomeric equil. $OHP(OR)_2 \rightleftarrows OPH(OR)_2$, i.e. the equil. $P^{III} \rightleftarrows P^{V}$, is shifted very far to the right. This shift is, however, influenced by the nature of the solvent, hence the dipole moment varies to some extent with the solvent. Thus, for $(EtO)_2POH$, the dipole moments in CCl_4, decalin, C_6H_6, and cyclohexane, are 3.08, 3.04, 3.17, and 2.85, resp. In cyclohexane soln., the dipole moment of $(EtO)_2PO$ is found 2.84, again distinctly lower than in CCl_4, 3.07.

N. Thon

APPROVED FOR RELEASE: Tuesday, August 01, 2000 CIA-RDP86-00513R0013441

"APPROVED FOR RELEASE: Tuesday, August 01, 2000 CIA-RDP86-00513R001344

RAKOV, P.A.; NIKOLAYEV, A.V.

"Basic trends in the development and reorganization of tank farm operation"; replies to A.G.Dubiaga, S.M.Kofman, M.A.Kulisher's article published in the Neftianoe Khoziaistvo No.8, 1960.
Neft. khoz. 38 no.12:56-57 D '60. (MIRA 14:4)
(Tanks)
(Dubiaga, A.G.) (Kofman, S.M.) (Kulisher, M.A.)

APPROVED FOR RELEASE: Tuesday, August 01, 2000 CIA-RDP86-00513R0013441

"APPROVED FOR RELEASE: Tuesday, August 01, 2000 CIA-RDP86-00513R001344

SHATSOV, N.I.; RAKOV, P.P., inzh.; AVETISOV, A.A., inzh.; DANIYELYAN, A.A.; BERLIN, S.G.; GLYADKOVA, V.I., starshiy tekhnik; KARASIK, G.Ye., inzh.

Standardized oil well drilling terminology. Neft. khoz. 40 no.5:66-69 My '62. (MIRA 15:9)

1. Gosudarstvennyy komitet Soveta Ministrov RSFSR po koordinatsii nauchno-issledovatel'skikh rabot (for Rakov). 2. Vsesoyuznyy nauchno-issledovatel'skiy institut po tekhnike bezopasnosti v neftyanoy promyshlennosti (for Avetisov). 3. Azerbadydzhanskiy nauchno-issledovatel'skiy institut neftyanogo mashinostroyeniya (for Daniyelyan, Berlin). 4. Bashnefteproyekt (for Glyadkova). 5. Gosudarstvennoye ob"yedineniye Azerbaydzhanskoy neftyanoy promyshlennosti (for Karasik).
(Oil well drilling—Terminology)

APPROVED FOR RELEASE: Tuesday, August 01, 2000 CIA-RDP86-00513R0013441

"APPROVED FOR RELEASE: Tuesday, August 01, 2000 CIA-RDP86-00513R001344

KUTUKOV, A.I.; RAKOV, P.P.

Basic trends of technological development in the Petroleum industry. Bezop.truda v prom. 4 no.7: 14-16 Jl '60. (MIRA 13:8)
(Petroleum industry) (Gas, Natural)

APPROVED FOR RELEASE: Tuesday, August 01, 2000 CIA-RDP86-00513R0013441

"APPROVED FOR RELEASE: Tuesday, August 01, 2000 CIA-RDP86-00513R001344

RAKOV, P.P.

AUTHOR: Rakov, P.P. 93-57-7-21/22

TITLE: The Petroleum Industry of the Albanian People's Republic (Neftyanaya promyshlennost' Narodnoy Respubliki Albanii)

PERIODICAL: Neftyanoye khozyaystvo, 1957, Nr 7, pp 68-70 (USSR)

ABSTRACT: After World War II the Soviet Union and the other people's republics helped Albania rebuild its petroleum industry. Albania received heavy drilling rigs, mobile drilling rigs, turbodrills, pumping jacks with reducing gear, rod-type deep well pumps, dynamographs, depth manometers, and sounding devices. This equipment made it possible for Albania to increase its oil production 100 to 220 percent from 1951 to 1956. Albanian oil production in 1956 was several times higher than in prewar years. Exploratory drilling has increased since 1954 and it amounted to

Card 1/3

APPROVED FOR RELEASE: Tuesday, August 01, 2000 CIA-RDP86-00513R0013441

"APPROVED FOR RELEASE: Tuesday, August 01, 2000 CIA-RDP86-00513R001344

22,000 m. in 1956. Most of the exploratory drilling is being carried out in the Patos oilfield. During exploration of Pekisht in 1956, high-grade petroleum was found at a depth of 510 m. The proximity of this oilfield to the refinery and the high-grade petroleum in its shallow wells make it worthwhile to continue exploration of this area. A department of exploratory drilling was organized in March 1957 and it is expected that drilling the second Five Year Plan the footage of exploratory drilling will exceed nearly two times that of the first Five Year Plan. The drilling department consists of 16 drilling and 6 derrick-building crews. The formation rocks are soft and are usually drilled with RKh bits. The main oilfields are Kucove and Patos. The Driza-Patos formation in the Patos oilfield is being developed. Above this formation is the Goran formation where the oil is of an asphaltic base and of very high viscosity. The Patos oilfield produces 83 percent of the petroleum in Albania. Greater production is usually achieved by drilling new wells since application of secondary recovery methods has not been decided on. At the Kucevo oilfield many

APPROVED FOR RELEASE: Tuesday, August 01, 2000 CIA-RDP86-00513R0013441

"APPROVED FOR RELEASE: Tuesday, August 01, 2000 CIA-RDP86-00513R001344

of the low-producing wells (0.15 tons per day) are exploited with deep well pumps and some of the wells by bailing. The new refinery and the rebuilt one still process the entire Albanian petroleum production, producing asphalt, tractor kerosene, Diesel fuel, gasoline, solvent, lubricating oil, naphtha soap, and grease. The staff of petroleum engineers and technicians was trained in the Soviet Union and in other people's republics. The technicum and vocational school of the petroleum combine trains the personnel required by the Albanian petroleum industry. There is an exchange of economic, scientific, and tecnnical information on petroleum between the Soviet Union and Albania and other people's republics. There is one table.

ABAILABLE: Library of Congress

Card 3/3 1. Petroleum-Albania

APPROVED FOR RELEASE: Tuesday, August 01, 2000 CIA-RDP86-00513R0013441

"APPROVED FOR RELEASE: Tuesday, August 01, 2000 CIA-RDP86-00513R001344

RAKOV, P.P.

Results of industrial tests of new nonionic surfactants as oil emulsion breakers. Neft. khoz. 39 no.3:46-51 Mr '61. (MIRA 16:7)

(Surface-active agents) (Emulsions)

APPROVED FOR RELEASE: Tuesday, August 01, 2000 CIA-RDP86-00513R0013441

"APPROVED FOR RELEASE: Tuesday, August 01, 2000 CIA-RDP86-00513R001344

.AKOV, P.P.; SHTERENBERG, A.I.; GRAYFER, V.I., red.; LIPKOVICH, R.I., red.; ZAYNULLIN, I.Kh., tekhn. red.

[Preparation of crude for refining] Podgotovka nefti k pererabotke. Pod red. V.I.Graifera. Kazan', TSentr. biuro tekhn. informatsii, 1960. 73 p. (MIRA 15:3)
(Oil fields--Production methods) (Automatic control)

APPROVED FOR RELEASE: Tuesday, August 01, 2000 CIA-RDP86-00513R0013441

"APPROVED FOR RELEASE: Tuesday, August 01, 2000 CIA-RDP86-00513R001344

RAKOV, P.P.

Production of heavy and highly viscous oil in Albania.
Neftianik 3 no.1:30-31 Ja '58. (MIRA 11:2)
(Albania--Petroleum industry)

APPROVED FOR RELEASE: Tuesday, August 01, 2000 CIA-RDP86-00513R0013441

"APPROVED FOR RELEASE: Tuesday, August 01, 2000 CIA-RDP86-00513R001344

ZLOTNIKOV, Il'ya Matveyevich; RAKOV, Petr Petrovich; LEVINA, Ye.S., vedushchiy red.; MUKHINA, E.A., tekhn. red.

[Recovery, refining, and use of casing-head gas] Sbor, pererabotka i ispol'zovanie poputnogo neftianogo gaza. Moskva, Gos. nauchno-tekhn. izd-vo neft. i gorno-toplivnoi lit-ry, 1961. 35 p. (MIRA 14:7)
(Gas, Natural)

APPROVED FOR RELEASE: Tuesday, August 01, 2000 CIA-RDP86-00513R0013441

"APPROVED FOR RELEASE: Tuesday, August 01, 2000 CIA-RDP86-00513R001344

RAKOV, Petr Petrovich; SMIRNOV, Arseniy Sergeyevich; SHTERENBERG, Aleksandr Iosifovich; SEROVA, Ye.I., vedushchiy red.; POLOSINA, A.S., tekhn.red.

[Work organization and new techniques in petroleum production; practice of innovators] Novaia tekhnika i organizatsiia truda v dobyche nefti; opyt novatorov. Moskva, Gos.nauchno-tekhn.izd-vo neft. i gorno-toplivnoi lit-ry, 1959. 58 p. (MIRA 13:1)
(Oil fields--Production methods)

APPROVED FOR RELEASE: Tuesday, August 01, 2000 CIA-RDP86-00513R0013441

"APPROVED FOR RELEASE: Tuesday, August 01, 2000 CIA-RDP86-00513R001344

BALAMUTOV, A.D., inzh.; BAKOV, P.P., inzh.

New equipment and techniques for the petroleum industry during the seven-year plan. Bezop. truda v prom. 3 no.6:3-5 Je '59. (MIRA 12:10)

(Oil fields--Equipment and supplies)

APPROVED FOR RELEASE: Tuesday, August 01, 2000 CIA-RDP86-00513R0013441

"APPROVED FOR RELEASE: Tuesday, August 01, 2000 CIA-RDP86-00513R001344

SOV/92-58-1-19/22

AUTHOR: Rakov, P.P.

TITLE: Production of Heavy Highly-viscous Crude Oil in Albania (Dobycha tyazheloy i vysokovyazkoy nefti v Albanii)

PERIODICAL: Neftyanik, 1958, Nr 1, pp 30-31 (USSR)

ABSTRACT: Petroleum bearing formations containing heavy crude oil, the specific gravity of which is 0.986 and viscosity up to 6,000 centipoises at 30°C, are worked in the Patos petroliferous province of Albania. This crude is waxy, tarry and contains no water. Productive formations consist mostly of coarse quartz sand with permeability reaching 1,350 millidarcies. Their saturation with petroleum amounts to 82 percent. In certain places petroleum bearing formations are denuded. The depth of oil wells, in which 6" casing pipes are used, varies between 160 and 1,100 m. Petroleum deposits are opened by bullet perforation. Deposits also contain solution gas. Petroleum output of wells varies between 0.1 ton and 35 tons per day, while gas output reaches 108 cu.m. per ton of petroleum. The above petroliferous area is intensively worked and about 50 new wells are put in exploitation every day. However, a great

Card 1/2

APPROVED FOR RELEASE: Tuesday, August 01, 2000 CIA-RDP86-00513R0013441

"APPROVED FOR RELEASE: Tuesday, August 01, 2000 CIA-RDP86-00513R001344

SOV/92-58-1-19/22

Production of Heavy Highly-viscous Crude Oil in Albania

number of them soon become dry holes due to depletion of productive formations. For a number of reasons secondary recovery methods are not applied. Although Albanian oilmen are encountering considerable difficulties in working these deposits, in reconditioning oil wells, and in gathering and piping petroleum, they are gradually increasing petroleum production. The extraction of crude oil is usually started by bailing, which is carried out for 2-3 days. Then, a pumper is installed, and a deep pump is sunk into the well. Due to the high viscosity of the petroleum the instrument devised by Yakovlev for gaging the formation pressure cannot be used, and a deep manometer attached to the bailer cable is lowered into the well. For pressure maintenance solar oil or crude oil is injected in amounts varying from 1.5 cu.m. to 20 cu.m. The injection is carried out under a pressure of 20-100 atm. The output of various wells before and after the injection of the pressure maintenance fluid is shown by the author in a comparative table. Due to the high viscosity of crude produced in Albania, considerable difficulties arise in the winter in connection with piping petroleum, even though its viscosity is reduced by admixing kerosene. All aspects of the extraction of crude oil in Albania are studied by specialists. There is a photograph showing oilfields in the vicinity of the Albanian town of Berat.

Card 2/2 1. Petroleum industry--Albania 2. Petroleum--Production 3. Petroleum --Recovery 4. Petroleum--Viscosity 5. Manometers--Applications

APPROVED FOR RELEASE: Tuesday, August 01, 2000 CIA-RDP86-00513R0013441

"APPROVED FOR RELEASE: Tuesday, August 01, 2000 CIA-RDP86-00513R001344

RAKOV, P.P.

6

✓ 4460. OIL INDUSTRY OF THE PEOPLE'S REPUBLIC OF ALBANIA. Rakov, P.P. (Neft. Khoz. (Oil Ind., Moscow), July 1957, 68-70). Equipment was destroyed in the 1939-45 war, but production is now several times what it was before the war. It increased by 120% in 1951-56. There is production at Kucheva, where drilling is complete, and at Patoe, where 83% of Albanian production takes place. The Patoe crude is bituminous and very viscous (2000 to 6000 centipoises at 30°C). All the oil produced is now refined in Albania, to produce bitumen, kerosine,* diesel fuel,* gasoline,* solvent, valgoline, naphtha soap and lubricants.* Exploration* has been accelerated. (L).

JMB

OAZ

APPROVED FOR RELEASE: Tuesday, August 01, 2000 CIA-RDP86-00513R0013441

"APPROVED FOR RELEASE: Tuesday, August 01, 2000 CIA-RDP86-00513R001344

RAKOV, P.P.

Some problems in reducing production costs of petroleum. Neft. khoz. 32 no.9:6-8 S '54. (MLRA 7:9)
(Petroleum industry)

APPROVED FOR RELEASE: Tuesday, August 01, 2000 CIA-RDP86-00513R0013441

"APPROVED FOR RELEASE: Tuesday, August 01, 2000 CIA-RDP86-00513R001344

RAKOV, P.P.

AID P - 817

Subject : USSR/Mining

Card 1/1 Pub. 78 - 2/26

Author : Rakov, P. P.

Title : Some questions on lowering of the production cost of oil

Periodical : Neft. khoz., v. 32, #9, 6-8, S 1954

Abstract : General analysis of the shortcomings causing increases in the cost of oil production in various oil fields, particularly mismanagement in operation and misuse of the equipment and repair facilities.

Institution: None

Submitted : No date

APPROVED FOR RELEASE: Tuesday, August 01, 2000 CIA-RDP86-00513R0013441

"APPROVED FOR RELEASE: Tuesday, August 01, 2000 CIA-RDP86-00513R001344

NOVIKOV, M.M., inzh.; RAKOV, P.P., inzh.

Safe filling appliances for oil and oil products. Bezop. truda v prom. 5 no.8:23-24 Ag '61. (MIRA 14:8)
(Petroleum industry--Equipment and supplies)
(Petroleum industry--Safety measures)

APPROVED FOR RELEASE: Tuesday, August 01, 2000 CIA-RDP86-00513R0013441

"APPROVED FOR RELEASE: Tuesday, August 01, 2000 CIA-RDP86-00513R001344

PANKRATOVA, A.M., akademik, redaktor; GOTLOBER, D.A., redaktor; ZHELEZNOVA, L.M., redaktor; RAKOV, S.I., tekhnicheskiy redaktor.

[History of the trade-union movement in the U.S.S.R.] Istoriia profsoiuznogo dvisheniia v SSSR. Pod red. A.M.Pankratovoi. Moskva Izd-vo VTsSPS Profizdat. No.2. 1955. 447 p. (MLRA 9:5)

1.Moscow. Moskovskaya vysshaya shkola profdvisheniya.
(Trade unions--History)

APPROVED FOR RELEASE: Tuesday, August 01, 2000 CIA-RDP86-00513R0013441

"APPROVED FOR RELEASE: Tuesday, August 01, 2000 CIA-RDP86-00513R001344

MONES, I.M.; GRIGOR'YEV, Ye.A., inzhener, redaktor; KONTSEVAYA, E.M., redaktor; RA"OV, S.I., redaktor.

[Laying pipe lines without trenches and underwater] Bestransheinaia i podvodnaia prokladka truboprovodov. Moskva, Trudreservizdat, 1953. 62 p. (MLRA 7:6)

(Pipe lines)

APPROVED FOR RELEASE: Tuesday, August 01, 2000 CIA-RDP86-00513R0013441

"APPROVED FOR RELEASE: Tuesday, August 01, 2000 CIA-RDP86-00513R001344

5A

A 53
B

6491. Friction in a Vacuum. V. Rabov and R. Sokolova. *J. Techn. Phys. U.S.S.R.* 9, 9, *pp.* 708–709, 1939.—The effect on the friction between various materials of reducing the air pressure was investigated, and it was found that the coefficient of friction first fell slightly but finally, in a vacuum, increased above its original value. The effect of heating the rubbing surfaces was also examined. D. S.

ASM-SLA METALLURGICAL LITERATURE CLASSIFICATION

APPROVED FOR RELEASE: Tuesday, August 01, 2000 CIA-RDP86-00513R0013441

"APPROVED FOR RELEASE: Tuesday, August 01, 2000 CIA-RDP86-00513R001344

M

1

Friction in a Vacuum. V. Rakov and R. Sokolova (*Zhur. Tekh. Fiziki*, 1939, **9**, (9), 786–789; *Sci. Abs.*, 1939, [A], **42**, 1663). [In Russian.] The effect on the friction between various materials of reducing the air pressure was investigated, and it was found that the coeff. of friction first fell slightly, but finally, in a vacuum, increased above its original value. The effect of heating the rubbing surfaces was also examined.

ASM-SLA METALLURGICAL LITERATURE CLASSIFICATION

APPROVED FOR RELEASE: Tuesday, August 01, 2000 CIA-RDP86-00513R0013441

"APPROVED FOR RELEASE: Tuesday, August 01, 2000 CIA-RDP86-00513R001344

BOBROVNIKOV, M. (Moskva); RAKOV, V. (Murmansk); KILEYEV, A. (Astrakhan').

Closer cooperation with councils of the National Economy. Pozh. delo 4 no.2:3-5 F '58. (MIRA 11:1)

(Fire prevention)

APPROVED FOR RELEASE: Tuesday, August 01, 2000 CIA-RDP86-00513R0013441

"APPROVED FOR RELEASE: Tuesday, August 01, 2000 CIA-RDP86-00513R001344

RAKOV, V.

Ekonomika elektricheskoi tiagi i ee blizhaishie perspektivy. [The economics of the electric traction and its prospects]. (Zhel-dor. transport, 1945, no. 10-11, p. 31-38).

DLC: HE7.Z5

SO: SOVIET TRANSPORTATION AND COMMUNICATIONS, A BIBLIOGRAPHY, Library of Congress Reference Department, Washington, 1952, Unclassified.

APPROVED FOR RELEASE: Tuesday, August 01, 2000 CIA-RDP86-00513R0013441

"APPROVED FOR RELEASE: Tuesday, August 01, 2000 CIA-RDP86-00513R001344

RAKOV, V., okleveles gepeszmernok (Moszkva)

Alternating-current electric locomotives of the Soviet Railways.
Kozl tud sz 14 no.3:127-133 Mr '64.

APPROVED FOR RELEASE: Tuesday, August 01, 2000 CIA-RDP86-00513R0013441

"APPROVED FOR RELEASE: Tuesday, August 01, 2000 CIA-RDP86-00513R001344

KORNEYEV, V.; LOZE, Ya.; RAKOV, V.

A much needed book for locomotive creaws ("Basic electrical engineering for locomotive creaws." A.E. Zorokhovich, S.K. Krylov. Reviewed by V. Korneev, IA. Loze, V. Rakov,) Elek.i tepl.tiaga no.5:47-48 My '57. (MIRA 10:7)

1. Mashinist-instruktor elektrovoznogo depo Moskovka (for Korneyev).
2. Nachal'nik slushby lokomotivnogo khozyaystva Omskoy dorogi (for Loze).
3. Glavnyy tekhnicheskiy ekspert Tekhnicheskogo upravleniya Ministerstva putey soobshcheniya (for Rakov).

(Electricity) (Electric railroads)

APPROVED FOR RELEASE: Tuesday, August 01, 2000 CIA-RDP86-00513R0013441

"APPROVED FOR RELEASE: Tuesday, August 01, 2000 CIA-RDP86-00513R001344

PROCESSES AND PROPERTIES INDEX

SA

A 53
dd

6679. Secondary Emission of W, Cu and Fe at High Voltages. V. Nahov and V. Antonov. *J. Techn. Phys. U.S.S.R.* 9, 10 *pp.* 870-875, 1939. *In Russian.*—The secondary electron emission from W, Cu and Fe was studied for primary electron energies from 5 to 75 eV. The coefficients of secondary emission were found to decrease with primary electron energy over this range, becoming constant at the highest energies, and to increase with the atomic number of the metal. A detailed study was made of the distribution of velocities and directions of the secondary electrons in the case of W. [See also Abstract 1668 (1939).] D. S.

ASM-SLA METALLURGICAL LITERATURE CLASSIFICATION

APPROVED FOR RELEASE: Tuesday, August 01, 2000 CIA-RDP86-00513R0013441

"APPROVED FOR RELEASE: Tuesday, August 01, 2000 CIA-RDP86-00513R001344

KALININ, Vladimir Konstantinovich, kand. tekhn. nauk; MIKHAYLOV, Nikolay Mikhaylovich, kand. tekhn. nauk; DURANDIN, G.B., inzh., retsenzent; ROGOVA, Ye.N., inzh., retsenzent; KRASKOVSKAYA, S.N., inzh., retsenzent; DUBROVSKIY, Z.M., inzh., retsenzent; KALIKHOVICH, V.N., inzh., retsenzent; RAKOV, V.A., red.

[Rolling stock of electric railroads] Elektro-podvizhnoi sostav zheleznykh dorog. Izd.2., perer. Moskva, Transport, 1964. 498 p. (MIRA 18:1)

APPROVED FOR RELEASE: Tuesday, August 01, 2000 CIA-RDP86-00513R0013441