"APPROVED FOR RELEASE: Tuesday, August 01, 2000 CIA-RDP86-00513R001344

ACC NR: AP6034232

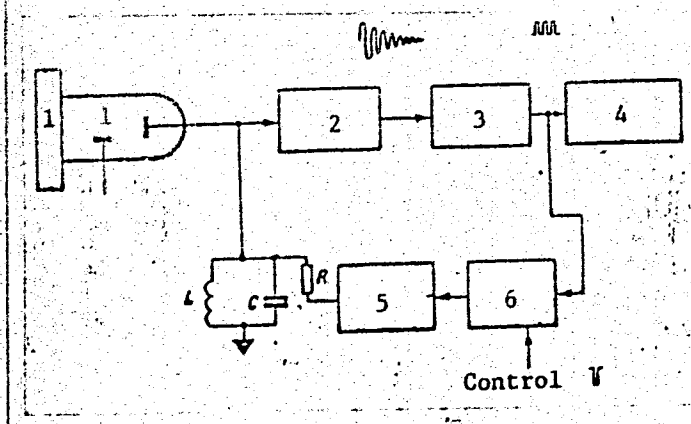

Fig. 1. Converter block diagram
1) photoelectron multiplier; 2) amplifier; 3) discriminator; 4) counter; 5) damping circuit; 6) anti-coincidence circuit

the RC circuit are supressed by the first pulse from the discriminator; this pulse is fed, through the anti-coincidence circuit to enable the damping circuit. The control pulse duration is 70 usec and the maximum converted pulse train duration is 65 usec. The converter operates with input voltages between 7 mv and 7 v and at temperatures between -10 and 45 C; its circuitry is transistorized and has a maximum power consumption of 70 mv. In conclusion, the authors express their gratitude to I. A. Savenko and N. L. Grigorov for their interest in this work. Orig. art. has: 3 figures.

SUB CODE: 09/ SUBM DATE: 10Jul65/ ORIG REF: 002

Card 2/2

APPROVED FOR RELEASE: Tuesday, August 01, 2000 CIA-RDP86-00513R0013442

"APPROVED FOR RELEASE: Tuesday, August 01, 2000 CIA-RDP86-00513R001344

ACC NR: AP7000518 SOURCE CODE: UR/0048/66/030/011/1760/1762

AUTHOR: Grigorov, N. G.; Kovrizhnykh, O. M.; Nesterov, V. Ye.; Rapoport, I. D.; Savenko, I. A.; Skuridin, G. A.; Titenkov, A. P.

ORG: none

TITLE: Measurement of the energy spectrum of primary cosmic rays with energies in the region of 10^{10}—10^{14} ev using the Proton-1 satellite [Paper presented at All-Union Conference on Physics of Cosmic Rays held in Moscow from 15 to 21 June 1965]

SOURCE: AN SSSR. Izvestiya. Seriya fizicheskaya, v. 30, no. 11, 1966, 1760-1762.

TOPIC TAGS: cosmic radiation energy, cosmic radiation, cosmic ray measurement, artificial earth satellite, primary cosmic ray, meteorologic satellite, particle spectrum

ABSTRACT: The energy spectrum of primary cosmic rays with energies between 10^{10} and 10^{14} ev was measured using equipment mounted on the Proton-1 satellite. The ionization calorimeter method of measurement was employed using SEZ-14 equipment. Spectra of protons with energies between 5×10^{9}—10^{12} ev and of all particles (protons and heavier particles) with energies between 2×10^{10}—10^{14} ev were measured, although the charge of particles with energies between $2 \cdot 10^{10}$ and 10^{14} ev was not determined. The energy spectrum (see Fig. 1) obtained from data taken during a 36-hour period for protons and a 50-hour

Card 1/2

APPROVED FOR RELEASE: Tuesday, August 01, 2000 CIA-RDP86-00513R0013442

"APPROVED FOR RELEASE: Tuesday, August 01, 2000 CIA-RDP86-00513R001344

ACC NR: AP7000518

interval for all other particles is given. It is noted that the cited results are preliminary, since they are obtained from a small part of

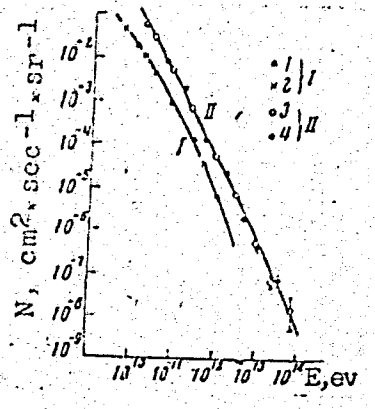

Fig. 1. Energy spectra of primary protons (I) and all other particles (II)

1, 3 - First half of the equipment; 2, 4 - second half of the equipment.

the obtained data. Orig. art. has: 2 figures.

[WA-75]
[IV]

SUB CODE: 04, 20/ SUBM DATE: none/ ORIG REF: 005/
OTH REF: 003

Card 2/2

APPROVED FOR RELEASE: Tuesday, August 01, 2000 CIA-RDP86-00513R0013442

"APPROVED FOR RELEASE: Tuesday, August 01, 2000 CIA-RDP86-00513R001344

L 40805-66 EWT(1)/EWT(1)/EWT(1)-2/...

ACC NR: AP6028357 SOURCE CODE: UR/0203/66/006/004/0762/0766

41
B

AUTHOR: Gadalov, A. N.; Rapoport, I. D.; Mineyev, Yu. V.

ORG: Moscow State University. Nuclear Physics Institute (Moskovskiy gosudarstvennyy universitet. Institut yadernoy fiziki)

TITLE: Telemetering of pulses from a scintillating cosmic ray detector over a wide dynamic range

SOURCE: Geomagnetizm i aeronomiya, v. 6, no. 4, 1966, 762-766

TOPIC TAGS: cosmic ray measurement, scintillation detector

ABSTRACT: A relatively simple system for measuring amplitude of pulses from a scintillation cosmic ray detector in the dynamic range of $\sim 2 \cdot 10^4$ is described. This range is attained by means of an analog-to-numeric conversion directly at the output of a photomultiplier. Figure 1 illustrates the basic concept of the system. An oscillatory circuit, tuned to $f \sim 1$ Mc (so that $1/f \gg \tau_\ell$ where τ_ℓ is the luminescence time), is coupled to the anode circuit of the photomultiplier which registers scintillations ($\tau_\ell \sim 10^{-9}$ sec). A photomultiplier current pulse charges the capacitor of the tank circuit and produces a packet of damped oscillations with an initial amplitude (U_0) proportional to the current pulse. The oscillations are damped and then

Card 1/3 UDC: 523.165

APPROVED FOR RELEASE: Tuesday, August 01, 2000 CIA-RDP86-00513R0013442

"APPROVED FOR RELEASE: Tuesday, August 01, 2000 CIA-RDP86-00513R001344

ACC NR: AP6000357

Photomultiplier

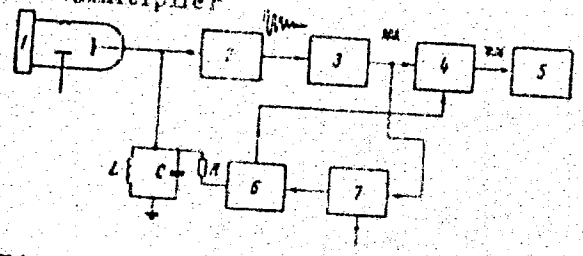

Fig. 1. Detector block diagram

1 - Scintillator; 2 - amplifier; 3 - discriminator; 4 - anticoincidence circuit (1); 5 - counter; 6 - damping circuit; 7 - anticoincidence circuit (2).

passed on to an amplitude discriminator (threshold, U_t) which forms a packet of standard pulses whose number $N = k \ln (U_0/U_t)$. In the presence of an external control signal and through an anticoincidence circuit (1), these pulses are sent to an output counter whose readings are in turn transmitted to a registration channel. In the absence of the control signal, the circuit oscillations are damped by the first pulse that arrives from the discriminator through another anticoincidence circuit (2). In this case, the packet of pulses is not damped. Thus, a selection is made of registered pulses. The minimum value of the registered scintillation pulses is determined by the input circuit noise. The circuit sensitivity (U_t), which is made to exceed several times the noise level, is ~ 300 μv. The maximum value of registered scintillation pulses of ~ 7 v is limited by the permissible

Card 2/3

APPROVED FOR RELEASE: Tuesday, August 01, 2000 CIA-RDP86-00513R0013442

"APPROVED FOR RELEASE: Tuesday, August 01, 2000 CIA-RDP86-00513R001344

ACC NR: AP6028357

amplitude at the input of the transistorized circuits. The power supply required for the entire system does not exceed 100 Mw. Orig. art. has: 3 figures. [JR]

SUB CODE: 04,18 SUBM DATE: 30Jun65/ ORIG REF: 002/ OTH REF: 001
ATD PRESS: 5059

Card 3/3 MLP

APPROVED FOR RELEASE: Tuesday, August 01, 2000 CIA-RDP86-00513R0013442

"APPROVED FOR RELEASE: Tuesday, August 01, 2000 CIA-RDP86-00513R001344

ACC NR: AP7007729

SOURCE CODE: UR/0188/67/000/001/0123/0125

AUTHOR: Mineyev, Yu. V.; Rapoport, I. D.

ORG: none

TITLE: Analog-to-digital logarithmic converter based on an oscillating circuit

SOURCE: Moscow. Universitet. Vestnik. Seriya III. Fisika, astronomiya, no. 1, 1967, 123-125

TOPIC TAGS: analog digital converter, transistorized circuit

ABSTRACT: A transistorized logarithmic analog-to-digital converter of d-c voltage into pulses is described. The input voltage (3 mv—3 v) is first converted into voltage pulses by an sampling gate circuit. These voltage pulses excite an LC circuit whose oscillations are tuned to resonate with the gate control pulses. The output of the LC circuit is amplified, limited, and fed to an amplitude discriminator, whose output is a packet of pulses. The number of pulses in the packet is proportional to the logarithm of the input d-c voltage. The converter characteristics (input amplitude vs. number of output pulses) are shown in Fig. 1 along with the

Card 1/2

UDC: 621.374.387

APPROVED FOR RELEASE: Tuesday, August 01, 2000 CIA-RDP86-00513R0013442

"APPROVED FOR RELEASE: Tuesday, August 01, 2000 CIA-RDP86-00513R001344

ACC NR: AP7007729

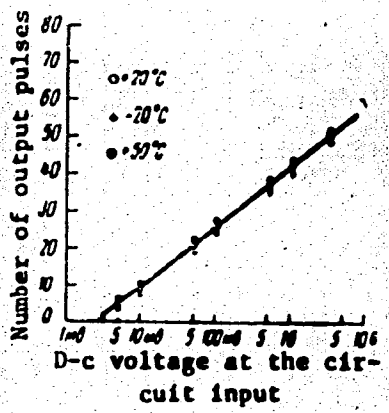

Fig. 1. Conversion and temperature stability characteristics of the converter

results showing the converter temperature stability. Power consumption of the converter is about 100 mv. Orig. art. has: 2 figures [IV]

SUB CODE: 09/ SUBM DATE: 27Jul66/ ORIG REF: 002/ SOV REF: 002/
ATD PRESS: 5117

Card 2/2

APPROVED FOR RELEASE: Tuesday, August 01, 2000 CIA-RDP86-00513R0013442

"APPROVED FOR RELEASE: Tuesday, August 01, 2000 CIA-RDP86-00513R001344

EXCERPTA MEDICA Sec 5 Vol. 10/9 Pathology Sept 57

2462. RAPOPORT I. L. and NACHIMSON L. I. *Pathological aspects of lesions of soft tissues after injections (necrotic dermo-lipo-injection granuloma)(Russian text) ARKH. PATOL. 1955, 18/7 (117-125) Illus. 8

Thirty-two biopsy specimens were examined bacteriologically and histologically after the injection of penicillin, diphtheria anatoxin and other preparations in children aged 1 to 15 yr. In 11 cases without tuberculoid structures, and in 21 with such structures a chronic inflammation was demonstrable. In only 2 cases were acid-fast rods of the BCG type found in cold abscesses. Occasionally, there were typical lipogranulomas. A uniform agent can hardly be assumed, but still, the total clinical picture is termed 'injection disease'.

Brandt - Berlin

APPROVED FOR RELEASE: Tuesday, August 01, 2000 CIA-RDP86-00513R0013442

"APPROVED FOR RELEASE: Tuesday, August 01, 2000 CIA-RDP86-00513R001344

RAPOPORT, I. M.

Obratnaya Zadacha Variatsionnogo Ischisleniya. Dan, 18 (1938), 131-136.

Obernena Zadacha Variatsiynogo Chislennya Kiev, Zh. in-ta Mathem. An USSR, 1 (1938), 81-104.

SO: Mathematics in the USSR, 1917- 1947
edited by Kurosh, A. G.,
Markushevich, A. I.,
Rashevskiy, P.K.
Moscow - Leningrad, 1948

APPROVED FOR RELEASE: Tuesday, August 01, 2000 CIA-RDP86-00513R0013442

"APPROVED FOR RELEASE: Tuesday, August 01, 2000 CIA-RDP86-00513R001344

PA 52T46

RAPOPORT, I. M.

USSR/Mathematics - Calculators
Mathematics - Equations, Differential

Nov 1947

"Differentiation in Calculating Machines," I. M. Rapoport, 22 pp

"Izv Akad Nauk SSSR, Otd Tekh Nauk" No 11

Treats the problem of the determination in calculating devices of the derivatives $\frac{dx}{dt}, \frac{d^2x}{dt^2}, \ldots \frac{d^nx}{dt^n}$ in those conditions where the differentiated function of time x(t) satisfies the given differential equation: $F\left(\frac{d^{n+1}x}{dt^{n+1}}, \frac{d^nx}{dt^n}, \ldots, \frac{dx}{dt}, x\right) = 0$. Submitted by Academician N. G. Bruyevich.

FDB 52T46

APPROVED FOR RELEASE: Tuesday, August 01, 2000 CIA-RDP86-00513R0013442

"APPROVED FOR RELEASE: Tuesday, August 01, 2000 CIA-RDP86-00513R001344

RAPOPORT, I.M.

One boundary value problem in the theory of the potential. Dop.AN URSR no.2:3-8 '48. (MLRA 9:9)

1.Predstavleno akademikom AN URSR M.O.Lavrent'yevim.
(Potential, Theory of)

APPROVED FOR RELEASE: Tuesday, August 01, 2000 CIA-RDP86-00513R0013442

"APPROVED FOR RELEASE: Tuesday, August 01, 2000 CIA-RDP86-00513R001344

RAPOPORT, I.M.

One class of infinite systems of linear algebraic equations. Dop.AN URSR no.3:6-10 '48. (MLRA 9:9)

1.Institut matematiki Akademii nauk Ukrains'koi RSR. Predstavlene akademikom M.O.Lavrent'yevim.
(Linear equations)

APPROVED FOR RELEASE: Tuesday, August 01, 2000 CIA-RDP86-00513R0013442

"APPROVED FOR RELEASE: Tuesday, August 01, 2000 CIA-RDP86-00513R001344

1. RAPOPORT, I. M.

2. USSR (600)

4. Integral Equations

7. Certain "paired" integral and integro-differential equations. Sbor.trud.Inst.mat AN USSR No. 12 1949.

9. Monthly List of Russian Accessions, Library of Congress, April 1953, Uncl.

APPROVED FOR RELEASE: Tuesday, August 01, 2000 CIA-RDP86-00513R0013442

"APPROVED FOR RELEASE: Tuesday, August 01, 2000 CIA-RDP86-00513R001344

RAPOPORT, I.M.

Plane jet flow of an ideal fluid around a solid. Ukr.mat.zhur. 2 no.1:107-117 '50. (MLRA 7:10)
(Fluid dynamics) (Jets)

APPROVED FOR RELEASE: Tuesday, August 01, 2000 CIA-RDP86-00513R0013442

"APPROVED FOR RELEASE: Tuesday, August 01, 2000 CIA-RDP86-00513R001344

RAPOPORT, I.M.

One problem in the theory of the potential. Ukr.mat.zhur. 2 no.2: 48-55 '50. (MLRA 7:10)

(Potential, Theory of)

APPROVED FOR RELEASE: Tuesday, August 01, 2000 CIA-RDP86-00513R0013442

"APPROVED FOR RELEASE: Tuesday, August 01, 2000 CIA-RDP86-00513R001344

Rapoport, I. M.

Rapoport, I. M. On the plane jet flow of an ideal fluid about a solid body. Ukrain. Mat. Žurnal 2, 107–117 (1950). (Russian)

The author considers a class of symmetric 2-dimensional free streamline flows which can be used to approximate other flows of this sort. The case of an obstruction in the form of an arc with end points as separation points and also the case of a closed curve with unknown separation points are considered. Let the z-plane (the physical plane) be mapped conformally onto the ζ-plane with a cut along the positive real axis so that the ends of the obstructing arc map onto the points $1\pm 0i$. Then $d\zeta/dz = Cv$, where $v = v_x - iv_y$ (the complex velocity) and C is a real constant. The author considers the flows obtainable from

$$v(\zeta) = \frac{v_\infty \zeta^{-1}}{(\zeta-1)^{\frac{1}{2}+i}} \exp i[\zeta^{-1}P(\zeta) - (\zeta-1)^{\frac{1}{2}}Q(\zeta)],$$

where $P(\zeta)$ and $Q(\zeta)$ are polynomials with real coefficients and related by $Q(\zeta) - (1-\zeta)^{\frac{1}{2}}P(\zeta) = O(\zeta^{-1})$ as $\zeta \to \infty$. With such a choice of v it is possible to satisfy the boundary conditions of the hydrodynamic problem, although the problem of the closed curve is somewhat more elaborate than the arc with end points. Approximations are carried out in the Z-plane, where $Z = Ke^{i\varphi}$, K the curvature and φ the angle between the tangent to the arc and the imaginary axis.

J. V. Wekauen (Providence, R. I.).

Source: Mathematical Reviews, Vol 12 No. 10

APPROVED FOR RELEASE: Tuesday, August 01, 2000 CIA-RDP86-00513R0013442

"APPROVED FOR RELEASE: Tuesday, August 01, 2000 CIA-RDP86-00513R001344

RAPOPORT, I.M.

Rapoport, I. M. On a variational problem in the theory of ordinary differential equations with boundary conditions. Doklady Akad. Nauk SSSR (N.S.) 73, 889-890 (1950). (Russian)

The author considers the equation $x''(t)+\lambda p(t)x(t)=0$, $0\leq t\leq T$, with boundary conditions $x(0)=x(T)=0$, where $p(t)$ is nonnegative in the interval $(0, T)$ and satisfies the normality condition $T^{-1}\int_0^T p(t)dt=1$. It is shown that for each n, $\lambda_n>4n^2/T^2$ and that this inequality cannot be improved. Further, for each n, the eigenvalues λ_n can take any value greater than $4n^2/T^2$. *C. G. Maple.*

Source: Mathematical Reviews, Vol 12, No. 3

APPROVED FOR RELEASE: Tuesday, August 01, 2000 CIA-RDP86-00513R0013442

"APPROVED FOR RELEASE: Tuesday, August 01, 2000 CIA-RDP86-00513R001344

RAPOPORT, I. M.

Rapoport, I. M. On the boundary problem for a system of linear differential equations with variable coefficients. Doklady Akad. Nauk SSSR (N.S.) 73, 1133–1135 (1950). (Russian)

The author investigates the problem of determining the characteristic values associated with the two-point boundary problem: $dx/dt=\lambda A(t)x$, $0\leq t\leq T$, $Px(0)+Qx(T)=0$, where x is an n-dimensional column vector and $A(t)$, P, and Q are $n\times n$ matrices. The method of expanding the solution as a power series in λ is applied. No mention is made of the results of G. D. Birkhoff and Langer [Proc. Amer. Acad. Arts Sci. 58, 51–128 (1923)] obtained in connection with the above equation. *R. Bellman.*

Source: Mathematical Reviews, Vol 12 No. 4 1

APPROVED FOR RELEASE: Tuesday, August 01, 2000 CIA-RDP86-00513R0013442

"APPROVED FOR RELEASE: Tuesday, August 01, 2000 CIA-RDP86-00513R001344

Rapoport, I. M.

Rapoport, I. M. On linear differential equations with periodic coefficients. Doklady Akad. Nauk SSSR (N.S.) 76, 793–795 (1951). (Russian)

The author considers the question of stability of oscillations determined by the equations: (1) $dx_1/dt = \lambda x_2$, $dx_2/dt = -\lambda p(t)x_1$, $p(t+T) = p(t)$, $p(t) > 0$, where $p(t)$ has a summable derivative of order $(m+1)$ in the interval $(0, T)$. Using the method of a previous paper [same Doklady N.S. 73, 889–890 (1950); these Rev. 12, 183] he constructs a solution of (1) and discusses the problem of stability, giving an asymptotic formula for the length of the zone of instability.

C. G. Maple (Washington, D. C.).

Source: Mathematical Reviews, Vol 12 No. 10

APPROVED FOR RELEASE: Tuesday, August 01, 2000 CIA-RDP86-00513R0013442

"APPROVED FOR RELEASE: Tuesday, August 01, 2000 CIA-RDP86-00513R001344

RAPOPORT, I. M.

Rapoport, I. M. On the stability of oscillations of material systems. Doklady Akad. Nauk SSSR (N.S.) 77, 25–28 (1951). (Russian)

The method given in two previous papers [same Doklady (N.S.) 73, 889–890 (1950); 76, 793–795 (1951); these Rev. 12, 183, 827] is used to discuss the question of stability of the oscillations determined by the system of equations $d^2z/dt^2+\lambda^2P(t)\cdot z=0$, $P(t+T)=P(t)$, where $P(t)$ is a periodic symmetric matrix with distinct positive values in $0\leqq t\leqq T$. With suitable conditions on the elements of $P(t)$, an asymptotic formula is given for the bounds of the region of instability of the solution of the above system.

C. G. Maple (Washington, D. C.).

Source: Mathematical Reviews, Vol 13 No.

APPROVED FOR RELEASE: Tuesday, August 01, 2000 CIA-RDP86-00513R0013442

"APPROVED FOR RELEASE: Tuesday, August 01, 2000 CIA-RDP86-00513R001344

Rapport, I. M.

Rapoport, I. M. On the asymptotic behavior of solutions of linear differential equations. Doklady Akad. Nauk SSSR (N.S.) 78, 1097–1100 (1951). (Russian)

Let $w_i(t)$, $i=1, \cdots, n$, be integrable over any finite interval (t_0, t_1) and let $\mathrm{Re}\,[w_i(t)-w_j(t)]$ be of fixed sign for large t and all $i, j, i\neq j$. Let $c_{ij}(t)$, $i, j, =1, \cdots, n$, be integrable (t_0, ∞). Then the system of differential equations

$$\frac{dy_i}{dt}=w_i(t)y_i+\sum c_{ij}y_j$$

has for each $k=1, 2, \cdots, n$ a solution

$$y_{ik}(t)=\exp\left(\int_{t_0}^{t} w_k(\tau)\eta_{ik}(\tau)d\tau\right)$$

where $\eta_{ik}(t)$ is continuous and $\eta_{ik}(\infty)=0$, $i\neq k$, $\eta_{kk}(\infty)=1$.

The vector system $dx/dt=(A_0(t)+A_1(t))x$ is considered with $A_0'(t)$ and $A_1(t)$ integrable over $(0, \infty)$. [Here apparently the author is unfamiliar with the treatment of this case by the reviewer, Duke Math. J. 15, 111–126 (1948); these Rev. 9, 509.] Other results are stated.

N. Levinson (Cambridge, Mass.).

Source: Mathematical Reviews, Vol 13 No. 5

APPROVED FOR RELEASE: Tuesday, August 01, 2000 CIA-RDP86-00513R0013442

"APPROVED FOR RELEASE: Tuesday, August 01, 2000 CIA-RDP86-00513R001344

RAPOPORT, I. M.

USSR/Mathematics - Boundary-Value Problem 1 Jul 51

"Singular Boundary-Value Problem for Ordinary Linear Differential Equations," I. M. Rapoport, Inst of Math, Acad Sci Ukrainian SSR

"Dok Ak Nauk SSSR" Vol LXXIX, No 1, pp 21-24

Considers the following self-adjoint differential eq of the 4th order: $D^2(aD^2y) + D(bDy) + cy = Ly$, where $D = d/dx$ and $y = y(x)$; also $a = a(x)$ greater than zero in the interval $(0,\infty)$. Obtains the spectrum of the self-adjoint differential operators, just as in the case with the familiar 2d-order eqs. Presented by Acad M. V. Keldysh 20 Apr 51.

210T50

APPROVED FOR RELEASE: Tuesday, August 01, 2000 CIA-RDP86-00513R0013442

"APPROVED FOR RELEASE: Tuesday, August 01, 2000 CIA-RDP86-00513R001344

RAPOPORT, I.M.

Mathematical Reviews
Vol. 15 No. 3
March 1954
Numerical and Graphical Methods

7-13-54
LL

✓ ① small 3

Rapoport, I. M. A new method of approximate integration of ordinary differential equations. Ukrain. Mat. Zurnal 4, 399–413 (1952). (Russian)

The author presents a method for the approximate integration of ordinary differential equations applicable to differential equations of arbitrary order, and not requiring any special limitations. It is shown that the accuracy of the mth approximation, obtained by this method, in the instance of a sufficiently good initial approximation, will not exceed $K\theta^{2^m}$ $(\theta<1)$ where K and θ are constants independent of m and can be calculated from the initial approximation. Part 1 treats linear differential equations, in which case a sharper error estimate is established. In part 2 an iteration process is set up for nonlinear differential equations.

W. E. Milne (Corvallis, Ore.).

APPROVED FOR RELEASE: Tuesday, August 01, 2000 CIA-RDP86-00513R0013442

"APPROVED FOR RELEASE: Tuesday, August 01, 2000 CIA-RDP86-00513R001344

USSR/Mathematics - Approximation Integration 11 Aug 52

"A New Method for Approximate Integration of Ordinary Linear Differential Equations," I. M. Rapoport, Inst of Math, Acad Sci Ukr SSR

"DAN SSSR" Vol 85, No 5, pp 9[illegible]5-998

Indicates a new procedure for constructing the successive approximations for the solns of ordinary linear differential eqs, namely, by means of an iterative process which is distinguished by its very rapid convergence. The construction of the sucessive approximations is effected

239T89

simultaneously for n linear independent partial solns of a given system of n linear differential first-order eqs. Submitted by Acad M. A. Lavrent'yev 4 Jun 52.

239T89

APPROVED FOR RELEASE: Tuesday, August 01, 2000 CIA-RDP86-00513R0013442

"APPROVED FOR RELEASE: Tuesday, August 01, 2000 CIA-RDP86-00513R001344

Rapoport, I. M.

★ Rapoport, I. M. O nekotoryh asimptoticeskih metodah v teorii differencial'nyh uravnenii. [On some asymptotic methods in the theory of differential equations.] Izdat. Akad. Nauk Ukrain. SSR, Kiev, 1954. 292 pp. 19.35 rubles.

Math.

Questions of asymptotic behavior of the solutions of systems of ordinary linear differential equations, as either the independent variable, or a parameter, increase indefinitely, have been repeatedly discussed in the literature. The present book studies such questions for a few types of systems of linear differential equations. In the chosen frame, however, the presentation is consistent and complete; it is uniform in method and exhaustive in results. Practically one method is used throughout the book. Each section emphasizes only a few final theorems where all hypotheses and most notations are explicitly summarized, so that the text is self-explanatory. All this makes the book easy to read as well as suitable for reference.

Chapter I; Asymptotic behavior of the solutions of linear differential and difference equations. In §§ 1, 2 the author lays down the main tool which he then uses throughout the book, namely the reduction of systems of first-order ordinary differential equations to L-diagonal form. Here is a typical theorem: Given the real system

(1) $$dx/dt = A(t)x, \quad t \geq 0,$$

1/6

APPROVED FOR RELEASE: Tuesday, August 01, 2000 CIA-RDP86-00513R0013442

"APPROVED FOR RELEASE: Tuesday, August 01, 2000 CIA-RDP86-00513R001344

Rapoport, I. M.

$x=(x_1, \cdots, x_n)$, $A(t)=\|a_{ij}(t)\|$ is an $n\times n$ matrix whose elements a_{ij} have first derivatives summable in $[0, \infty)$ [i.e., $a_{ij}' \in L[0, \infty)$] and the limit matrix $A(\infty)$ does not have multiple characteristic roots, then there exists a substitution $x=B(t)y$, $t\geqq\tau$, τ sufficiently large, which brings (1) into

$$dy/dt=[W(t)+C(t)]y \tag{2}$$

[L-diagonal form], where $W(t)$ is a diagonal matrix whose diagonal elements $w_i(t)$ are the characteristic roots of the matrix $A(t)$, and $C(t)=\|c_{ij}(t)\|$ with $c_{ij}(t) \in L[0, +\infty)$. This theorem and more general ones can be retraced in L. Cesari [Ann. Scuola Norm. Sup. Pisa (2) 9 (1940), 163–186; Atti Accad. Italia. Mem. Cl. Sci. Fis. Mat. Nat. 11 (1940), 633–695; MR 3, 41. 8, 208] for questions of stability. The method was successively used by N. Levinson [Duke Math. J. 15 (1948), 111–126; MR 9, 509] for questions of behavior of the solutions [cf. R. Bellman, Stability theory of differential equations, McGraw-Hill, New York, 1953, Ch. 2; MR 15, 794 (Ch. 2)]. In § 3 extensions are discussed for the case where $A(\infty)$ has multiple characteristic roots. In all cases asymptotic representations of the solutions are given and their construction in terms of L-diagonal form is simple. In § 4 the method is applied to systems containing a parameter s, namely

$$dx/dt=[sA(t)+A_0(t)+s^{-1}R(t, s)]x, \quad t\geqq 0, \tag{3}$$

2/6

APPROVED FOR RELEASE: Tuesday, August 01, 2000 CIA-RDP86-00513R0013442

"APPROVED FOR RELEASE: Tuesday, August 01, 2000 CIA-RDP86-00513R001344

Rapoport, I. M.

where $A=\|a_{ij}\|$, $A_0=\|a_{ij0}\|$, $R=\|r_{ij}\|$, and $a_{ij}'' \in L[0, +\infty)$, $a_{ij0}' \in L[0, +\infty)$, $\int_0^{+\infty} |r_{ij}|dt < M < +\infty$, $i, j=1, \cdots, n$, $s \geq s_0$. Asymptotic formulas for the solutions of system (3) are given in the form

$$x_i=[b_{ij}(t)+s^{-1}\beta_{ij}(t, s)] \exp \int_0^t w_i(t)dt$$

$(i=1, \cdots, n;\ j=1, \cdots, n)$, and the functions, b, β conveniently characterized. § 5 concerns difference systems of the form $y_{i,s+1}=w_i(s)+\sum_{j=1}^n c_{ijs}y_{js}$, where $s=s_0+n$, $n=1, 2, \cdots$.

Chapter II: Asymptotic behavior of the solutions of a self-adjoint linear differential equation. The $2n$th-order real equation

$$(4)\quad q_0(t)x-\frac{d}{dt}\left[q_1(t)\frac{dt}{dx}-\frac{d}{dt}\left[\cdots\frac{d}{dt}\left[q_n(t)\frac{d^nx}{dt^n}\right]\cdots\right]\right] =\lambda p(t)x,\ t\geq 0,$$

is studied with $q_0(t), \cdots, q_{n-1}(t) \in L[0, +\infty)$, and real unknown functions $x(t)$ are sought which are continuous with $x', \cdots, x^{(n-1)}$, $q_nx^{(n-1)}-(q_nx^{(n)})'$, etc., and the continuity of the functions $q_i(t)$ is not actually required. By reduction of (4) to a system in L-diagonal form, results are obtained concerning the behavior of the solutions of (4) as $t\to+\infty$ (§§ 1, 2). Here is a typical theorem: If (a) $q_i \in L[0, +\infty)$, $i=0, \cdots, n-1$, q_{n-1}, $b \in L(0, \tau)$, $q_n^{-2}q_n' \in L(\tau, \infty)$, $p' \in L(\tau, \infty)$;

3/6

APPROVED FOR RELEASE: Tuesday, August 01, 2000 CIA-RDP86-00513R0013442

"APPROVED FOR RELEASE: Tuesday, August 01, 2000 CIA-RDP86-00513R001344

Rapoport, I. M.

(b) $q_n^{-1}(\infty)\ p(\infty)>0$, for all τ sufficiently large, then, for $\lambda>0$, (4) has $2n$ linearly independent solutions whose behavior as $t\to+\infty$ is given by the formulas

$$x_i=e^{s\varphi(t)\cos a_i}[p(\infty)/q_n(\infty)][f_i(s)\cos(s\varphi(t))+g_i(s)\sin(s\varphi(t))],$$

where

$$s=|\lambda|^{1/2n},\ \varphi(t)=\int_{t_0}^{t}[p(t)q_n^{-1}(t)]^{1/2n}dt,$$

and the other expressions are characterized. Analogous formulas hold for the derivatives of the x_i's, and for $\lambda<0$. In § 2 the cases $q_0^{-1}(t)p(t)\to 0$, $q_0(t)p^{-1}(t)\to 0$ as $t\to+\infty$, are studied. In § 3 the behavior of the solutions of (4) as $\lambda\to\infty$ is characterized in a form similar to the one above. No question concerning turning points are considered. The discussion concerns only the real field.

Chapter III: Asymptotic properties of the eigenvalues and eigenfunctions of the regular self-adjoint boundary problem. Equation (4) is considered with self-adjoint boundary conditions of the type

$$(5_1)\qquad \sin a_K D_{K-1}x+\cos a_K D_{2n-K}\,x=0 \text{ at } t=0,$$

$$(5_2)\qquad \sin b_K D_{K-1}x+\cos b_K D_{2n-K}x=0 \text{ at } t=T,$$

$$K=1,2,\cdots,n,$$

where $D_0x=x$, $D_Kx=d^Kx/dt^K$, $K=1,2,\cdots,n-1$, $D_nx=q_n(t)d^nx/dt^n$; $D_Kx=q_{2n-K}(t)d^{2n-K}-dD_{K-1}x/dt$, $K=n+1,\cdots,2n-1$, and where $T>0$ is a given number. In §§1 and 2 general theorems are given concerning the existence and

4/6

APPROVED FOR RELEASE: Tuesday, August 01, 2000 CIA-RDP86-00513R0013442

"APPROVED FOR RELEASE: Tuesday, August 01, 2000 CIA-RDP86-00513R001344

Rapoport, I. M.

properties of solutions satisfying the n conditions (5_1). In § 3 applications are made to the behavior of the eigenvalues and eigenfunctions of (4) with conditions (5) as $T \to +\infty$. Here is a typical theorem: If (a) holds, (c) $p(t) > 0$, $q_n^{-1}(\infty) > 0$, then for $\lambda > 0$, (4) has eigenvalues $s_\nu(T)$ and normalized eigenfunctions $\zeta_\nu(t, T)$, $0 \leq t \leq T$, such that, as $T \to +\infty$, we have

$$s_{\nu+1}(T) - s_\nu(T) = [p(\infty) q_n^{-1}(\infty)]^{1/2n} [\pi + o(1)]/T$$

and

$$\zeta_\nu(t, T) = 2^{1/2} T^{-1/2} [\omega(t, \lambda_\nu) + o(1)] [p(\infty)]^{-1/2} \varrho^{-1}(s_\nu),$$

where $s = |\lambda|^{1/2n}$, and the functions ω, ϱ are characterized. The case $\lambda < 0$ is also studied. Finally, the boundary problem in $[0, \infty)$ is studied with conditions (5_1) at $t = 0$ and $x(t)$ summable in $[0, \infty)$ with weight $p(t)$ [i.e. $x \in L_p[0, \infty)$]. Asymptotic evaluations are given for the eigenvalues and normalized eigenfunctions $Z_\nu(t)$. In § 4 the cases $q_0^{-1}(t) p(t) \to 0$, and $q_0(t) p^{-1}(t) \to 0$ as $t \to \infty$, are studied.

Chapter IV: The singular self-adjoint boundary problem. The boundary problem in $[0, \infty]$ for equation (4) mentioned above is further studied. A generalized Fourier transform is given leading to a Parseval identity and expansion theorems for arbitrary functions $f(t)$, $0 \leq t < +\infty$, with $f(t) \in L_p^2(0, \infty)$ are proved.

Chapter V: Stability of solutions of linear differential 5/6

APPROVED FOR RELEASE: Tuesday, August 01, 2000 CIA-RDP86-00513R0013442

"APPROVED FOR RELEASE: Tuesday, August 01, 2000 CIA-RDP86-00513R001344

Rapoport, L. M.

equations. The stability in the sense of Lyapunov is discussed for systems reducible to L-diagonal form. In particular, systems (1) are considered with periodic coefficients, i.e., $a_{ij}(t+T)=a_{ij}(t)$. Extensions of the results are discussed for systems (1) with $a_{ij}(t+T)-a_{ij}(t) \in L[0,\infty)$. Systems of the form $d^2x/dt^2=P(t)x$, $P(t+T)=P(t)$ are considered in detail. Also difference systems are considered as in Ch. I.

A bibliography of 340 papers is added. It is regrettable that very little reference is made in the body of the book to this extensive list. A few typographic errors have been detected which, however, do not disturb the reading.

L. Cesari (Lafayette, Ind.).

6/6

APPROVED FOR RELEASE: Tuesday, August 01, 2000 CIA-RDP86-00513R0013442

"APPROVED FOR RELEASE: Tuesday, August 01, 2000 CIA-RDP86-00513R001344

RAPOPORT, I. M.

Rapoport, I. M. On an approximate method in a one-dimensional boundary problem. Ukrain. Mat. Ž. 6, 202–217 (1954). (Russian) 1-F/W

The principal feature of the method is the use of a special type of approximating polynomials to represent the solution over successive sub-intervals. Formulas are derived for the determination of these polynomials in terms of the sought-for solution and its successive derivatives. The approximate characteristic values and characteristic solutions are found from the latent roots and latent vectors respectively of a finite matrix set up with the aid of the above mentioned polynomials. *W. E. Milne* (Corvallis, Ore.).

LFH

APPROVED FOR RELEASE: Tuesday, August 01, 2000 CIA-RDP86-00513R0013442

"APPROVED FOR RELEASE: Tuesday, August 01, 2000 CIA-RDP86-00513R001344

RAPOPORT, I. M.

USSR/ Mathematics - Eigen values

Card 1/1 Pub. 22 - 6/45

Authors : Rapoport, I. M.

Title : On the evaluation of eigen values of the Hermitian operators

Periodical : Dok. AN SSSR 103/2, 199-202, Jul 11, 1955

Abstract : The evaluation of the eigen values of a Hermitian operator A in the Hilbert space H is considered. The space H is characterized by the possession of a closed, in the H, orthonormal system of eigen valued vectors e_k so that

$$\sum_k |(f,e_k)|^2 = \|f\|^2$$

for any vector f H. One USSR reference (1929).

Institution : The Acad. of Sc., Ukr. SSR, Institute of Mathematics

Presented by : Academician N. N. Bogolyubov, March 28, 1955

APPROVED FOR RELEASE: Tuesday, August 01, 2000 CIA-RDP86-00513R0013442

"APPROVED FOR RELEASE: Tuesday, August 01, 2000 CIA-RDP86-00513R001344

16(1) PHASE I BOOK EXPLOITATION SOV/2660

Vsesoyuznyy matematicheskiy s"yezd. 3rd, Moscow, 1956

Trudy. t. 4: Kratkoye soderzhaniye sektsionnykh dokladov. Doklady inostrannykh uchenykh (Transactions of the 3rd All-Union Mathematical Conference in Moscow. vol. 4: Summary of Sectional Reports. Reports of Foreign Scientists) Moscow, Izd-vo AN SSSR, 1959. 247 p. 2,200 copies printed.

Sponsoring Agency: Akademiya nauk SSSR. Matematicheskiy institut.

Tech. Ed.: G.N. Shevchenko; Editorial Board: A.A. Abramov, V.G. Boltyanskiy, A.M. Vasil'yev, B.V. Medvedev, A.D. Myshkis, S.M. Nikol'skiy (Resp. Ed.), A.G. Postnikov, Yu. V. Prokhorov, K.A. Rybnikov, P. L. Ul'yanov, V.A. Uspenskiy, N.G. Chetayev, G. Ye. Shilov, and A.I. Shirshov.

PURPOSE: This book is intended for mathematicians and physicists.

COVERAGE: The book is Volume IV of the Transactions of the Third All-Union Mathematical Conference, held in June and July 1956. The book is divided into two main parts. The first part contains summaries of the papers presented by Soviet scientists at the Conference that were not included in the first two volumes. The second part contains the text of reports submitted to the editor by non-Soviet scientists. In those cases when the non-Soviet scientist did not submit a copy of his paper to the editor, the title of the paper is cited and, if the paper was printed in a previous volume, reference is made to the appropriate volume. The papers, both Soviet and non-Soviet, cover various topics in number theory, algebra, differential and integral equations, function theory, functional analysis, probability theory, topology, mathematical problems of mechanics and physics, computational mathematics, mathematical logic and the foundations of mathematics, and the history of mathematics.

Litvinov, N.V. (Kiyev). On certain methods of solving large systems of difference equations of the theory of elasticity by means of matrix transformations 98

Minasyan, R.S. (Yerevan). On the construction of effective solutions of certain mixed boundary value problems of mathematical physics for polygonal regions 98

Podlovchenko, R.I. (Moscow). On the use of electronic computers in the calculation and interpretation of vibrational molecular spectra 99

[illegible] (Kiyev). On the evaluation of eigenvalues of linear operators in Hilbert space 99

Filin, A.P. (Leningrad). Interpolation polynomials for functions of two variables 100

APPROVED FOR RELEASE: Tuesday, August 01, 2000 CIA-RDP86-00513R0013442

"APPROVED FOR RELEASE: Tuesday, August 01, 2000 CIA-RDP86-00513R001344

RAPOPORT, I.M.

Stability of controlled processes. Dokl. AN SSSR 158 no.2:288-291 S '64. (MIRA 17:10)

1. Moskovskiy aviatsionnyy institut im. S.Ordzhonikidze. Predstavleno akademikom A.Yu.Ishlinskim.

APPROVED FOR RELEASE: Tuesday, August 01, 2000 CIA-RDP86-00513R0013442

"APPROVED FOR RELEASE: Tuesday, August 01, 2000 CIA-RDP86-00513R001344

RAPOPORT, I.M.

Fundamental equations in the theory of elastic shells.
Dokl. AN SSSR 153 no.5:1027-1029 D '63. (MIRA 17:1)

1. Predstavleno akademikom A.Yu. Ishlinskim.

APPROVED FOR RELEASE: Tuesday, August 01, 2000 CIA-RDP86-00513R0013442

"APPROVED FOR RELEASE: Tuesday, August 01, 2000 CIA-RDP86-00513R001344

RAPOPORT, I.M.

Vibration of elastic rods. Dokl. AN SSSR 153 no.4:790-793 D '63. (MIRA 17:1)

1. Predstavleno akademikom A.Yu. Ishlinskim.

APPROVED FOR RELEASE: Tuesday, August 01, 2000 CIA-RDP86-00513R0013442

"APPROVED FOR RELEASE: Tuesday, August 01, 2000 CIA-RDP86-00513R001344

RAIOFORT, I.M. (Kaliningrad)

"The general problem on the motion of an elastic body with fluid-filled cavities"

Report presented at the 2nd All-Union Congress on Theoretical and Applied Mechanics, Moscow 29 Jan - 5 Feb 64.

APPROVED FOR RELEASE: Tuesday, August 01, 2000 CIA-RDP86-00513R0013442

"APPROVED FOR RELEASE: Tuesday, August 01, 2000 CIA-RDP86-00513R001344

RAPOPORT, I.M.

Some mathematical methods in the works of O.M. Liapunov pertaining to mechanics. Ist.-mat. zbir. 1:151-156 '59. (MIRA 14:2)
(Mechanics)

APPROVED FOR RELEASE: Tuesday, August 01, 2000 CIA-RDP86-00513R0013442

"APPROVED FOR RELEASE: Tuesday, August 01, 2000 CIA-RDP86-00513R001344

RAPOPORT, I.M.

Rapoport, I. M. On a class of singular integral equations. ~~Doklady Akad.~~ Nauk SSSR (N.S.) 59, 1403–1406 (1948). (Russian)

The equation considered is (1) $f(x)+\int_0^\infty f(t)k(x-t)dt=g(x)$. The method of N. Wiener and E. Hopf [S.-B. Preuss. Akad. Wiss. Math.-Phys. Kl. 1931, 696–706] is applicable only when $k(x)=O(e^{-\lambda|x|})$, $\lambda>0$. The author solves the problem of existence and uniqueness of the solution of (1) in the class L_2, for g in L_2; also, the solution of (1) is given by quadratures when $k(x)$ is L_2 and $K(x)(2\pi)^{\frac{1}{2}}=\int_{-\infty}^{\infty}k(t)e^{ixt}dt$ satisfies: (2) $K(x)$ is Hölder α $(\alpha>0)$ for $-\infty<x<\infty$; $K(x)=O(|x|^{-\beta})$ $(\beta>0$, for $|x|\to\infty)$; $K(x)\neq-(2\pi)^{-\frac{1}{2}}(-\infty<x<\infty)$. The author's method is based on the following. In order that $\psi=\psi_1+i\psi_2$ (ψ in L_2) should represent on the axis of reals the boundary values of a function analytic in the upper (lower) half-plane and vanishing at ∞, it is necessary and sufficient that $\int_{-\infty}^{\infty}\psi(t)e^{ixt}dt$ be zero on the positive (negative) real semiaxis.

W. J. Trjitzinsky (Urbana, Ill.).

Source: Mathematical Reviews, Vol. 9 No. 8

APPROVED FOR RELEASE: Tuesday, August 01, 2000 CIA-RDP86-00513R0013442

"APPROVED FOR RELEASE: Tuesday, August 01, 2000 CIA-RDP86-00513R001344

RAPOPORT, I.M.

Remarks on the article of V.P.Basov "Study of the behavior of solutions for systems of linear differential equations in the neighborhood of a point of the irregular type." Ukr.mat.zhur.8 no.1:110-111 '56.(MLRA 9:7) (Differential equations, Linear) (Basov, V.P.)

APPROVED FOR RELEASE: Tuesday, August 01, 2000 CIA-RDP86-00513R0013442

"APPROVED FOR RELEASE: Tuesday, August 01, 2000 CIA-RDP86-00513R001344

L 16725-65 EWT(d)/EPF(n)-2/EWP(1) Po-4/Pq-4/Pg-4/Pae-2/Pu-4/Pk-4/Pl-4 IJP(c)/ ESD(dp)/SSD/ASD(a)-5/AFMDC/AFETR/AFTC(p)/RAEM(a) WW/BC

ACCESSION NR: AP4045620 S/0020/64/158/002/0288/0291

AUTHOR: Rapoport, I. M.

TITLE: On the stability of controlled processes

SOURCE: AN SSSR. Doklady*, v. 158, no. 2, 1964, 288-291

TOPIC TAGS: automatic control system, control system stability, stability criterion, Kry*lov Bogolyubov method, slow time, parameter freezing

ABSTRACT: Utilizing the concept of "slow time" introduced to mathematical physics by N. N. Bogolyuvob and N. M. Kry*lov (Introduction to nonlinear mechanics, Kiev, 1937), the author presents a method for the study of the stability of a controlled process with slowly varying parameters of the controlled member and of the control system without using the method of "freezing" the parameters of the controlled member. In place of the system of differential equations describing the control process, the following linearized system written in the vector form

$$\frac{dx}{dt} = A(\tau)x + \varepsilon a(\tau)u, \quad v = (b(\tau), x),$$

Card 1/3

APPROVED FOR RELEASE: Tuesday, August 01, 2000 CIA-RDP86-00513R0013442

"APPROVED FOR RELEASE: Tuesday, August 01, 2000 CIA-RDP86-00513R001344

L 16725-65

ACCESSION NR: AP4045620

is taken, where x(t) and a(t) are n-dimensional vectors, A is a matrix, b(t) is the n-dimensional vector determining the law for forming the input signal v(t) of the control system, $\tau = \varepsilon t$ is the "slow time," and ε is a small parameter. System (1) is analyzed simultaneously with the integral equation establishing the relation between the control function U(t) and the input signal of the control system v(t), and the stability of the controlled process is determined from the character of the solutions of the system of these equations. The solution is sought in the form

$$x(t) = y(\tau)\exp\theta(t), \quad \theta'(t) = \lambda(\tau),$$

in which $y(\tau)$ and $\lambda(t)$ are expressed in the form of series in powers of ε. The procedure for the calculation of the expansion coefficients is presented. For establishing the local stability of the process, the criterion

$$\operatorname{Re}\lambda(t) < 0.$$

is used. Assuming $\varepsilon = 1$ in the $\lambda(t)$ expansion and taking only the first two terms, the explicit form of the approximate stability criterion is obtained. By retaining the first three terms in the

Card 2/3

APPROVED FOR RELEASE: Tuesday, August 01, 2000 CIA-RDP86-00513R0013442

"APPROVED FOR RELEASE: Tuesday, August 01, 2000 CIA-RDP86-00513R001344

L 16725-65
ACCESSION NR: AP4045620

expansion of λ(t), more accurate stability criteria can be obtained which take into account not only the variation of parameters of the controlled member but also the variation of parameters of the automatic control system. The method proposed makes it possible to analyze the applicability to particular cases of the method of "freezing" parameters and, if necessary, to refine the study of stability. Orig. art. has: 27 formulas.

ASSOCIATION: Moskovskiy aviatsionny*y institut im. S. Ordzhonkidze (Moscow Aviation Institute)

SUBMITTED: 08Apr64 ENCL: 00

SUB CODE: IE NO REF SOV: 002 OTHER: 000

Card 3/3

APPROVED FOR RELEASE: Tuesday, August 01, 2000 CIA-RDP86-00513R0013442

"APPROVED FOR RELEASE: Tuesday, August 01, 2000 CIA-RDP86-00513R001344

Catalysts for hydrocarbon synthesis. B. P. Vainshtein and I. N. Rapoport. *Trudy Vsesoyus. Nauch.-Issledovatel. Inst. [redacted] Topliva i Gaza* (VNIGI) 1, 181-93 (1948).—Very active Fe-Cu catalysts were obtained by the addn. of silicates. Carriers increased catalytic activity, with kaolin being the best carrier. The catalysts are readily reproducible and give a higher proportion of olefins in the products than the Ni and Co catalysts; the octane no. of the product is close to 67, and iso compds. were found in the liquid fraction. W. M. Sternberg

APPROVED FOR RELEASE: Tuesday, August 01, 2000 CIA-RDP86-00513R0013442

"APPROVED FOR RELEASE: Tuesday, August 01, 2000 CIA-RDP86-00513R001344

RAPOPORT, I. P.

7 4

Hydrocarbons from gases containing organic sulfur compounds. I. P. Rapoport and O. A. Mutzovskaya. U.S.S.R. 106,575, Aug. 25, 1957. To make unnecessary preliminary purification of the S-contg. gases, Fe-Cu-contg. admixts. of difficultly reducible oxides, such as Al_2O_3, ZnO, or MnO_2, are used as catalysts. M. Hoseh

4E4j
4E3d

1/1

APPROVED FOR RELEASE: Tuesday, August 01, 2000 CIA-RDP86-00513R0013442

"APPROVED FOR RELEASE: Tuesday, August 01, 2000 CIA-RDP86-00513R001344

RAPOPORT, Il'ya Savel'yevna; DELAVERIDI, B.F., inzh., retsenzent; KRAPIVIN, Boris Georgiyevich, red.; SYRCHINA, M.M., red. izd-va; MAL'KOVA, N.T., tekhn. red.

[Master electrician of the metallurgical plant]Master-elektrik metallurgicheskogo zavoda. Sverdlovsk, Metallurgizdat, 1962. 220 p. (MIRA 15:9)
(Metallurgical plants—Electric equipment)

APPROVED FOR RELEASE: Tuesday, August 01, 2000 CIA-RDP86-00513R0013442

"APPROVED FOR RELEASE: Tuesday, August 01, 2000 CIA-RDP86-00513R001344

REPORT 15

PHASE I BOOK EXPLOITATION SOV/4542

Brazhnikov, Nikolay Vasil'yevich, and Il'ya Savel'yevich Rapoport

Montazh, ekspluatatsiya i remont elektricheskogo oborudovaniya metallurgicheskikh zavodov (Installation, Operation, and Maintenance of Electrical Equipment in Metallurgical Plants) Sverdlovsk, Metallurgizdat, Sverdlovskoye otd-niye, 1960. 335 p. Errata slip inserted. 7,200 copies printed.

Ed.: L. P. Rozhko; Ed. of Publishing House: M. M. Syrchina; Tech. Ed.: R. M. Matlyuk.

PURPOSE: This book is a textbook for day or evening students in industrial and metallurgical tekhnikums who are taking a course on the installation, maintenance, and operation of electrical equipment in industrial establishments and plants.

COVERAGE: The book sets forth basic information on the operation, maintenance, and installation of electrical equipment in the shops, substations, and electric networks of metallurgical plants. The authors thank Engineers O. I. Barats, G. N. Savanin, and L. P. Rozhko for their help. There are 36 references, all Soviet.

Card 1/9

APPROVED FOR RELEASE: Tuesday, August 01, 2000 CIA-RDP86-00513R0013442

"APPROVED FOR RELEASE: Tuesday, August 01, 2000 CIA-RDP86-00513R001344

BRAZHNIKOV, Nikolay Vasil'yevich; RAPOPORT, Il'ya Savel'yevich; ROZHKO, L.P., inzh., red.; SYRCHINA, M.M., red.izd-va; MATLYUK, R.M., tekhn.red.

[Assembly, operation and repair of electric equipment for metallurgical plants] Montazh, ekspluatatsiia i remont elektricheskogo oborudovaniia metallurgicheskikh zavodov. Sverdlovsk, Gos.nauchno-tekhn.izd-vo lit-ry po chernoi i tsvetnoi metallurgii. Sverdlovskoe otd-nie, 1960. 332 p. (MIRA 13:8)

(Metallurgical plants—Electric equipment)

APPROVED FOR RELEASE: Tuesday, August 01, 2000 CIA-RDP86-00513R0013442

"APPROVED FOR RELEASE: Tuesday, August 01, 2000 CIA-RDP86-00513R001344

BRAUNHIRTE, Nikolay Vasil'yevich; [illegible], [illegible] Ivan'yevna, [illegible], G.O., red.

[Assembly, operation and repair of electric equipment in metallurgical plants] Montazh, ekspluatatsiia i remont elektricheskogo oborudovaniia metallurgicheskikh zavodov. Moskva, Metallurgiia, 1965. 350 p. (MIRA 18:12)

APPROVED FOR RELEASE: Tuesday, August 01, 2000 CIA-RDP86-00513R0013442

"APPROVED FOR RELEASE: Tuesday, August 01, 2000 CIA-RDP86-00513R001344

[illegible], [illegible], inzh.

Means for increasing the reliability of the electric power supply systems of metallurgical plants. Prom. energ. 19 no.11:3[illegible]-[illegible] N '64.

(MIRA 18:1)

APPROVED FOR RELEASE: Tuesday, August 01, 2000 CIA-RDP86-00513R0013442

"APPROVED FOR RELEASE: Tuesday, August 01, 2000 CIA-RDP86-00513R001344

24(3) PHASE I BOOK EXPLOITATION SOV/2190

Vernigor, Pavel Ivanovich, and Il'ya Savel'yevich Rapoport

Mashinist elektricheskoy gazoochistki (Operator of an Electric Gas Purifier) Sverdlovsk, Metallurgizdat, 1957. 228 p. Errata slip inserted. 3,500 copies printed.

Eds.: V. A. Uspenskiy, and L. P. Rozhko; Ed. of Publishing House: V. P. Kel'nik; Tech. Ed.: Ye. M. Zef.

PURPOSE: This book is intended to help train operators handling electric gas purification equipment. It may also prove useful to foremen, crew heads, and maintenance personnel charged with the care of gas equipment in metallurgical enterprises.

COVERAGE: The book deals with the theoretical principles upon which electric filters are based, the layout of filters, and their maintenance. Considerable attention is devoted to the electrical equipment used for gas purification. Principles of physics and electrical engineering are briefly discussed. Characteristics of different types of electric filters used in ferrous

Card 1/7

APPROVED FOR RELEASE: Tuesday, August 01, 2000 CIA-RDP86-00513R0013442

"APPROVED FOR RELEASE: Tuesday, August 01, 2000 CIA-RDP86-00513R001344

metallurgy are described and instructions given on assembling, servicing, and preventing their most frequent failures. The author thanks engineers V. N. Uzhov, R. N. Voshchuk, M. S. Mironchik, V. A. Prilutskiy, and A. G. Lyakhov. There are 26 bibliographic references, all Soviet.

TABLE OF CONTENTS:

Foreword 3

Ch. 1. Basic Information on Physics and Electrical Engineering 5
Some properties of gases 5
Electric charge and field 7
Homogeneous and non-homogeneous field 9
Potential of electric field 9
Dielectrics 10
Direct current 11
Ohm's law for direct current circuit 11
Short circuit 12
Work and power of electric current 13

APPROVED FOR RELEASE: Tuesday, August 01, 2000 CIA-RDP86-00513R0013442

"APPROVED FOR RELEASE: Tuesday, August 01, 2000 CIA-RDP86-00513R001344

Operator of an Electric (Cont.) SOV/2190

Magnetic field 14
Electromagnetic induction 16
Alternating current 17
Alternating current circuit 19
Three-phase current 20

Ch. 2. Elements of Theory of Electric Gas Purification 23
Gas purification process in an electric filter 23
Gas ionization and corona formation 23
Selection of the type of current and polarization 26
Charging, shifting, and settling of dust 28

Ch. 3. Fuel Gases and Their Purification 30
Blast furnace gas and its properties 30
Properties of blast furnace dust 32
Purification of blast furnace gas 38
Rough purification of blast furnace gas 39
Mild gas purification 41
Gas purification in battery cyclones 48

Card 3/7

APPROVED FOR RELEASE: Tuesday, August 01, 2000 CIA-RDP86-00513R0013442

"APPROVED FOR RELEASE: Tuesday, August 01, 2000 CIA-RDP86-00513R001344

Operator of an Electric (Cont.) SOV/2190

Purification of gas with the aid of a checking unit 49
Gas purification with the aid of pipe dispersant 51
Intensive purification of gas 53
Water supply for gas purification 56
Water supply for continuous washing of settling electrodes 57
Recovery and properties of coke gas 63
Purification of coke gas 65
Water supply in coke gas purification 68
Recovery and properties of generator gas 69
Purification of generator gas 70
Scrubbers and water supply 72
Utilization of fuel gases in industry 73

Ch. 4. Layout and Assembling of Electric Filters 75
Principal parts of electric filters 75
Body of electric filter 77
Settling system 77
Corona system 83
Chokes 91
Disconnecting devices 94

Card 4/7

APPROVED FOR RELEASE: Tuesday, August 01, 2000 CIA-RDP86-00513R0013442

"APPROVED FOR RELEASE: Tuesday, August 01, 2000 CIA-RDP86-00513R001344

Operator of an Electric (Cont.) SOV/2190

Sectional plate disconnector 96
Thermal plate disconnector 97
Debal'tsevo plate disconnector 98
Continuous washing equipment for settling electrodes 99
Layout of intermittent washing system 101
Hydraulic shutters 102
Layout of type S electric filters 104
Type SU electric filters 106
Technical data on electric filters 108
Electric filter assembling procedure 108
Assembling the external part of an electric filter 116
Assembling communication lines and electrodes in the electric filter 117
Testing an electric filter after it has been mounted 118

Ch. 5 Electric Equipment of Electric Filters 123
General information
Designation and operational principle of amplifying-rectifying equipment
Transformers 125
Electric motors 131

Card 5/7

APPROVED FOR RELEASE: Tuesday, August 01, 2000 CIA-RDP86-00513R0013442

"APPROVED FOR RELEASE: Tuesday, August 01, 2000 CIA-RDP86-00513R001344

Operator of an Electric (Cont.) SOV/2190

Mechanical rectifier. Rectifying a current 131
Choke coils 135
Indicator of current direction 136
Automatic transformers 137
Protective resistance (rheostat) 142
Starting equipment 143
Relay of protection and control 148
Discharger 151
Dry rectifiers 151
Graphic symbols for electrical schematics 152
Schematic for the TU-200 (TU-335) equipment 154
Schematic for the AF-18 equipment 156
Schematic for the AFA-90-200 equipment 159
Amplifying-rectifying sub-station 168
Control circuit of automatic washing of fields 173

Ch. 6. Servicing Electric Filters 177
General information 177
Maintenance of operating electric filters 178
Regulating gas and electric loads 180
Control of the water run-down through gates of a water bin 181

Card 6/7

APPROVED FOR RELEASE: Tuesday, August 01, 2000 CIA-RDP86-00513R0013442

"APPROVED FOR RELEASE: Tuesday, August 01, 2000 CIA-RDP86-00513R001344

Operator of an Electric (Cont.) SOV/2190

Regulating gas temperatures 181
Cleaning and regulating continuous washing settling electrodes 182
Intermittent washing of settling fields 184
Operation of electrical equipment 185
Maintenance of gas disconnectors and their driving units 188
Maintenance of ventilating equipment 189
Stoppages of electric filters 190
Disconnecting an electric filter for overhauling 190
Cleaning settling and corona electrodes 195
Tightening and centering corona electrodes 195
Overhaul of a mechanical rectifier 196
Overhaul of chokes and their driving units 197
Testing electric filter after it has been overhauled 199
Acceptance of an overhauled electric filter 201
Preparing the electric filter for starting 201
Starting an electric filter 203
Major failures of electric filter equipment and their prevention 204
Problems of safety technique in servicing gas purification equipment 219

Bibliography 225

AVAILABLE: Library of Congress (TN718.V4) TM/mal
9-23-59

Card 7/7

APPROVED FOR RELEASE: Tuesday, August 01, 2000 CIA-RDP86-00513R0013442

"APPROVED FOR RELEASE: Tuesday, August 01, 2000 CIA-RDP86-00513R001344

FISKIND, E.Yu., inzhener; RAPOPORT, I.S., inzhener.

Reducing losses in the use of mercury rectifiers. Energetik 3 no.11:24-25 N '55. (MLRA 9:1)
(Electric current rectifiers)

APPROVED FOR RELEASE: Tuesday, August 01, 2000 CIA-RDP86-00513R0013442

"APPROVED FOR RELEASE: Tuesday, August 01, 2000 CIA-RDP86-00513R001344

AID P - 3554

Subject : USSR/Electricity

Card 1/1 Pub. 29 - 18/27

Authors : Fiskind, E. Yu. and I. S. Rapoport, Engs.

Title : Reduction of losses in operating mercury arc rectifiers

Periodical : Energetik, 11, 24-25, N 1955

Abstract : The author describes five measures applied for the reduction of losses in operating mercury arc rectifiers of the RV-20 and RMNV-500 x 6 types with a rectified voltage of 230 v and a current of 2000 to 3000 a. One drawing.

Institution : None

Submitted : No date

APPROVED FOR RELEASE: Tuesday, August 01, 2000 CIA-RDP86-00513R0013442

"APPROVED FOR RELEASE: Tuesday, August 01, 2000 CIA-RDP86-00513R001344

RAPOPORT, J.

"Au sujet de l'action desensibilisante des salicylates." Guelstein, E., Rapoport, J. et Bogdatian, M. (p. 581)

SO: Journal of General Chemistry (Zhurnal Obshchei Khimii) 1940, Volume 18, No. 1.

APPROVED FOR RELEASE: Tuesday, August 01, 2000 CIA-RDP86-00513R0013442

"APPROVED FOR RELEASE: Tuesday, August 01, 2000 CIA-RDP86-00513R001344

USSR/Human and Animal Physiology (Normal and Pathological). Climate. T-13

Abs Jour : Ref Zhur - Biol., No 16, 1958, 75301

Author : Kandror, I.S., Rapoport, K.A., Soltyskiy, Ye.I.
Inst : -
Title : Thermo-Regulatory Displacements in the Organism of Man in A Cold Climate and Morbidity Caused with a Factor of Cooling.

Orig Pub : Voyen.-med. zh., 1957, No 1, 61-67.

Abstract : Displacements are compared in the area of chemical and physical thermo-regulation in people in various periods of acclimatization in the Extreme North (basic metabolism, metabolism during standard work, vascular reaction to colling of the skin) with the level of morbidity of those nosological forms, in the etiology of which the known role belongs to the cooling factor, and correlations are established between them. Acclimatization displacements of this type

Card 1/2

APPROVED FOR RELEASE: Tuesday, August 01, 2000 CIA-RDP86-00513R0013442

"APPROVED FOR RELEASE: Tuesday, August 01, 2000 CIA-RDP86-00513R001344

USSR / Human and Animal Physiology. Thermoregulation. T

Abs Jour: Ref Zhur-Biol., No 22, 1958, 101726.

Author : Kandror, I. S.; Rapoport, K. A.
Inst : Not given.
Title : The Gaseous Interchange in Man in Muscular Work in Conditions of Extreme Cooling.

Orig Pub: Fisiol. zh. SSSR, 1957, 43, No 1, 60-64.

Abstract: In the extreme North, during the winter, gaseous interchange according to Douglas-Holden was determined in 11 test subjects during the performance of standard work with a force of 100-250 kg per min. for the duration of 3-15 min. In performance of work in the open air during strong frost (20-30°) and wind (up to 20 m in 1 sec), pulmonary ventilation increased by 30% and heat production by

Inst Gen. & Municipal Hyg., Moscow

Card 1/2

13

APPROVED FOR RELEASE: Tuesday, August 01, 2000 CIA-RDP86-00513R0013442

"APPROVED FOR RELEASE: Tuesday, August 01, 2000 CIA-RDP86-00513R001344

RAPOPORT, R. A., SKVORTSOVA, M. N., DRACHEV, S. [illegible], KONDROR, I. S., SOLTYSSKIY, YE. I., KOLTUNOVA, A. S., ITSKOVA, A. I.

"Hygienic Standardization of the Content of Mineral Salts in the Drinking Water."

report submitted at the 13th All-Union Congress of Hygienists, Epidemiologists and Infectionists, 1959.

APPROVED FOR RELEASE: Tuesday, August 01, 2000 CIA-RDP86-00513R0013442

"APPROVED FOR RELEASE: Tuesday, August 01, 2000 CIA-RDP86-00513R001344

KAPORT A A

AGGEYEV, P.K., prof.; ANDREYEVA-GALANINA, Ye.TS., prof.; BASHENIN, V.A., prof.; BENENSON, M.Ye., doktor med.nauk; VYSHEGORODTSEVA, V.D., prof.; GESSEN, A.I., dotsent; GUTKIN, A.Ya., prof.; ZHDANOV, D.A., prof., laureat Stalinskoy premii; ZNAMENSKIY, V.F., prof.; KLIONSKIY, Ye.Ye., prof.; MONASTYRSKAYA, B.I., prof.; MOSKVIN, I.A., prof.; MUCHNIK, L.S., kand.med.nauk; PETROV-MASLAKOV, M.A., prof.; RUBINOV, I.S., prof.; RYSS, S.M., prof.; SMIRNOV, A.V., prof., zasluzhennyy deyatel' nauki; TIKHOMIROV, P.Ye., prof.; TROITSKAYA, A.D., prof.; UDINTSEV, G.N., prof.; UFLYAND, Yu.M., prof.; FEDOROV, V.K., prof.; KHILOV, K.L., prof., zasluzhennyy deyatel' nauki; VADKOVSKAYA, Yu.V., prof.; MARSHAK, M.S., prof.; PETROV, M.A., kand.med.nauk; POSTNIKOVA, V.M., kand.med.nauk; RAPOPORT, K.A., kand.biolog.nauk; ROZENTUL, M.A., prof.; YANKELEVICH, Ye.I., kand.med.nauk; LYUDKOVSKAYA, N.I., tekhn.red.

[Book on health] Kniga o zdorov'e. Moskva, Gos.izd-vo med.lit-ry, Medgiz, 1959. 446 p. (MIRA 12:12)

1. Chlen-korrespondent Akademii meditsinskikh nauk SSSR (for Zhanov, Udintsev). 2. Leningradskiy sanitarno-gigiyenicheskiy meditsinskiy institut (for all, except Vadkovskaya, Marshak, Petrov, Postnikova, Rapoport, Rozentul, Yankelevich, Lyudkovskaya).
(HYGIENE)

APPROVED FOR RELEASE: Tuesday, August 01, 2000 CIA-RDP86-00513R0013442

"APPROVED FOR RELEASE: Tuesday, August 01, 2000 CIA-RDP86-00513R001344

PHASE I BOOK EXPLOITATION SOV/5789

Leningrad. Glavnaya geofizicheskaya observatoriya.

Voprosy prikladnoy klimatologii; sbornik statey (Problems in Applied Climatology; Collection of Articles) Leningrad, Gidrometeoizdat, 1959. 159 p. Errata slip inserted. 1,050 copies printed.

Sponsoring Agency: Glavnoye upravleniye gidrometeorologicheskoy sluzhby pri Sovete Ministrov SSSR. Glavnaya geofizicheskaya observatoriya im. A. I. Voyeykova.

Ed. (title page): F. F. Davitay, Doctor of Agricultural Sciences; Ed.: L. P. Khdanova; Tech. Ed.: N. V. Volkov.

PURPOSE: This publication is intended for applied climatologists and planners in climate-dependent industries.

COVERAGE: This collection of 18 articles contains reports originally presented at the Conference on Applied Climatology in Leningrad in October 1958. The purpose of the conference was to summarize the results of research done in the field of applied

Card 1/7

APPROVED FOR RELEASE: Tuesday, August 01, 2000 CIA-RDP86-00513R0013442

"APPROVED FOR RELEASE: Tuesday, August 01, 2000 CIA-RDP86-00513R001344

climatology and to point the way for further investigations. Individual articles deal with general problems in applied climatology and special problems in engineering and industrial climatology, medical and health resort climatology, climatic energy resources, and marine climatology. No personalities are mentioned. References follow individual articles.

TABLE OF CONTENTS:

Foreword

GENERAL PROBLEMS

Berlov, G. A. [Glavnaya geofizicheskaya observatoriya im. A. I. Voyeykova -- Main Geophysical Observatory imeni A. I. Voyeykov]. Spatial and Temporal Climatic Characteristics Required to Serve the Needs of the National Economy

Zapoznikova, S. A. [Nauchno-issledovatel'skiy institut aeroklimatologii -- Scientific Research Institute of Aeroclimatology] Ch

APPROVED FOR RELEASE: Tuesday, August 01, 2000 CIA-RDP86-00513R0013442

"APPROVED FOR RELEASE: Tuesday, August 01, 2000 CIA-RDP86-00513R001344

Gilevskiy, V. Yu. [Leningradskiy gidrometeorologicheskiy institut -- Leningrad Hydrometeorological Institute]. Effective Temperatures in European USSR 115

Nedkovskaya, Yu. V. and K. A. Rappoport [Institut obshchey i kommunalnoy gigieny im. Sysina AN AMN SSSR -- Institute of General and Municipal Hygiene imeni Sysin AS Academy of Medical Sciences USSR], and L. A. Chubukov, and Ya. I. Fel'dman [Institute of Geography AS USSR]. Climatic Physiological Basis for Regionalizing the USSR for Purposes of Clothing Hygiene 120

PROBLEMS OF CLIMATIC ENERGY RESOURCES

Zarimbeyskiy, B. V. [Energeticheskiy institut AN SSSR - Power Engineering Institute AS USSR]. Consideration of Some Characteristics of Radiation Climate Affecting the Operation of Solar Power Plants 138

Akimovich, N. N. [Odesskiy gidrometeorologicheskiy institut - Odessa Hydrometeorological Institute]. Wind Resources of the Part 6/7

APPROVED FOR RELEASE: Tuesday, August 01, 2000 CIA-RDP86-00513R0013442

"APPROVED FOR RELEASE: Tuesday, August 01, 2000 CIA-RDP86-00513R001344

NIRENSHTEYN, B.Z., nauchnyy sotrudnik; PREDVODITELEVA, A.D., nauchnyy sotrudnik PARSHINA, N.N., nauchnyy sotrudnik; AGAPOVA, A.D., nauchnyy sotrudnik; RAPOPORT, K.A., nauchnyy sotrudnik KOBLENTS, S.G., inzh.

Manufacture of chlorin knit underwear and its therapeutic use. Tekst.prom. 21 no.6:71-73 Je '61. (MIRA 15:2)

1. Vsesoyuznyy nauchno-issledovatel'skiy institut trikotazhnoy promyshlennosti (for Nirenshteyn, Prevoditeleva, Parshina, Agapova).
2. Institut obshchey i kommunal'noy gigiyeny (for Rapoport).
3. Trikotazhnaya fabrika "Krasnaya Zarya" (for Koblents).

(Knit goods industry)
(Underwear)

APPROVED FOR RELEASE: Tuesday, August 01, 2000 CIA-RDP86-00513R0013442

"APPROVED FOR RELEASE: Tuesday, August 01, 2000 CIA-RDP86-00513R001344

RAPOPORT, K.A., kand.biologicheskikh nauk

Hygienic evaluation and use of underwear made of chlorin (perchlorovinyl) for therapeutic purposes. Sov.med. 26 no.10:110-114 O '62. (MIRA 15:12)

1. Iz Instituta obshchey i kommunal'noy gigiyeny imeni A.N. Sysina AMN SSSR.

(UNDERWEAR) (VINYL COMPOUND POLYMERS)

APPROVED FOR RELEASE: Tuesday, August 01, 2000 CIA-RDP86-00513R0013442

"APPROVED FOR RELEASE: Tuesday, August 01, 2000 CIA-RDP86-00513R001344

VADKOVSKAYA, Yu.V., prof.; MIRONOVA, A.A., kand.med.nauk; RAPOPORT, K.A., kand.biolog.nauk

Hygienic properties of clothing made from linen fabrics. Tekst.prom. 22 no.1:24-27 Ja '62. (MIRA 15:2)

1. Institut obshchey i kommunal'noy gigiyeny imeni A.N.Sysina Akademii meditsinskikh nauk SSSR.
(CLOTHING AND DRESS) (LINEN)

APPROVED FOR RELEASE: Tuesday, August 01, 2000 CIA-RDP86-00513R0013442

"APPROVED FOR RELEASE: Tuesday, August 01, 2000 CIA-RDP86-00513R001344

L 33765-66 EWT(m)/EWP(j)/T PM

ACC NR: AP6004993 (A) SOURCE CODE: UR/0342/65/000/010/0065/0067

AUTHOR: Rapoport, K. A. (Head, Candidate of biological sciences); Grechukhina, N. A. (Senior research associate)

ORG: [Rapoport] Hygiene Laboratory for New Synthetic Materials (Laboratoriya gigeny novykh sinteticheskikh materialov); [Grechukhina] VNIITP

TITLE: Physiological-hygienic studies of clothing made from high-bulk synthetic yarn

SOURCE: Tekstil'naya promyshlennost', no. 10, 1965, 65-67

TOPIC TAGS: textile industry, textile engineering, heat insulation, CLOTHING, BODY TEMPERATURE

ABSTRACT: A specially designed bioheat meter (not described) was used to measure heat loss by convection and radiation from five subjects wearing experimental synthetic and cotton clothing and engaged in minimum muscular activity (sitting and writing). Observations were made in a building with air movement not over 0.1-0.2 m/sec. Thermal resistance of air was taken as 0.14 $m^2 \cdot hr \cdot {}^oC/kcal$. Measurements were made every 30 min. The average heat insulation of the clothing was 0.2 $m^2 \cdot hr \cdot {}^oC/kcal$, which ensured comfort of subjects during vigorous activity (at 20°C), when walking (at 10-13°C), and in winter exercises (at -8 to -12°C). Orig. art. has: 2 tables.

SUB CODE: 05/ SUBM DATE: none

UDC: 677.66.001.45

Card 1/1

APPROVED FOR RELEASE: Tuesday, August 01, 2000 CIA-RDP86-00513R0013442

"APPROVED FOR RELEASE: Tuesday, August 01, 2000 CIA-RDP86-00513R001344

RAPOPORT, R.A., kand. biol. nauk; GRECHUKHINA, N.A., starshiy nauchnyy sotrudnik

Physiological and hygienic testing of articles made from bulked synthetic fibers. Tekst. prom. 25 no.10:65-67 O '65. (MIRA 18:10)

1. Zaveduyushchiy laboratoriyey gigiyeny novykh sinteticheskikh materialov Vsesoyuznogo nauchno-issledovatel'skogo instituta trikotaznnoy promyshlennosti, Moskva (for Rapoport).
2. Vsesoyuznyy nauchno-issledovatel'skiy institut trikotazhnoy promyshlennosti, Moskva (for Grechukhina).

APPROVED FOR RELEASE: Tuesday, August 01, 2000 CIA-RDP86-00513R0013442

"APPROVED FOR RELEASE: Tuesday, August 01, 2000 CIA-RDP86-00513R001344

GRECHUKHINA, N.A., starshiy nauchnyy sotrudnik, RAPOPORT, K.A., kand. biolog. nauk

Physico-hygienic properties of goods manufactured from synthetic bulk yarn. Tekst. prom. 25 no.3:44-48 Mr '65. (MIRA 18:5)

1. Vsesoyuznyy nauchno-issledovatel'skiy institut torfyanoy promyshlennosti (for Grechukhina). 2. Zavednyushchiy laboratoriyey Instituta obshchey i kommunal'noy gigiyeny imeni A.N. Sysina AMN SSSR (for Rapoport).

APPROVED FOR RELEASE: Tuesday, August 01, 2000 CIA-RDP86-00513R0013442

"APPROVED FOR RELEASE: Tuesday, August 01, 2000 CIA-RDP86-00513R001344

L 58980-65

ACCESSION NR: AP5019024 UR/0286/65/000/012/0050/0050
615.472

12
B

AUTHOR: Raykhman, S. P.; Makarova, Ye. D.; Rapoport, K. A.

TITLE: A device for fastening a set of sensing elements to the human skin. Class 30, No. 171963

SOURCE: Byulleten' izobreteniy i tovarnykh znakov, no. 12, 1965, 50

TOPIC TAGS: physiology, physiological testing

ABSTRACT: This Author's Certificate introduces: 1. A device for fastening a set of sensing elements to the human skin. The device contains metal fastening clips and joints. The device is designed so that a person being tested can fasten the necessary number of sensing elements rapidly and tightly to given sections of his own skin during physiological studies. Provision is made also for preventing dislocation of wires or breaking them off and interrupting the electrical contact. The leads for the sensing elements are mounted in non-stretching channels formed by fabric strips sewn onto the undergarment, and the elements themselves are fastened at the ends of the channels. 2. A modification of this device in which the elastic

Card 1/3

APPROVED FOR RELEASE: Tuesday, August 01, 2000 CIA-RDP86-00513R0013442

"APPROVED FOR RELEASE: Tuesday, August 01, 2000 CIA-RDP86-00513R001344

L 58980-65

ACCESSION NR: AP5019024

cords for pressing the electrodes against the skin of the person being tested are made in the form of a tape with fasteners for regulating its length. These tapes are located in the channels for preventing dislocation of the wires.

ASSOCIATION: Vsesoyuznyy nauchno-issledovatel'skiy institut zhelezhnodorozhnogo transporta (All-Union Scientific Research Institute of Railway Transportation); Institut obshchey i kommunal'noy gigiyeny im. Sysina AMN SSSR (Institute of Social and Communal Hygiene, AMN SSSR)

SUBMITTED: 14Jan64 ENCL: 01 SUB CODE: LS

NO REF SOV: 000 OTHER: 000

Card 2/3

APPROVED FOR RELEASE: Tuesday, August 01, 2000 CIA-RDP86-00513R0013442

"APPROVED FOR RELEASE: Tuesday, August 01, 2000 CIA-RDP86-00513R001344

L 58980-65

ACCESSION NR: AP5019024

ENCLOSURE: 01

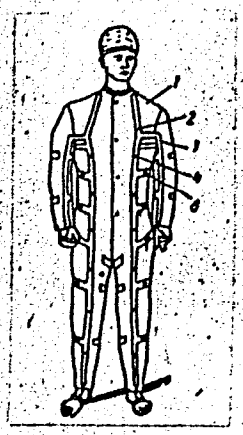

Fig. 1--undergarment; 2--longitudinal strips; 3--transverse strips; 4--button; 5--electrode; 6--lead; 7--elastic cords; 8--fasteners

Card 3/3

APPROVED FOR RELEASE: Tuesday, August 01, 2000 CIA-RDP86-00513R0013442

"APPROVED FOR RELEASE: Tuesday, August 01, 2000 CIA-RDP86-00513R001344

L 41176-65 EWG(j)/EWT(d)/EWG(r)/EWT(1)/FS(v)-3/EEC(k)-2/EWG(v)/EEC-4/
ACCESSION NR: AR4045748 S/0275/64/000/007/V004/V004 43
EWG(a)-2/EEC(c)-2/EED-2/EWG(c) Pe-5/Pq-4/Pac-4/Pae-2 B
SOURCE: Ref. zh. Elektronika i yeye primeneniye. Svodny*y tom, Abs. 7V29

AUTHOR: Gumener, P. I.; Poltorak, S. A.; Rapoport, K. A.; Raykhman, S. P.

TITLE: Methods of radiotelemetric investigations of the temperature of skin, body, and air

CITED SOURCE: Sb. Radiotelemetriya v fiziol. i med., Sverdlovsk, 1963, 101-108

TOPIC TAGS: telemetry, telemeter, physiological test

TRANSLATION: The transmitting part of a modified system intended for radiotelemetric study of the temperature of the body, skin, air under and over clothing consists of 17 semiconductor sensors, an automatic switch (time relays and a step selector), an RC electron-tube oscillator, an amplifier, and a semiconductor AM USW transmitter. Each sensor excites the RC oscillator in its own frequency band. The oscillator, the amplifier, and the supply batteries are fastened to the belt of the subject, while the transmitter is mounted as the subject's headgear. The receiving part comprises a receiver and a dekatron pulse counter. A time relay

Card 1/2

APPROVED FOR RELEASE: Tuesday, August 01, 2000 CIA-RDP86-00513R0013442

"APPROVED FOR RELEASE: Tuesday, August 01, 2000 CIA-RDP86-00513R001344

L 41176-65

ACCESSION NR: AR4045748

0

starts the counter for 10 minutes on appearance of a sensor signal. The counter is cleared by the investigator. The signal's origin can be determined either visually, or on a cathode-ray oscilloscope, or by hearing. Tests have shown that the temperature can be measured at a distance of 20 m with an error of 0.1C. Bibliography: 3 titles.

SUB CODE: EC, LS ENCL: 00

Card 2/2

APPROVED FOR RELEASE: Tuesday, August 01, 2000 CIA-RDP86-00513R0013442

"APPROVED FOR RELEASE: Tuesday, August 01, 2000 CIA-RDP86-00513R001344

RAPOPORT, K.M., mayor meditsinskoy sluzhby

Treatment of carbon monoxide poisoning with oxygen under high pressure. Voen.-med.zhur.no.8:46-49 Ag'58. (MIRA 16:7)
(CARBON MONOXIDE--PHYSIOLOGICAL EFFECT)
(OXYGEN--THERAPEUTIC USE)

APPROVED FOR RELEASE: Tuesday, August 01, 2000 CIA-RDP86-00513R0013442

"APPROVED FOR RELEASE: Tuesday, August 01, 2000 CIA-RDP86-00513R001344

RAPOPORT, K.M. (Tallinn)

Effect of increased oxygen pressure in experimental hypoxia induced by carbon monoxide poisoning. Pat. fiziol. i eksp. terap. 3 no.3:27-32 My-Je '59. (MIRA 12:7)

(CARBON MONOXIDE, poisoning,
eff. of high oxygen pressure in animals (Rus))
(OXYGEN, effects,
high pressure oxygen on exper. carbon monoxide pois. (Rus))

APPROVED FOR RELEASE: Tuesday, August 01, 2000 CIA-RDP86-00513R0013442

"APPROVED FOR RELEASE: Tuesday, August 01, 2000 CIA-RDP86-00513R001344

5(1) SOV/67-30-6-9/22

AUTHOR: Rapoport, K. M.

TITLE: Inflammation of Ebonite in Gaseous Oxygen (Vosplameneniye ebonita v gazoobraznom kislorode)

PERIODICAL: Kislorod, 1958, Nr 6, pp 31 - 32 (USSR)

ABSTRACT: A flap valve ebonite insert caught fire during filling of an oxygen balloon. The medicinal oxygen of a 99.98% purity degree was under a pressure of 120 atm in the balloon. At the moment when the pressure gage was removed from the valve that had not yet closed completely, flames broke out. It was found on checking that the ebonite insert placed in the lower part of the valve had burnt. In the balloon itself fragments of a resinous wooden plug were found by which the balloon had been closed off before filling. Publications provided no cue as to the possibility of ebonite or resinous materials self-igniting in oxygen. It would be rewarding to investigate experimentally such a possibility of self-ignition of ebonite in gaseous oxygen under pressure. The result might be the requirement for ebonite to be replaced by some other material more resistant to heat. There is 1 figure.

Card 1/1

APPROVED FOR RELEASE: Tuesday, August 01, 2000 CIA-RDP86-00513R0013442

"APPROVED FOR RELEASE: Tuesday, August 01, 2000 CIA-RDP86-00513R001344

RAPOPORT, K.M.

Ignition of ebonite in gaseous oxygen. Kislorod 11 no.6:31-32 '58. (MIRA 12:3)

(Oxygen) (Rubber)

APPROVED FOR RELEASE: Tuesday, August 01, 2000 CIA-RDP86-00513R0013442

"APPROVED FOR RELEASE: Tuesday, August 01, 2000 CIA-RDP86-00513R001344

RAPOPORT, K.P. (Tallin)

Treatment of postoperative air embolism by increased atmospheric pressure. Eksp. khir. i anest. 8 no.5:8-13 S-D '63. (MIRA 17:6)

APPROVED FOR RELEASE: Tuesday, August 01, 2000 CIA-RDP86-00513R0013442

"APPROVED FOR RELEASE: Tuesday, August 01, 2000 CIA-RDP86-00513R001344

RAPOPORT, Kh.M., dots., kand.tekhn.nauk

Using the transitional method of continued chords in calculating elements for pegging out curves. Trudy DIIT no.27: 206-214 '58. (MIRA 12:1)
(Railroads--Curves and turnouts) (Railroads--Surveying)

APPROVED FOR RELEASE: Tuesday, August 01, 2000 CIA-RDP86-00513R0013442

"APPROVED FOR RELEASE: Tuesday, August 01, 2000 CIA-RDP86-00513R001344

RAPOPORT, KH.M.

42561. K Voprosu O Vliyanii Oshibok Izmereniy Na Rezul'taty Opredeleniya Sdviga Po Metodu Raznostey Evol'vent. Sbornik Trudov. Dnipr'a (Dnepropetr. In-T Inzh Zh-D Transporta Im. Kaganovicha) vyp. 17, 1947, S 55-60.

APPROVED FOR RELEASE: Tuesday, August 01, 2000 CIA-RDP86-00513R0013442

"APPROVED FOR RELEASE: Tuesday, August 01, 2000 CIA-RDP86-00513R001344

[illegible], Kh. [illegible].

42561. K Voprosu o Vliyanii Oshibok Izmereniy Na Rezul'taty O[illegible] Po Metodu Raznostey Evol'vent. Sbornik Trudov. DIIT'a (Dnepropetr. In-t Inzh. Zh-d. Transporta. Im. Kaganovicha). Vyp. 17, 1947, s. 55-6[illegible]

APPROVED FOR RELEASE: Tuesday, August 01, 2000 CIA-RDP86-00513R0013442

"APPROVED FOR RELEASE: Tuesday, August 01, 2000 CIA-RDP86-00513R001344

1ST AND 2ND ORDERS

PROCESSES AND PROPERTIES INDEX

3RD AND 4TH ORDERS

13C

A-4

[illegible] metabolism in preserved cornea. T. P. Schesterikova and K. M. Rapoport (*J. Méd. Ukraine*, 1940, 10, 311—317).—The cornea of preserved eyes absorbs water and Cl from the aq. humour. K and Ca remain unchanged, while inorg. P increases. M. K.

COMMON ELEMENTS

MATERIALS INDEX

OPEN

J.S.M.-S.L.A. METALLURGICAL LITERATURE CLASSIFICATION

MATERIALS INDEX

AUTHOR INDEX

1ST AND 2ND LETTER

3RD AND 4TH ORDERS

2ND LETTER

1ST AND 2ND LETTER

APPROVED FOR RELEASE: Tuesday, August 01, 2000 CIA-RDP86-00513R0013442

"APPROVED FOR RELEASE: Tuesday, August 01, 2000 CIA-RDP86-00513R001344

RAFOPORT, Konkordiya Nikolayevna

Bio-Microscopical Research of Healing the Injured Eyeball after the Extraction of Cataracts.

Dissertation for candidate of a Medical Science degree. Chair of Eye Diseases (head, Prof. I.S. Vorob'yev) Saratov Medical Institute, 1956

APPROVED FOR RELEASE: Tuesday, August 01, 2000 CIA-RDP86-00513R0013442

"APPROVED FOR RELEASE: Tuesday, August 01, 2000 CIA-RDP86-00513R001344

[illegible], [illegible]: "Microscopic [illegible] of the process of healing of wounds to the corneal-scleral region following the operation of cataract removal." [illegible]. Saratov State Medical Inst. Saratov, [illegible].
(Dissertation for Degree of Candidate in Medical Sciences).

SO: Knizhnaya letopis', No 23, 1956.

APPROVED FOR RELEASE: Tuesday, August 01, 2000 CIA-RDP86-00513R0013442

"APPROVED FOR RELEASE: Tuesday, August 01, 2000 CIA-RDP86-00513R001344

RAPOPORT, Kh.Sh., inzh.; ANDREYEVA, N.A., inzh.; BERNATSKIY, G.V., inzh.

Shot-blast cleaning of parts. Sudostroenie 26 no.6: 55-56 Je '60. (MIRA 13:7)
(Metal cleaning--Equipment and supplies)

APPROVED FOR RELEASE: Tuesday, August 01, 2000 CIA-RDP86-00513R0013442

"APPROVED FOR RELEASE: Tuesday, August 01, 2000 CIA-RDP86-00513R001344

ASHRABOV, A.B., kand.tekhn.nauk; RAPOPORT, K.V., kand.tekhn.nauk

Shortening the heat treatment time for products made in molds and on stands (experience of the Tashkent housing construction combine). Bet. i zhel.-bet. 8 no.2:73-76 F '62. (MIRA 16:5)
(Precast concrete)

APPROVED FOR RELEASE: Tuesday, August 01, 2000 CIA-RDP86-00513R0013442

"APPROVED FOR RELEASE: Tuesday, August 01, 2000 CIA-RDP86-00513R001344

RAPOPORT, K.V.

Sulfate resistance of heat treated concrete. Sbor.nauch.trud.IashNIIS no.5:94-105 '63. (MIRA 18:1)

APPROVED FOR RELEASE: Tuesday, August 01, 2000 CIA-RDP86-00513R0013442

"APPROVED FOR RELEASE: Tuesday, August 01, 2000 CIA-RDP86-00513R001344

LARIONOVA, T.S.; RAPOPORT, K.V.

Study of the qualities of sodium sulfate and potash as additions for concrete hardeners. Sbor. nauch. trud. NII po stroi. ASiA no.4:98-107 '63. (MIRA 17:8)

APPROVED FOR RELEASE: Tuesday, August 01, 2000 CIA-RDP86-00513R0013442

"APPROVED FOR RELEASE: Tuesday, August 01, 2000 CIA-RDP86-00513R001344

KANTSEPOL'SKIY, I.S.; GLEKEL', F.L.; RAPOPORT, X.V.

Increasing the sulfate resistance of cement mortars by autoclave treatment. Uzb.khim.zhur. 8 no.4:26-37 '64. (MIRA 18:12)

1. Institut khimii AN UzSSR i Nauchno-issledovatel'skiy institut po stroitel'stvy akademii stroitel'stva i arkhitektury SSSR.

APPROVED FOR RELEASE: Tuesday, August 01, 2000 CIA-RDP86-00513R0013442

"APPROVED FOR RELEASE: Tuesday, August 01, 2000 CIA-RDP86-00513R001344

RAPOPORT, K.V.

Some problems in increasing the durability of concrete linings of irrigation canals in gypsum-bearing soils of the Golodnaya Steppe. Mat. po proizv. sil. Uzb. no.15:243-246 '60. (MIRA 14:8)

1. TSentral'naya stroitelnaya laboratoriya Minstroya Uzbekskoy SSR.
(Golodnaya Steppe—Irrigation canals and flumes)

APPROVED FOR RELEASE: Tuesday, August 01, 2000 CIA-RDP86-00513R0013442

"APPROVED FOR RELEASE: Tuesday, August 01, 2000 CIA-RDP86-00513R001344

RAPOPORT, K.V.

Concerning the use of the rapid cement testing method worked out by the Southern Scientific Research Institute for reinforced concrete products plants. Sbor. nauch. trud. NII po strei. ASIA no.4:108-109 '63. (MIRA 17:8)

APPROVED FOR RELEASE: Tuesday, August 01, 2000 CIA-RDP86-00513R0013442

"APPROVED FOR RELEASE: Tuesday, August 01, 2000 CIA-RDP86-00513R001344

21 (0)

AUTHORS: Rapoport, L., Kadmenskiy, S. SOV/48-23-7-29/31

TITLE: The Statistic Theory of the Nuclear Potential in the Approximation of the "Effective" Mass (Statisticheskaya teoriya yadernogo potentsiala v priblizhenii "effektivnoy" massy)

PERIODICAL: Izvestiya Akademii nauk SSSR. Seriya fizicheskaya, 1959, Vol 23, Nr 7, pp 918-923 (USSR)

ABSTRACT: In the introduction, the stable configuration of nucleons introduced under the term of "nuclear matter" in a number of papers of recent years and neglecting the Coulomb repulsion is dealt with. It is ascertained that in this nuclear matter the nucleons move like independent particles, and that the potential energy of nucleons during this motion does not depend on their spatial position but on their velocity. This dependence is expressed in the term of "effective" mass. In the present paper, the potential well depths and the form of the potentials are investigated, the "effective" masses also being considered. In the first part, the potential depending on the motion is developed from the statistic theory of nuclei. The ordinary statistic theory of nuclei is used as a basis, and the equations for the interaction between neutrons and positrons (1), between

Card 1/3

APPROVED FOR RELEASE: Tuesday, August 01, 2000 CIA-RDP86-00513R0013442

"APPROVED FOR RELEASE: Tuesday, August 01, 2000 CIA-RDP86-00513R001344

neutrons and neutrons (2), and between protons and protons (3) are indicated. Subsequently the equation (7) is obtained for the exchange potential of the interaction of a neutron with all protons of the nucleus from the equation (4) for small momenta by a series development. The equations (8) and (9), analogous to (7), are indicated for the exchange potential of the interaction of a neutron with all neutrons of the nucleus , as well as for the exchange potential of the interaction of a proton with all protons of the nucleus. From these equations, the potential acting upon all neutrons in the nucleus is obtained. This potential is introduced in Schrödinger's equation, and the equations (10) and (13) are obtained in this way. From these equations, the total energy is determined, and the constant of the law of forces is obtained by variation of this total energy (19). By equation (22), the Coulomb potential acting upon the protons is indicated, and finally the total potential is indicated as the sum of equations (13) and (22). The second part deals with the approximation of the "effective" mass. At first, the relation between the effective mass and the real mass of neutrons (24) is developed, and in a diagram (Fig 1) this relation is

APPROVED FOR RELEASE: Tuesday, August 01, 2000 CIA-RDP86-00513R0013442

"APPROVED FOR RELEASE: Tuesday, August 01, 2000 CIA-RDP86-00513R001344

The Statistic Theory of the Nuclear Potential in the Approximation of the "Effective" Mass SOV/48-23-7-29/31

represented in dependence on the distribution of the nucleons in the nucleus. Finally, the dependence of the potentials (12) and (13) on the distribution of the nucleons is investigated, and this dependence is shown in a diagram (Fig 2). As can be seen in a previous paper by the authors (Ref 8), better results are obtained by using the formulas (25) for the density distribution of the nucleons. There are 2 figures and 9 references, 3 of which are Soviet.

ASSOCIATION: Voronezhskiy gos. universitet (Voronezh State University)

Card 3/3

APPROVED FOR RELEASE: Tuesday, August 01, 2000 CIA-RDP86-00513R0013442