"APPROVED FOR RELEASE: Tuesday, August 01, 2000 CIA-RDP86-00513R001344

PAGE

46. Gas absorption and regeneration of cryolite 327

Ch. XVII Chlorination, Remelting and Casting of Aluminum

47. Properties of initial aluminum 333
48. Purification of aluminum by chlorination and remelting 335
49. Casting of aluminum wire bars 341

Ch. XVIII Planning of Electrolytic Aluminum Plants

50. Location 345
51. Output (efficiency) 346
52. Selection of d-c source 347
53. Operation conditions of aluminum baths connected in series 351
54. Arrangement of aluminum baths in series and determination of the main dimensions of the electrolytic workshop 358
55. Transportation 364
56. Ventilation 369
57. Equipment for the aluminum refining division 373
58. Mechanical workshop 375
59. Determination of storage space 375
60. Technical and economic calculations 376

SECTION II ELECTROLYTIC REFINING OF ALUMINUM

Ch. XIX Properties of Highly Pure Aluminum and its Application

61. Properties 383
62. Fields of application 386

APPROVED FOR RELEASE: Tuesday, August 01, 2000 CIA-RDP86-00513R0013442

"APPROVED FOR RELEASE: Tuesday, August 01, 2000 CIA-RDP86-00513R001344

PAGE

Ch. XX Development of Methods of Electrolytic Refining of Aluminum 389
63. Development of the "Two Layer" electrolytic method 393
64. Development of the "Three Layer" electrolytic method
Ch. XXI Theory of Electrolytic Refining of Aluminum 403
65. Electrochemistry of aluminum refining 405
66. Physicochemical properties of the electrolyte and aluminum alloy anodes for aluminum refining 409
67. Determination of voltage for electrolytic refining of aluminum 416
68. Mechanism of current transmission in the electrolytic refining of aluminum 418
69. Current efficiency in the electrolytic refining of aluminum
Ch. XXII Technology of Electrolytic Refining of Aluminum 420
70. Construction of baths for aluminum refining 424
71. Preparation of salts used as starting material and of the electrolyte 426
72. Preparation of aluminum alloy anode 426
73. Operation of aluminum alloy anode 437
74. Control of electrolytic aluminum refining

APPROVED FOR RELEASE: Tuesday, August 01, 2000 CIA-RDP86-00513R0013442

"APPROVED FOR RELEASE: Tuesday, August 01, 2000 CIA-RDP86-00513R001344

Elektrometallurgiya alyuminiya

75. Organization of work in the electrolytic aluminum refining workshop 439
76. Electrolytic aluminum refining from technical and commercial viewpoints 440
77. Electrolytic refining of secondary aluminum 441

SECTION III ELECTRIC MELTING OF ALUMINUM AND ITS ALLOYS

Ch. XXIII Use of Heat in Metallurgy of Aluminum Alloys
78. Development of heat processes 454
79. Advantages of electric heat processes 458

Ch. XXIV Physicochemical Principles in Production of Aluminum-Silicon Alloys from Ore
80. Difficulties in reduction of aluminum oxide 462
81. Production of aluminum alloys 472
82. Thermodynamics of reduction by carbon of aluminum oxide and silicon oxide 476
83. High-temperature fusion of aluminum and silicon alloys and their behavior in the reduction process 487
84. Conditions of joint reduction by carbon of SiO_2 and Al_2O_3 508

Ch. XXV Raw Material and Preparation of Furnace Charges
85. Ores with high alumina content and their concentration 517
86. Carbonic reducers and their properties 537

APPROVED FOR RELEASE: Tuesday, August 01, 2000 CIA-RDP86-00513R0013442

"APPROVED FOR RELEASE: Tuesday, August 01, 2000 CIA-RDP86-00513R001344

PAGE

87. Main requirements for furnace charges used for the reduction of aluminum-silicon alloys 554
88. Technology of briquetting ore charges for the reduction of aluminum-silicon alloys 562
89. Calculation of furnace charges 571

Ch. XXVI Furnaces for Smelting Aluminum-Silicon Alloys 582

90. Various charge zones in the electric furnace chambers 586
91. Effect of electric characteristics 601
92. Single-phase and three-phase electric furnaces 606
93. Determination of electrical furnaces characteristics 616
94. Some requirements for the design of furnaces 627

Ch. XXVII Reduction of Aluminum Alloys 637

95. Reduction of silicon 641
96. Reduction of ferro-aluminum 647
97. Operating conditions of the furnace in reduction of aluminum-silicon alloys 652
98. Defects in reduction of aluminum-silicon alloys and means of their prevention
99. Control of reduction of aluminum-silicon alloys

Ch. XXVIII Remelting of Secondary Aluminum-Silicon Alloys Produced by Electric Heating Process

APPROVED FOR RELEASE: Tuesday, August 01, 2000 CIA-RDP86-00513R0013442

"APPROVED FOR RELEASE: Tuesday, August 01, 2000 CIA-RDP86-00513R001344

Elektrometallurgiya alyuminiya AID 436 - I

		PAGE
100.	Properties and applications of aluminum-silicon alloys	658
101.	Production of eutectic silumin	665
102.	Obtaining of aluminum from aluminum-silicon alloys and from aluminum scrap with the help of alloy-combined metals	675
103.	Reduction of aluminum from electrothermic alloys by distillation through compounds of low valence	700
104.	Electrolytic refining of primary aluminum-silicon alloys	709
105.	Properties and applications of silicon by-products	712

Purpose: The book is intended to provide information on the subject treated for engineers, technicians and scientific workers of the aluminum industry as well as students of advanced courses in the electrometallurgy of aluminum.

Facilities: None

No. of Russian and Slavic References: Numerous Russian references in footnotes.
Available: Library of Congress

APPROVED FOR RELEASE: Tuesday, August 01, 2000 CIA-RDP86-00513R0013442

"APPROVED FOR RELEASE: Tuesday, August 01, 2000 CIA-RDP86-00513R001344

RAPOPORT, M.B.

The committee on Stalin Prizes (of the Council of Ministers USSR) in the fields of science and inventions announces that the following scientific works, popular scientific books, and textbooks have been submitted for competition for Stalin Prizes for the years 1952 and 1953. (Sovetskaya Kultura, Moscow, No. 22-40, 20 Feb - 3 Apr 1954)

Name	Name of Work	Nominated by
Belyayev, A.I. Rapoport, M.B. Firsanova, L.A.	"Electrometallurgy of Aluminum"	Moscow Institue of Nonferrous Metals and Gold imeni M.I. Kalinin

SO: W-30604, 7 July 1954

APPROVED FOR RELEASE: Tuesday, August 01, 2000 CIA-RDP86-00513R0013442

"APPROVED FOR RELEASE: Tuesday, August 01, 2000 CIA-RDP86-00513R001344

POLYAK, L.S.; RAPOPORT, M.B.

Relation between electrical and elastic properties of rocks. Prikl. geofiz. no.15:127-134 '56. (MLRA 10:1)
(Rocks--Electrical properties)

APPROVED FOR RELEASE: Tuesday, August 01, 2000 CIA-RDP86-00513R0013442

"APPROVED FOR RELEASE: Tuesday, August 01, 2000 CIA-RDP86-00513R001344

15-57-10-14620

Translation from: Referativnyy zhurnal, Geologiya, 1957, Nr 10, p 209 (USSR)

AUTHORS: Polak, L. S., Rapoport, M. B.

TITLE: The Absorption of Gamma Rays by Sedimentary Rocks (O pogloshchenii gamma-luchey osadochnymi porodami)

PERIODICAL: Prikl. geofizika, 1956, Nr 15, pp 135-139

ABSTRACT: The relationship of the absorption coefficient of gamma rays with the energy of 1.25 Mev (isotope Co^{50}) to rock density was proved experimentally. A source of gamma rays consisting of rock with a thickness $x \geq 3$ cm and an AMM-12 counter were placed in a lead chamber with walls 5 cm thick. The distance from the source to the sample was sufficiently great, in comparison to the dimension of the latter, to allow us to consider the gamma rays passing through the sample to be parallel. The counter rested against the sample on the side opposite the source, and was fully covered by the sample from direct radiation. The impulse count was obtained with the help

Card 1/2

APPROVED FOR RELEASE: Tuesday, August 01, 2000 CIA-RDP86-00513R0013442

"APPROVED FOR RELEASE: Tuesday, August 01, 2000 CIA-RDP86-00513R001344

15-57-10-14620

The Absorption of Gamma Rays (Cont.)

of apparatus of type "B." The absorption coefficient for the gamma rays was computed from the formula: $\mu = x^{-1} \ln I_0 I^{-1}$, where I and I_0 are the rates of count with the sample present and absent respectively. From the data obtained in measuring samples of clay, sandstone, anhydrite, limestone, and dolomite, it was determined that $\mu \simeq 0.5 \rho$, where ρ is rock density. This enabled the author to conclude that gamma-ray absorption for mean energy (0.5 ÷ 2 Mev) for the sedimentary rocks depends on the Compton effect, while the influence of the photoelectric effect and the formation of electron-positron intervals are negligible. The fact that μ changes only with ρ, and also the lack of influence exercised by the mineral composition of rocks, make it possible to carry gamma-gamma logging. In interpreting gamma-log curves, it should be taken into consideration that the change in the intensity of gamma radiation should be more abrupt at the contact of the radioactive stratum with a zone of large density, while the change should be more gradual at the contact with a stratum of a lesser density. For this reason, the anomalies shown by gamma-log curves may exhibit asymmetric shapes.

V. M. Zaporozhets

Card 2/2

APPROVED FOR RELEASE: Tuesday, August 01, 2000 CIA-RDP86-00513R0013442

"APPROVED FOR RELEASE: Tuesday, August 01, 2000 CIA-RDP86-00513R001344

POLAK, L.S.; RAPOPORT, M.B.

Remarks on the elastic properties of earths. Razved. i prom. geofiz. no.19:31-39 '57. (MIRA 10:11)

(Soil mechanics)

APPROVED FOR RELEASE: Tuesday, August 01, 2000 CIA-RDP86-00513R0013442

"APPROVED FOR RELEASE: Tuesday, August 01, 2000 CIA-RDP86-00513R001344

RAPOPORT, M.B.

AUTHOR: Rapoport, M.B. and Samoylenko, V.N. 136-2-8/22

TITLE: Deformation of Aluminum - Bath Cathode Blocks in the Electrolysis Process. (Deformatsiya katodnykh blokov alyuminiyevykh vann v protsesse elektroliza)

PERIODICAL: Tsvetnyye Metally, 1957, no.2, pp. 44 - 51 (USSR)

ABSTRACT: As aluminum baths continue to increase in size the accurate determination of the deformation of carbonaceous materials under realistic conditions has become more urgent. Details are given of apparatus developed for this by the authors and experimental results obtained with it are presented. The method enables deformation of cathode blocks to be measured directly during electrolysis of cryolite - alumina melts and the authors suggest that such measurements can be used to evaluate the stability of carbon cathode blocks. The effects studied include impregnation with electrolyte, composition of block, the molar Na F/AlF, ratio in the electrolyte, additions to the electrolyte of CaF_2, temperature, current density, carbide formation and applied mechanical load. From the results obtained a more thorough appreciation of the interaction between cathode blocks and various components of the bath is reached. Besides tabulations the results are shown graphically as relative deformation time for different levels of the factors studied.

1/2

APPROVED FOR RELEASE: Tuesday, August 01, 2000 CIA-RDP86-00513R0013442

"APPROVED FOR RELEASE: Tuesday, August 01, 2000 CIA-RDP86-00513R001344

Deformation of Aluminum - Bath Cathode Blocks in the Electrolysis Process. 136-2-8/22

2/2 There are 7 figures and 2 tables.

ASSOCIATION: VAMI and NIIZhB

AVAILABLE:

APPROVED FOR RELEASE: Tuesday, August 01, 2000 CIA-RDP86-00513R0013442

"APPROVED FOR RELEASE: Tuesday, August 01, 2000 CIA-RDP86-00513R001344

Translation from: Referativnyy zhurnal. Metallurgiya, 1958, Nr 12, p 56 (USSR) SOV/137-58-12-24328

AUTHORS: Rapoport, M. B., Tkachenko, V. A.

TITLE: Production of Titanium Lacquers (Proizvodstvo titanovykh lakov)

PERIODICAL: V sb.: Legkiye metally. Nr 4. Leningrad, 1957, pp 108-111

ABSTRACT: Studies by VAMI [All-Union Aluminum and Magnesium Institute] on the technology of production of Ti slag from ilmenite concentrate are presented. Experimental melts yield slag containing 1-2% FeO and 80-90% TiO_2.

M. M.

Card 1/1

APPROVED FOR RELEASE: Tuesday, August 01, 2000 CIA-RDP86-00513R0013442

"APPROVED FOR RELEASE: Tuesday, August 01, 2000 CIA-RDP86-00513R001344

SOV/137-58-8-16636

Translation from: Referativnyy zhurnal, Metallurgiya, 1958, Nr 8, p 55 (USSR)

AUTHORS: Rapoport, M.B., Oksyuzova, Ye.I.

TITLE: Influence of the Composition and Properties of Cathode Blocks on the Service Life of Aluminum-cell Floors (Vliyaniye sostava i svoystv katodnykh blokov na srok sluzhby podiny alyumini-yevogo elektrolizera)

PERIODICAL: Byul. tsvetn. metallurgii, 1957, Nr 8, pp 76-80

ABSTRACT: Various methods are used to show that Na precipitated in the cathode region reacts actively with carbon blocks and causes deformation thereof. In the action of Na upon cathode blocks, the degree of destruction depends upon the structural characteristics of the C material of which the cathode blocks are composed. Thus, the coefficient of deformation of petroleum coke in electrolysis is 31.5, that of pitch coke is 25.0, that of foundry coke is 23.7, that of carbonized anthracite coal 6.6, and of graphite 1.25, and disintegration in Na fumes, in terms of petroleum coke taken as 100%, is respectively 80-86, 70-77, 20-31, and 1.5-2.0. This difference among C materials depends upon the degree of molecular ordering of the

Card 1/2

APPROVED FOR RELEASE: Tuesday, August 01, 2000 CIA-RDP86-00513R0013442

"APPROVED FOR RELEASE: Tuesday, August 01, 2000 CIA-RDP86-00513R001344

SOV/137-58-8-16636

Influence of the Composition and Properties of Cathode Blocks (cont.)

hexagonal lattices of the graphite which constitute the basis of the structure of the C materials under examination. At one of the aluminum plants the average service life of baths made of blocks in which petroleum coke is used as filler is 27 months, and that of baths using extruded graphite blocks is 44 months. If the C materials be arranged in a series of declining deformability and destructibility during electrolysis - petroleum coke, pitch coke, carbonized anthracite coal and graphite - the sequence referred to above is arrived at. On the basis of industrial-scale experiments conducted in accordance with the results of the investigations described, the addition of 20-25% artificial graphite or 10-12% flake graphite to the mix used for extrusion of cathode blocks is to be deemed optimal.

I.G.

1. Electrolytic cells--Life expectancy 2. Carbon--Chemical reactions
3. Sodium--Chemical reactions

Card 2/2

APPROVED FOR RELEASE: Tuesday, August 01, 2000 CIA-RDP86-00513R0013442

"APPROVED FOR RELEASE: Tuesday, August 01, 2000 CIA-RDP86-00513R001344

SOV/137-58-8-16637

Translation from: Referativnyy zhurnal, Metallurgiya, 1958, Nr 8, p 56 (USSR)

AUTHOR: Rapoport, M.B.

TITLE: Effect of Thermal Factors on the Life of Aluminum-cell Floors (Vliyaniye termicheskikh faktorov na stoykost' podiny alyuminiyevykh elektrolizerov)

PERIODICAL: Tr. Vses. alyumin.-magn. in-ta, 1957, Nr 39, pp 337-356

ABSTRACT: The rapid heating and the high value of the thermal gradient in the heating of various types of cathode blocks does not affect their strength. Tests for "thermal shock", performed by immersion of a cold specimen (halfway) into molten CaF_2 at 1500°C, demonstrate the high heat stability of carbon blocks (CB). Preliminary heating to high temperature (1750°C) increases the life of CB. When specimens of various types of cathode blocks and other carbonaceous materials were heated ten times to 1000° and chilled in cold water each time, no destruction resulted. However, the electrical resistivity of the specimens rose 5% after these 10 alternations of thermal condition, and the mechanical strength rose as well. Under the influence of Na, the specimens that had been tested for heat stability

Card 1/2

APPROVED FOR RELEASE: Tuesday, August 01, 2000 CIA-RDP86-00513R0013442

"APPROVED FOR RELEASE: Tuesday, August 01, 2000 CIA-RDP86-00513R001344

SOV/137-58-8-16637

Effect of Thermal Factors on the Life of Aluminum-cell Floors

underwent less destruction than those not previously subjected to the effects of heat. Petroleum- and foundry-coke specimens showed maximum firing shrinkage when brought to 700°, shrinkage of industrial cathode blocks being negligible. Heating to 950° does not reduce the mechanical strength of CB, but increases it considerably. In the 20-850° interval, the coefficient of linear expansion of CB that had not yet been used as cathode material was $(2.0-2.6)\cdot 10^{-6}$. The magnitude of the coefficient of expansion of blocks that had already seen use as cathodes was considerably higher. These blocks underwent considerable thermal deformations. The results of the investigations provide definite confirmation of the high heat stability of CB and the erroneousness of ascribing the destructive effect to "thermal shock", temperature gradients within the body of the block, or to "overheating" of carbonaceous materials when fired prior to the starting of the bath. The coefficient of linear expansion of the electrolytes used in industry is $(27-30)\cdot 10^{-6}$ in the 300-800° interval. This value is 12-15 times as high as the coefficient of thermal expansion of CB. The most destructive influence is that of temporary shutting-off ("freezing") of operating baths with carbonaceous bottoms subject to Na effects and impregnated with electrolyte. At one plant, the average service life of baths that had been "frozen" was only 542 days, while those not subjected to "freezing" lasted 1145 days. 1. Electrolytic cells--Life expectancy

Card 2/2 2. Electrolytic cells--Temperature factors 3. Aluminum I.G.
--Electrolysis

APPROVED FOR RELEASE: Tuesday, August 01, 2000 CIA-RDP86-00513R0013442

"APPROVED FOR RELEASE: Tuesday, August 01, 2000 CIA-RDP86-00513R001344

Rapoport, M.B.

SOV/137-58-8-16638

Translation from: Referativnyy zhurnal, Metallurgiya, 1958, Nr 8, p 56 (USSR)

AUTHOR: Rapoport, M.B.

TITLE: Employment of Sodium Absorption by Lead to Study Certain Phenomena in the Vicinity of an Aluminum-bath Cathode (Primeneniye sposoba pogloshcheniya natriya svintsom dlya izucheniya nekotorykh yavleniy v oblasti katoda alyuminiyevoy vanny)

PERIODICAL: Tr. Vses. alyumin.-magn. in-ta, 1957, Nr 39, pp 357-367

ABSTRACT: Investigations performed in 1951-1952 were the first to determine that metallic Na is the basic destructive agent working upon the carbon cathode blocks of an Al bath. In this connection an experimental study is made of the amount of Na penetrating into carbon blocks in accordance with various cathode-process conditions. It is established in passing that Na penetrating through the carbon cathode reaches the fireclay brick and is absorbed thereby with reduction of the oxides and formation of a dark vitreous mass. Comparison of the properties of the different C materials shows that at 810°C, Pb in a carbonized-anthracite coal vessel contains 2.87% Na, while its Na content

Card 1/2

APPROVED FOR RELEASE: Tuesday, August 01, 2000 CIA-RDP86-00513R0013442

"APPROVED FOR RELEASE: Tuesday, August 01, 2000 CIA-RDP86-00513R001344

SOV/137-58-8-16638

Employment of Sodium Absorption by Lead (cont.)

is 1.6% in a foundry-coke vessel, and 3.85% in a pitch-coke vessel when these vessels are held in Na fumes. Upon electrolysis, if the Pb is enclosed in a carbon cathode, the amount of Na in the cathode Pb was 0.025, 0.32, 0.49, and 2.67%, respectively, with electrolyte $NaF:AlF_3$ ratios of 1.7, 2.5, 3.0, and 5.0. The electrolysis was run with Al_2O_3 and Al in the electrolyte. If the electrolyte does not contain Al_2O_3 but does contain Al, the quantity of Na in the cathodic Pb declines. Industrial practice has established that addition of CaF_2 to the electrolyte has a favorable effect upon the life of a carbon cathode. Experiments in displacing sodium by Al in various electrolytes in the presence of CaF_2 and in its absence show that the amount of Na precipitated declines because of the presence of CaF_2 in the electrolyte, and that favorable conditions for cathode-block service are thereby created.

I.G.

1. Sodium--Absorption 2. Lead--Absorptive properties 3. Cathodes (Electrolytic cell) --Performance 4. Electrolytes--Properties 5. Aluminum--Electrolysis

Card 2/2

APPROVED FOR RELEASE: Tuesday, August 01, 2000 CIA-RDP86-00513R0013442

"APPROVED FOR RELEASE: Tuesday, August 01, 2000 CIA-RDP86-00513R001344

Rapoport, M. B.

Country : HUNGARY H-12
Category : Chemical Technology. Electrochemical Industries. Electroplating. Galvanic Cells
Abs. Jour : Ref Zhur-Khimiya, No 14, 1959, No 50256

Author : Rapoport, M. B.
Institute : -
Title : Processes Taking Place on the Cathode of an Electrical Bath Used for the Obtainment of Aluminum
Orig Pub. : Kohasz. lapok, 1958, 13, No 7, 322-326

Abstract : Effect of sodium vapors on the destruction of carbon cathodes (C) was investigated. These subject to greatest destruction are C derived from petroleum coke; the most stable ones are graphite C. The degree of destruction is inversely proportional to temperature. For the determination of a degree of deformation of C as affected by Na and for the variation of Na quantity penetrating into C, special apparatus-es then

Card: 1/2

Country : H-12

APPROVED FOR RELEASE: Tuesday, August 01, 2000 CIA-RDP86-00513R0013442

"APPROVED FOR RELEASE: Tuesday, August 01, 2000 CIA-RDP86-00513R001344

86223

S/049/60/000/009/001/004
E201/E191

9.9865

AUTHOR: Rapoport, M.B.

TITLE: Techniques of Ultrasonic Modelling of "Seismic" Processes

PERIODICAL: Izvestiya Akademii nauk SSSR, Seriya Geofizicheskaya, 1960, No. 9, pp.1309-1315

TEXT: The author deals with ultrasonic modelling of seismic waves using two identical piezoelectric transducers, one of which serves as a radiator and the other as a receiver. A short electric pulse is applied to the radiator, producing natural vibrations of the piezoelectric crystal. The vibrations are passed along a two-dimensional model to a receiver which is connected to a wide-band amplifier and an oscilloscope. The author discusses formation of wave pulses, directional properties of transducers and suppression of Rayleigh waves. The author used a "seismoscope" УЗС-2 (UZS-2) with an amplifier modified by introduction of one-section П-filters. The desired frequency and pulse form (Fig.1) were obtained by using an appropriate filter. The use of filters for suppression of natural vibrations of piezoelectric transducers avoided the dependence of the pulse form on the degree of damping

Card 1/3

APPROVED FOR RELEASE: Tuesday, August 01, 2000 CIA-RDP86-00513R0013442

"APPROVED FOR RELEASE: Tuesday, August 01, 2000 CIA-RDP86-00513R001344

86223

S/049/60/000/009/001/004
E201/E191

Techniques of Ultrasonic Modelling of Seismic Processes

of transducers, on the contact between the transducers and the model, and on other factors. The filters ensured reproducibility of the oscillograms. Suppression of natural piezoelectric vibrations of transducers by means of filters made it possible to use any piezoelectric crystals, including those poorly matched with the model. Using piezoelectric transducers at frequencies much lower than their natural frequencies, it was possible to avoid undesirable directional characteristics (Figs 2, 3) so that the transducers could be regarded as point sources. Surface (Rayleigh) waves could be partly suppressed (Fig. 4) by coating the models with a thin layer of plasticine; further suppression of these waves (Fig. 5) could be obtained by placing of one of the transducers below the surface of the model. The author deals only with two-dimensional models, but filters can be used also in three-dimensional solid and liquid models.
There are 5 figures and 3 Soviet references.

Card 2/3

APPROVED FOR RELEASE: Tuesday, August 01, 2000 CIA-RDP86-00513R0013442

"APPROVED FOR RELEASE: Tuesday, August 01, 2000 CIA-RDP86-00513R001344

86223

S/049/60/000/009/001/004
E201/E191

Techniques of Ultrasonic Modelling of Seismic Processes

ASSOCIATION: Moskovskiy ordena trudovogo Krasnogo Znameni Institut neftekhimicheskoy i gazovoy promyshlennosti im. I.M. Gubkina (Moscow Institute of Petroleum Chemical and Gas Industry imeni I.M. Gubkin, Awarded the Order of the Red Banner of Labour)

SUBMITTED: March 9, 1960

Card 3/3

APPROVED FOR RELEASE: Tuesday, August 01, 2000 CIA-RDP86-00513R0013442

"APPROVED FOR RELEASE: Tuesday, August 01, 2000 CIA-RDP86-00513R001344

S/552/60/000/028/001/006
H000/H000

AUTHOR: Rapoport, M.B.

TITLE: On the problem of the automatic construction of seismic profiles

SOURCE: Prikladnaya geofizika (sbornik statey), no. 28, 1960, 3-9

TEXT: Automatic construction of seismic profiles is now possible through the use of reproducible optical and magnetic records. Non-Soviet technical publications of recent years have dealt with numerous types of automatic profile construction devices. Although these instruments differ in their data input systems (optical and magnetic records), computation systems (mechanical, electromechanical, and electronic), and in the form in which the results are obtained (on a time or depth scale), all are still based on the same principle. In the alternate reproduction of field records, a kinematic time variable correction for the distance from the shot point, which results in the straightening of the hyperbolic cophasal axes on seismic tapes, is introduced into the time scale. This kinematic correction

Card 1/2

CIA-RDP86-00513R00

"APPROVED FOR RELEASE: Tuesday, August 01, 2000 CIA-RDP86-00513R001344

33050

S/169/61/000/012/014/089
D228/D305

3,9300 (1019,1109,1327) 2406

AUTHOR: Rapoport, M. B.

TITLE: A seismolocating device for the automatic construction of seismic sections

PERIODICAL: Referativnyy zhurnal, Geofizika, no. 12, 1961, 26, abstract 12A263 (Tr. Mosk. in-ta neftekhim. i gaz. prom-sti, 1960, no. 31, 161-168)

TEXT: The idea of the device is based on the principle of controllable directed reception (CDR). The section is obtained on the screen of an electron-ray tube whose scanning is synchronized with the summation of the reproduced field recordings by the method of CDR, the brightness of the luminous speck being modulated by the summary signal. The scanning forms on the tube's screen a radial diagram for the set law of the change of velocity with depth. The section is constructed simultaneously according to several summation bases. After selection of the

Card 1/2

APPROVED FOR RELEASE: Tuesday, August 01, 2000 CIA-RDP86-00513R0013442

"APPROVED FOR RELEASE: Tuesday, August 01, 2000 CIA-RDP86-00513R001344

23050
S/169/61/000/012/014/039
D228/D305

A seismolocating device...

optimum filtration and mean velocity, the image is photographed on the screen of the electron-ray tube. The photographs also represent the section. [Abstracter's note: Complete translation.]

Card 2/2

APPROVED FOR RELEASE: Tuesday, August 01, 2000 CIA-RDP86-00513R0013442

"APPROVED FOR RELEASE: Tuesday, August 01, 2000 CIA-RDP86-00513R001344

Rapoport M.B.

S/180/60/000/02/028/028
E071/E135

AUTHOR: Ogurtsov, S.V.

TITLE: Scientific Conference on the Metallurgy, Chemistry and Electrochemistry of Titanium

PERIODICAL: Izvestiya Akademii nauk SSSR, Otdeleniye tekhnicheskikh nauk, Metallurgiya i toplivo, 1960, Nr 2, pp 167-168 (USSR)

ABSTRACT: The conference took place on January 14-20 1960 in Moscow in the Institute of Metallurgy, Academy of Sciences, USSR. It was organised by the Committee for Coordination of Scientific Research on Titanium. About 400 representatives of academic and research institutions and works participated in the conference. The conference was divided into four sections: 1) raw materials and smelting of ores; 2) chemical technology and chlorination; 3) metallothermic methods of smelting titanium; and 4) electrolysis. The following papers were read:

Card 1/3

Metallurgical evaluation of some new deposits (B.B. Dmitrovskiy); State and prospects of improving the technology of smelting of ilminite concentrates (V.A. Rezhnichenko and V.I. Solov'yev);

Card 2/3

Thermodynamic investigations of titanium compounds (F.B. Khalimov and V.A. Reznichenko); An investigation of the process of reduction of iron-titanium concentrates with carbon (M.B. Rapoport); Some hydrodynamic and kinetic features of the process of chlorination of titanium dioxide in molten chlorides (Kim Men-rin); Oxidation of titanium tetrachloride with oxygen (G.S. Moynev, B.N. Melent'yev, V.A. Rezhnichenko); Utilisation of ilminite concentrates for the production of titanium dioxide pigment by the sulphuric acid method (M.L. Borodina, S.B. Shaykevich, N.A. Gubarova); An investigation of some properties of the system $TiCl_4$ - $AlCl_3$ - $FeCl_3$ (N.K. Druzhinina); An investigation of phase equilibria liquid-vapour in systems formed by titanium tetrachloride with chloroanhydrides of mono- and trichloroacidic acids (G.V. Seryakov, S.A. Vaks, L.S. Sidorina); Determination of the summary content of carbon in titanium tetrachloride (G.V. Seryakov, S.A. Vaks, I.M. Golovanov); Basic conditions for standardised

Card 3/3

results of the process of production of titanium by the magnesium thermite method (S.V. Ogurtsov, V.A. Reznichenko, V.K. Ustinov, V.I. Kozhevnikov, A.I. Dedkov); On the two stage method of production of titanium by the sodium thermite method (V.A. Reznichenko, S.V. Ogurtsov); Production of a high purity titanium (V.I. Batashev); The influence of the content of chlorine in a high purity titanium sponge on the process of smelting and on the quality of the metal produced (G.M. Vaynshteyn); The production of titanium and its alloys by refining of black anodes (Academician I.P. Bardin, A.D. Khromov, V.I. Lukashin); On the theory of refining of titanium (V.A. Bukhodskiy); Production of titanium by electrolysis of titanium dioxide in fluoride-chloride melts (I.P. Bardin, A.A. Kazayn); Electrolytic production of titanium from chloride-fluoride melts (V.M. Ioffe, N.N. Rozanov, N.A. Lyubimova); Electrolytic refining of titanium waste products (V.M. Lozovatskiy); and a number of other reports.

There are no figures, tables or references.

APPROVED FOR RELEASE: Tuesday, August 01, 2000 CIA-RDP86-00513R0013442

"APPROVED FOR RELEASE: Tuesday, August 01, 2000 CIA-RDP86-00513R001344

S/169/61/000/011/001/065
D228/D304

AUTHORS: Polak, L.S., and Rapoport, M.B.

TITLE: The relation of the velocity of elastic longitudinal waves to certain physical properties of sedimentary rocks

PERIODICAL: Referativnyy zhurnal, Geofizika, no. 11, 1961, 6, abstract 11A55 (V sb. Prikl. geofizika, no. 29, M., 1961, 12 - 19)

TEXT: The results are described for studying the velocities of longitudinal waves in specimens of sedimentary rocks for boreholes on the South Emba uplift and the Mangyshlak peninsula by the ultrasonic impulse method. On the whole the data of the velocity measurements coincided with the results of the recoil coefficient determinations; the presence of the relation of the velocity characteristics to the porosity, density, and electric resistance was confirmed. However, the study of the influence of dampness on the velocity in sandstone specimens led to new conclusions. The complex cha-

Card 1/2

APPROVED FOR RELEASE: Tuesday, August 01, 2000 CIA-RDP86-00513R0013442

"APPROVED FOR RELEASE: Tuesday, August 01, 2000 CIA-RDP86-00513R001344

The relation of the velocity of ... S/169/61/000/011/001/065
D228/D304

racter of the dependence of the velocity on the saturation of pores by liquid was disclosed, and the correlational dependence between the velocity and coefficient of recoil was observed. In the authors opinion the latter is connected with the attenuation of elastic waves in the rock. 10 references. [Abstractor's note: Complete translation].

Card 2/2

APPROVED FOR RELEASE: Tuesday, August 01, 2000 CIA-RDP86-00513R0013442

"APPROVED FOR RELEASE: Tuesday, August 01, 2000 CIA-RDP86-00513R001344

RAPOPORT, M.B.

Determining the frequency dependence of ultrasound absorption from the spectra of transient waves. Prikl. geofiz. no.31:77-84 '61. (MIRA 15:3)

(Ultrasonic waves--Industrial applications)

APPROVED FOR RELEASE: Tuesday, August 01, 2000 CIA-RDP86-00513R0013442

"APPROVED FOR RELEASE: Tuesday, August 01, 2000 CIA-RDP86-00513R001344

3.9300

S/049/61/000/002/002/012
D242/D301

AUTHOR: Rapoport, M. B.

TITLE: On the reflection of seismic waves from non-specular boundaries

PERIODICAL: Akademiya nauk SSSR. Seriya geofizicheskaya. Izvestiya, no. 2, 1961, 185-196

TEXT: Ordinary methods of interpreting the reflection seismograms obtained in geophysical prospecting by correlating several traces are based on the assumption of specular reflection at the interfaces. Inter alia, the PHП (RNP) method has revealed the non-specular character of the reflection at many important types of interface. In the article, a relatively simple theory is developed to account for what happens when a plane wave of a single frequency arrives at a "rough" interface, idealized as a sinusoidal ripple parallel to one direction in an infinite plane sheet. Some generalizations on the case of an impulse from a point source arriving at a randomly rough surface are argued on a purely verbal basis. Experiments on a model were carried out and confirmation obtained

Card 1/10

APPROVED FOR RELEASE: Tuesday, August 01, 2000 CIA-RDP86-00513R0013442

"APPROVED FOR RELEASE: Tuesday, August 01, 2000 CIA-RDP86-00513R001344

22424

S/049/61/000/002/002/012
D242/D301

On the reflection...

for the predictions of the theory. [Abstracter's note: RNP is described in L. A. Ryabinkin - Rezul'taty i perspektivy primeneniya matoda RNP (Results and Future Uses of the RNP Method) Sb. "Promyslovyye i razvedochnyye geofizicheskiye issledovaniya". Gostoptekhizdat, M., 1960.) and could be translated as "variable directional reception", and is apparently the well-known method of superposing electrically the recorded traces with a variable phase-shift between each, thus generating a signal representing what would have been observed from a line of geophones tilted at an angle to the surface]. The author determines θ_m - the angle between the normal and the direction of the subsidiary reflection of order m - from

$$\sin\theta_m' = \sin\theta + m\frac{\lambda}{t}. \qquad (1)$$

where θ = angle between the normal to the 'mean' interface and the direction of specular reflection, λ = wavelength.

Card 2/10

APPROVED FOR RELEASE: Tuesday, August 01, 2000 CIA-RDP86-00513R0013442

"APPROVED FOR RELEASE: Tuesday, August 01, 2000 CIA-RDP86-00513R001344

If $\sin \theta_m > 1$, such a mode is rapidly attenuated away from the interface. The use of ray geometry and plane wave theory is justified by appealing to the condition that $h \gg l$ so that only a very small part of each "ripple" of the interface is involved in reflection. The author then establishes an equation for N by arguing that the path difference between the rays from the center to the edge of the reflecting area must not exceed $\lambda/4$. This leads to Eq (2)

$$N = \frac{\sqrt{2hl}}{l} + 1. \qquad (2)$$

where h = depth from surface to 'mean' interface, taken as parallel to the surface, l = periodical length of the roughness of the interface, N - number of periods of roughness in first half-period zone. If N is sufficiently large for every frequency component in a wavelet, the plane-wave solution can be generalized to apply also to an impulse from a point source. Since the arrangement measures the apparent phase or group velocity in the line of observation, if v is the velocity of compressional waves in the upper medium

APPROVED FOR RELEASE: Tuesday, August 01, 2000 CIA-RDP86-00513R0013442

"APPROVED FOR RELEASE: Tuesday, August 01, 2000 CIA-RDP86-00513R001344

S/049/61/000/002/002/012
D242/D301

On the reflection...

[Abstracter's note: Shear waves are ignored as being of much smaller amplitude under the particular conditions] and v_ϕ is the apparent phase velocity then

$$v_\phi = \frac{v}{\sin\theta_m}. \qquad (3)$$

For the author's purpose

$$\lambda_\phi = \frac{\lambda}{\sin\theta_m}. \qquad (5)$$

The geometry leads to

$$\operatorname{tg}\theta + \operatorname{tg}\theta_m = \frac{x}{h}. \qquad (6)$$

where x = distance along the surface from source to geophone and for small θ, θ_m

$$\sin\theta_m = \frac{xl + m\lambda h}{2hl}$$

Card 4/10

APPROVED FOR RELEASE: Tuesday, August 01, 2000 CIA-RDP86-00513R0013442

"APPROVED FOR RELEASE: Tuesday, August 01, 2000 CIA-RDP86-00513R001344

and hence

$$v = \frac{2hlv}{xl + m\ h} = \frac{2hlvf}{xlf + mvh} \qquad (6a)$$

$$\frac{dv}{d} = -\frac{vm}{xl}, \quad v_{gr} = \frac{2vh}{x} \qquad (7)$$

where v_{gr} is the apparent group velocity. Since usually the arrival time of an impulse is taken to be that of the fastest rising or first wave of the group, the author argues that v_{gr} is that appropriate to f_2, the upper frequency limit of the spectrum of the impulse. Using the symbol $t_{gr}(x)$ for the arrival time at a geophone placed at x, by integration of Eq. 7 there results

$$t_{gr}(x) = \frac{x^2 + b}{4vh} \qquad (8)$$

APPROVED FOR RELEASE: Tuesday, August 01, 2000 CIA-RDP86-00513R0013442

"APPROVED FOR RELEASE: Tuesday, August 01, 2000 CIA-RDP86-00513R001344

22424

S/049/61/000/002/002/012
D242/D301

On the reflection...

The constant b is derived from the condition on t_{gr} at x = 0. At this point the principal wave and subsidiary wavelets coincide so that

$$\sin \theta_m = -\sin \theta = \frac{m\lambda}{2l} = \frac{vm}{2lf} \qquad (8a)$$

and

$$t_{rp}(0) = \frac{2h}{v\cos\theta} = \frac{2h}{v\sqrt{1-\left(\frac{mv}{2lf_1}\right)^2}} \approx \frac{2h}{v}\left(1+\frac{m^2v^2}{8l^2f_1^2}\right). \qquad (9)$$

and after straightforward reduction

$$t_{gr}(x) = \frac{x^2}{4vh} + \frac{2h}{v} + \frac{m^2vh}{4l^2f_1^2} = \frac{x^2}{4vh} + \frac{2h}{v} + \Delta t \qquad (10)$$

By putting m = 0 in (10) the solution for specular reflection is

Card 6/10

APPROVED FOR RELEASE: Tuesday, August 01, 2000 CIA-RDP86-00513R0013442

"APPROVED FOR RELEASE: Tuesday, August 01, 2000 CIA-RDP86-00513R001344

On the reflection...

obtained as usual, the arrival time being denoted by $t_{refl.}$. By using (6a), the time displacement of the subsidiary wavelets from a base line of length x t_m, may be derived from

$$\frac{\delta t_m}{\delta x} = \frac{1}{r_\phi(f_0)} = \frac{x}{2ch} + \frac{m}{2f_0 l}. \qquad (11)$$

f_o is the average or apparent frequency of the impulse. By putting m - 0 in this the author obtains δt_{refl} which is the time displacement of the specular reflections from a base-line δx and hence

$$\delta t_m - \delta t_{refl.} = \frac{m\delta x}{2f_0 l} \qquad (12)$$

holds along the whole fixed line of observation. These results describe the appearance of all the geophone traces within the prescribed limitations. Besides the specularly reflected wave there is a whole series of subsidiary wavelets. Each of these is propagated along the line of observation with dispersion,

APPROVED FOR RELEASE: Tuesday, August 01, 2000 CIA-RDP86-00513R0013442

"APPROVED FOR RELEASE: Tuesday, August 01, 2000 CIA-RDP86-00513R001344

S/049/61/000/002/002/012
D242/D301

On the reflection...

which leads to the appearance of short lines of constant phase whose gradient is given by (11), making a constant angle given by (12) with the envelope maximum of the group, which is displaced by Δt from the specular reflection. Experiments were carried out with a laboratory adaptation of RNP using barium titanate transducers on the edge of a plexiglass sheet 1300 x 750 x 5 mm. One edge was sawn appropriately to give a periodic reflecting boundary. The opposite edge carried an 80 cm line of 41 receivers and 5 "explosion" points. The traces showed a characteristic frequency of about 40 kc/s, corresponding to a wave-length of about 5.5 cm. The main features of the apparatus have already been described by M. B. Rapoport (Ref. 11: K metodike seysmicheskogo ul'trazvukovogo modelirovaniya. Izv. AN SSSR, ser. geofiz., No.9, 1960). The features of the above theory were well demonstrated. The only quantitative comparison was in a series of three experiments with l = 8 cm and a pattern of semicircular "bites" taken out of the edge of radii 1:1.8 and 2.5 cm. Here Δt (obser.) was $\pm$ (21-24)

Card 8/10

APPROVED FOR RELEASE: Tuesday, August 01, 2000 CIA-RDP86-00513R0013442

"APPROVED FOR RELEASE: Tuesday, August 01, 2000 CIA-RDP86-00513R001344

S/049/61/000/002/002/012
D242/D301

On the reflection...

μsec and Δt (calc) was 22 mm μ sec. Hence m = ±1. It was shown that higher orders would have been expected to be attenuated. There are 6 figures and 20 references: 17 Soviet-bloc and 3 non-Soviet-bloc. The references to the English-language publications read as follows: M. A. Biot, Reflection on a rough surface from an acoustic point source. J. Acoust. Amer., No 11, 1957; La-Caske, Note on backscattering of sound from sea surface. J. Acoust. Soc. Amer., No. 6, 1958; V. Twersky, On scattering and reflection of sound by rough surfaces. J. Acoust. Soc. Amer. No. 2, 1957.

ASSOCIATION: Institut neftekhimicheskoy i gazovoy promishlennosti im. I. M. Gubkina (Institute of the Petrochemical and Gas Industry im. I. M. Gubkin)

SUBMITTED: September 20, 1960

Card 9/10

APPROVED FOR RELEASE: Tuesday, August 01, 2000 CIA-RDP86-00513R0013442

"APPROVED FOR RELEASE: Tuesday, August 01, 2000 CIA-RDP86-00513R001344

RAPOPORT, M.B.

Photoelectronic apparatus for studying disperse systems by means of light scattering. Trudy Inst. nefti AN Kazakh.SSR 4:168-170 '61.
(MIRA 16:4)

(Colloids) (Light--Scattering)

APPROVED FOR RELEASE: Tuesday, August 01, 2000 CIA-RDP86-00513R0013442

"APPROVED FOR RELEASE: Tuesday, August 01, 2000 CIA-RDP86-00513R001344

26862
S/080/61/034/004/003/012
A057/A129

18.3100 1521

AUTHORS: Rapoport, M. B., Kozlov, V. M.

TITLE: Reduction of iron-titanium concentrates in the solid phase without melting (I. Communication)

PERIODICAL: Zhurnal prikladnoy khimii, v. 34, no. 4, 1961, 734 - 743

TEXT: Reduction kinetics of iron oxides and titanium dioxide in iron--titanium concentrates were investigated in the solid phase at 1,000 - 1,300°C, i.e., until slag formation. This study was carried out since in literature there is no uniform idea on reduction kinetics in iron-titanium concentrates. The latter contain usually ilmenite ($FeO \cdot TiO_2$), arizonite ($Fe_2O_3 \cdot 3TiO_2$) and perovskite ($CaO_2 \cdot TiO_2$). The reduction process of ilmenite was studied frequently, but different opinions were expressed. Thus Ye. N. Snopova and N. I. Rotkov (Ref. 1: Sovetskaya metall., 12, 11 - 19, 1936) and E. V. Britske et al. (Ref. 2: DAN SSSR, OTN, 2, 9, 1941) assumed that decomposition to FeO and TiO_2 occurs before iron suboxide reduction. Contrary to this opinion V.K. Antonov (Ref. 3: Khimiya i tekhnologiya redkikh elementov (Chemistry and technology of rare elements) Ural'skiy filial AN SSSR, Sverdlovsk, 81 - 94, 1958), G. I. Chu-

Card 1/9

APPROVED FOR RELEASE: Tuesday, August 01, 2000 CIA-RDP86-00513R0013442

"APPROVED FOR RELEASE: Tuesday, August 01, 2000 CIA-RDP86-00513R001344

26862
S/080/61/034/004/003/012
A057/A129

Reduction of iron-titanium concentrates .....

farev et al. (Ref. 4: Tr. inst. metall. AN SSSR, Ural'skiy filial, 2, 9 - 40, 1958) and A. S. Tumarev (Ref. 8: Sb. "Problemy metallurgii" ("Metallurgical problems"), Izd. AN SSSR, M., 23 - 28, 1959) estimated that reduction of complex oxides occurs without preceding decomposition. Another problem is the question if reduction of oxides occurs more intensively in liquid or solid state, and if the reduction rate of ferrous oxide is considerably higher in liquid than in solid slag. Therefore in the present work the interaction between solid carbon (anthracite) with iron and titanium oxides was investigated in three iron-titanium ore concentrates from deposits in Kusinsk, Irshinsk and Samotkansk (Tab. 1,2). The latter contains Fe_2O_3 and no FeO, while the other two contain mainly ilmenite. The test sample was prepared, in general, by mixing 100 parts of concentrate with 13 parts of anthracite (or 9.5 parts for the Samotkansk concentrate), using sulfite liquor as binder for the subsequent briquetting. The briquettes were tested in a silite oven at 1,000, 1,100, 1,200, and 1,300°C by heating the latter by means of an PHO-250-10 (RNO-250-10) autotransformer. In the product Fe_{total}, Fe_{metal}, Ti_{total} and lower titanium oxides (Ti^{2+} + Ti^{3+}) were determined. The sum of di- and tri-valent titanium was determined by the improved method described by L. I. Veselago (Ref. 9: ZhAKh, 13, 5, 562 - 566, 1958). From the ob-

Card 2/9

APPROVED FOR RELEASE: Tuesday, August 01, 2000 CIA-RDP86-00513R0013442

"APPROVED FOR RELEASE: Tuesday, August 01, 2000 CIA-RDP86-00513R001344

26862
S/080/61/034/004/003/012
A057/A129

Reduction of iron-titanium concentrates ....

tained results the degree of reduction of iron- and titanium oxides was estimated. The highest reduction rate of FeO has the Kusinsk concentrate containing less TiO_2 and more iron oxides and admixtures (CaO, and MgO) than the other concentrates. The lowest reduction rate shows the Irshinsk concentrate, having bigger grains and less admixtures than the other two. Curves showing the effect of duration of a constant 1,000°C temperature have two segments; until 0.5-0.8 hours the kinetic range of the reduction process and above 0.5-0.8 hours the diffusion range. The change from kinetic to the diffusion process is due to the decrease in contact surface between the ore and anthracite. Tests with bigger charges, using anthracite and petroleum coke were carried out and the advantage of briquetting was demonstrated (Table 3). According to experiments on the effect of exhaust gases on reduction the effect of CO evolved from the briquet should be considered. Thus experiments carried out in the present institute and IMET AN SSSR (Institute of Metallurgy imeni A.A. Baykova) indicated that about 20 % of the total reduction is effected by CO. Considering that reduction occurred in the present experiments in the solid phase to 85 - 90% (10 - 15 % are reduced in liquid phase) and taking into account the results obtained for 1,300° C, the advantage of a reduction in solid phase is evident. Thus statements indicating that the main reduction of iron oxides occurs in the liquid phase are

Card 3/9

APPROVED FOR RELEASE: Tuesday, August 01, 2000 CIA-RDP86-00513R0013442

"APPROVED FOR RELEASE: Tuesday, August 01, 2000 CIA-RDP86-00513R001344

26862
S/080/61/034/004/003/012
A057/A129

Reduction of iron-titanium concentrates ....

erroneous. Results of the experiments on reduction of TiO_2 demonstrate (Figures 5,6, Table 4) that simultaneously with the reduction of iron oxides a considerable reduction of TiO_2 to the oxides Ti_3O_5 and Ti_2O_3 takes place. Contrary to Ref. 3, and 4 the present authors observed that TiO_2 reduction starts already in presence of still considerable amounts of iron oxides. In connection with data given by Zh. L. Vert and M. V. Kamentsev (Ref. 10: ZhNKh, IV, 1, 17, 1959), and V.A. Reznichenko and F. B. Khalimov (Ref. 11: Sb."Titan i yego splavy" (Titanium and alloys), 11 - 15, 1959) the influence of admixtures on the reduction of TiO_2 in artificial mixtures of the type of the investigated concentrates was studied. The results (Table 5) demonstrate that the reduction degree of TiO_2 is lower than in natural iron-titanium concentrates. The present authors assume that in reduction of natural concentrates, by destruction of a complex chemical compound TiO_2 is more active than the free TiO_2 molecule. There are 7 figures, 5 tables and 11 Soviet-bloc references.

ASSOCIATION: Vsesoyuznyy alyuminiyevo-magniyevyy institut (All-Union Scientific Research Institute of Aluminum and Magnesium)

SUBMITTED: July 13, 1960

Card 4/9

APPROVED FOR RELEASE: Tuesday, August 01, 2000 CIA-RDP86-00513R0013442

"APPROVED FOR RELEASE: Tuesday, August 01, 2000 CIA-RDP86-00513R001344

RAPOPORT, M.B.

PHASE I BOOK EXPLOITATION SOV/6278

Ryabinkin, Lev Aleksandrovich, Yuriy Viktorovich Napalkov, Vladimir Vyacheslavovich Znamenskiy, Yuriy Nikolayevich Voskresenskiy, and Miron Borisovich Rapoport.

Teoriya i praktika seysmicheskogo metoda RNP (Theory and Practice of of the Seismic Method of Controlled Directional Reception). Moscow, Gostoptekhizdat, 1962. 293 p. (Series: Moscow. Institut neftekhimicheskoy i gazovoy promyshlennosti. Trudy, vyp. 39). 3000 copies printed.

Sponsoring Agency: Ministerstvo vysshego i srednego spetsial'nogo obrazovaniya RSFSR, and Moskovskiy ordena trudovogo krasnogo znameni Institut neftekhimicheskoy i gazovoy promyshlennosti im. I. M. Gubkina.

Editorial Board: Resp. Ed.: K. F. Zhigach, Professor, I. M. Muravyev, Professor, E. I. Tagiyev, Professor, E. A. Bakirov, Candiate of Geological and Mineral Sciences, M. M. Charygin, Professor, F. F. Dunayev, Professor, I. A. Charnyy, Professor, N. I. Chernozhukov,

Card 1/~~4~~ 2

APPROVED FOR RELEASE: Tuesday, August 01, 2000 CIA-RDP86-00513R0013442

"APPROVED FOR RELEASE: Tuesday, August 01, 2000 CIA-RDP86-00513R001344

Professor, Ye. M. Kuzmak, Professor, V. N. Dakhnov, Professor, G. M. Panchenkov, Professor, N. S. Nametkin, Professor, N. A. Almazov, Docent, A. A. Tikhomirov, Candidate of Economic Sciences, V. I. Biryukov, Candidate of Technical Sciences, V. I. Yegorov, Candidate of Economic Sciences, and V. M. Gurevich; Executive Ed.: Ye. G. Pershina; Tech. Ed.: Z. I. Yakovleva.

PURPOSE: This publication is intended for engineers and geologists concerned with seismic prospecting for oil and gas. It may also serve as a manual for seismic exploration with the method of controlled directional reception.

COVERAGE: The book outlines the method of controlled directional reception of seismic waves (RNP) used in geophysical prospecting. Problems connected with this method are analyzed with special emphasis on the problem of resolving power. There are 126 references: 114 Soviet, 11 English, 1 German.

APPROVED FOR RELEASE: Tuesday, August 01, 2000 CIA-RDP86-00513R0013442

"APPROVED FOR RELEASE: Tuesday, August 01, 2000 CIA-RDP86-00513R001344

RAPOPORT, M.B.; SAMOYLENKO, V.N.; MAL'TSEVA, I.M.

Effect of physicochemical processes taking place in the carbon lining of an electrolytic cell, on the deformation of the cathode casing. Izv. vys. ucheb. zav.; tsvet. met. 5 no.2:81-87 '62. (MIRA 15:3)

1. Vsesoyuznyy nauchno-issledovatel'skiy alyuminiyevo-magniyevyy institut.

(Aluminum--Electrometallurgy)
(Electrolysis--Equipment and supplies)

APPROVED FOR RELEASE: Tuesday, August 01, 2000 CIA-RDP86-00513R0013442

"APPROVED FOR RELEASE: Tuesday, August 01, 2000 CIA-RDP86-00513R001344

RAPOPORT, M.B.; BELETSKIY, M.S.

Investigating the interaction of coal and graphite with aluminum and iron chlorides. Izv.vys.ucheb.zav.; tsvet.met. 5 no.3:71-79 '62. (MIRA 15:11)

1. Vsesoyuznyy alyuminiyevo-magniyevyy institut. Rekomendovana kafedroy legkikh metallov Krasnoyarskogo instituta tsvetnykh metallov.
(Aluminum chloride) (Iron chloride) (Electrodes, Carbon)

APPROVED FOR RELEASE: Tuesday, August 01, 2000 CIA-RDP86-00513R0013442

"APPROVED FOR RELEASE: Tuesday, August 01, 2000 CIA-RDP86-00513R001344

TKACHENKO, V.A.; KOZLOV, V.M.; GUSEVA, N.S.; Prinimali uchastiye: RAPOPORT, M.B.; MIKHAYLOV, N.S.

Making high-titanium slags of iron-titanium concentrates from coastal placers. Titan i ego splavy no.9:86-95 '63. (MIRA 16:9)
(Titanium--Electrometallurgy)

APPROVED FOR RELEASE: Tuesday, August 01, 2000 CIA-RDP86-00513R0013442

"APPROVED FOR RELEASE: Tuesday, August 01, 2000 CIA-RDP86-00513R001344

RAPOPORT, M.B.

Introducing a kinematic correction in the automatic processing of seismograms. Razved. i prom. geofiz. no.50:12-17 '63. (MIRA 18:3)

APPROVED FOR RELEASE: Tuesday, August 01, 2000 CIA-RDP86-00513R0013442

"APPROVED FOR RELEASE: Tuesday, August 01, 2000 CIA-RDP86-00513R001344

GUREVICH, B.L.; IVANOVA, M.[illegible]; PASTUKHOVA, T.B.; RAPOPORT, M.B.

Investigating basements of platforms by the reflection method. Neftegaz.geol. i geofiz. no.2:23-26 '64. (MIRA 17:4)

1. Kiyevskaya ekspeditsiya Ukrainskogo nauchno-issledovatel'skogo geologorazvedochnogo instituta.

APPROVED FOR RELEASE: Tuesday, August 01, 2000 CIA-RDP86-00513R0013442

"APPROVED FOR RELEASE: Tuesday, August 01, 2000 CIA-RDP86-00513R001344

ACC NR: AT6028965 SOURCE CODE: UR/0000/65/000/000/0049/0058

AUTHOR: Benderskiy, V. Ya.; Chervonskiy, M. I.; Rapoport, M. B.

ORG: Ukrainian Scientific Research Institute of Geological Prospecting (Ukrainskiy nauchno-issledovatel'skiy geologo-razvedochnyy institut)

TITLE: Use of directional interference systems in generation and reception of vibrations in the Dnieper-Don basin

SOURCE: Vsesoyuznyy seminar po novoy metodike seysmorazvedki. Seysmorazvedka s primeneniyem gruppirovaniya vzryvov na dlinnykh bazakh i sposoba tsentral'nykh luchey (Seismic prospecting using the grouping of shots on long bases and the method of central rays); trudy seminara. Moscow, Izd-vo Nedra, 1965, 49-58

TOPIC TAGS: seismology, seismic exploration, seismic prospecting, seismic wave, salt dome, seismic record

ABSTRACT: A practical methodology of seismic exploration for investigating the structure of deposits below salt domes in the central Dnieper-Don basin is described. The first stage of seismic exploration consisted of continuous symmetric profiling with controlled grouping during reception, i.e., first correlated modification of controlled directional reception (RNP) and automatic plotting of records. Subsequent use of the directed plane wave-front method (UPF) made it possible

Card 1/2

APPROVED FOR RELEASE: Tuesday, August 01, 2000 CIA-RDP86-00513R0013442

"APPROVED FOR RELEASE: Tuesday, August 01, 2000 CIA-RDP86-00513R001344

ACC NR: AT6028965

to detect reflected waves previously not recorded. Greatest efficiency was achieved by combining UPF and controlled grouping of apparatus for automatic plotting of seismic records. A cross section was constructed from the field data using this method, which shows several boundaries within and below the salt domes. Orig. art. has: 5 figures and 2 formulas.

SUB CODE: 08/ SUBM DATE: 30Apr65/ ORIG REF: 005

APPROVED FOR RELEASE: Tuesday, August 01, 2000 CIA-RDP86-00513R0013442

"APPROVED FOR RELEASE: Tuesday, August 01, 2000 CIA-RDP86-00513R001344

BENDERSKIY, V.Ya.; GUREVICH, B.L.; RAPOPORT, M.B.; RAYKHER, L.P.; CHERVONSKIY, M.I.

Using seismic prospecting in the study of subsalt deposits in the Dnieper-Donets Lowland. Izv.vys.ucheb.zav.; geol. i razv. 8 no.1: 109-117 Ja '65. (MIRA 18:3)

1. Ukrainskiy nauchno-issledovatel'skiy geologorazvedochnyy institut.

APPROVED FOR RELEASE: Tuesday, August 01, 2000 CIA-RDP86-00513R0013442

"APPROVED FOR RELEASE: Tuesday, August 01, 2000 CIA-RDP86-00513R001344

L 00584-66 EWT(1)/EWA(h) GW

ACCESSION NR: AP5021604

UR/0286/65/000/013/0074/0074

AUTHORS: Rapoport, M. B.; Chervonskiy, M. I.; Raykher, L. D.
44,55 44,55 44,55

TITLE: Method of producing seismic controllable guided systems by storage on a photolayer of variable density traces. Class 42, No. 172508

SOURCE: Byulleten' izobreteniy i tovarnykh znakov, no. 13, 1965, 74

31
B

TOPIC TAGS: seismography, seismic wave
44,55,12

ABSTRACT: This Author Certificate presents a method for producing seismic controllable guided systems by storage on a photolayer of variable density traces with the reproduction of magnetic seismograms. To separate the useful waves and to suppress the ordinary noise, time shifts compensating the time shifts of the separated waves are introduced into the stored signals. Control by the guided systems is accomplished by the rotation of the recording line by an angle equal to the inclination angle of the co-phase axes of the separated waves.

ASSOCIATION: Ukrainskiy nauchno-issledovatel'skiy geologo-razvedochnyy institut (Ukrainian Geological Exploration Scientific Research Institute)
44,55

Card 1/2

APPROVED FOR RELEASE: Tuesday, August 01, 2000 CIA-RDP86-00513R0013442

"APPROVED FOR RELEASE: Tuesday, August 01, 2000 CIA-RDP86-00513R001344

L 00584-66

ACCESSION NR: AP5021604

SUBMITTED: 28Mar64 ENCL: 00 SUB CODE: ES

NO REF SOV: 000 OTHER: 000

Card 2/2

APPROVED FOR RELEASE: Tuesday, August 01, 2000 CIA-RDP86-00513R0013442

"APPROVED FOR RELEASE: Tuesday, August 01, 2000 CIA-RDP86-00513R001344

L 21793-66 EWT(1)/EWA(h) GW

ACC NR: AP6002919 (N) SOURCE CODE: UR/0286/65/000/024/0082/0082

AUTHORS: Raykher, L. D.; Benderskiy, V. Ya.; Vasil'yev, Yu. A.; Rapoport, M. B.; Kharaz, I. I.; Chervonskiy, M. I. 14 B

ORG: none

TITLE: A method for seismic exploration. Class 42, No. 177103 [announced by Ukrainian Scientific Research Geological Exploration Institute (Ukrainskiy nauchno-issledovatel'skiy geologorazvedochnyy institut)]

SOURCE: Byulleten' izobreteniy i tovarnykh znakov, no. 24, 1965, 82

TOPIC TAGS: seismograph, seismology

ABSTRACT: This Author Certificate presents a method for seismic exploration with the use of controlled directional excitation systems (operating along any specified principle) and systems of vibration reception. The method increases the effectiveness of exploration and provides a unique selection of seismic waves from the irradiated objects. The interference systems in the vibration reception are coordinated with interference systems of the vibration excitation. This is accomplished by summing up displacements of any number of recordings based on a previously specified relationship which agrees with the vibration excitation principle.

SUB CODE: 08/ SUBM DATE: 20Jul64

Card 1/1 UDC: 550.834

APPROVED FOR RELEASE: Tuesday, August 01, 2000 CIA-RDP86-00513R0013442

"APPROVED FOR RELEASE: Tuesday, August 01, 2000 CIA-RDP86-00513R001344

ACC NR: AT6028965 SOURCE CODE: UR/0000/65/000/000/0049/0058

AUTHOR: Benderskiy, V. Ya.; Chervonskiy, M. I.; Rapoport, M. B.

ORG: none

TITLE: New tectonic maps of the Crimea and the relationship between the folded structures of the Crimean Mountains and the northwestern Caucasus

SOURCE: Vsesoyuznyy seminar po novoy metodike seysmorazvedki. Seysmorazvedka s primeneniyem gruppirovaniya vzryvov na dlinnykh bazakh i sposoba tsentral'nykh luchey (Seismic prospecting using the grouping of shots of long bases and the method of centrla rays); trudy seminara. Moscow, Izd-vo Nedra, 1965, 49-58

TOPIC TAGS: tectonic map, upper crust, seismicity, Crimea, earthquake epicenter, TECTONICS, MAP

ABSTRACT: A new tectonic map of the Crimea, showing major structures faults, earthquake epicenter distribution, and other geologic features is presented. The importance of various fault systems in the present-day folded and block structures of the Crimean Mountains is explained. The structural simularities between the Crimean Mountains and the southern flank of the Greater Caucasus meganticlinorium are noted. Present-day seismicity of the Black Sea floor in the sector adjacent to the southwest block uplift of the Crimean Mountains is associated with prehistoric geologic development. Orig. art. has: 2 figures.

SUB CODE: 08/ SUBM DATE: 30Apr65/ ORIG REF: 005/

Card 1/1

APPROVED FOR RELEASE: Tuesday, August 01, 2000 CIA-RDP86-00513R0013442

"APPROVED FOR RELEASE: Tuesday, August 01, 2000 CIA-RDP86-00513R001344

[illegible] SOURCE CODE: UR/0413/66/000/015/0095/0095

INVENTORS: Ryabinkin, L. A.; Rapoport, M. B.; Veksler, B. Ye.; Malinskiy, S. A.

ORG: none

TITLE: Device for summing seismic signals. Class 42, No. 184468

SOURCE: Izobret prom obraz tov zn, no. 15, 1966, 95

TOPIC TAGS: seismologic instrument, magnetic recording

ABSTRACT: This Author Certificate presents a device for summing seismic signals, containing a magnetic drum with reproducing heads, signal amplifiers, step probes, a summing delay line, a summed signal amplifier, a chart recorder, a chart drum, and a time relay. To speed the processing and analysis of material with production of grouped tapes, the coil of the step probe switching the magnitude of the summation time shift is connected through a pulse frequency divider to the coil of the step probe switching the summation base center (see Fig. 1). To obtain summed tapes with the summation base length increased in time, the extremes of the summed channels are connected to the delay line by relay contacts controlled by the time relay.

Card 1/2 UDC: 550.340.19

APPROVED FOR RELEASE: Tuesday, August 01, 2000 CIA-RDP86-00513R0013442

"APPROVED FOR RELEASE: Tuesday, August 01, 2000 CIA-RDP86-00513R001344

L 10052-67

ACC NR: AP6029934

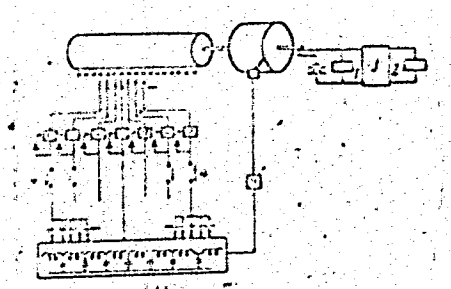

Fig. 1. 1 and 2 - coils of step probes; 3 - frequency divider; 4 - relay contacts

Orig. art. has: 1 diagram.

SUB CODE: 08/ SUBM DATE: 29Jul65

Card 2/2

APPROVED FOR RELEASE: Tuesday, August 01, 2000 CIA-RDP86-00513R0013442

"APPROVED FOR RELEASE: Tuesday, August 01, 2000 CIA-RDP86-00513R001344

L 10795-67 EWT(1) GW SOURCE CODE: UR/0413/66/000/012/0090/0090
ACC NR: AP7003511 23

INVENTOR: Raykher, L. D.; Rapoport, M. B.; Cherkasskiy, N. V.; Chervonskiy, M. I.; Yuzevich, Yu. V.

ORG: none

TITLE: Method for constructing temporal seismic cross sections. Class 42, no. 182901 [Announced by Ukraine Scientific Research Geological Prospecting Institute]

SOURCE: Izobreteniya, promyshlennyye obraztsy, tovarnyye znaki, no. 12, 1966, 90

TOPIC TAGS: seismic wave, geophysics

ABSTRACT: Author's certificate no. 182901, dated 10 April 1965, has been issued to L. D. Raykher, M. B. Rapoport, N. V. Cherkasskiy, M. I. Chervonskiy and Yu. V. Yuzevich of the Ukrainian Scientific Geological Prospecting Institute for a method described as follows: "A method for constructing temporal seismic cross sections, using a single-track multichannel magnetic record. It differs in that for the purpose of increasing the quality of the reproduced material and speeding up the processing rate the rotating drum is exposed along its generatrix to seismic signals which are displayed on the screen of a cathode-ray tube; scanning begins in response to appearance of the time mark of a shot; transition from trace to trace is accomplished by rotation of the photo drum. [JPRS: 37,397]

SUB CODE: 08 / SUBM DATE: 10Apr65

UDC: 550.834

Card 1/1

APPROVED FOR RELEASE: Tuesday, August 01, 2000 CIA-RDP86-00513R0013442

"APPROVED FOR RELEASE: Tuesday, August 01, 2000 CIA-RDP86-00513R001344

ACC NR: AP6021459 SOURCE CODE: UR/0413/66/000/011/0080/0080

INVENTOR: Ryabinkin, L. A.; Raykher, L. D.; Rapoport, M. B.; Benderskiy, V. Ya.; Chervonskiy, M. I.

ORG: None

TITLE: A method for adding seismic signals. Class 42, No. 182352

SOURCE: Izobreteniya, promyshlennyye obraztsy, tovarnyye znaki, no. 11, 1966, 80

TOPIC TAGS: seismology, light modulation, nonelectric signal equipment, signal processing

ABSTRACT: This Author's Certificate introduces a method for adding seismic signals by synchronous storage on a light sensitive layer exposed by a long writing line with successive brightness modulation by signals which are reproduced channel by channel. The procedure is designed for addition of reflected signals with hyperbolic cophase axes. During reproduction of each channel, the writing line is rotated through an angle which is determined by the time of arrival of the waves, their rate of propagation and the distance from the point of the explosion to the point of reception.

SUB CODE: 09 08/ SUBM DATE: 17Apr65

Card 1/1 UDC: 550.340.19

APPROVED FOR RELEASE: Tuesday, August 01, 2000 CIA-RDP86-00513R0013442

"APPROVED FOR RELEASE: Tuesday, August 01, 2000 CIA-RDP86-00513R001344

ACC NR: AP6021456 SOURCE CODE: UR/0413/66/000/011/0079/0079

INVENTOR: Rapoport, M. B.; Seliverstov, B. P.; Chervonskiy, M. I.; Gurevich, B. L.; Malinskiy, S. A.; Veksler, B. Ye.; Aysman, Yu. A.; Remennikov, V. S.; Zhavoronkov, G. A.

ORG: None

TITLE: A device for automatically analyzing seismograms and constructing seismic profiles. Class 42, No. 182349

SOURCE: Izobreteniya, promyshlennyye obraztsy, tovarnyye znaki, no. 11, 1966, 79

TOPIC TAGS: seismography, cathode ray tube, seismic modeling

ABSTRACT: This Author's Certificate introduces: 1. A device for automatically analyzing seismograms and constructing seismic profiles. The unit is based on Author's Certificate No. 166503. Efficiency of analysis is improved by mounting a cathode ray tube on a carriage which is moved along a photodrum by a worm gear or ratchet turned by the shaft of the photodrum. 2. A modification of this device in which measurement quality is improved by connecting a sawtooth generator through a programmed amplitude regulator to the vertical deflection system of the cathode ray tube.

UDC: 550.340.84

Card 1/2

APPROVED FOR RELEASE: Tuesday, August 01, 2000 CIA-RDP86-00513R0013442

"APPROVED FOR RELEASE: Tuesday, August 01, 2000 CIA-RDP86-00513R001344

ACC NR: AP6021456

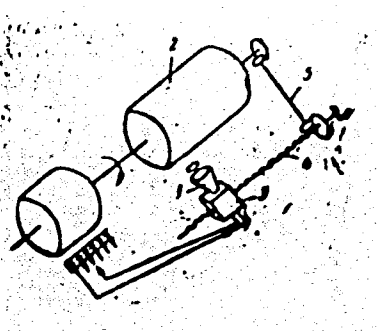

1—cathode ray tube; 2—photodrum; 3—carriage; 4—worm shaft; 5—drive

SUB CODE: 08, 09/ SUBM DATE: 31Mar64

Card 2/2

APPROVED FOR RELEASE: Tuesday, August 01, 2000 CIA-RDP86-00513R0013442

"APPROVED FOR RELEASE: Tuesday, August 01, 2000 CIA-RDP86-00513R001344

ACC NR: AT6032730 SOURCE CODE: UR/0000/66/000/000/0058/0062

AUTHOR: Ryabinkin, L. A.; Voskresenskiy, Yu. N.; Rapoport, M. B.

ORG: none

TITLE: Modeling of reflection and refraction from rough boundaries performed in order to develop the method of RNP

SOURCE: AN SSSR. Institut fiziki Zemli. Geoakustika; ispol'zovaniye zvuka i ultrazvuka v seysmologii, seysmorazvedke i gornom dele (Geoacoustics; the use of sound and ultrasound in seismology, seismic prospecting, and mining). Moscow, Izd-vo Nauka, 1966, 58-62

TOPIC TAGS: seismic modeling, seismic prospecting, seismic wave, acoustic reflection, acoustic refraction

ABSTRACT: A short description is given of seismic modeling experiments and data-processing methods. Most of the research was conducted using two-dimensional models with various differently shaped boundaries (sinosoidal, semicircular, triangular, etc), i.e. with geometrically rough boundaries. Waves analogous to diffraction spectra of the highest order were registered, together with waves reflected from the middle plane of the boundaries (mirror type reflection). The properties of these waves and their usefulness in seismic prospecting are described. Investigations of reflection from physically rough boundaries with periodically variable coefficients of reflection have been initiated . The modeling of waves refracted from rough boundaries of liquid-

Card 1/2

APPROVED FOR RELEASE: Tuesday, August 01, 2000 CIA-RDP86-00513R0013442

"APPROVED FOR RELEASE: Tuesday, August 01, 2000 CIA-RDP86-00513R001344

ACC NR: AT5032730

solid models is briefly reviewed. Orig. art. has: 2 figures.

SUB CODE: 08/ SUBM DATE: 28Mar66/ ORIG REF: 004

Card 2/2

APPROVED FOR RELEASE: Tuesday, August 01, 2000 CIA-RDP86-00513R0013442

"APPROVED FOR RELEASE: Tuesday, August 01, 2000 CIA-RDP86-00513R001344

ACC NR: AT6032731 SOURCE CODE: UR/0000/66/000/000/0064/0068

AUTHOR: Voskresenskiy, Yu. N.; Rapoport, M. B.

ORG: none

TITLE: Role of frequency filtration in seismic modeling

SOURCE: AN SSSR. Institut fiziki Zemli. Geoakustika; ispol'zovaniye zvuka i ul'tra-zvuka v seysmologii, seysmorazvedke i gornom dele (Geoacoustics; the use of sound and ultrasound in seismology, seismic prospecting, and mining). Moscow, Izd-vo Nauka, 1966, 64-68

TOPIC TAGS: seismic modeling, ~~[illegible]~~, frequency filtration, seismoscope, piezoelectric crystal, electric filter, high frequency

ABSTRACT: During ultrasonic seismic modeling, the presence in the piezocrystals of several modes of oscillations including parasitic oscillations have been observed to affect the pulse shape. The several methods of forming and damping the natural oscillations of piezocrystals now in use involve the introduction of frequency filters into one or another section of the electroacoustic track of the model. Therefore, they may all be replaced by the action of universal electric filters connected in front of the source or behind the receiver. In this way the similarity between the wave picture in the model and that in nature is preserved. It is recommended that, in modeling with weakly absorbing materials, the use of higher frequencies with sharp frequency cutoff be considered. Universal electric filters, being a simple means of controlling pulse shape, will broaden modeling

Card 1/2

APPROVED FOR RELEASE: Tuesday, August 01, 2000 CIA-RDP86-00513R0013442

"APPROVED FOR RELEASE: Tuesday, August 01, 2000 CIA-RDP86-00513R001344

ACC NR: AP7002580 (A,N) SOURCE CODE: UR/0413/66/000/023/0077/0077

INVENTORS: Anisimova, L. I.; Bernshteyn, G. L.; Gutskin, V. M.; Potov, P. A.; Karapetov, K. K.; Kovalev, G. N.; Rapoport, M. B.; Spasibukhov, O. I.

ORG: none

TITLE: Device for converting seismograms into variable height recordings. Class 42, No. 189165

SOURCE: Izobreteniya, promyshlennyye obraztsy, tovarnyye znaki, no. 23, 1966, 77

TOPIC TAGS: seismograph, seismologic instrument

ABSTRACT: This Author Certificate presents a device for converting seismograms into variable height recordings, which contains a pantograph, an illuminator, and a photodrum. To increase the rate of processing seismograms, a drive pin coupled with a movable screen is mounted in the pencil socket of the pantograph (see Fig. 1). The illuminator and a rod which is the axle of rotation of the movable screen are mounted on a plate which can be moved along the generatrix of the photodrum.

Card 1/2 UDC: 550.340.8

APPROVED FOR RELEASE: Tuesday, August 01, 2000 CIA-RDP86-00513R0013442

"APPROVED FOR RELEASE: Tuesday, August 01, 2000 CIA-RDP86-00513R001344

ACC NR: AP7002580

Fig. 1. 1 - drive pin; 2 - movable screen; 3 - plate; 4 - photodrum; 5 - illuminator; 6 - rod

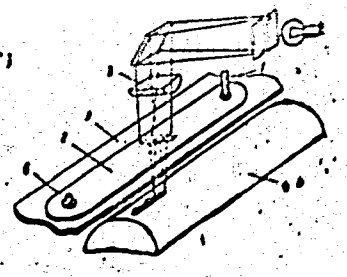

Orig. art. has: 1 diagram.

SUB CODE: 08/ SUBM DATE: 10Mar65

Card 2/2

APPROVED FOR RELEASE: Tuesday, August 01, 2000 CIA-RDP86-00513R0013442

"APPROVED FOR RELEASE: Tuesday, August 01, 2000 CIA-RDP86-00513R001344

L 33650-65

ACCESSION NR: AP5007480 S/0286/65/000/004/0089/0089

16
B

AUTHOR: Rapoport, M. B.

TITLE: An apparatus for generating functions of kinematic correction. Class 42, No. 168540

SOURCE: Byulleten' izobreteniy i tovarnykh znakov, no. 4, 1965, 89

TOPIC TAGS: transistorized circuit, control system, transistor, stabilization error control

ABSTRACT: This Author Certificate presents an apparatus for generating functions of kinematic correction. The apparatus contains resistance-capacitance units and a transistor. To assure the inertialess operation of the apparatus, the resistance-capacitance units (connected to the source of power through potentiometers) are installed in the emmitting circuit of the common-base transistor (see Fig. 1 on the Enclosure). Orig. art. has: 1 figure.

ASSOCIATION: none

SUBMITTED: 29Apr63 ENCL: 01 SUB CODE: EC

NO REF SOV: 000 OTHER: 000

Card 1/2

APPROVED FOR RELEASE: Tuesday, August 01, 2000 CIA-RDP86-00513R0013442

"APPROVED FOR RELEASE: Tuesday, August 01, 2000 CIA-RDP86-00513R001344

L 33650-65

ACCESSION NR: AP5007480

ENCLOSURE: 01

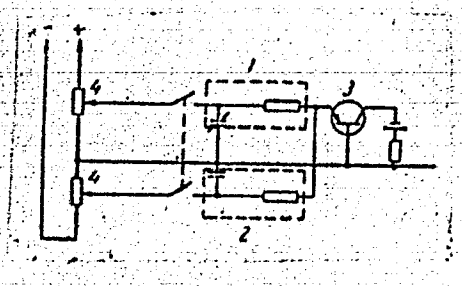

Fig. 1. 1 and 2- resistance-capacitance units; 3- transistor; 4- potentiometers

Card 2/2

APPROVED FOR RELEASE: Tuesday, August 01, 2000 CIA-RDP86-00513R0013442

"APPROVED FOR RELEASE: Tuesday, August 01, 2000 CIA-RDP86-00513R001344

L 56674-65 EWT(1)/EWA(h) Peb GW

ACCESSION NR: AP5017853

UR/0286/65/000/011/0086/0086
550.834
550.340.827

14
B

AUTHOR: Rapoport, M. B.; Ryabinkin, L. A.

TITLE: A method for making seismograms by controlled directional reception of seismic waves. Class 42, No. 171602

SOURCE: Byulleten' izobreteniy i tovarnykh znakov, no. 11, 1965, 86

TOPIC TAGS: seismography, electronic measurement

ABSTRACT: This Author's Certificate introduces: 1. A method of making seismograms by controlled directional reception of seismic waves. The process is accelerated and the equipment is simplified by feeding the signals of the individual traces of the seismogram which are being reproduced through channels to a number of recorders where these signals are inscribed on a material which can be stored. The inclination of the recorder line to the recording direction varies with the change in the number of the channel being integrated, so that the signals are stored in various locations on the tape with various displacements. 2. A modification of this method

Card 1/2

APPROVED FOR RELEASE: Tuesday, August 01, 2000 CIA-RDP86-00513R0013442

"APPROVED FOR RELEASE: Tuesday, August 01, 2000 CIA-RDP86-00513R001344

L 56674-65

ACCESSION NR: AP5017853

in which provision is made for obtaining continuous values of the time shifts between the signals being stored, and for improving the accuracy of the wave shift reading. A recorder is used for projecting a luminous band onto a rotating photosensitive drum. The inclination of this band is determined by the number of the channel being integrated, while the brightness of the illumination is modulated by the signals. 3. A modification of this method in which the storage tape is made visible. The storage is done on a phosphor with lagging persistence on the screen of a cathode ray tube. The electron beam forms a narrow luminescent band on the screen of the tube in synchronization with the readout of all the seismogram channels. This band changes its inclination at a high frequency in synchronization with the high frequency switching of the channels being integrated.

ASSOCIATION: none

SUBMITTED: 21Apr64 ENCL: 00 SUB CODE: ES, EC

NO REF SOV: 000 OTHER: 000

Card 2/2

APPROVED FOR RELEASE: Tuesday, August 01, 2000 CIA-RDP86-00513R0013442

"APPROVED FOR RELEASE: Tuesday, August 01, 2000 CIA-RDP86-00513R001344

RAPOPORT, M. B.

Cand Tech Sci - (diss) "Modeling of waves effects related to the non-mirrorlike reflections of boundaries applicable to the RNP seismic method." Moscow, 1961. 15 pp; (Academy of Sciences USSR, Inst of Earth Physics imeni O. Yu. Shmidt); 150 copies; price not given; (KL, 6-61 sup, 224)

APPROVED FOR RELEASE: Tuesday, August 01, 2000 CIA-RDP86-00513R0013442

"APPROVED FOR RELEASE: Tuesday, August 01, 2000 CIA-RDP86-00513R001344

1ST AND 2ND ORDERS

PROCESSES AND PROPERTIES INDEX

Ca

1

The determination of carbon dioxide in the air. M. E. Rapoport. *Lab. Prakt.* (U. S. S. R.) 1939, Sammelband 81-3; *Chem. Zentr.* 1940, I, 2204; cf. *C. A.* 35, 6800[6].—The collection of the gas in rubber balloons, automatic temp. indicator and removal of any $BaSO_4$ from the absorption vessel are described. M. G. Moore

ASM-SLA METALLURGICAL LITERATURE CLASSIFICATION

APPROVED FOR RELEASE: Tuesday, August 01, 2000 CIA-RDP86-00513R0013442

"APPROVED FOR RELEASE: Tuesday, August 01, 2000 CIA-RDP86-00513R001344

PROCESSES AND PROPERTIES INDEX

Ca

7

Determination of carbon dioxide in air. M. R. Rapoport. *Lab. Prakt.* (U. S. S. R.) 10, No. 4, 23-4(1941).—The amt. of CO_2 in various layers of air in the chamber used for the analysis is not identical. This is due not only to the different densities of the air, but also to the difference in the densities of CO_2 and air, to diffusion, convection and other phys. processes taking place in the chamber with air under investigation. For obtaining more accurate results in the detn. of CO_2 it is necessary to analyze all the air of the chamber and to take the mean of these values. If all air of the chamber cannot be analyzed (as is the case in using microapp., dynamic app., or in taking air samples in Douglas bags) it is necessary to make analyses of 3 small samples of air taken from the upper, medium and lower layers of the chamber and use their mean value.

W. R. Henn

ASM-SLA METALLURGICAL LITERATURE CLASSIFICATION

APPROVED FOR RELEASE: Tuesday, August 01, 2000 CIA-RDP86-00513R0013442

"APPROVED FOR RELEASE: Tuesday, August 01, 2000 CIA-RDP86-00513R001344

PROCESSES AND PROPERTIES INDEX

CA

7

Determination of nitrogen oxides in the air. M. F. Rapoport. *Lab. Prakt.* (U. S. S. R.) 10, No. 6, 24-6 (1941). R. modified slightly the method of Gurevich (*Dam. of harmful substances in the air of industrial plants*, 3rd ed., 1937) for det'g. N oxides in the air. Up to 0.002 mg. of NO_2 per l. of air can be det'd. accurately by the method proposed. W. R. Henn

METALLURGICAL LITERATURE CLASSIFICATION

APPROVED FOR RELEASE: Tuesday, August 01, 2000 CIA-RDP86-00513R0013442

"APPROVED FOR RELEASE: Tuesday, August 01, 2000 CIA-RDP86-00513R001344

ALEKSEYEV, Sergey Vladimirovich; BAUMSHTEYN, I.A., inzh.; LIBERMAN, A.Ya.; MALOV, V.S.; RAPOPORT, M.I.; FEDOTOV, I.M.; KHOMYAKOV, M.V., inzh.; TSAREV, M.I.; FRIDKIN, L.M., tekhn. red.

[Handbook on high-voltage power distribution networks]Spravochnik po elektricheskim setiam vysokogo napriazheniia. [By] S.V. Alekseev i dr. Izd.4., perer. i dop. Pod obshchei red. M.V. Khomiakova i I.A.Baumshteina. Moskva, Gosenergoizdat, 1962. 559 p. (MIRA 15:12)

(Electric power distribution--Handbooks, manuals, etc.)
(Electric lines--Overhead)

APPROVED FOR RELEASE: Tuesday, August 01, 2000 CIA-RDP86-00513R0013442

"APPROVED FOR RELEASE: Tuesday, August 01, 2000 CIA-RDP86-00513R001344

KAZANSKIY, V.B., dots.; RAPOPORT, M.I., inzh.

Twenty-fifth anniversary of the creation of the Office of Power Plant Organization and Efficiency. Elektrichestvo no. 5:88-89 My '58. (MIRA 11:7)

(Electric power plants)

APPROVED FOR RELEASE: Tuesday, August 01, 2000 CIA-RDP86-00513R0013442

"APPROVED FOR RELEASE: Tuesday, August 01, 2000 CIA-RDP86-00513R001344

RAPOPORT, M.I.

AUTHORS: Kazanskiy, V.B., Docent, Rapoport, M.I., Engineer 105-58-5-22/29

TITLE: The 25th Anniversary of the Founding of ORGRES (K 25-letiyu so dnya osnovaniya ORGRES)

PERIODICAL: Elektrichestvo, 1958, Nr 5, pp. 88-89 (USSR)

ABSTRACT: In May 1958 it will be 25 years since the State Trust for the organization and rationalization of regional electric power plants and networks (ORGRES) of the Ministry for Electric Power Plants has been founded. The basic task to be performed by ORGRES is to render technical aid to plants in putting into operation and introducing new equipments for power engineering in order to increase the safety and economy of these plants. ORGRES has great experience in this field and worked out numerous schemes and constructions. The measures recommended are published by ORGRES as well as by the Ministry for Electric Power Stations. In the course of 25 years more than 200 electric power stations were able to start operating with the aid of ORGRES. The most important achievement during recent years was starting operation of the Kuybyshev hydraulic power station. ORGRES developed a number of measuring devices, published instructions for electrical equipment, and carried out work in connection

Card 1/2

APPROVED FOR RELEASE: Tuesday, August 01, 2000 CIA-RDP86-00513R0013442

"APPROVED FOR RELEASE: Tuesday, August 01, 2000 CIA-RDP86-00513R001344

The 25th Anniversary of the Founding of ORGRES 105-58-5-22/28

with safety measures to be undertaken in connection with the automation of systems. Also a number of recommendations for the reduction of losses in networks, securing the necessary voltage, and for the economical distribution of active- and reactive loads were elaborated by ORGRES. Such problems as the reduction of staffs in substations and changing over to operation without the necessity of a permanent control of the steering panel are solved. On the Khot'kov test stand the staff is trained for building- and assembly work in connection with the 400 kV long-distance lines. The work carried out by ORGRES is coordinated with that performed by the Institutes (VEI, ENIN, NIIPT, VNIIE). ORGRES developed telemeters, for which achievement V.I.Ivankin, V.Ye.Kazanskiy, G.P.Minin and N.P.Lapshov were awarded the Stalin Prize. Among the new telemeters the type T40-53 deserves to be mentioned, which was developed on the basis of T40-3. At present an apparatus for automatic frequency- and power control developed according to the ORGRES method is being tested in the Ural power engineering systems and in the electric power stations of the Belorusenergo.

AVAILABLE: Library of Congress

Card 2/2 1. Electric power production--Organization--USSR 2. Power plants--Development 3. Electrical networks--Development

APPROVED FOR RELEASE: Tuesday, August 01, 2000 CIA-RDP86-00513R0013442

"APPROVED FOR RELEASE: Tuesday, August 01, 2000 CIA-RDP86-00513R001344

RAPOPORT, M. I. PA 23T15

USSR/Electricity
Insulation, Electric
Insulators

Apr 1947

"New Methods of Safeguarding High-voltage Insulators," M. I. Rapoport, Orgres, 4½ pp

"Promyshlennaya Energetika" Vol IV, No 4

Discusses methods of measuring the dielectric angle of loss of insulators. Mentions the capacity method of estimating damping which is accomplished by means of a resistance megohmmeter and the absorption method of measuring.

23T15

APPROVED FOR RELEASE: Tuesday, August 01, 2000 CIA-RDP86-00513R0013442

"APPROVED FOR RELEASE: Tuesday, August 01, 2000 CIA-RDP86-00513R001344

33

A New Method for Inspecting High Voltage Insulators. (In Russian.) M. I. Rapoport. *Industrial Power* (U.S.S.R.), no. 4, 1947, p. 1-5.

Describes a method using a "defectoscope" consisting of a radio receiver with a loop antenna, and a meter at the outlet

ASM-SLA METALLURGICAL LITERATURE CLASSIFICATION

APPROVED FOR RELEASE: Tuesday, August 01, 2000 CIA-RDP86-00513R0013442

"APPROVED FOR RELEASE: Tuesday, August 01, 2000 CIA-RDP86-00513R001344

SVI, P.M., inzh.; RAPOPORT, M.I., inzh., red.; SAVEL'YEV, V.I., red.; VORONIN, K.P., tekhn.red.

[Testing insulation by increased a.c.voltage] Ispytanie izoliatsii povyshennym napriazheniem peremennogo toka. Moskva, Gos.energ.izd-vo, 1958. 31 p. (MIRA 12:8)

1. ORGRES, trust, Moscow.
(Electric insulators and insulation)

APPROVED FOR RELEASE: Tuesday, August 01, 2000 CIA-RDP86-00513R0013442

"APPROVED FOR RELEASE: Tuesday, August 01, 2000 CIA-RDP86-00513R001344

ZOLOTAREVA, M.M., prof.; RAPOPORT, M.Kh., kand.meditsinskikh nauk; BIRCHENKO, L.A., vrach

Prevention of blindness and the organization of dispensary treatment of glaucoma patients. Zdrav. Belor. 4 no.2:48-51 F '58. (MIRA 13:8)

1. Iz glaznoy kliniki Belorusskogo instituta usovershenstvovaniya vrachey (direktor - professor M.N. Zhukova).
(BLINDNESS--PREVENTION) (GLAUCOMA)

APPROVED FOR RELEASE: Tuesday, August 01, 2000 CIA-RDP86-00513R0013442

"APPROVED FOR RELEASE: Tuesday, August 01, 2000 CIA-RDP86-00513R001344

VOLKOV, S.I.; RAPOPORT, M.M.; RAKITINA, Ye.D., red.

[Calculating technique and machine accounting] Tekhnika vychislenii i mekhanizatsiia ucheta. Moskva, Izd-vo "Kolos," 1964. 319 p. (MIRA 17:6)

APPROVED FOR RELEASE: Tuesday, August 01, 2000 CIA-RDP86-00513R0013442

"APPROVED FOR RELEASE: Tuesday, August 01, 2000 CIA-RDP86-00513R001344

RAPOPORT, M.M., inzh.

In the world of cybernetics. Politekh. obuch. no.7:75-80 Jl '59. (MIRA 12:9)

(Cybernetics)

APPROVED FOR RELEASE: Tuesday, August 01, 2000 CIA-RDP86-00513R0013442

"APPROVED FOR RELEASE: Tuesday, August 01, 2000 CIA-RDP86-00513R001344

RAPOPORT, Mikhail Moiseyevich; GRAKHOVSKAYA, T.M., red.

[Mechanized accounting for the operation of automotive freight transportation] Mekhanizatsiia ucheta raboty gruzovogo avtomobil'nogo transporta. Izd.2., perer. i dop. Moskva, Transport, 1964. 93 p. (MIRA 17:5)

APPROVED FOR RELEASE: Tuesday, August 01, 2000 CIA-RDP86-00513R0013442

"APPROVED FOR RELEASE: Tuesday, August 01, 2000 CIA-RDP86-00513R001344

RAPOPORT, Mikhail Moiseyevich, inzh.; BOLYNSKIY, V.V., inzh., nauchn. red.; RYCHEK, T.I., red.; SUSHKEVICH, V.I., tekhn. red.

[Calculating machines] Schetnye mashiny. Moskva, Trudrezervizdat, 1959. 148 p. (MIRA 16:10)
(Calculating machines)

APPROVED FOR RELEASE: Tuesday, August 01, 2000 CIA-RDP86-00513R0013442

"APPROVED FOR RELEASE: Tuesday, August 01, 2000 CIA-RDP86-00513R001344

RAPOPORT, Mikhail Moiseyevich; ISAKOV, V.I., prof., nauchnyy red.; MORSKOY, K.L., red. izd-va; ABRAMOVA, V.M., tekhn. red.

[Machine accounting in construction] Mekhanizatsiia ucheta v stroitel'stve. Moskva, Gos. izd-vo lit-ry po stroit., arkhit. i stroit. materialam, 1961. 115 p. (MIRA 14:10)
(Construction industry—Accounting) (Machine accounting)

APPROVED FOR RELEASE: Tuesday, August 01, 2000 CIA-RDP86-00513R0013442

"APPROVED FOR RELEASE: Tuesday, August 01, 2000 CIA-RDP86-00513R001344

RAPOPORT, Mikhail Moiseyevich

Schetnyye Mashiny. Moskva, Trudrezervizdat, 1959.
148 p. (2) p. illus, diagrs., tables. (Biblioteka Molodogo Rabochego)
Bibliography: p. (150)

APPROVED FOR RELEASE: Tuesday, August 01, 2000 CIA-RDP86-00513R0013442

"APPROVED FOR RELEASE: Tuesday, August 01, 2000 CIA-RDP86-00513R001344

RAPOPORT, Mikhail Moiseyevich; NOVIKOVA, S.N., red.

[Machine accounting in agriculture] Mekhanizatsiia ucheta v sel'skom khoziaistve. 2., perer. izd. Moskva, Statistika, 1965. 97 p. (MIRA 18:4)

APPROVED FOR RELEASE: Tuesday, August 01, 2000 CIA-RDP86-00513R0013442

"APPROVED FOR RELEASE: Tuesday, August 01, 2000 CIA-RDP86-00513R001344

1ST AND 2ND ORDERS

PROCESSES AND PROPERTIES INDEX

Thermocouple. M. Ya. Rapoport. Russ. 43,447, June 30, 1985. A thermocouple is prepd. by pptg. a thin layer of one metal on a wire made from another metal, e. g., Bi and Cd may be pptd. on Ag wire.

ASM-SLA METALLURGICAL LITERATURE CLASSIFICATION

APPROVED FOR RELEASE: Tuesday, August 01, 2000 CIA-RDP86-00513R0013442

"APPROVED FOR RELEASE: Tuesday, August 01, 2000 CIA-RDP86-00513R001344

RAPOPORT, M. Ya.

RAPOPORT, M. Ya. -- "Investigation of Gas Formation in the Cinders of a Slanting Coal Bed." Sub 11 Jul 52, Inst of Mining, Acad Sci USSR (Dissertation for the Degree of Candidate in Technical Sciences)

SO: Vecherniaya Moskva, January-December 1952

APPROVED FOR RELEASE: Tuesday, August 01, 2000 CIA-RDP86-00513R0013442

"APPROVED FOR RELEASE: Tuesday, August 01, 2000 CIA-RDP86-00513R001344

USSR/Mining

FD-1462

Card 1/1 : Pub. 41-16/17

Author : Zaytsev. N. A. and Rapoport, M. Ya., Moscow

Title : Variation in gas liberation from a coal edge-seam subjected to sudden expulsions of coal and gas during stope advancement

Periodical : Izv. AN SSSR. Otd. tekh. nauk 7, 151-155

Abstract : Investigates variation in gas liberation from a coal seam ahead of the longwall by observations of variation in rate of liberation, according to distance from mouth of hole to stope, of methane from holes bored in the seam. The experiments were conducted in the central region of the Donbas by the Institutes of Mining of the Academy of Sciences of the USSR and of the UkSSR under the direction of A. A. Skochinskiy. Diagram; graph; tables. Two references.

Institution :

Submitted : July 3, 1954

RAPOPORT, M.Ya.

APPROVED FOR RELEASE: Tuesday, August 01, 2000 CIA-RDP86-00513R0013

Gas formation in coal mines using the "Donbass" cutter-loader. Trudy Inst.gor.dela 1:155-164 '54. (MLRA 7:12)
(Coal mines and mining) (Mine gases)

"APPROVED FOR RELEASE: Tuesday, August 01, 2000 CIA-RDP86-00513R001344

RAPOPORT, M. YA.

USSR

48. CHANGES IN GAS PRESSURE AND GAS EMISSION IN A STEEPLY DIPPING COAL SEAM SUBJECT TO SUDDEN ERUPTIONS OF COAL AND GAS, DURING ADVANCE OF FACE IN A SEAM ABOVE. Zaitsev, N.A. and Rapoport, M.Ya. (Izv. Akad. Nauk SSSR, Otdel. Tekh. Nauk (Bull. Acad. Sci. U.S.S.R., Sect. Tech. Sci.), Oct. 1954, 175-181). Observations in the Mazurka seam in Arten mine in central Donbass, and in the Dovyatka seam above it, provided useful data for the prevention of eruptions in a dangerous seam by working the seam above.

APPROVED FOR RELEASE: Tuesday, August 01, 2000 CIA-RDP86-00513R0013442

"APPROVED FOR RELEASE: Tuesday, August 01, 2000 CIA-RDP86-00513R001344

KAPPORT, M. YA.

USSR • 49. GAS EMISSION DURING MINING OF THICK STEEPLY DIPPING COAL SEAM IN KUZBASS BY A SYSTEM OF INCLINED LAYERS WITH PACKING. Rapoport, M.Ya. (Izv. Akad. Nauk SSSR, Otdel. Tekh. Nauk (Bull. Acad. Sci. U.S.S.R., Sect. Tech. Sci.), Oct. 1954, 182-184).

APPROVED FOR RELEASE: Tuesday, August 01, 2000 CIA-RDP86-00513R0013442

"APPROVED FOR RELEASE: Tuesday, August 01, 2000 CIA-RDP86-00513R001344

LINDENAU, N.I.; RAPOPORT, M.Ya.; DINEYEV, A.I.; GAPANOVICH, L.N., mladshiy nauchnyy sotrudnik.

Mining coal seams of the Prokop'evsk deposits in Kuznetsk Basin in connection with recent coal and gas outbursts. Ugol' 32 no.12: 14-18 D '57. (MIRA 11:1)

1.Glavnyy inzhener kombinata Kuzbassugol' (for Lindenau) 2.Starshiy nauchnyy sotrudnik Instituta gornogo dela AN SSSR (for Rapoport). 3.Starshiy nauchnyy sotrudnik Vostochnogo nauchno-issledovatel'skogo instituta (for Dineyev). 4.Institut gornogo dela AN SSSR (for Gapanovich).

(Kuznetsk Basin--Coal mines and mining--Accidents)

APPROVED FOR RELEASE: Tuesday, August 01, 2000 CIA-RDP86-00513R0013442

"APPROVED FOR RELEASE: Tuesday, August 01, 2000 CIA-RDP86-00513R001344

RAPOPORT, M.Ya., kand. tekhn. nauk

Methane liberation during the mining of the Dronovskii k2 seam at the "17th Parts"ezd" mine of the Shakhterskantratsit Trust. Ugol' 40 no.6: 65 Je '65. (MIRA 18:7)

1. Institut gornogo dela im. A.A.Skochinskogo.

APPROVED FOR RELEASE: Tuesday, August 01, 2000 CIA-RDP86-00513R0013442

"APPROVED FOR RELEASE: Tuesday, August 01, 2000 CIA-RDP86-00513R001344

RAPOPORT, M.Ya.

Degasation of steep coal beds. Biul. tekh.-ekón. inform. no.3: 3-4 '58. (MIRA 11:6)

(Coal mines and mining)

APPROVED FOR RELEASE: Tuesday, August 01, 2000 CIA-RDP86-00513R0013442