"APPROVED FOR RELEASE: Tuesday, August 01, 2000 CIA-RDP86-00513R001444

S/153/62/005/003/004/004
E111/E452

AUTHORS: Rastrepin, V.N., Klinov, I.Ya.

TITLE: Corrosion of constructional carbon steel in the production of activated carbon

PERIODICAL: Izvestiya vysshikh uchebnykh zavedeniy, Khimiya i khimicheskaya tekhnologiya, v.5, no.3, 1962, 509-513

TEXT: The authors studied the corrosion of waste-gas lines in a carbon black plant with wet additional trapping of carbon black. The study was made to fill a gap in the research of corrosion of equipment in carbon black plants. Corrosion experiments were carried out at 35°C on steel no.3 in waste gas (13.7 to 17.2% CO, 4.9 to 5.2% CO_2, 2.5 to 3.5% O_2, 10.0 to 13.0% H_2, 0.8 to 1.8 g/m^3 H_2S, 0.6 to 1.13 g/m^3 CS_2) saturated with water and containing variable quantities of carbon and carbon pulp. The methods of weight loss and plotting of polarization curves previously described by V.N.Rastrepin were used. The authors conclude that the high rates of corrosion in waste-gas lines in plants are due primarily to the presence of carbon, which intensifies both cathodic and anodic processes. The action of

Card 1/2

APPROVED FOR RELEASE: Tuesday, August 01, 2000 CIA-RDP86-00513R0014443

"APPROVED FOR RELEASE: Tuesday, August 01, 2000 CIA-RDP86-00513R001444

moist carbon on the cathodic process consists in the depolarization of the metal by the carbon. This is followed by the subsequent discharge of hydrogen ions on the carbon which then chemisorbs or absorbs them. In very thin moisture films with a layer of relatively dry carbon, cathodic depolarization is effected mainly by oxygen adsorbed by the carbon from the gas phase. Carbon facilitates the anode reaction by reducing a possible retarding effect by corrosion products. Increase in the H_2S concentration in the waste gases leads to appreciable acceleration of corrosion only with dropwise condensation. Oxygen is most active in thin moisture films (200 μ and less); CO_2 has only a negligible effect in all conditions. There are 2 figures and 1 table.

ASSOCIATION: Moskovskiy institut khimicheskogo mashinostroyeniya Kafedra korrozii (Moscow Institute of Chemical Machinery, Corrosion Department)

SUBMITTED: March 19, 1962

APPROVED FOR RELEASE: Tuesday, August 01, 2000 CIA-RDP86-00513R0014443

"APPROVED FOR RELEASE: Tuesday, August 01, 2000 CIA-RDP86-00513R001444

RASTREPIN, V.N.

Corrosion of structural carbon steel under the effect of recirculating water of activated carbon black producing plant. Zhur.prikl.khim. 35 no.4:808-816 Ap '62. (MIRA 15:4)
(Steel, Structural--Corrosion) (Carbon black)

APPROVED FOR RELEASE: Tuesday, August 01, 2000 CIA-RDP86-00513R0014443

"APPROVED FOR RELEASE: Tuesday, August 01, 2000 CIA-RDP86-00513R001444

26628
S/184/62/000/003/002/004
D040/D113

18.9310

AUTHOR: Rastrepin, V.N., Engineer

TITLE: Protection of steel from corrosion by circulating water at anactive carbon black plant

PERIODICAL: Khimicheskoye mashinostroyeniye, no. 3, 1962, 26-29

TEXT: The Omskiy sazhevyy zavod (Omsk Carbon Black Plant) developed means of counteracting intense equipment corrosion resulting in recirculation pumps breaking down every 12-15 days. A production process in which 5% soot escapes the electric filters, is trapped, and then recirculates, is briefly described. By studying steel and gray cast iron specimens held in the circulating water and the electric potential in the water carrying the soot, it was concluded that electrochemical corrosion and possibly, also erosion were involved. Increasing soot content in the circulating water greatly increased the corrosion rate, while attempts to reduce corrosion by adding fresh water or ammonia were virtually ineffective. The discovery of high-dissolving currents is said to be important since metal destruction was often explained by the erosive effect of the soot. The effect of adding potassium dichromate to the circulating water further con-

Card 1/2

APPROVED FOR RELEASE: Tuesday, August 01, 2000 CIA-RDP86-00513R0014443

"APPROVED FOR RELEASE: Tuesday, August 01, 2000 CIA-RDP86-00513R001444

Protection of steel ... S/184/62/000/003/002/004
D040/D113

firmed that the corrosion was electrochemical. Cheap ethynol plastic coatings used by the plant are a reliable means of protection; such plastics with powdered diabase added are hard and erosion-resistant, with bitumen added are more plastic and impermeable, and with ground asbestos added are stronger and more vibration- and strain-resistant. Specimens of several plastics based on phenolformaldehyde resins, particularly "textofaolite" materials, were tested and proved fully applicable. The use of plastic coatings for ferrous metal in soot plant equipment and stainless alloys or metals for single small parts of control equipment elements which cannot be made of plastics or protected by coatings, is recommended. Of the metals studied in circulating water with up to 14 g/l soot content, only Ti and Х18Н12М3Т (Kh18N12M3T) steel were not subject to pitting. There are 6 figures and 2 tables.

Card 2/2

APPROVED FOR RELEASE: Tuesday, August 01, 2000 CIA-RDP86-00513R0014443

"APPROVED FOR RELEASE: Tuesday, August 01, 2000 CIA-RDP86-00513R001444

GERSHUNS, A.L.; VAYL, Ye.I.; MIRNAYA, A.P.; RASTREPINA, I.A.; SIGALOVA, L.V.

Photocolorimetric method of determining mercury. Zav. lab. 27 no. 12:1465-1467 '61. (MIRA 15:1)

1. Khar'kovskiy gosudarstvennyy universitet im. A.M. Gor'kogo.
(Mercury--Analysis)

APPROVED FOR RELEASE: Tuesday, August 01, 2000 CIA-RDP86-00513R0014443

"APPROVED FOR RELEASE: Tuesday, August 01, 2000 CIA-RDP86-00513R001444

BUGROVA, V. P. ; GORDEEVA, YE. N.;
KARPOVSKAYA, A. P.; KOKINA, N. N. ;
MILYUKOV, F. G.; PALILOV, N. A. ;
RASTREPINA, V. S.

onions

Adopting warm storage of onion seed plants, Sad i og., No. 8, 1952

Monthly List of Russian Accessions, Library of Congress, October, 1952. UNCLASSIFIED

APPROVED FOR RELEASE: Tuesday, August 01, 2000 CIA-RDP86-00513R0014443

"APPROVED FOR RELEASE: Tuesday, August 01, 2000 CIA-RDP86-00513R001444

BUGROVA, V. P.; GOROKHOVA, YE. N.; KARPOVSKAYA, A. P.; KOKINA, N. N.; MILYUKOV, F. G.; PALILOV, N. A.; RASTREPINA, V. S.

Onions

Adopting warm storage of onion seed plants, Sad i og., No. 8, 1952.

9. Monthly List of Russian Accessions, Library of Congress, October 1953, Uncl.
2

APPROVED FOR RELEASE: Tuesday, August 01, 2000 CIA-RDP86-00513R0014443

"APPROVED FOR RELEASE: Tuesday, August 01, 2000 CIA-RDP86-00513R001444

BUGROVA, V. P.; GORKHOVA, YE. N.; KARPOVSKAYA, A. P.; KOKINA, N. N.; MIKHUKOV, F.G.; PALILOV, N. A.; RASTREPINA, V. S.

Onions

Adopting warm storage of onion seed plants, Sad i og., No. 8, 1952

Monthly List of Russian Accessions, Library of Congress, October 1952. UNCLASSIFIED.

APPROVED FOR RELEASE: Tuesday, August 01, 2000 CIA-RDP86-00513R0014443

"APPROVED FOR RELEASE: Tuesday, August 01, 2000 CIA-RDP86-00513R001444

RASTRIGIN, L.

Random scan method. Izv.AN Latv.SSR no.3:23-27 '63.
(MIRA 16:5)

1. Institut elektroniki i vychislitel'noy tekhniki AN Latviyskoy SSR.
(Automotic control)

APPROVED FOR RELEASE: Tuesday, August 01, 2000 CIA-RDP86-00513R0014443

"APPROVED FOR RELEASE: Tuesday, August 01, 2000 CIA-RDP86-00513R001444

RASTRIGIN, L.A.

Dynamics of the passing of an irregularly rigid shaft over a resonance zone taking into consideration its connection with the engine. Trudy Inst. mash. 1:89-100 '59. (MIRA 12:12)
(Shafting) (Resonance)

APPROVED FOR RELEASE: Tuesday, August 01, 2000 CIA-RDP86-00513R0014443

"APPROVED FOR RELEASE: Tuesday, August 01, 2000 CIA-RDP86-00513R001444

S/123/60/000/010/010/011
A004/A001

Translation from: Referativnyy zhurnal. Mashinostroyeniye, 1960, No. 10, p. 314, # 51289

AUTHOR: Rastrigin, L.A.

TITLE: Oscillations of a Flexible Shaft Passing the Critical Speed, Under Consideration of Its Coupling to the Motor

PERIODICAL: V sb.: Probl. prochnosti v mashinostr. No. 5, Moscow, AN SSSR, 1959, pp. 10-33

TEXT: The author presents calculations of buckling oscillations of a shaft with a disk, placed in the center, passing the critical speed, taking into account the power coupling between the shaft and the motion. The power balance during the passing of the resonance zone is investigated. There are 13 figures and 6 references.

K. Yu.A.

Translator's note: This is the full translation of the original Russian abstract.

Card 1/1

APPROVED FOR RELEASE: Tuesday, August 01, 2000 CIA-RDP86-00513R0014443

"APPROVED FOR RELEASE: Tuesday, August 01, 2000 CIA-RDP86-00513R001444

RASTRIGIN, L. A., Cand Tech Sci -- (diss) "Non-stationary motion of a flexible rotor with engine, as an autonomous system." Moscow, 1960. 10 pp; (Academy of Sciences USSR, Inst of Machine ~~Practice~~ Studies); 150 copies; price not given; bibliography at end of text (16 entries); (KL, 25-60, 134)

APPROVED FOR RELEASE: Tuesday, August 01, 2000 CIA-RDP86-00513R0014443

"APPROVED FOR RELEASE: Tuesday, August 01, 2000 CIA-RDP86-00513R001444

PHASE I BOOK EXPLOITATION SOV/4415

Akademiya nauk SSSR. Institut mashinovedeniya

Problemy prochnosti v mashinostroyenii, vyp. 6 (Problems of Strength in Machine Building No. 6) Moscow, 1960. 87 p. 3,000 copies printed.

Resp. Ed.: F. M. Dimentberg, Doctor of Technical Sciences; Ed. of Publishing House: P. R. Zolotov; Tech. Ed.: I. F. Koval'skaya.

PURPOSE: This collection of articles is intended for engineers dealing with the problem of machine vibrations.

COVERAGE: The collection contains works which were originally presented at the Uchenyy sovet i Seminar prochnosti Instituta mashinovedeniya AN SSSR (Scientific Council and Seminar for Strength Research of the Institute of Science of Machines, Academy of Sciences USSR), in 1958-59. The following problems are investigated: vibrations in machines, balancing of flexible rotors (taking friction into account), the effect of impulses on flexible shaft connected to the engine, vibra-

Card 1/3

APPROVED FOR RELEASE: Tuesday, August 01, 2000 CIA-RDP86-00513R0014443

"APPROVED FOR RELEASE: Tuesday, August 01, 2000 CIA-RDP86-00513R001444

tion of a shaft with clearance, determination of frequency and mode of free vibrations of variable cross-section bars by means of special functions, and the calculation of self-excited vibrations in a computer system. No personalities are mentioned. References accompany individual articles.

TABLE OF CONTENTS:

Foreword 3

Gusarov, A. A., and F. M. Dimentberg. Balancing Flexible Rotors With [Uniformly] Distributed and Concentrated Masses 5

Rastrigin, L. A. Motion of a Flexible Rotor Connected to an Engine Loaded With a Transverse Force 38

Karamyshkin, V. V. Application of the Theory of Hypergeometric Functions to the Problem of Vibration of Bars 49

APPROVED FOR RELEASE: Tuesday, August 01, 2000 CIA-RDP86-00513R0014443

"APPROVED FOR RELEASE: Tuesday, August 01, 2000 CIA-RDP86-00513R001444

Sergeyev, V. I. Calculation of Self-Excited Vibrations in the Presence of Clearance and Coulomb Damping in the System of the Automated Drive of Bridge-Type Computers 55

Banakh, L. Ya., F. M. Dimentberg, and N. V. Zvinogrodskiy. Vibrations of a Heavy Shaft With [Uniformly] Distributed Mass and Clearance in One Bearing 68

AVAILABLE: Library of Congress

Card 3/3

VK/dwm/ec
12-19-60

APPROVED FOR RELEASE: Tuesday, August 01, 2000 CIA-RDP86-00513R0014443

"APPROVED FOR RELEASE: Tuesday, August 01, 2000 CIA-RDP86-00513R001444

S/179/60/000/01/025/034
E191/E581

AUTHOR: Rastrigin, L. A. (Moscow)

TITLE: The Mechanism of Motion of a Linear Oscillator in its Transition Through Resonance

PERIODICAL: Izvestiya Akademii nauk SSSR, Otdeleniye tekhnicheskikh nauk, Mekhanika i mashinostroyeniye, 1960, Nr 1, pp 169-171 (USSR)

ABSTRACT: An interpretation of the behaviour of a linear oscillator in its transition through resonance is given, by which the effect of the resonance condition upon the oscillator is equivalent to the action of a certain force impulse on an oscillator transformed in a certain manner. It is stated that such a treatment of the resonance effect in terms of a force makes it possible to clarify the mechanism of the increased amplitude in the resonance region and to find the cause of fluctuations in the region beyond resonance. A linear oscillator subject to an exciting force with variable amplitude and phase is considered. A transformation of the time variable yields four equations which describe the motion

Card 1/3

APPROVED FOR RELEASE: Tuesday, August 01, 2000 CIA-RDP86-00513R0014443

"APPROVED FOR RELEASE: Tuesday, August 01, 2000 CIA-RDP86-00513R001444

S/179/60/000/01/025/034
E191/E581

The Mechanism of Motion of a Linear Oscillator in its Transition Through Resonance

of certain new oscillators subject to non-periodic forces. The motion of the original oscillator is a super-position of the motions of the new oscillators, namely, that of two motions with two different frequencies of which one is the difference between the phase frequency and the natural frequency of the original oscillator and the other frequency is the sum of the phase frequency and the natural frequency. The difference frequency is the fundamental motion. It is shown that, in the simplest case without damping, the effect of resonance on the original oscillator is equivalent to the effect of a certain force on a certain reduced oscillator. This force continuously increases and reaches infinity at resonance, after which it changes sign and continuously decreases to zero when the forcing frequency tends to infinity. The behaviour of a flexible rotor with a single disc, when the angular velocity increases linearly, can also be described by the equations of the present

Card 2/3

APPROVED FOR RELEASE: Tuesday, August 01, 2000 CIA-RDP86-00513R0014443

"APPROVED FOR RELEASE: Tuesday, August 01, 2000 CIA-RDP86-00513R001444

S/179/60/000/01/025/034
E191/E581

The Mechanism of Motion of a Linear Oscillator in its Transition Through Resonance

paper.
There are 1 figure and 2 Soviet references.

SUBMITTED: October 28, 1959

Card 3/3

APPROVED FOR RELEASE: Tuesday, August 01, 2000 CIA-RDP86-00513R0014443

"APPROVED FOR RELEASE: Tuesday, August 01, 2000 CIA-RDP86-00513R001444

82937

S/103/60/021/009/005/013
B012/B063

16,9500

AUTHOR: Rastrigin, L. A. (Moscow)

TITLE: Control of the Extreme Values by the Method of Random Scanning

PERIODICAL: Avtomatika i telemekhanika, 1960, Vol. 21, No. 9, pp. 1264-1271

TEXT: On the basis of W. Ross Ashby's idea of random scanning (Ref. 2), the method mentioned in the title is applied to the control of the extreme values of multi-parametric objects. It is shown that this method differentiates between the values of minima and attempts to find the least minimum in statistical respect. Among other methods used at present the author mentions Kantorovich's method. W. Ross Ashby's idea is briefly explained with the help of various terms of the theory of control. Then, random scanning is applied to problems of optimization. The function $Q(x_1, x_2, \ldots, x_n)$ is minimized by means of the "state" $\tilde{p}$ of the "object" Q. This "state" does not mean its coordinates in the "space of state", but the velocity of the object moving along the coordinates. The value of the derivative

Card 1/3

APPROVED FOR RELEASE: Tuesday, August 01, 2000 CIA-RDP86-00513R0014443

"APPROVED FOR RELEASE: Tuesday, August 01, 2000 CIA-RDP86-00513R001444

82937

Control of the Extreme Values by the Method of Random Scanning

S/103/60/021/009/005/013
B012/B063

$\frac{dQ}{dt}$, formula (3) and formula (4), respectively, may be used as a natural criterion for the selection of random states. It is shown that the noise-proof feature of the system is diminished by using this criterion. The value of the Q function is therefore continuously compared with a certain level η. This level varies at a constant rate $q < 0$. Though this method shortens the response time of tuning, it is simple and reliable. In this case, formula (5) serves as a criterion for selection. The level η is a form of memory that "memorizes" $\eta > 0$ instead of "Q". This memory is introduced by means of a comparative signal. Fig. 3 shows the block diagram of a device that controls extreme values on the basis of the above-mentioned method of random scanning. This device corresponds to the algorithm of random scanning with the selection criterion of formula (5). This algorithm is described in the following. The natural vibrations produced by hysteresis lead to some peculiarities in the operation of this device. In some cases it is therefore possible to introduce this hysteresis "intentionally" into the control system. Another specific feature is the time-dependent detuning of the control object resulting from hysteresis. This makes it possible for the system to select the various minima of the Q function

Card 2/3

APPROVED FOR RELEASE: Tuesday, August 01, 2000 CIA-RDP86-00513R0014443

"APPROVED FOR RELEASE: Tuesday, August 01, 2000 CIA-RDP86-00513R001444

Control of the Extreme Values by the Method of Random Scanning

82937
S/103/60/021/009/005/013
B012/B063

if there are any. Optimization by the method of random scanning according to the scheme given in the present paper was successfully verified by laboratory experiments which are briefly described. There are 5 figures, 1 table, and 3 references: 2 Soviet and 1 US.

SUBMITTED: April 18, 1960

4

Card 3/3

APPROVED FOR RELEASE: Tuesday, August 01, 2000 CIA-RDP86-00513R0014443

"APPROVED FOR RELEASE: Tuesday, August 01, 2000 CIA-RDP86-00513R001444

S/879/62/000/000/027/088
D234/D308

AUTHORS: Rastrigin, L. A. and Kozus, V. M. (Moscow)

TITLE: Use of the method of random search for estimating the stressed state in plates

SOURCE: Teoriya plastin i obolochek; trudy II Vsesoyuznoy konferentsii, L'vov, 15-21 sentyabrya 1961 g. Kiev, Izd-vo AN USSR, 1962, 191-195

TEXT: The stress function is represented as a series in biharmonic functions;

$$\varphi = \sum c_i \varphi_i \qquad (1)$$

which is substituted into the boundary conditions and gives:

$$\Phi_n(s, c_1, c_2, \ldots, c_n) = 0;$$
$$\Phi_\tau(s, c_1, c_2, \ldots, c_n) = 0 \qquad (3)$$

Card 1/2

APPROVED FOR RELEASE: Tuesday, August 01, 2000 CIA-RDP86-00513R0014443

"APPROVED FOR RELEASE: Tuesday, August 01, 2000 CIA-RDP86-00513R001444

s being the coordinate along the edge. The authors introduce a quality function Q determining the degree of inaccuracy of an approximate solution. Possible definitions of Q are e.g.

$$Q = \oint_s (|\bar{\Phi}_n| + |\bar{\Phi}_\tau|)ds; \quad Q = \oint_s (\bar{\Phi}_n^2 + \bar{\Phi}_\tau^2)ds \qquad (4)$$

The constants c_1 should be chosen so as to minimize Q, and the problem of minimization seems to be best solved by random search. The extension of an infinite strip with a circular hole is considered as an example. Adaptation of the method to a computer is described for this case. There are 3 figures and 1 table.

APPROVED FOR RELEASE: Tuesday, August 01, 2000 CIA-RDP86-00513R0014443

"APPROVED FOR RELEASE: Tuesday, August 01, 2000 CIA-RDP86-00513R001444

RASTRIGIN, L.A.

Dynamics of the nonstationary motion of an independent rotor on flexible supports. Prob.proch.v mashinostr. no.7:29-49 '62. (MIRA 15:4)

(Rotors)

APPROVED FOR RELEASE: Tuesday, August 01, 2000 CIA-RDP86-00513R0014443

"APPROVED FOR RELEASE: Tuesday, August 01, 2000 CIA-RDP86-00513R001444

RASTRIGIN, L.A.

Dynamics of a rotor with electric drive. Prob.proch.v mashinostr., no.7:50-57 '62. (MIRA 15:4)

(Rotors)

APPROVED FOR RELEASE: Tuesday, August 01, 2000 CIA-RDP86-00513R0014443

"APPROVED FOR RELEASE: Tuesday, August 01, 2000 CIA-RDP86-00513R001444

40539

S/586/62/023/089-90/001/001
1054/1254

26 2120

AUTHOR: Rastrigin, L. A.

TITLE: Automatic balancing of rotors by method of random trial

SOURCE: Akademiya nauk SSSR, Institut mashinovedeniya. Seminar po teorii mashin i mekhanizmov. Trudy, v. 23, no. 89/90, Moscow, 1962, 5-14

TEXT: The introduction gives a survey of the practical problems and importance of balancing of rotors. The proposed method of balancing by random trial is based on the principle that out-of-balance masses are added and in various planes and their angular and radical position varied at random during operation. The recorded vibrations indicated the optimum position of the added masses i. e. at which the minimum amplitude is achieved. Electical and hydraulic systems are schematically described, by which it is possible to achieve the shift of the masses, even at very high speeds such as is met with in gyros. An experimental apparatus was built. Photographs and shematic drawings are given. The results obtained satisfy the theoretical predictions. The accuracy of the method depends on the sensitivity of the measuring instruments. In the given case the sensitivity was poor and this explains why the amplitudes were reduced 3-5 times only. There are 7 figures.

X

Card 1/1

APPROVED FOR RELEASE: Tuesday, August 01, 2000 CIA-RDP86-00513R0014443

"APPROVED FOR RELEASE: Tuesday, August 01, 2000 CIA-RDP86-00513R001444

RASTRIGIN, L.A., kand.tekhn.nauk

Automatic damping of vibrations. Vest.mashinostr. 42 no.5:9-13 My '62. (MIRA 15:5)

(Damping (Mechanics))

APPROVED FOR RELEASE: Tuesday, August 01, 2000 CIA-RDP86-00513R0014443

"APPROVED FOR RELEASE: Tuesday, August 01, 2000 CIA-RDP86-00513R001444

ACCESSION NR: AT4038162 S/2690/63/005/006/0043/0066

AUTHOR: Rastrigin, L. A.

TITLE: Random-search method in problems of multiparameter optimization

SOURCE: AN LatSSR. Institut elektroniki i vy*chislitel'noy tekhniki. Trudy*, v. 5, 1963. Avtomatika i vy*chislitel'naya tekhnika (Automation and computer engineering), no. 6, 43-66

TOPIC TAGS: optimal control, algorithm, random walk, numerical analysis, statistical analysis

ABSTRACT: The problem of optimization is formulated as of finding a vector $X^* = (x_1^*, x_2^*, \ldots, x_n^*)$ for which a quality function or a target function $Q = Q(X)$ assumes the least value, $Q(X^*) \leq Q(X)$, where $\vec{X}$, $\vec{X}^* \in P$ when applied to a definite set of n-dimensional vec-

Card 1/3

APPROVED FOR RELEASE: Tuesday, August 01, 2000 CIA-RDP86-00513R0014443

"APPROVED FOR RELEASE: Tuesday, August 01, 2000 CIA-RDP86-00513R001444

ACCESSION NR: AT4038162

tors $P = \{\vec{X}\}$ with $\vec{X} = (x_1, x_2, \ldots, x_n)$ finite or infinite. Both determined or regular algorithms and random algorithms for determining the solution to this problem are discussed, and it is shown that the method of random search, for which practical algorithms are constructed in several modifications, is quite universal and is capable of coping with almost any situation. Many advantages of the random-search method are listed. Among the regular methods described are the scanning method, the Gauss-Seidel method, the gradient method, and the steepest descent method. In the random-search method, constraints of the form $H_j(\vec{X}) \geq 0$ $(j = 1, \ldots, m)$ separate that region of the parameter space, on the element of which the search for the minimizing point $\vec{X}^*$ is made. The minimized quality function is then expressed in the form

Card 2/3

APPROVED FOR RELEASE: Tuesday, August 01, 2000 CIA-RDP86-00513R0014443

"APPROVED FOR RELEASE: Tuesday, August 01, 2000 CIA-RDP86-00513R001444

ACCESSION NR: AT4038162

$$\bar{Q} = Q + \sum_{j=1}^{m} A_j (1 - sign\ H_j),$$

where A_j is a sufficiently large coefficient of the significance of the fulfillment of the constraint A_j. The random-search algorithms are subdivided into stepping and continuous, local and nonlocal, with and without learning. Orig. art. has: 10 figures and 28 formulas.

ASSOCIATION: None

SUBMITTED: 00 DATE ACQ: 04Jun64 ENCL: 00

SUB CODE: MA, DP NR REF SOV: 023 OTHER: 007

Card 3/3

APPROVED FOR RELEASE: Tuesday, August 01, 2000 CIA-RDP86-00513R0014443

"APPROVED FOR RELEASE: Tuesday, August 01, 2000 CIA-RDP86-00513R001444

ACCESSION NR: AT4038163 S/2690/63/005/006/0067/0075

AUTHORS: Grube, A. P.; Rastrigin, L. A.

TITLE: Nonlinear problem of optimal regulation with modulating signal

SOURCE: ANLatSSR. Institut elektroniki i vy*chislitel'noy tekhniki. Trudy*, v. 5, 1963. Avtomatika i vy*chislitel'naya tekhnika (Automation and computer engineering), no. 6, 67-75

TOPIC TAGS: optimal control, nonlinear equation, modulation, noise, control system stability, automatic control theory

ABSTRACT: Iteration in terms of a small parameter (reduced feedback coefficient) is used to obtain a solution for the regulation equation of a controlled object with a quadratic quality function. The iteration process is shown to be rapidly converging and the main linearity of the system comes into play only in the second approxima-

Card 1/2

APPROVED FOR RELEASE: Tuesday, August 01, 2000 CIA-RDP86-00513R0014443

"APPROVED FOR RELEASE: Tuesday, August 01, 2000 CIA-RDP86-00513R001444

ACCESSION NR: AT4038163

tion. The influence of noise is analyzed and it is shown that its effect consists in shifting the center of the limit cycle. The constant deviation, which the system has regardless of the action of the extremal regulator employed, is estimated. Orig. art. has: 7 figures and 22 formulas.

ASSOCIATION: None

SUBMITTED: 00 DATE ACQ: 04Jun64 ENCL: 00

SUB CODE: MA, DP NR REF SOV: 005 OTHER: 000

Card 2/2

APPROVED FOR RELEASE: Tuesday, August 01, 2000 CIA-RDP86-00513R0014443

"APPROVED FOR RELEASE: Tuesday, August 01, 2000 CIA-RDP86-00513R001444

RASTRIGIN, Leonard Andreyevich; BAZHANOVA, S., red.; PILADZE, Ye., tekhn. red.

[In the world of chance] V mire sluchainykh sobytii. Riga, Izd-vo AN Latviiskoi SSR, 1963. 78 p. (MIRA 16:10)
(Probabilities)

APPROVED FOR RELEASE: Tuesday, August 01, 2000 CIA-RDP86-00513R0014443

"APPROVED FOR RELEASE: Tuesday, August 01, 2000 CIA-RDP86-00513R001444

ACCESSION NR: AT4038164 S/2690/63/005/006/0077/0086

AUTHOR: Rastrigin, L. A.

TITLE: Extremal regulation of multiparameter systems with single-frequency modulating signal

SOURCE: AN LatSSR. Institut elektroniki i vy*chislitel'noy tekhniki. Trudy*, v. 5, 1963. Avtomatika i vy*chislitel'naya tekhnika (Automation and computer engineering), no. 6, 77-86

TOPIC TAGS: optimal control, algorithm, modulation, control system stability, automatic control theory

ABSTRACT: The author has demonstrated earlier (Avtomatika i vy*-chislitel'naya tekhnika, 4, Izd-vo AN LatvSSR, 1963) that a two-parameter system can be regulated at a fixed phase, but in the case of three and more parameters such an adjustment is impossible unless the phases of the modulating signals are varied. Consequently, a

Card 1/3

APPROVED FOR RELEASE: Tuesday, August 01, 2000 CIA-RDP86-00513R0014443

"APPROVED FOR RELEASE: Tuesday, August 01, 2000 CIA-RDP86-00513R001444

ACCESSION NR: AT4038164

random algorithm is selected for the excitation phase variations and it is demonstrated that such a procedure offers several advantages in the design, manufacture, and operation of extremal regulators of this type. By expanding the quality function in powers of the regulated parameters, and by making use of the fact that all the modulating signals are of the same frequency it becomes possible to determine the average rate of displacement of the system of the parameter space during the regulation. The possibility of gradient motion of the system towards the extremal position is considered and it is demonstrated that the only way of minimizing the quality function is by random variation of the excitation phases. The mathematical expectation of the mean value of the derivative of the quality function on the random variation of the phases is then determined. The practical realization of such an extremal-regulation multiparameter system with single-frequency modulation is briefly discussed. Orig. art. has: 5 figures and 22 formulas.

Card 2/3

APPROVED FOR RELEASE: Tuesday, August 01, 2000 CIA-RDP86-00513R0014443

"APPROVED FOR RELEASE: Tuesday, August 01, 2000 CIA-RDP86-00513R001444

ACCESSION NR: AT4038164

ASSOCIATION: None

SUBMITTED: 00 DATE ACQ: 04Jun64 ENCL: 00

SUB CODE: MA, DP NR REF SOV: 005 OTHER: 000

Card 3/3

APPROVED FOR RELEASE: Tuesday, August 01, 2000 CIA-RDP86-00513R0014443

"APPROVED FOR RELEASE: Tuesday, August 01, 2000 CIA-RDP86-00513R001444

ACCESSION NR: AT4038175 S/2690/63/005/006/0237/0255

AUTHOR: Rastrigin, L. A.; Sy*tenko, L. V.

TITLE: High-speed extremal regulator based on a random-search method

SOURCE: AN SSSR. Institut elektroniki i vy*chislitel'noy tekhniki. Trudy*, v. 5, 1963. Avtomatika i vy*chislitel'naya tekhnika (Automation and computer engineering), no. 6, 237-255

TOPIC TAGS: computer control, computer data processing, decision making, optimal operation, self adaptive system

ABSTRACT: An extremal self-adaptive digital regulator for the optimization of objects with many parameters is described. The main part of the regulator is a generator of random pulse sequences, and the optimal mode is determined by random search; this is shown to afford a faster degree of convergence in the adjustment of many-parameter objects than other methods (e.g., the gradient method) and to result in an operating speed two orders of magnitude higher than hitherto developed systems. The extremal regulator is of the "learning" type, in that parameter changes which lead to improved quality have a greater probability of oc-

Card 1/3

APPROVED FOR RELEASE: Tuesday, August 01, 2000 CIA-RDP86-00513R0014443

"APPROVED FOR RELEASE: Tuesday, August 01, 2000 CIA-RDP86-00513R001444

ACCESSION NR: AT4038175

curence. The main units of the regulator (random-sequence pulse generator, sequence to amplitude converter [modifier], model of the object, logic block, memory block, limiters) are described in detail (see Fig. 1 of Enclosure), and the results of an experimental check on the operation of the regulator are reported. The adjustment speed increases with increasing size of the discrete steps used in the variation of the parameter and memory. The adjustment accuracy increases with the memory step and decreases with an increasing parameter step. Compensation for null drift and for industrial pickup noise is provided. Orig. art. has: 17 figures and 1 table.

ASSOCIATION: none

SUBMITTED: 00 ENCL: 01 SUB CODE: DP

NO REF SOV: 009 OTHER: 000

Card 2/3

APPROVED FOR RELEASE: Tuesday, August 01, 2000 CIA-RDP86-00513R0014443

"APPROVED FOR RELEASE: Tuesday, August 01, 2000 CIA-RDP86-00513R001444

ACCESSION NR: AT4038175

ENCLOSURE: 01

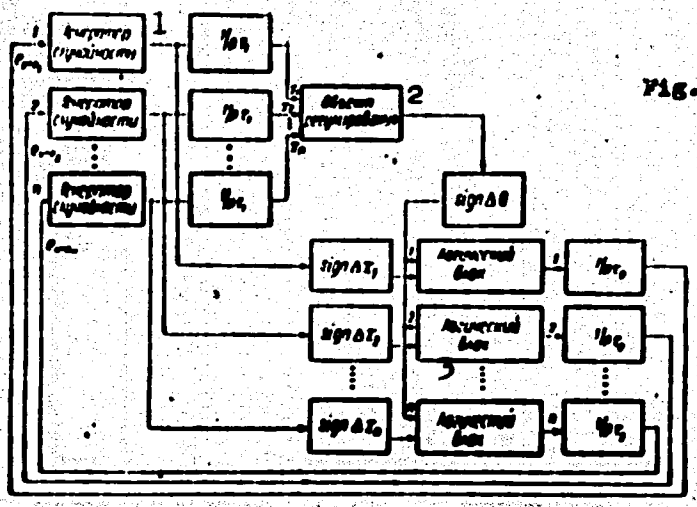

Fig. 1. Block diagram of multi-parameter self-adaptive extremal system operating on the random-search principle

1 - random generator
2 - regulated object
3 - logic block

Card 3/3

APPROVED FOR RELEASE: Tuesday, August 01, 2000 CIA-RDP86-00513R0014443

"APPROVED FOR RELEASE: Tuesday, August 01, 2000 CIA-RDP86-00513R001444

RASTRIGIN, L.A. (Riga)

Convergence of a random search method with optimalizing control of multiparameter systems. Avtom. i telem. 24 no.11:1467-1473 N '63. (MIRA 16:12)

APPROVED FOR RELEASE: Tuesday, August 01, 2000 CIA-RDP86-00513R0014443

"APPROVED FOR RELEASE: Tuesday, August 01, 2000 CIA-RDP86-00513R001444

MUTSENIYEKS, V.A. [Mucenieks, V.] (Riga); RASTRIGIN, L.A. (Riga)

Optimalizing control of continuous multiparameter systems using a random search technique. Izv AN SSSR Tekh. kib. no.1:101-110 Ja-F '64 (MIRA 17:8)

APPROVED FOR RELEASE: Tuesday, August 01, 2000 CIA-RDP86-00513R0014443

"APPROVED FOR RELEASE: Tuesday, August 01, 2000 CIA-RDP86-00513R001444

L 56000-65 EWT(d)/EWP(v)/EEC-4/T/EWP(k)/EWP(h)/EED-2/EWP(1) Pq-4/Pf-4/Pg-4/Pk-4 IJP(c) BB/GG

ACCESSION NR: AR5014014 UR/0372/65/000/004/G001/G002
62-506(047)

46
B

SOURCE: Ref. zh. Kibernetika. Svodnyy tom, Abs. 4G9

AUTHOR: Kovalev, G. N.; Rastrigin, L. A.; Stradyn', Ya. P.

TITLE: Some problems in chemical cybernetics 16

CITED SOURCE: Izv. AN LatvSSR. Ser. fiz. i tekhn. n., no. 3, 1964, 103-119

TOPIC TAGS: chemical process characteristic, automatic process control, regulation problem equation

TRANSLATION: The report evaluates the characteristics of chemical processes, i.e. complexity, lack of adequate mathematical description, multicomponent character, high noise factor, difficulty of observation, nearly total lack of adequately reliable chemical sensors, and great inertia. A basic plan is drawn for automatic and semiautomatic control of chemical processes. The control problem is formulated mathematically. Bibl. with 47 titles; 5 illustrations. B. G.

SUB CODE: IE, GC ENCL: 00

Card 1/1

APPROVED FOR RELEASE: Tuesday, August 01, 2000 CIA-RDP86-00513R0014443

"APPROVED FOR RELEASE: Tuesday, August 01, 2000 CIA-RDP86-00513R001444

L 19452-65 EWT(d)/EPF(n)-2/EWP(1) Po-4/Pq-4/Pg-4/Pu-4/Pk-4/Pl-4 IJP(c)/AEDC(a)/SSD/ASD(a)-5/ASD(s)/AFMDC/AFETR/AFTC(p)/RAEM(a)/RAEM(d)/ESD(dp) WW/BC

ACCESSION NR: AP4049190 S/0102/64/000/005/0055/0063

B

AUTHOR: Rastry*gin, L. A. (Rastrigin, L. A.) (Riga); Ry*pa, K. K. (Ripa, K. K.) (Riga)

9

TITLE: Simulation of learning in extremal control of a multiparameter plant by the random search method

SOURCE: Avtomaty*ka, no. 5, 1964, 55-63

TOPIC TAGS: automatic control, automatic control design, automatic control system, automatic control theory, multiparameter plant

ABSTRACT: A learning algorithm used in the extremal control of general multiparameter plants is theoretically explored. A few supporting experiments with an M-3 high-speed computer are cited. It is stated that the learning tends to cut down the average time of adjustment of the controlled system. As the system grows more complicated, the efficiency of learning falls off, which fact is

Card 1/2

APPROVED FOR RELEASE: Tuesday, August 01, 2000 CIA-RDP86-00513R0014443

"APPROVED FOR RELEASE: Tuesday, August 01, 2000 CIA-RDP86-00513R001444

L 19452-65
ACCESSION NR: AP4049190

0

theoretically explained in the article. Orig. art. has: 9 figures and 17 formulas.

ASSOCIATION: none

SUBMITTED: 16Aug63 ENCL: 00

SUB CODE: IE NO REF SOV: 003 OTHER: 001

Card 2/2

APPROVED FOR RELEASE: Tuesday, August 01, 2000 CIA-RDP86-00513R0014443

"APPROVED FOR RELEASE: Tuesday, August 01, 2000 CIA-RDP86-00513R001444

L 31112-65 EWT(d)/EPF(n)-2/EWP(1) Po-4/Pq-4/Pg-4/Pae-2/Pu-4/Pk-4/Pl-4
IJP(c) WW/BC

ACCESSION NR: AT5000969 S/2690/64/006/000/0027/0034

53
51
B+1

AUTHOR: Rastrigin, L. A.

TITLE: Step system of multiparameter optimization using the method of random search

SOURCE: AN LatSSR. Institut elektroniki i vychislitel'noy tekhniki. Trudy, v. 6. Riga, 1964. Avtomatika i vychislitel'naya tekhnika (Automation and computer technology), no. 7, 27-34

TOPIC TAGS: multiparameter system, automatic control, automatic control design, automatic control system, automatic control theory

ABSTRACT: An earlier author's article (Izv. AN SSSR, OTN, Tekhn. kibernetika, 1964, 1) considered the continuous optimization of a perfect multiparameter system by a random-search method. The present article considers a more practical case, viz., a step algorithm for system optimization by the same method with application of a random "penalty." The problem is to minimize the quality function Q in an n-parameter extremal system or, in other words, to find the target X^*. An algorithm connecting two adjacent states of the system is

Card 1/2

APPROVED FOR RELEASE: Tuesday, August 01, 2000 CIA-RDP86-00513R0014443

"APPROVED FOR RELEASE: Tuesday, August 01, 2000 CIA-RDP86-00513R001444

L 31112-65

ACCESSION NR: AT5000969

2

developed which tends to minimise Q in the following way: a step is made in a random direction if Q does not decrease; if it does, the next step is made in the same direction; the system "feels" various directions at random and having sensed a favorable one, moves along it as long as Q decreases; if Q begins to increase, the system makes random trials again. Thus, the system will move along an orbit at a distance ρ^* to the target. In real systems, it is easier to provide a random step by random displacements at the same modulus along the coordinate axes. In this case, the choice of the direction along one of the axes is independent of the other axes, and the choice of random direction in an n-dimensional space can be reduced to n binary selections with a 0.5 probability. This approximation was verified on a digital computer. "The author wishes to thank R. A. Kats who carried out the necessary computations." Orig. art. has: 8 figures and 9 formulas.

ASSOCIATION: Institut elektroniki i vychislitel'noy tekhniki AN LatSSR (Institute of Electronics and Computer Technology, AN LatSSR)

SUBMITTED: 00 ENCL: 00 SUB CODE: IE, MA

NO REF SOV: 003 OTHER: 000

Card 2/2

APPROVED FOR RELEASE: Tuesday, August 01, 2000 CIA-RDP86-00513R0014443

"APPROVED FOR RELEASE: Tuesday, August 01, 2000 CIA-RDP86-00513R001444

L 31111-65 EWT(d) IJP(c)

ACCESSION NR: AT5000970 S/2690/64/006/000/0035/0048

AUTHOR: Rastrigin, L. A.

TITLE: Comparing Gaussian, Monte-Carlo, and random-search methods used for solving linear algebraic equations

SOURCE: AN LatSSR. Institut elektroniki i vychislitel'noy tekhniki. Trudy, v. 6. Riga, 1964. Avtomatika i vychislitel'naya tekhnika (Automation and computer technology), no. 7, 35-48

TOPIC TAGS: algebraic equation, Gaussian method, Monte-Carlo method, random search method

ABSTRACT: Solving higher-order sets of algebraic equations is associated with serious computing difficulties. As the Gaussian method involves a number of arithmetical operations proportional to the cube of the order n of the set, and as the Monte-Carlo method has a rather poor convergence, the author tries the method of random search and finds this approximate formula for the number of steps necessary for arriving in the vicinity ε of the target: $N_\varepsilon \approx \frac{\sqrt{2\pi n}\ln \varepsilon/\rho_0}{\ln(1-b)}$. The

Card 1/3

APPROVED FOR RELEASE: Tuesday, August 01, 2000 CIA-RDP86-00513R0014443

"APPROVED FOR RELEASE: Tuesday, August 01, 2000 CIA-RDP86-00513R001444

L 31111-65

ACCESSION NR: AT5000970

formula shows that the number of searching steps is proportional to the square root of the problem complexity $\sqrt{n}$ and the logarithm of the required accuracy $\ln(\varepsilon/\rho_0)$. The total average number of arithmetical operations required is: $N_s = -A_s n^2 \sqrt{n} \ln \varepsilon/\rho_0$, where A_s is a constant. A comparison of the three methods yields a diagram (see Enclosure 1) where each zone shows the maximum convergence (minimum number of arithmetical operations) inherent to the method. Thus, the random-search method may be recommended for problems involving many unknowns and a moderate accuracy; the same problems with a high accuracy may be better solved by the Gaussian method; the Monte-Carlo method has an advantage in solving relatively simple problems with a low accuracy. Orig. art. has: 5 figures and 45 formulas.

ASSOCIATION: Institut elektroniki i vychislitel'noy tekhniki AN LatSSR (Institute of Electronics and Computer Technology, AN LatSSR)

SUBMITTED: 00 ENCL: 01 SUB CODE: MA, DP

NO REF SOV: 008 OTHER: 000

Card 2/3

APPROVED FOR RELEASE: Tuesday, August 01, 2000 CIA-RDP86-00513R0014443

"APPROVED FOR RELEASE: Tuesday, August 01, 2000 CIA-RDP86-00513R001444

L 31111-65

ACCESSION NR: AT5000970

ENCLOSURE: 1

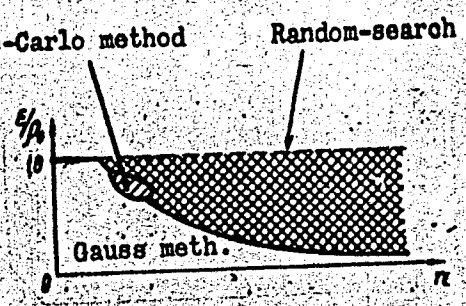

Accuracy vs. complexity of solution of a higher-order algebraic equations by three methods

Card 3/3

APPROVED FOR RELEASE: Tuesday, August 01, 2000 CIA-RDP86-00513R0014443

"APPROVED FOR RELEASE: Tuesday, August 01, 2000 CIA-RDP86-00513R001444

L 31110-65 EWT(d)/EPF(n)-2/EWP(1) Po-4/Pq-4/Pg-4/Pae-2/Pu-4/Pk-4/Pl-4
IJP(c) WW/BC

ACCESSION NR: AT5000971 S/2690/64/006/000/0049/0058

53
52
B+1

AUTHOR: Rastrigin, L. A.; Yanson, B. A.

TITLE: Comparing the efficiency of the gradient method with that of the random-search method in the vicinity of target

SOURCE: AN LatSSR. Institut elektroniki i vychislitel'noy tekhniki. Trudy, v. 6. Riga, 1964. Avtomatika i vychislitel'naya tekhnika (Automation and computer technology), no. 7, 49-58

TOPIC TAGS: multiparameter system, automatic control, automatic control design, automatic control system, automatic control theory

ABSTRACT: An earlier author's article (Izv. AN Latv. SSR, Physico-Technical Ser., 1964, no. 2) showed that, in the optimization of multiparameter systems, the convergence of the random-search method may exceed that of the gradient method. The present article presents a more rigorous comparison of the two

Card 1/2

APPROVED FOR RELEASE: Tuesday, August 01, 2000 CIA-RDP86-00513R0014443

"APPROVED FOR RELEASE: Tuesday, August 01, 2000 CIA-RDP86-00513R001444

L 31110-65

ACCESSION NR: AT5000971

methods for the optimization case when the system is in the vicinity of the target. Applicability of the gradient method to the optimization of systems having a nonlinear quality function is investigated; two cases are considered: (a) when one of the coordinate axes passes through the target and (b) the coordinate axes are equally inclined with respect to the direction to the target. It is found that the random-search method, in the extremal control of multiparameter systems, is more efficient than the gradient method if the range to the target exceeds a certain value given by the chart in fig. 7. In the immediate neighborhood of the target, the gradient method converges more rapidly than the random-search version considered in the article. Orig. art. has: 7 figures and 21 formulas.

ASSOCIATION: Institut elektroniki i vychislitel'noy tekhniki AN LatSSR (Institute of Electronics and Computer Technology, AN LatSSR)

SUBMITTED: 00 ENCL: 00 SUB CODE: DP, MA

NO REF SOV: 002 OTHER: 000

Card 2/2

APPROVED FOR RELEASE: Tuesday, August 01, 2000 CIA-RDP86-00513R0014443

"APPROVED FOR RELEASE: Tuesday, August 01, 2000 CIA-RDP86-00513R001444

KASTRIOTIS, Leonard Andreyevich; SHKLENNIK, Ch., red.

[Random search in problems of the optimization of multi-parametric systems] Sluchainyi poisk v zadachakh optimizatsii mnogoparametricheskikh sistem. Riga, Izd-vo "Zinatne," 1965. 211 p. (MIRA 18:6)

APPROVED FOR RELEASE: Tuesday, August 01, 2000 CIA-RDP86-00513R0014443

"APPROVED FOR RELEASE: Tuesday, August 01, 2000 CIA-RDP86-00513R001444

L 8201-66 EWT(d)/EWP(v)/EWP(k)/EWP(h)/EWP(1)

ACC NR: AP5023114 SOURCE CODE: UR/0103/65/026/009/1546/1552

AUTHOR: Gurin, L. S. (Moscow, Riga); Rastrigin, L. A. (Moscow, Riga)

ORG: none

51
B

TITLE: Convergence of the random search method when noise is involved

SOURCE: Avtomatika i telemekhanika, v. 26, no. 9, 1965, 1546-1552

TOPIC TAGS: automatic control, automatic control design, automatic control system, automatic control theory 14

ABSTRACT: A linear form of the performance function of an optimized system is considered, and the rate of convergence of the random-search method is compared with that of the gradient method. The convergence of the search process is largely determined by this "desired-signal-to-noise ratio": $\delta = \frac{|\mathrm{grad}\, Q|\varepsilon}{\sigma\sqrt{2}}$, where Q(x) is

Card 1/2

UDC: 621.391.161

APPROVED FOR RELEASE: Tuesday, August 01, 2000 CIA-RDP86-00513R0014443

"APPROVED FOR RELEASE: Tuesday, August 01, 2000 CIA-RDP86-00513R001444

L 8201-66

ACC NR: AP5023114

the performance function, g is the dither in the parameter space, and σ is the dispersion. Formulas describing the algorithms for both methods are developed. It is found that, in the random-search method, the search loss is proportional to (a) the noise level and (b) the number of variables of the optimized system. The random-search method is found to be more efficient than the gradient method for 6 variables or less. Orig. art. has: 2 figures and 41 formulas.

SUB CODE: 09, 13 / SUBM DATE: 11Aug64 / ORIG REF: 001 / OTH REF: 001

Card 2/2

APPROVED FOR RELEASE: Tuesday, August 01, 2000 CIA-RDP86-00513R0014443

"APPROVED FOR RELEASE: Tuesday, August 01, 2000 CIA-RDP86-00513R001444

L 13960-66 EWT(m)/EWP(w)/ETC(m)-6 IJP(c) WW/EM/DJ/GS
ACC NR: AT6001703 (A) SOURCE CODE: UR/0000/65/...

67
63+1

AUTHOR: Rastrigin, L. A.

ORG: none

TITLE: Application of the method of self-adaptive models in automatic rotor balancing

SOURCE: Uravnoveshivaniye mashin i priborov (Balancing of machinery and instruments). Moscow, Izd-vo "Mashinostroyeniye", 1965, 45-51

TOPIC TAGS: mechanical vibration, shaft vibration, rotor balancing, dynamic system, electric rotating equipment part, self adaptive control

ABSTRACT: In the author's previous work (Avtomaticheskoye ustraneniye vibratsiy. Vestnik mashinostroyeniya, 1962, No. 5) the problem of automatic rotor balancing was posed as an extremum control problem; in the present work, the application of self-adaptive models to decrease of balancing time is discussed. In this method, proposed by M. Margolis and S. T. Leondes (O teorii samonastraivayushchikhsya sistem regulirovaniya. Trudy 1-go kongressa IFAK. M., Izd. AN SSSR, t. 2, 1961), the mechanics of the rotor motion are studied to predict optimum balancing weight positioning. The operator must solve three problems in order to apply his knowledge of the rotor dynamics as shown schematically in Fig. 1. First, he must formulate a mathematical model of the rotor and the sensing transducers. In general, this takes the form of a set of differential equations

$$F(p, X, Y, \Phi, M) = 0$$

Card 1/3

(where ... positi... stress ... constan...

which can ... model (sw... function

Card 2/3

...sional ...ude, phase, and ...s to determine the

... $Y_M)$

...e Fig. 1) with an optimizer feeding back to the ...ird step is to find an X* which will minimize a given

$$Q_s = Q_s(Y)$$

APPROVED FOR RELEASE: Tuesday, August 01, 2000 CIA-RDP86-00513R00...

"APPROVED FOR RELEASE: Tuesday, August 01, 2000 CIA-RDP86-00513R001444

L 13960-66

ACC NR: AT6001703

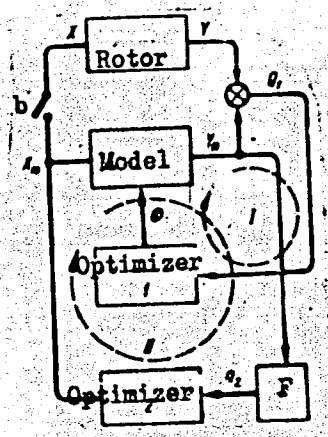

Fig. 1. Schematic of automatic rotor balancing system.

(where X = n-dimensional position vector of controlled unbalances, ϕ = m-dimensional position vector of uncontrolled unbalances, M = mass vector, Y = amplitude, phase, and stress vector of the resulting rotor motion). The second step is to determine the constants of the mathematical model so as to minimize

$$Q_1 = (Y - Y_M)^2$$

which can be accomplished by loop I (see Fig. 1) with an optimizer feeding back to the model (switch B closed). The third step is to find an X* which will minimize a given function

$$Q_2 = Q_2(Y)$$

Card 2/3

APPROVED FOR RELEASE: Tuesday, August 01, 2000 CIA-RDP86-00513R0014443

"APPROVED FOR RELEASE: Tuesday, August 01, 2000 CIA-RDP86-00513R001444

ACC NR: AT6001703

characterizing the rotor vibration. This is accomplished by loop II (see Fig. 1) (with switch B open) which has a functional block F (to generate Q_2) and an optimizer to find the best X*. The use of this method is demonstrated by a simple example (rigid shaft on rigid supports). Orig. art. has: 4 figures and 8 formulas.

SUB CODE: 13/ SUBM DATE: 04Sep65/ ORIG REF: 005

Card 3/3

APPROVED FOR RELEASE: Tuesday, August 01, 2000 CIA-RDP86-00513R0014443

"APPROVED FOR RELEASE: Tuesday, August 01, 2000 CIA-RDP86-00513R001444

L 27205-66 EWT(d)/EWP(1) IJP(c) BC/JXT(CZ)

ACC NR: AT5028442 SOURCE CODE: UR/2690/65/009/000/0005/0014

AUTHOR: Rastrigin, L. A.

77

B+1

ORG: none

TITLE: Effect of target wandering on the behavior of an extremal-control system

SOURCE: AN LatSSR. Institut elektroniki i vychislitel'noy tekhniki. Trudy. v. 9, 1965. Avtomatika i vychislitel'naya tekhnika, 5-14

TOPIC TAGS: automatic control, automatic control system, automatic control theory, target tracking, detection system

ABSTRACT: The problem of extremal control of a multiparameter system, under the conditions of random wandering of its characteristics, is considered. Any extremal control tends to maintain at minimum a certain quality function of the system which may have this form: $Q(x_1, x_2, \ldots, x_n) = r = |X - X^\circ| = \left[\sum_{i=1}^{n} (x_i - x_i^\circ)^2\right]^{1/2}$, where $X = (x_1, \ldots, x_n)$ is the vector of controllable parameters and $X^\circ = (x_1^\circ, \ldots, x_n^\circ)$ is the vector of uncontrollable parameters. It is assumed that the target position varies

Card 1/2 UDC: 62-506.1

APPROVED FOR RELEASE: Tuesday, August 01, 2000 CIA-RDP86-00513R0014443

"APPROVED FOR RELEASE: Tuesday, August 01, 2000 CIA-RDP86-00513R001444

L 27205-66

ACC NR: AT5028442

0

stepwise in equal time intervals, the vector of displacement is random, and its modulus q is constant. It is proven that a randomly wandering point, on the average, always goes away from any fixed point. It is found that the optimal value of the search step corresponds to the intersection at one point of three curves: the envelope, the average velocity of drifting away of the target, and the average velocity of system-state identification. Thus, for n = 3, the optimal search step will be: $a^* = \frac{r^*}{1,5} = 1,61q$, where r* is the radius of a stationary orbit. Orig. art. has: 8 figures and 15 formulas.

SUB CODE: 17,13/ SUBM DATE: none / ORIG REF: 003

Card 2/2 CC

APPROVED FOR RELEASE: Tuesday, August 01, 2000 CIA-RDP86-00513R0014443

"APPROVED FOR RELEASE: Tuesday, August 01, 2000 CIA-RDP86-00513R001444

L 06984-67 EWT(d)/EWP(v)/EWP(k)/EWP(h)/EWP(1)
ACC NR: AT6018279 SOURCE CODE: UR/3192/65/000/010/0055/0076

AUTHOR: Rastrigin, L. A.; Ripa, K. K.

ORG: none

29
B+1

TITLE: Continuous self-learning algorithm used in multiparameter optimization by the random-search method

SOURCE: AN LatSSR. Institut elektroniki i vychislitel'noy tekhniki. Avtomatika i vychislitel'naya tekhnika, no. 10, 1965, 55-76

TOPIC TAGS: optimization, automatic control R and D, extremal automatic control, algorithm

14

ABSTRACT: This is a further development of Rastrigin's earlier work (Avtomatika i vych. tekhnika, no. 6, 1963) in which the learning, i.e., the rearrangement of probabilistic characteristics of a search, was performed along all coordinates independently; this resulted in a low convergence of the "discrete" searching process. The present article proposes a "continuous" self-learning algorithm which overcomes the above difficulty. The latter algorithm is given by:

Card 1/2 UDC: 62-505.72

APPROVED FOR RELEASE: Tuesday, August 01, 2000 CIA-RDP86-00513R0014443

"APPROVED FOR RELEASE: Tuesday, August 01, 2000 CIA-RDP86-00513R001444

L 06984-67

ACC NR: AT6018279

$W_{N+1} = W_N - \delta \Delta Q_N \Delta X_N$, where W is the memory vector, δ is the rate-of-learning parameter, ΔQ_N is the quality-function increment, ΔX_N is the system displacement after the N-th move. The algorithm applies both incentives and penalties. It is proven that the direction of the memory vector generally approaches the reverse gradient direction if the move directions are selected with equal probabilities; however, the search-move directions are selected not with equal probabilities but with a preference toward the memory-vector direction. An experimental comparison of the above method with the gradient method and the steepest descent method, under noise conditions, exhibits the advantages of the continuous self-learning method. Orig. art. has: 15 figures and 25 formulas.

SUB CODE: 12,13/ SUBM DATE: none / ORIG REF: 002

Card 2/2

APPROVED FOR RELEASE: Tuesday, August 01, 2000 CIA-RDP86-00513R0014443

"APPROVED FOR RELEASE: Tuesday, August 01, 2000 CIA-RDP86-00513R001444

L 06991-67 EWT(d) IJP(c)
ACC NR: AT6018281

SOURCE CODE: UR/3192/65/000/010/0103/0118

AUTHOR: Rastrigin, L. A.

ORG: none

TITLE: Some statistical algorithms of the global search

SOURCE: AN LatSSR. Institut elektroniki i vychislitel'noy tekhniki. Avtomatika i vychislitel'naya tekhnika, no. 10, 1965, 103-118

TOPIC TAGS: optimization, automatic control R and D, extremal automatic control, algorithm

ABSTRACT: The well-known direct search optimization procedure is set forth. Initially, m random trials are performed; each trial solution is compared with the best obtained up to that time, and there is a strategy for determining (as a function of earlier results) what the next trial solution will be. As a result of a sequential examination of trial solutions, the global (n-parameter) optimum is approached. The following particular search algorithms are considered: (1) A

Card 1/2

UDC: 62-505.72

APPROVED FOR RELEASE: Tuesday, August 01, 2000 CIA-RDP86-00513R0014443

"APPROVED FOR RELEASE: Tuesday, August 01, 2000 CIA-RDP86-00513R001444

L 06991-67

ACC NR: AT6018281

discrete algorithm; after only 7 trial moves, a ravine is reached for this function: $Q=\frac{1}{n}\sum_{i=1}^{n} x_i$, where $n = 10$, $m = 5$, and the fastest improvement vector $W_0 = 1/\sqrt{n}$ (1, 1, ..., 1); (2) A directing-sphere algorithm; this is described by the author in AT6018279; (3) A directing-cone algorithm which is treated as a particular case of "2." Orig. art. has: 8 figures and 24 formulas.

SUB CODE: 12,13/ SUBM DATE: none / ORIG REF: 013 / OTH REF: 001

Card 2/2

APPROVED FOR RELEASE: Tuesday, August 01, 2000 CIA-RDP86-00513R0014443

"APPROVED FOR RELEASE: Tuesday, August 01, 2000 CIA-RDP86-00513R001444

L 06975-67 EWT(d)/EWP(v)/EWP(k)/EWP(h)/EWP(1)

ACC NR: AT6018282 SOURCE CODE: UR/3192/65/000/010/0131/0144

AUTHOR: Rastrigin, L. A.

ORG: none

36
35
B+1

TITLE: Hunting of a multiparameter system being optimized under noise conditions

SOURCE: AN LatSSR. Institut elektroniki i vychislitel'noy tekhniki. Avtomatika i vychislitel'naya tekhnika, no. 10, 1965, 131-144

TOPIC TAGS: optimization, automatic control R and D, Markov process, algorithm

ABSTRACT: The behavior of a multiparameter system optimized by the random direct search method and subjected to noise is analyzed. Its hunting is described by a Markov process with discrete time and infinite number of states. A method is suggested for approximate determination of the distribution density of the system locations with respect to its objective in the course of hunting. The noise causes a random hunting of the system about its objective, and a spatial stationary

Card 1/2

UDC: 62-505:519.25

APPROVED FOR RELEASE: Tuesday, August 01, 2000 CIA-RDP86-00513R0014443

"APPROVED FOR RELEASE: Tuesday, August 01, 2000 CIA-RDP86-00513R001444

L 06975-67

ACC NR: AT6018282

distribution of the system positions with respect to the objective will be established as a result; the minimal density of this distribution will coincide with the objective. A local distribution which characterizes the migration of the system toward the objective upon a single trial move is found. Three numerical examples illustrate the effect of noise and of the search algorithm on the local distribution: the mathematical expectation of this distribution increases with noise. The integral distribution is approximated by a χ-distribution of the n-th degree, where n is the number of independent variables. The validity of this approximation is proven by a 6000-move digital-computer simulation of the search procedure for a 3-dimensional system. "All calculations in this article were made by M. R. Yukha, to whom the author is deeply grateful." Orig. art. has: 7 figures and 33 formulas.

SUB CODE: 12,13/ SUBM DATE: none / ORIG REF: 005

Card 2/2

APPROVED FOR RELEASE: Tuesday, August 01, 2000 CIA-RDP86-00513R0014443

"APPROVED FOR RELEASE: Tuesday, August 01, 2000 CIA-RDP86-00513R001444

EWP(v)/EWP(k)/EWP(h)/EWP(1)

ACC NR: AT6018285 SOURCE CODE: UR/3192/65/000/010/0169/0188

AUTHOR: Rastrigin, L. A.; Sytenko, L. V.

ORG: none

23
Bt/

TITLE: Relay-type multichannel optimizer 14 operating on random-search algorithms

SOURCE: AN LatSSR. Institut elektroniki i vychislitel'noy tekhniki. Avtomatika i vychislitel'naya tekhnika, no. 10, 1965, 169-188

TOPIC TAGS: optimization, automatic control R and D

ABSTRACT: The multichannel optimizer described in this article is intended for developing simulators of industrial processes (by a learning-model method) and for determining optimal parameters of these simulators; the optimizer has a low search frequency (up to a few dozen cps). Designed for operation with inertial systems, the optimizer comprises (see figure) a random-impulse generator (RIG) which produces heteropolar impulses at a frequency set by a search-frequency reference generator (SFRG). The impulses are applied to an integrating unit (1/p) which is represented either by the corresponding unit of the simulator or by a reversible motor. A sign

Card 1/2

UDC: 62-505:519.27

APPROVED FOR RELEASE: Tuesday, August 01, 2000 CIA-RDP86-00513R0014443

"APPROVED FOR RELEASE: Tuesday, August 01, 2000 CIA-RDP86-00513R001444

ACC NR: AT6018285

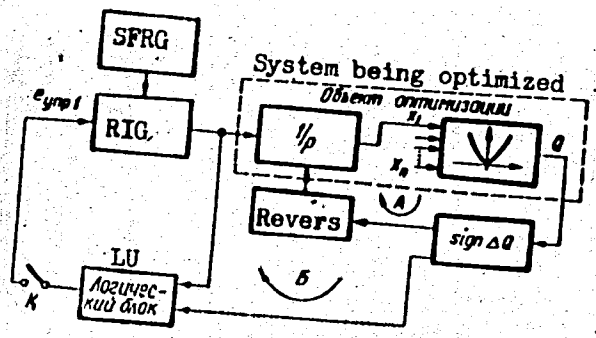

One-channel optimizer

ΔQ unit controls the motor reversal which restores the last base point in case of an unsuccessful move. Each channel has a self-learning characteristic: the probability characteristic of the random-impulse generator, which determines the direction of moves, is controlled by a logic unit (LU). A recurrent formula describes the algorithm for returning the random generator. Principal circuits of all above units are described. An experimental verification included a study of the optimization process in a 2-parameter inertialess plant with a nonlinear objective function by means of an electronic nonlinear simulator (Soviet-made MN-7). The optimizer is recommended for systems with any number of variables and a time constant of 2—100 sec. Orig. art. has: 13 figures and 8 formulas.

SUB CODE: 12, 09 / SUBM DATE: none / ORIG REF: 018

Card 2/2 LC

APPROVED FOR RELEASE: Tuesday, August 01, 2000 CIA-RDP86-00513R0014443

"APPROVED FOR RELEASE: Tuesday, August 01, 2000 CIA-RDP86-00513R001444

L 00202-67
ACC NR: AT6022695

SOURCE CODE: UR/0000/66/000/000/0280/0290

AUTHOR: Rastrigin, L. A.; Ripa, K. K.; Sytenko, L. V.

ORG: none

TITLE: Automatic optimizers operating on the principle of statistical search with self-teaching

SOURCE: Moscow. Institut avtomatiki i telemekhaniki. Samoobuchayushchiyesya avtomaticheskiye sistemy (Self-instructing automatic systems). Moscow, Izd-vo Nauka, 1966, 280-290

TOPIC TAGS: optimal automatic control, self adaptive control, learning mechanism

ABSTRACT: Self-teaching in the extremal control of multiparameter systems by the statistical search method involves changing the probability characteristics of random generators such that the probability of favorable steps increases and the probability of unfavorable steps decreases. The optimizer with statistical search operates in such a manner that these probability increases occur simultaneously at each parameter. A block diagram of such a system is shown. The basic element of the optimizing channel is the random generator which generates random pulse sequences. A pulse at the generator output produces a positive change in the parameter to be optimized and the absence of a pulse, a negative change. A new method of self-teaching by which it is possible

Card 1/2

APPROVED FOR RELEASE: Tuesday, August 01, 2000 CIA-RDP86-00513R0014443

"APPROVED FOR RELEASE: Tuesday, August 01, 2000 CIA-RDP86-00513R001444

ACC NR: AP6022695

to change the probability characteristics without destroying information previously stored in the memory system is also introduced. The method was tested in an optimization problem run on the M-3 computer. It is shown that the statistical search method improves the convergence of the search and stability of the system. It is noted that no equipment has been yet built incorporating this self-teaching principle. Orig. art. has: 14 figures, 12 formulas. [14]

SUB CODE: 13/ SUBM DATE: 02Mar66/ ORIG REF: 002

Card 2/2

APPROVED FOR RELEASE: Tuesday, August 01, 2000 CIA-RDP86-00513R0014443

"APPROVED FOR RELEASE: Tuesday, August 01, 2000 CIA-RDP86-00513R001444

GURIN, L.S.; RASTRIGIN, L.A.

Convergence of a random search method under noise conditions. Avtom. i telem. 26 no.9:1546-1552 S '65.

(MIRA 18:10)

APPROVED FOR RELEASE: Tuesday, August 01, 2000 CIA-RDP86-00513R0014443

"APPROVED FOR RELEASE: Tuesday, August 01, 2000 CIA-RDP86-00513R001444

L 25943-66 EWT(d)/T IJP(c)

ACC NR: AM5027771 Monograph UR/ 53

B+1

Rastrigin, Leonard Andreyevich

Random searching in problems of optimization of multiparametric systems (Sluchaynyy poisk v zadachakh optimizatsii mnogoparametricheskikh sistem) Riga, Izd-vo "Zinatne", 1965. 211 p. illus., biblio. (At head of title: Akademiya nauk Latvisyskoy ESR. Institut elektroniki i vychislitel'noy tekhniki). 3,000 copies printed.

TOPIC TAGS: random process, random walk problem, self adaptive control, self organizing system, optimal control

PURPOSE AND COVERAGE: The book is devoted to an exposition of the random search method for use in self-organizing systems, as applied to multiparameter automatic optimization systems in which the search is intended to obtain the information required to control a given object. Various step by step, continuous, and self-teaching algorithms are considered and optimization based on the random search procedure is analyzed in detail. The book is designed for large groups of engineers working in the field of self-adaptive systems. Author thanks Professor D. B. Yudin, L. S. Gurin, and A. N. Sklyarevich for much valuable advice and for remarks made in the manuscript stage.

TABLE OF CONTENTS [abridged]:

Foreword - - 3
Introduction - - 5
Ch. I. Algorithms of random search - - 28

Card 1/2

APPROVED FOR RELEASE: Tuesday, August 01, 2000 CIA-RDP86-00513R0014443

"APPROVED FOR RELEASE: Tuesday, August 01, 2000 CIA-RDP86-00513R001444

L 25943-66

ACC NR: AM5027771 D

Ch. II. Step by step optimization methods - - 64
Ch. III. Optimization of continuous noninertial systems - - 95
Ch. IV. Self-learning in the process of optimization by the random search method - - 126
Ch. V. Optimizer operating by the random search method - - 154
Ch. VI. Some applications of random search methods - - 179
Appendix - - 204
Literature - - 207

SUB CODE: 13, 14/ SUBM DATE: 23Apr65/ ORIG REF: 059/ OTH REF: 007

Card 2/2 FW

APPROVED FOR RELEASE: Tuesday, August 01, 2000 CIA-RDP86-00513R0014443

"APPROVED FOR RELEASE: Tuesday, August 01, 2000 CIA-RDP86-00513R001444

KAZANSKIY, V.I., prof.; BOGDANOV, A.V.; KHARITONOV, L.G., kand. med. nauk; RASTRIGIN, N.N., kand. med. nauk

Causes of fatal outcome following radical operations for cancer of the upper section of the stomach involving the esophagus. Khirurgiia 40 no.2:93-98 F '64. (MIRA 17:7)

1. 3-ya kafedra khirurgii (zav. - prof. V.I. Kazanskiy) TSentral'nogo instituta usovershenstvovaniya vrachey na baze TSentral'noy klinicheskoy bol'nitsy Ministerstva putey soobshcheniya, Moskva.

APPROVED FOR RELEASE: Tuesday, August 01, 2000 CIA-RDP86-00513R0014443

"APPROVED FOR RELEASE: Tuesday, August 01, 2000 CIA-RDP86-00513R001444

ACCESSION NR: AP3006765 S/0190/63/005/009/1398/1403

AUTHORS: Aynbinder, S. B.; Rastrigina, E. F.

TITLE: Flow and cohesion of spatially cross-linked polymers

SOURCE: Vysokomolekulyarnyye soyedineniya, v. 5, no. 9, 1963, 1398-1403

TOPIC TAGS: polymer materials, polymer flow, polymer cohesion, spatially structured polymers, Ag 4 plastic, K 17 2 carbolite, M 1 monolith, polystrene, aminoplastic

ABSTRACT: It is commonly accepted that spatially cross-linked polymers do not flow during deformation. However V. A. Kargin, T. I. Sogolova, G. L. Slonimskiy, and Ye. V. Reztsova (Zh. fiz. khimii 30, 1903, 1956) have shown that a certain type of "chemical flow" does occur under a complex stress caused by nonuniform overall compression exerted on an object. Because some machine parts operate under such conditions, a study was undertaken on the flow and cohesion processes in a number of polymer materials, and the article presents the results of this study. The materials tested were: AG-4 plastic, K-17-2 carbolite, M-1 monolith, polystyrene, and aminoplastic. The experimental results showed that plasticity of spatially

Card 1/2

APPROVED FOR RELEASE: Tuesday, August 01, 2000 CIA-RDP86-00513R0014443

"APPROVED FOR RELEASE: Tuesday, August 01, 2000 CIA-RDP86-00513R001444

ACCESSION NR: AP3006765

cross-linked polymers increased sharply under complex stresses, that the strengths of the tested materials diminished due to the appearance of internal defects during deformation, and that the increase of deformation temperature led to the increase in plasticity. Two simultaneously deformed pieces adhered to one another, and the strength of adhesion was about equal to that of a whole sample. The "chemical" flow of spatially cross-linked materials was explained by the healing of defects under the influence of all-sided compression. "K. I. Alksne participated in the experimental work." Orig. art. has: 5 figures.

ASSOCIATION: Institut avtomatiki i mekhaniki AN Latviyskoy SSR (Institute of Automation and Mechanics AN Latvian SSR)

SUBMITTED: 12Mar62 DATE ACQ: 30Sep63 ENCL: 00

SUB CODE: PH, CH NO REF SOV: 006 OTHER: 000

Card 2/2

APPROVED FOR RELEASE: Tuesday, August 01, 2000 CIA-RDP86-00513R0014443

"APPROVED FOR RELEASE: Tuesday, August 01, 2000 CIA-RDP86-00513R001444

AYNBINDER, S.B., kand. tekhn. nauk; RASTRIGINA, E.F., kand. tekhn. nauk

Cold spot welding of thin sheet metal. Svar. proizv. no.7: 20-21 Jl '63. (MIRA 17:2)

1. Institut avtomatiki i mekhaniki AN Latviyskoy SSR.

APPROVED FOR RELEASE: Tuesday, August 01, 2000 CIA-RDP86-00513R0014443

"APPROVED FOR RELEASE: Tuesday, August 01, 2000 CIA-RDP86-00513R001444

AYHINDER, S.B.; GLUSE, R.K.; LOGINOVA, A.Ya.; [illegible], A.S.; RASTRIGINA, E.F.

Basis of the theory of pressure welding. Avtom. svar. 17 no.5:21-27 My '64. (MIRA 17:11)

1. Institut mashinovedeniya AN Latviyskoy SSR.

APPROVED FOR RELEASE: Tuesday, August 01, 2000 CIA-RDP86-00513R0014443

"APPROVED FOR RELEASE: Tuesday, August 01, 2000 CIA-RDP86-00513R001444

L 26105-65 EWP(e)/EWT(m)/EWP(v)/T/EPR/EWP(t)/EWP(k)/EWP(b) Pf-4/Ps-4 IJP(c)
ACCESSION NR: AP4047015 JD/HM S/0135/64/000/010/0028/0031

AUTHOR: Aynbinder, S.B. (Candidate of technical sciences); Loginova, A. Ya. (Engineer); Makarov, V.A. (Engineer); Rastrigina, E.F. (Candidate of technical sciences)

31
30
B

TITLE: Cold welding of metals using solid finely divided particles

16

SOURCE: Svarochnoye proizvodstvo, no. 10, 1964, 28-31

TOPIC TAGS: cold welding, spot welding, metal treatment, metal impurity, metal powder, aluminum base alloy, aluminum welding, copper welding

ABSTRACT: This article presents the results of investigations concerning the development of a method of cold spot welding which does not require special surface treatment of the metal and which is relatively insensitive to impurities. A layer of iron, sand, emery, nickel, or aluminum powder was applied to the surface of aluminum and copper specimens 3X30X80 mm in dimensions. It was determined from these tests that the powder must be harder than the specimens being welded, and that powder from reduced iron produced the best results. The effect of the particle size of the powders was also investigated. As shown in Fig. 1 of the Enclosure, increasing the dimensions of the powder particles increases the strength of the welded spot to a certain limit, after which subsequent en-

Card 1/5

APPROVED FOR RELEASE: Tuesday, August 01, 2000 CIA-RDP86-00513R0014443

"APPROVED FOR RELEASE: Tuesday, August 01, 2000 CIA-RDP86-00513R001444

L 26105-65

ACCESSION NR: AP4047015

largement of the particle size produces no increase in strength. As shown in Fig. 2 of the Enclosure, however, the strength of a welded spot is less when coarse powder is used. The effect of the density of the powder layer was investigated on aluminum specimens for iron powder 100 - 160 μ in diameter. The specimens were also tested for sensitivity to impurities. As shown in Fig. 3 of the Enclosure, the presence of a lubricant on the surface somewhat reduced the strength of the weld. The authors concluded that the dimensions of the powder should be no less than 150 - 200 microns; the density of the layer of powder should be approximately 0.5 mm; and the relative depth of the punch impressions should be 70 - 75% for aluminum and 85-87% for copper (not taking into account the density of the layer of powder). Orig. art. has: 1 table and 7 figures.

ASSOCIATION: Institut avtomatiki i mekhaniki AN Latviyskoy SSR (Automation and mechanics institute, AN LatSSR)

SUBMITTED: 00 ENCL: 03 SUB CODE: MM

NO REF SOV: 005 OTHER: 001

Card 2/5

APPROVED FOR RELEASE: Tuesday, August 01, 2000 CIA-RDP86-00513R0014443

"APPROVED FOR RELEASE: Tuesday, August 01, 2000 CIA-RDP86-00513R001444

L 24701-66 EWP(e)/EWT(m)/EWP(t)/EWP(k) IJP(c) JD

ACC NR: AP6011346 SOURCE CODE: UR/0226/66/000/003/0027/0036

AUTHOR: Andreyeva, N. G.; Rastrigina, E. F.

ORG: Institute of Mechanics of Polymers, AN LatSSR (Institut mekhaniki polimerov AN LatSSR)

TITLE: Mechanism of metal-contact formation in sintered aluminum powder (SAP)-type alloys

SOURCE: Poroshkovaya metallurgiya, no. 3, 1966, 27-36

TOPIC TAGS: sintered aluminum powder, metal film, powder metal, plastic deformation, metal powder, metal contact

ABSTRACT: This research is devoted to a study of the mechanism of the breakdown of films and the origin of the metal contact in the case of pressing of plastic metal powders with a relatively hard film on the particles. Experiments on models have shown that the breakdown on the hard film occurs during the deformations of the particles as a result of spreading of the metal particles, i.e., an increase in their surfaces. With the simultaneous plastic deformation of the contacting areas of the particles, a symmetrical breakdown of the film occurs, forming symmetrical cracks along which bonding bridges arise between the particles. The strength of cohesion depends on the area of the

Card 1/2

APPROVED FOR RELEASE: Tuesday, August 01, 2000 CIA-RDP86-00513R0014443

"APPROVED FOR RELEASE: Tuesday, August 01, 2000 CIA-RDP86-00513R001444

L 24701-66

ACC NR: AP6011346

symmetrical cracks. The theory of cohesion of metals in joint deformation developed in earlier research (S. B. Aynbinder, E. F. Klokova, ZhTF, XXV, v. 13, 1955, 2356; S. B. Aynbinder, E. F. Klokova, Sb. "Sukhoye treniye", Izd-vo AN LSSR, 1961, Riga; E. F. Klokova, Izv. AN LSSR, No. 11, 1960, 49) is applicable to the pressing conditions of metal powders. The authors express their deep gratitude to S. B. Aynbinder for his participation and discussion of problems pertaining to this article. Orig. art. has: 6 figures and 2 tables. [Based on author's abstract] [AM]

SUB CODE: 11/ SUBM DATE: 13May65/ ORIG REF: 007/ OTH REF: 006/

Card 2/2 MJS

APPROVED FOR RELEASE: Tuesday, August 01, 2000 CIA-RDP86-00513R0014443

"APPROVED FOR RELEASE: Tuesday, August 01, 2000 CIA-RDP86-00513R001444

L 46954-66 EWP(e)/EWT(m)/EWP(t)/ETI/EWP(k) IJP(c) JD/JH

ACC NR: AT6024929 (A,N) SOURCE CODE: UR/2981/66/000/004/0192/0201

AUTHOR: Aynbinder, S. B.; Andreyeva, N. G.; Rastrigina, E. F.

ORG: none

TITLE: Preparation of finely divided aluminum powder by electroerosion

SOURCE: Alyuminiyevyye splavy, no. 4, 1966. Zharoprochnyye i vysokoprochnyye splavy (Heat resistant and high-strength alloys), 192-201

TOPIC TAGS: electroerosion, aluminum powder

ABSTRACT: The object of the work was to obtain aluminum powder of maximum dispersity and minimum oxide content. To this end, use was made of one of the methods of electroerosion, viz., spraying in a high-frequency spark discharge in liquid media. Distilled water, ethanol, CO_2-saturated ethanol, benzene, and glycerin were tested as the dispersion media at 0, 20, and 3-40°C. The maximum aluminum content of the powder was 82%. Ethanol was found to be the best dispersion medium. The temperature of the medium and the time spent by the particles in the discharge zone determine the degree of oxidation of the powder. The content of carbon in the powder obtained from ethanol was 3%, that of hydrogen, 1.5%, and that of nitrogen, 0.5%. The bulk of the particles formed as a result of condensation processes, and their size ranged from 0.01 to 0.2 μ. Approximately 20% of the particles formed by dispersion processes, and their size was

Card 1/2

Card 2/2

APPROVED FOR RELEASE: Tuesday, August 01, 2000 CIA-RDP86-00513R0014443

"APPROVED FOR RELEASE: Tuesday, August 01, 2000 CIA-RDP86-00513R001444

L 46964-66

ACC NR: AT6024929

0.2 to 15 μ. Orig. art. has: 5 figures and 1 table.

SUB CODE: 11/ SUBM DATE: none/ ORIG REF: 010/ OTH REF: 001

Card 2/2 mt

APPROVED FOR RELEASE: Tuesday, August 01, 2000 CIA-RDP86-00513R0014443

"APPROVED FOR RELEASE: Tuesday, August 01, 2000 CIA-RDP86-00513R001444

ACC NR: AT6024931 (A,N) SOURCE CODE: UR/2981/66/000/004/0208/0213

AUTHOR: Aynbinder, S. B.; Loginova, A. Ya.; Rastrigina, E. F.

ORG: none

TITLE: Preparation of a surface layer similar to SAP

SOURCE: Alyuminiyevyye splavy, no. 4, 1966. Zharoprochnyye i vysokoprochnyye splavy (Heat resistant and high-strength alloys), 208-213

TOPIC TAGS: sintered aluminum powder, metal surface, surface finishing

ABSTRACT: A mechanism is proposed to account for the formation of a layer of SAP (sintered aluminum powder) on the surface of aluminum during its treatment with a rotating wire brush. The properties of this layer (hardness, chemical composition, oxidation resistance at high temperatures) were studied. It is shown that the hardness of the surface layer increases from 145 kg/mm^2 to 200 kg/mm^2 as the diameter of the brush wire decreases from 0.4 to 0.12 mm. It is also shown that the increase in the hardness of the layer with decreasing wire diameter is in accord with the increased oxide content of the layer. It is pointed out that by treating the surface of metals with a rotating wire brush and suitably selecting the brush material, one can alloy the surface layer of some metals. Thus, for example, a 1-min treatment of nickel and gold with a brush having steel wires 0.3 mm in diameter and rotating at 28 m/sec produces a layer containing 5-10% Fe. No iron is observed on aluminum and very little is

Card 1/2

APPROVED FOR RELEASE: Tuesday, August 01, 2000 CIA-RDP86-00513R0014443

"APPROVED FOR RELEASE: Tuesday, August 01, 2000 CIA-RDP86-00513R001444

L 46963-66

ACC NR: AT6024931

found on copper. Orig. art. has: 5 figures.

SUB CODE: 11/ SUBM DATE: none/ ORIG REF: 007/ OTH REF: 004

Card 2/2 mt

APPROVED FOR RELEASE: Tuesday, August 01, 2000 CIA-RDP86-00513R0014443

"APPROVED FOR RELEASE: Tuesday, August 01, 2000 CIA-RDP86-00513R001444

OKHATSIMSKAYA, M., RASTRUSIN, Y., RAKITYANSKY, I., CHEPETNOV, R.

"Laws of excitation of short-period oscillations in middle latitudes."

report presented at the Intl. Association of Geomagnetism and Aeronomy, Symposium on Rapid Geomagnetic Variations, Utrecht, Netherlands, 1-4 Sep 59.

APPROVED FOR RELEASE: Tuesday, August 01, 2000 CIA-RDP86-00513R0014443

"APPROVED FOR RELEASE: Tuesday, August 01, 2000 CIA-RDP86-00513R001444

29729

S/169/61/000/008/050/053
A006/A101

3,9410 (1482)

AUTHORS: Okhatsimskaya, M.V., Rastrusin, Yu.B., Rokityanskiy, I.I., Shchepetnov, R.V.

TITLE: Regularities in the excitation of short-period oscillations in middle latitudes

PERIODICAL: Referativnyy zhurnal. Geofizika, no. 8, 1961, 42, abstract 8G280 (V sb. "Korotkoperiod. kolebaniya elektromagnitn. polya Zemli, no. 3", Moscow, AN SSSR, 1961, 17 - 22, English summary)

TEXT: The study of short-period oscillations of telluric currents during the IGY was carried out at stations of the Institut fiziki Zemli AN SSSR (Institute of Physics of the Earth, AS USSR) (Borok, Alma-Ata, Petropavlovsk-Kamchatskiy, and Alushta). These investigations made it possible to detect a number of common regularities of short-period oscillations in middle latitudes. There are two basically different types of short-period oscillation: namely, stable oscillations, pc, with T $\sim$(15 ÷ 40) sec and train-type oscillations, pt, with T $\sim$(50 ÷ 90) sec. The maximum number of pc cases occurs at local midday, and pt at local midnight, independent of the longitude of the station. The

Card 1/2

APPROVED FOR RELEASE: Tuesday, August 01, 2000 CIA-RDP86-00513R0014443

"APPROVED FOR RELEASE: Tuesday, August 01, 2000 CIA-RDP86-00513R001444

29729
S/169/61/000/008/050/053
A006/A101

Regularities in the excitation ...

diurnal run of pc is asymmetric and has a broad maximum around midday. The increase of pc amplitudes occurs 1.5 times more quickly than their damping. A somewhat increased pc number was observed in summer as compared to the winter. The diurnal pt run has a sharp maximum around local midnight. Seasonal variability was not observed for pt. Amplitudes of short-period oscillations in middle latitudes are low, being fractions of a unity and a few mv/km for pc, and several mv/km for pt. There are indications of a tendency for increased short-period oscillation amplitudes at seaside stations. Previous concepts on the dependence of pc and pt on universal time were explained as follows: a comparison was made of the diurnal run of short-period oscillations on stations located close in the longitude; a comparison was made of unclear maxima obtained from a small number of cases. This did not permit the detection of the longitudinal effect of maximum shift even for substantially remote stations; moreover, there are oscillations, in both modes, correlated with universal time, which occur seldom but are very intensive.

K. Zybin

[Abstracter's note: Complete translation]

Card 2/2

APPROVED FOR RELEASE: Tuesday, August 01, 2000 CIA-RDP86-00513R0014443

"APPROVED FOR RELEASE: Tuesday, August 01, 2000 CIA-RDP86-00513R001444

PHASE I BOOK EXPLOITATION SOV/5215

Akademiya nauk SSSR. Mezhduvedomstvennyy komitet po provedeniyu Mezhdunarodnogo geofizicheskogo goda. III razdel programmy MGG: Zemnoy magnetizm i zemnye toki.

Korotkoperiodicheskiye kolebaniya elektromagnitnogo polya zemli (Short-Period Oscillations of the Earth's Electromagnetic Field) Moscow, Izd-vo AN SSSR, 1961. 114 p. 1,800 copies printed (Series: Its: Sbornik statey, No. 3)

Resp. Eds.: A. G. Kalashnikov, Doctor of Physics and Mathematics, and V. A. Troitskaya, Candidate of Physics and Mathematics; Ed.: Ye. P. Shchukina; Tech. Ed.: Ye. V. Makuni.

PURPOSE: This publication is intended for geophysicists.

COVERAGE: This collection of articles, published by the Interdepartmental IGY Committee of the USSR Academy of Sciences, treats problems of geomagnetism and telluric currents. Individual articles deal with various (short-period, gigantic, steady, etc.) oscillations of the terrestrial electromagnetic field, particularly in the arctic region. No personalities are mentioned. Brief English abstracts accompany each article. References follow individual articles.

TABLE OF CONTENTS:

Afanas'yeva, V. I. Short-Period Oscillations of the Earth's Magnetic Field

Kebuladze, V. V. Some Regularities of the Disturbed Field of Earth Currents 11

Okhatsimskaya, M. V., Yu. B. Rastrusin, I. I. Rokityanskiy, and R. V. Shenepetnov. Regularities in the Excitation of Short-Period Oscillations in Middle Latitudes 17

Vinogradov, P. A. Short-Period Oscillations of the Electrotelluric Field (According to Observations in Irkutsk) 23

Dubrovskiy, V. G. Rapid Geoelectric and Geomagnetic Variations and Their Regularities (According to Observations in Ashkhabad) 35

Troitskaya, V. A. Steady Oscillations and Chain Oscillations in the Arctic and Antartic 41

Zubareva, E. P. Preliminary Results of Earth Current Observations in Tiksi Bay 62

Nikitina, N. M. Preliminary Results of Earth Current Observations at the Barentsburg Station (Spitsbergen) 69

Zubareva, E. P., G. I. Korobkova, N. M. Nikitina, and V. A. Troitskaya. Gigantic Pulsations in the Soviet Arctic During the 1935-1956 Period 76

Barsukov, O. M., and K. Yu. Zybin. Nonperpendicularity of the Vectors of the E and H Variations of the Earth's Electromagnetic Field 83

Troitskaya, V. A., and M. V. Mal'nikova. Characteristic Intervals of Oscillations, Decreasing Over a Period (10^{-1} sec), in the Earth's Electromagnetic Field, and Their Relationship With Phenomena in the Upper Atmosphere 100

Bol'shakova, O. V., K. Yu. Zybin, and N. F. Mal'tseva. Some Regularities in the Behavior of the Vertical Component of Short-Period Oscillations of the Geomagnetic Field in a Stable Regime (pc) 108

APPROVED FOR RELEASE: Tuesday, August 01, 2000 CIA-RDP86-00513R0014443

"APPROVED FOR RELEASE: Tuesday, August 01, 2000 CIA-RDP86-00513R001444

RASTRUSINA, A.I., vrach

Proper sleep. Zdorov'e 5 no.5:31 My '59. (MIRA 12:11)
(SLEEP)

APPROVED FOR RELEASE: Tuesday, August 01, 2000 CIA-RDP86-00513R0014443

"APPROVED FOR RELEASE: Tuesday, August 01, 2000 CIA-RDP86-00513R001444

KOPP, M.L.; RASTSVETAYEV, L.M.; TRIFONOV, V.G.

Tectonic joints formed by Holocene earthquakes in the central Kopetdag. Izv. AN SSSR Ser. geol. 29 no.7:59-69 Jl '64 (MIRA 18:1)

1. Geologicheskiy institut AN SSSR i Moskovskiy gosudarstvennyy universitet im. M.V. Lomonosova, Moskva.

APPROVED FOR RELEASE: Tuesday, August 01, 2000 CIA-RDP86-00513R0014443

"APPROVED FOR RELEASE: Tuesday, August 01, 2000 CIA-RDP86-00513R001444

RASTSVETAEV, N. K.

21376 RASTSVETAEV, N. K. Karta lesov SSSR. (Voprosy tekhniki kartografirovaniya) Trudy vtorogo vsesoyuz. Geogr. S'ezda. T. 11. M., 1948, S. 450-64, S. Kart.

SO: Letopis' Zhurnal'nykh Statey, No. 29, Moskva, 1949.

APPROVED FOR RELEASE: Tuesday, August 01, 2000 CIA-RDP86-00513R0014443

"APPROVED FOR RELEASE: Tuesday, August 01, 2000 CIA-RDP86-00513R001444

RASTSVETAYEV, M.K.

A valuable aid for students. Sbor.st.po kart.no.4:57-64 '53.
(MIRA 10:12)

(Atlases)

APPROVED FOR RELEASE: Tuesday, August 01, 2000 CIA-RDP86-00513R0014443

"APPROVED FOR RELEASE: Tuesday, August 01, 2000 CIA-RDP86-00513R001444

RASTUNKOVA, L., GALVINICH, R. D.,

"(D.) Changing of Tomato Heredity under the Influence of Light and Low Temperatures."

report submitted for the 11th Intl. Congress of Genetics, The Hague, Netherlands, 2-10 Sep 63

APPROVED FOR RELEASE: Tuesday, August 01, 2000 CIA-RDP86-00513R0014443

"APPROVED FOR RELEASE: Tuesday, August 01, 2000 CIA-RDP86-00513R001444

RUB, M.G.; ONIKHIMOVSKIY, V.V.; BAKULIN, Yu.I.; GLAVATSKAYA, V.N.; KOSHMAN, P.N.; MAKEYEV, B.V.; RASTUNTSEV, A.P.; SELEZNEV, P.N.; TERENTENKO, N.A.; YANONIS, V.V.; KOPTEV-DVORNIKOV, V.S., otv.red.; ANDREYEV, Yu.K., red.izd-va; GOLUB', S.P., tekhn.red.

[Granitoids of the Myao-Chansk region and postmagmatic formations associated with them] Granitoidy Miao-Chanskogo raiona i sviazannye s nimi postmagmaticheskie obrazovaniia. Moskva, Izd-vo Akad.nauk SSSR, 1962. 168 p. (Akademiia nauk SSSR. Institut geologii rudnykh mestorozhdenii petrografii, mineralogii i geokhimii. Trudy, no.62). (MIRA 15:8)

(Kharbarovsk Territory--Granite)

APPROVED FOR RELEASE: Tuesday, August 01, 2000 CIA-RDP86-00513R0014443

"APPROVED FOR RELEASE: Tuesday, August 01, 2000 CIA-RDP86-00513R001444

[illegible], A. [illegible]

"Interclonic Over-Pollination of Rye and Kok-Saghiz." Cand Biol Sci, Inst of Genetics, Acad Sci USSR, Moscow, 1953. (RZhBiol, No 1, Sep 54)

SO: Sum 432, 29 Mar 55

APPROVED FOR RELEASE: Tuesday, August 01, 2000 CIA-RDP86-00513R0014443

"APPROVED FOR RELEASE: Tuesday, August 01, 2000 CIA-RDP86-00513R001444

RASTVOROVA, A.A.

Circulatory disorders in the brain stem. Zhur.nevr. i psikh. 59 no.8:923-928 '59. (MIRA 12:12)

1. Klinika nervnykh bolezney (dir. - prof. N.K. Bogolepov) II Moskovskogo meditsinskogo instituta imeni N.I. Pirogova.
(BRAIN STEM blood supply)

APPROVED FOR RELEASE: Tuesday, August 01, 2000 CIA-RDP86-00513R0014443

"APPROVED FOR RELEASE: Tuesday, August 01, 2000 CIA-RDP86-00513R001444

MASTVORVA, A. A.

BRAIN - Wounds and Injuries

Plastic hypertonia on the focal side in injury to brain vessels. Zhur. nevr. i psikh. 52, No. 7, 1952.

Monthly List of Russian Accessions, Library of Congress, November 1952, UNCLASSIFIE

APPROVED FOR RELEASE: Tuesday, August 01, 2000 CIA-RDP86-00513R0014443

"APPROVED FOR RELEASE: Tuesday, August 01, 2000 CIA-RDP86-00513R001444

BASTVOROVA, A.A.

Localization of foci of malaria in disorders of cerebral circulation [with summary in French]. Zhur.nevr. i psikh 28 no.9:1050-1056 '58 (MIRA 11:11)

1. Klinika nervnykh bolezney (zav. kafedroy - prof. I.N. Filimonov) II Moskovskogo meditsinskogo instituta imeni N.I. Pirogova.
(BRAIN HEMORRHAGE, pathology
soft foci (Rus))

APPROVED FOR RELEASE: Tuesday, August 01, 2000 CIA-RDP86-00513R0014443