"APPROVED FOR RELEASE: Tuesday, August 01, 2000 CIA-RDP86-00513R001444

RATTS, E.G.

From the history of reinforced concrete in Russia. Trudy po ist. tekh. no.8:139-167 '54. (MLRA 8:2)
(Reinforced concrete—History)

APPROVED FOR RELEASE: Tuesday, August 01, 2000 CIA-RDP86-00513R0014443

"APPROVED FOR RELEASE: Tuesday, August 01, 2000 CIA-RDP86-00513R001444

RATTS, E. G.

GUTSKOV, Ye.V., inzhener; MIROTVORSKIY, S.A., inzhener; RATTS, E.G., kandidat tekhnicheskikh nauk.

Application of conveyor system to the production of large reinforced concrete construction elements. Stroi.prom. 32 no.8:2-11 Ag '54.

1. Glavzhelezobeton (for Gutskov). 2. Lyuberetskiy zavod (for Mirotvorskiy). 3. VNIIzhelezobeton (for Ratts).
(Reinforced concrete) (Building materials industry)

APPROVED FOR RELEASE: Tuesday, August 01, 2000 CIA-RDP86-00513R0014443

"APPROVED FOR RELEASE: Tuesday, August 01, 2000 CIA-RDP86-00513R001444

RATTS, E.G., kandidat tekhnicheskikh nauk.

Mechanized decorative finishing of large wall blocks. Sbor.mat. o nov.tekh. v strei. 17 no.9:9-17 '55. (MLRA 9:1)
(Concrete blocks)

APPROVED FOR RELEASE: Tuesday, August 01, 2000 CIA-RDP86-00513R0014443

"APPROVED FOR RELEASE: Tuesday, August 01, 2000 CIA-RDP86-00513R001444

RATTS, E.G., kandidat tekhnicheskikh nauk.

Precast reinforced concrete window frames. Stroi.prom. 33 no.3:27-33 Mr '55. (MLRA 8:5)

1. VNIIzhelezobeton.
(Windows) (Precast concrete)

APPROVED FOR RELEASE: Tuesday, August 01, 2000 CIA-RDP86-00513R0014443

"APPROVED FOR RELEASE: Tuesday, August 01, 2000 CIA-RDP86-00513R001444

RATTS, E.

Story about prestressed reinforced concrete. Stroitel' no.12:20-23 D '56. (MLRA 10:2)

(Prestressed concrete)

APPROVED FOR RELEASE: Tuesday, August 01, 2000 CIA-RDP86-00513R0014443

"APPROVED FOR RELEASE: Tuesday, August 01, 2000 CIA-RDP86-00513R001444

RATTS, E.

Story about prestressed reinforced concrete. Stroitel' no.1: 22-25 Ja '57. (MLRA 10:2)

(Prestressed concrete)

APPROVED FOR RELEASE: Tuesday, August 01, 2000 CIA-RDP86-00513R0014443

"APPROVED FOR RELEASE: Tuesday, August 01, 2000 CIA-RDP86-00513R001444

RATTS, E.

Story about prestressed reinforced concrete. Stroitel' no.2:23-26 F '57. (MIRA 10:3)

(Prestressed concrete)

APPROVED FOR RELEASE: Tuesday, August 01, 2000 CIA-RDP86-00513R0014443

"APPROVED FOR RELEASE: Tuesday, August 01, 2000 CIA-RDP86-00513R001444

RATTS, E.

Story about the prestressed reinforced concrete. Stroitel' no.3:18-20 Mr '57. (MIRA 10:4)

(Prestressed concrete)

APPROVED FOR RELEASE: Tuesday, August 01, 2000 CIA-RDP86-00513R0014443

"APPROVED FOR RELEASE: Tuesday, August 01, 2000 CIA-RDP86-00513R001444

AUTHOR: Ratts, E.G., Candidate of Mechanical Sciences. 170

TITLE: Concrete constructions reinforced with prestressed reinforcement. (Zhelezobetonnye konstruktsii, armirovannye strunobetonnymi elementami).

PERIODICAL: "Beton i Zhelezobeton" (Concrete and Reinforced Concrete), No.3, 1957, pp.77 - 86 (U.S.S.R.)

ABSTRACT: In prestressed constructions the concrete is much sooner subjected to compression on the entire cross-section than in ordinary concrete. Fibres compress under the effect of external loading. Various constructions are subjected to prestressing often only in those parts of the section which require it due to the conditions of stresses and to avoid cracking. Table 1 gives normal stresses of a cross-section reinforced in the usual way with the prestressed reinforcement at the bottom, and double prestressed reinforcement (top and bottom) and finally with a prestressed reinforced core. It can be seen that the best utilisation of concrete is obtained under the last mentioned conditions. Combined constructions consisting of pretensioned precast bottom units, both solid and hollow, often serving as formwork for the top part (which is ordinary, in situ, concrete) has recently been used to a large extent in the USSR. Various types of prestressed reinforced core elements are indicated as used during tests in VNIIZHelezobeton.

APPROVED FOR RELEASE: Tuesday, August 01, 2000 CIA-RDP86-00513R0014443

"APPROVED FOR RELEASE: Tuesday, August 01, 2000 CIA-RDP86-00513R001444

Concrete constructions reinforced with prestressed reinforcement. (Cont.) 170

The length of anchoring of high-tensile prestressed reinforcement in core elements is given in diagram 4. The above named institute carried out a number of experiments with prestressed core units in beams, T-beams, solid slabs and with various types of hollow slabs. If satisfactory adhesion between the core and the surrounding ordinary concrete was achieved the combined construction has the same strength as with pretensioned reinforcement. Examples of calculating the stresses and the formation of cracks in prestressed reinforced constructions with differently situated core units are included. Constructional details of hollow floor slabs reinforced with prestressed core units are illustrated as well as slabs with ribs, assembled foundation blocks and flights of stairs to indicate the possible practical application of this method. Manufacturing problems such as the layout of special workshops for prestressed prefabricated core-units and special plant requirements are discussed. There are 4 graphs, 2 diagrams, 8 constructional details, 1 layout of the workshop and 1 layout of the plant.

APPROVED FOR RELEASE: Tuesday, August 01, 2000 CIA-RDP86-00513R0014443

"APPROVED FOR RELEASE: Tuesday, August 01, 2000 CIA-RDP86-00513R001444

97-58-1-2/12

AUTHOR: ~~Ratts, E.G.~~ Candidate of Mechanical Science.
Kholmyanskiy, M.M. Candidate of Mechanical Science.
Kol'ner, V.M., Engineer

TITLE: Transfer of Stresses from Tensioned Reinforcement on Concrete. (Peredacha armaturoy predvaritel'nykh napryazheniy na beton)

PERIODICAL: Beton i Zhelezobeton. 1958. No. 1 USSR Pp 4-13.

ABSTRACT: The transfer of stresses in concrete begins at the end of prestressed concrete products (vide Figure 1) Stresses could be calculated from a formula of equilibrium as shown. Investigations of these stresses were carried out in the laboratories of VNIIZhelezobeton under the leadership of E.G. Ratts. Associated with him were F.S. Belavin and L.P. Serova. Figure 2 illustrates various types of reinforcement used for tests and Table 1 tabulates characteristics of the reinforcements used. Tensioning in the reinforcements was measured by a "dynamometer" - DP-2. This instrument was constructed by the all-Soviet Scientific and Research Institute of the Ministry for Transportation Construction (Vsesoyuznyy Nauchno-issledovatel'skiy Institut Transportnogo Stroitel'stva Mintransstroya SSSR) (See article by N.M. Bogin in Beton i Zhelezobeton 1956 No.3) The measurement of the displacement of reinforcement in concrete was

Card 1/2

APPROVED FOR RELEASE: Tuesday, August 01, 2000 CIA-RDP86-00513R0014443

"APPROVED FOR RELEASE: Tuesday, August 01, 2000 CIA-RDP86-00513R001444

97-58-1-2/12

Transfer of Stresses from Reinforcement on Concrete.

carried out by a microscope, magnifying 120 times, with an occular micrometer attached - AM-92. The accuracy of this instrument is 2-4 microns. Figure 3 illustrates laboratory testing equipment for casting pretensioned reinforced units. Figures 4,5 and 6 show graphs obtained during testing of stresses between reinforcement and concrete in prestressed reinforced testing samples with various reinforcements and qualities of concrete. Figure 8 shows relationship of described stresses as being the function of the depth of "setting in". Type TP reinforcement of 4 m.m diameter and various profiles was used. Figure 9 illustrates graphs giving empirical coefficients in relationship to the strength of the concrete. Distribution of of stresses at the ends of testing units caused by tensions between reinforcement and concrete was investigated and formulae are given. Experimental checking of mathematical calculations and practical recommendations are discussed. Table 2 gives figures for lengths of anchoring zones for various profiles of reinforcement and Table 3 gives recommendations for actual calculation of the length of the anchoring zone of standard reinforcement. Figure 14 shows a curve defining lengths of the anchoring zone and Figure 15 the distribution of normal stresses in the reinforcement in the zone. There are 15 Figures and 3 Tables.

Card 2/2

1. Reinforced concrete--Properties 2. Reinforcing steel--Stresses

APPROVED FOR RELEASE: Tuesday, August 01, 2000 CIA-RDP86-00513R0014443

"APPROVED FOR RELEASE: Tuesday, August 01, 2000 CIA-RDP86-00513R001444

SOV/97-58-11-2/11

AUTHOR: Ratts, E.G. (Candidate of Technical Sciences)

TITLE: Precast, Prestressed Reinforced Concrete Constructions With the Rod Reinforcement Tensioned by Electro-Thermal Method (Predvaritel'no napryazhennye zhelezobetonnyye konstruktsii so sterzhnevoy armaturoy, napryagayemoy elektrotermicheskim sposobom).

PERIODICAL: Beton i Zhelezobeton, 1958, Nr.11, pp.410-414 (USSR)

ABSTRACT: The mechanical tensioning of reinforcement by means of hydraulic jacks requires special equipment. In many factories, therefore, the tensioning is carried out by an electro-thermal method. This method is based on the fact that the rod undergoes elongation when heated by an electric current. When the required elongation is attained the ends are anchored, the required tensioning being produced on cooling. The first factory to introduce this method is in Chelyabinsk. A current producing a temperature of 300-400°C was used. It was necessary to insulate the reinforcement from the steel framework before applying the current. The advantages of this method lie in the

Card 1/5

APPROVED FOR RELEASE: Tuesday, August 01, 2000 CIA-RDP86-00513R0014443

"APPROVED FOR RELEASE: Tuesday, August 01, 2000 CIA-RDP86-00513R001444

SOV/97-58-11-2/11

Precast, Prestressed Reinforced Concrete Constructions With the Rod Reinforcement Tensioned by Electro-Thermal Method

simplicity of the casting forms and of application under varying factory conditions. This method, however, requires the use of straight reinforcement and insulation. The NIIZhelezobeton and the factory Nr.12 of Glavmosznelezobeton devised and introduced an improved method of electro-thermal tensioning of rod reinforcement. The following technicians participated in the work: S.I. Mishin, E.G. Ratts, I.P. Barbarash, V.M. Gdalevich (NIIZhelezobeton), T.F. Konstantinov, A.K. Mkrtumyan, B.F. Gaysanyuk and M.L. Petrishin (factory Nr.12). Steel reinforcement Mark 30KhG2S or high tensile reinforcement Mark 25G2S can be tensioned up to 5000-5400 kg/cm^2. Requirements of "Instructions on Designing Precast Prestressed Reinforced Concrete Constructions" (SN 10-57) stipulate the degree of tensioning and allow for small cracks in the concrete. Various types of building constructions are designed for tensioning up to 3000-3500 kg/cm^2 which take into account these small cracks. Consequently these precast prestressed reinforced concrete constructions can have an initial

Card 2/5

APPROVED FOR RELEASE: Tuesday, August 01, 2000 CIA-RDP86-00513R0014443

"APPROVED FOR RELEASE: Tuesday, August 01, 2000 CIA-RDP86-00513R001444

SOV/97-58-11-2/11

Precast, Prestressed Reinforced Concrete Constructions With the Rod Reinforcement Tensioned by Electro-Thermal Method

tensioning within the limits of 3000-5000 kg/cm^2. Tensioning corresponds to an elongation of 9 to 15 mm for a 6 m long reinforcement rod. The heating is carried out using welding transformers. Three to six rods are heated simultaneously. The electrical contacts are so positioned that the rods remain cold 400 to 600 mm from the end of the rod. The heating installation has automatic switch-off arrangements which operate when the required elongation has been obtained. The latest heating device has pneumatic clasps which prevent the fusing of steel at the location of the electric contact. The automatic control of elongation is necessary as rods made from high-tensile steel Mark 25G2S or St5 should not be heated above 350 to 400°C. Tests proved that when 14 mm diameter rod reinforcement of standard cross section is used for hollow floor slabs, the strength of the concrete should be not less than 140 kg/cm^2. Near the ends it is necessary to use mesh-reinforcement for the hollow beam slabs (Fig.3). Further tests were carried out on 0.8 m

Card 3/5

APPROVED FOR RELEASE: Tuesday, August 01, 2000 CIA-RDP86-00513R0014443

"APPROVED FOR RELEASE: Tuesday, August 01, 2000 CIA-RDP86-00513R001444

SOV/97-58-11-2/11

Precast, Prestressed Reinforced Concrete Constructions With the Rod Reinforcement Tensioned by Electro-Thermal Method

wide floor slabs with four cavities reinforced with steel 30KhG2S of 14 mm diameter. The initial tensioning was found to vary not only in various slabs but also in the same slab. In one case, for example, one bar was stressed to 5000 kg/cm^2 and two others to 3000 kg/cm^2 each. In this case the resultant stress is equal to the mean stressing of the bars. Factory Nr.12 of Glavmoszhelezobeton is manufacturing floor slabs 0.8 and 1.2 m wide and 5.9 and 6.3 m long, cast in metal forms. Fig.4 shows various types of anchoring which is welded to the ends of the bars, and saddles fixed to the forms. The factory "Barrikada", Leningrad, is using wedge shaped clips which are removed after the concrete has set and can be re-used. In the early days of mass production of hollow floor slabs by this new tensioning method the actual tensioning of the reinforcement was controlled by the Laboratory for Precast Reinforced Concrete Constructions, NIIZhelezobeton (Laboratoriya sbornykh zhelezobetonnykh konstruktsiy NIIZhelezobeton) in the factories Nrs.4, 6 and 12, and in

Card 4/5

APPROVED FOR RELEASE: Tuesday, August 01, 2000 CIA-RDP86-00513R0014443

"APPROVED FOR RELEASE: Tuesday, August 01, 2000 CIA-RDP86-00513R001444

SOV/97-58-11-2/11

Precast, Prestressed Reinforced Concrete Constructions with the Rod Reinforcement Tensioned by Electro-thermal Method

the factories of Glavmoszhelezobeton.
There are 5 figures.

Card 5/5

APPROVED FOR RELEASE: Tuesday, August 01, 2000 CIA-RDP86-00513R0014443

"APPROVED FOR RELEASE: Tuesday, August 01, 2000 CIA-RDP86-00513R001444

RATTS, E.G., kand. tekhn. nauk

Special problems in using electric heating for stretching. Stroitel' no.9:22-24 S '59. (MIRA 13:3)
(Reinforcing bars) (Electric heating)

APPROVED FOR RELEASE: Tuesday, August 01, 2000 CIA-RDP86-00513R0014443

"APPROVED FOR RELEASE: Tuesday, August 01, 2000 CIA-RDP86-00513R001444

RATTS, Emmanuil Genrikhovich, kand. tekhn. nauk; TSEYTLIN, Semen Yudovich, kand. tekhn. nauk; MILOVIDOV, Konstantin Ivanovich, inzh.; YARMOLINSKIY, Vladimir Moiseyevich, inzh.; ANTONOVA, N.N., inzh., red.

[12 m reinforced concrete crane beams with rod reinforcement stressed by the electrothermal method; practices of the All-Union Research Institute for Reinforced Concrete and Plant No.18 for Reinforced Concrete Products of the Main Administration for Building Materials of the City of Moscow] Zhelezobetonnye podkranovye balki dlinoi 12 M so sterzhnevoi armaturoi, napriagaemoi elektrotermicheskim metodom; opyt raboty VNIIzhelezobetona zavoda zhelezobetonnykh izdelii no.18 Glavmosprom stroimaterialov. Moskva, Stroiizdat, 1964. 31 p. (MIRA 18:5)

1. Zaveduyushchiy laboratoriyey sbornykh zhelezobetonnykh konstruktsiy Vsesoyuznogo nauchno-issledovatel'skogo instituta zavodskoy tekhnologii sbornykh zhelezobetonnykh konstruktsiy i izdeliy(for Ratts). 2. Zaveduyushchiy sektorom inzhenernoy konstruktsii Vsesoyuznogo nauchno-issledovatel'skogo instituta zavodskoy tekhnologii sbornykh zhelezobetonnykh konstruktsiy i izdeliy (for TSeytlin). 3. Glavnyy konstruktor sektora inzhenernykh konstruktsiy Vsesoyuznogo nauchno-issledovatel'skogo instituta zavodskoy tekhnologii sbornykh zhelezobetonnykh konstruktsiy i izdeliy(for Milovidov).

APPROVED FOR RELEASE: Tuesday, August 01, 2000 CIA-RDP86-00513R0014443

"APPROVED FOR RELEASE: Tuesday, August 01, 2000 CIA-RDP86-00513R001444

RATTS, E.G., kand.tekhn.nauk, laureat Leninskoy premii; TSEYTLIN, Sh.Yu., kand.tekhn.nauk; ALIYEV, Sh.A., inzh.

Study of precast reinforced concrete foundations reinforced with prestressed elements. Sbor. trud. NIIZHelezobetona no.5:3-19 '61. (MIRA 16:3)

(Foundations) (Precast concrete--Testing)

APPROVED FOR RELEASE: Tuesday, August 01, 2000 CIA-RDP86-00513R0014443

"APPROVED FOR RELEASE: Tuesday, August 01, 2000 CIA-RDP86-00513R001444

L 45966-66 EWT(1)/EWT(m) SCTB JKT/DD/RD/JT/GD/JXT(CZ)
ACC NR: AT6030697 SOURCE CODE: UR/0000/66/000/000/0081/0084

AUTHOR: Cherkasov, V. K.; Ushakova, G. S.; Piguzova, L. I.; Devyatko, A. V.; Mokhov, V. G.; Solov'yev, V. I.; Portnova, K. M.; D'yakonov, R. V.; Martynova, R. A.; Ratts, L. B.

ORG: none

51
B+1

TITLE: The possibility of using the multifunctional properties of zeolites in a physical and chemical air-regeneration system

SOURCE: Konferentsiya po kosmicheskoy biologii i meditsine, 1964. Materialy. Moscow, Inst. mediko-biol. problem, 1966, 81-84

TOPIC TAGS: life support system, closed ecological system, space biology

ABSTRACT: A physical-chemical air "regeneration" system which has been proposed for manned spaceflight is shown in Fig. 1. In this system CO_2 is removed from cabin air by adsorption on zeolite. The carbon dioxide then undergoes vacuum desorption from the zeolite and passes through a CO_2 collector to the catalytic reactor, where it is reduced with hydrogen from the electrolyzer to water and methane. The water returns to the electrolyzer and is broken down into oxygen (used for human respiration) and hydrogen. The disadvantages of this method are the difficulties of creating a vacuum on board a spacecraft and the additional electrical energy required to operate the CO_2 collector. Studies have shown that specially treated B-zeolite

Card 1/3

APPROVED FOR RELEASE: Tuesday, August 01, 2000 CIA-RDP86-00513R0014443

"APPROVED FOR RELEASE: Tuesday, August 01, 2000 CIA-RDP86-00513R001444

L 45966-66

ACC NR: AT6030697

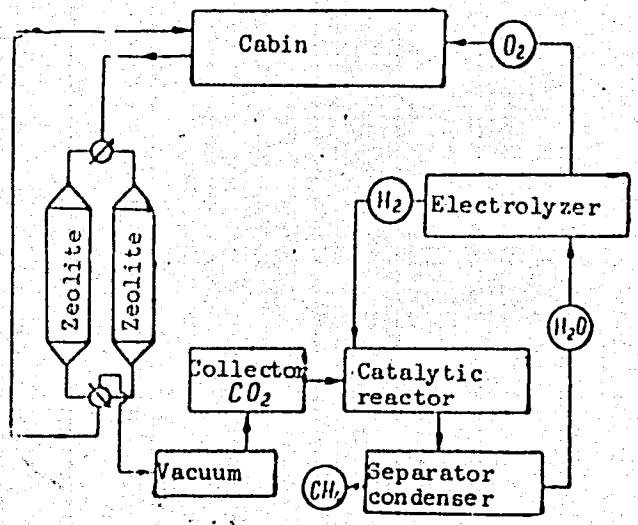

Fig. 1. Schematic diagram of a physical and chemical air "regeneration" system

can be used in such a system for both sorption and catalysis, retaining its properties through a number of cycles. An improved air "regeneration" scheme using B-zeolite is shown in Fig. 2.. Cabin air is purified by passing through a B-zeolite

Card 2/3

APPROVED FOR RELEASE: Tuesday, August 01, 2000 CIA-RDP86-00513R0014443

"APPROVED FOR RELEASE: Tuesday, August 01, 2000 CIA-RDP86-00513R001444

L 45966-66
ACC NR: AT6030697

0

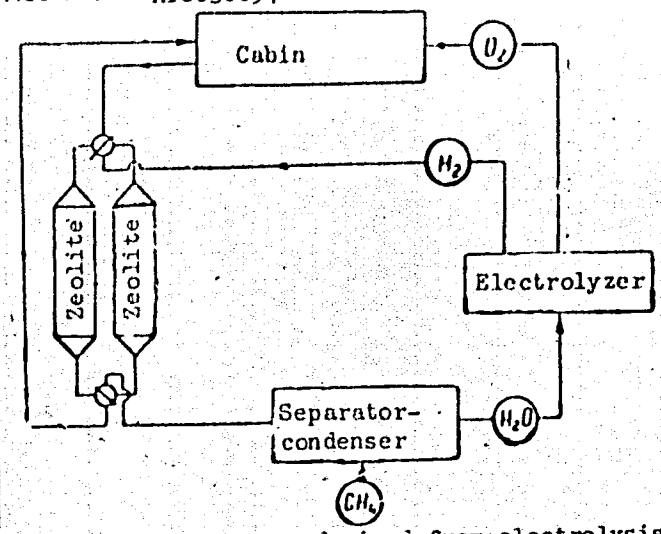

Fig. 2. Schematic diagram of a physical-chemical air "regeneration" system using B-zeolite

adsorber. Hydrogen derived from electrolysis is then passed through zeolite in a second adsorber, simultaneously desorbing CO_2 and reducing it to water and methane. The water is electrolyzed as in the first system. Temperature regulation is very important for the successful operation of this system, since a 7—12C temperature variation alters the gas conversion level by 10—15%. Orig. art. has: 3 figures. [JS]

SUB CODE: 06/ SUBM DATE: 14Apr66/ ATD PRESS: 5086

Card 3/3 hs

APPROVED FOR RELEASE: Tuesday, August 01, 2000 CIA-RDP86-00513R0014443

"APPROVED FOR RELEASE: Tuesday, August 01, 2000 CIA-RDP86-00513R001444

RATTSEVA, I.I.

Algorithmization of the search for semantic connections. NTI no.8:35-42 '65. (MIRA 18:9)

APPROVED FOR RELEASE: Tuesday, August 01, 2000 CIA-RDP86-00513R0014443

"APPROVED FOR RELEASE: Tuesday, August 01, 2000 CIA-RDP86-00513R001444

HATTSKE, U.

Proactinomyces in Turf-Podzolic soils. Izv. AN SSSR. Ser. biol. no.5:735-739 S-O '64. (MIRA 17:9)

1. Moskovskaya sel'skokhozyaystvennaya akademiya im. Timiryazeva.

APPROVED FOR RELEASE: Tuesday, August 01, 2000 CIA-RDP86-00513R0014443

"APPROVED FOR RELEASE: Tuesday, August 01, 2000 CIA-RDP86-00513R001444

RATC, E.G. [Ratts, E.G.], k.n.t. (Moskwa); ZODZISZSKIJ, I.L.Z., [Zhodzishskiy, I.L.] k.n.t. (Moskwa); TABAKOW, W.F. [Tabakov, V.F.] inz. (Moskwa); LENKIEWICZ, Wl., dr inz. [translator]

Apartment buildings constructed from spatial elements completely prefabricated. Inz i bud 19 no.2:41-50 F '62.

APPROVED FOR RELEASE: Tuesday, August 01, 2000 CIA-RDP86-00513R0014443

"APPROVED FOR RELEASE: Tuesday, August 01, 2000 CIA-RDP86-00513R001444

RATTS, E.G., kand.tekhn.nauk; TSEYTLIN, Sh.Yu., kand.tekhn.nauk

Improvement of prestressed structural units of industrial buildings and methods of manufacture. Prom. stroi. 39 no.3:20-24 '61. (MIRA 14:4)

1. Nauchno-issledovatel'skiy institut Zhelezobeton Glavmospromstroymaterialov.

(Prestressed concrete)

APPROVED FOR RELEASE: Tuesday, August 01, 2000 CIA-RDP86-00513R0014443

"APPROVED FOR RELEASE: Tuesday, August 01, 2000 CIA-RDP86-00513R001444

APPROVED FOR RELEASE: Tuesday, August 01, 2000 CIA-RDP86-00513R0014443

"APPROVED FOR RELEASE: Tuesday, August 01, 2000 CIA-RDP86-00513R001444

RATTS, Emmanuil Genrikhovich, kand.tekhn.nauk; TSEYTLIN, Sholom Yudovich, kand.tekhn.nauk; MASARSKIY, Aba Solomonovich; SHCHUKIN, Viktor Semenovich, starshiy inzh.; UKRAINCHIK, M.M., inzh., red.

[Large prestressed concrete "Double T" slabs for roofs of buildings] Predvaritel'no napriazhennye zhelezobetonnye krupnye paneli "dvoinoe T" dlia pokrytii zdanii; iz opyta NIIZHelezobetona i zavoda No.22 Glavmosproms troimaterialov. Moskva, Gos.izd-vo lit-ry po stroit., arkhit. i stroit.materialam, 1960. 27 p. (MIRA 14:12)

1. Akademiya stroitel'stva i arkhitektury SSSR. Institut organizatsii, mekhanizatsii i tekhnicheskoy pomoshchi stroitel'stvu. Byuro tekhnicheskoy informatsii. 2. Zaveduyushchiy laboratoriyey sbornykh zhelezobetonnykh konstruktsiy Nauchno-issledovatel'skogo instituta zhelezobetonnykh izdeliy i nerudnykh materialov (for Ratts). 3. Zaveduyushchiy sektorom inzhenernykh konstruktsiy Nauchno-issledovatel'skogo instituta zhelezobetonnykh izdeliy i nerudnykh materialov (for TSeytlin). 4. Glavnyy inzh. zavoda No.22 Glavmosproms troymaterialov (for Masarskiy). 5. Nauchno-issledovatel'skiy institut zhelezobetonnykh izdeliy i nerudnykh materialov (for Shchukin).

(Precast concrete construction)
(Roofing, Concrete)

APPROVED FOR RELEASE: Tuesday, August 01, 2000 CIA-RDP86-00513R0014443

"APPROVED FOR RELEASE: Tuesday, August 01, 2000 CIA-RDP86-00513R001444

RATTS, E.G., kand.tekhn.nauk; TSEYTLIN, Sh. Yu., kand.tekhn.nauk

Improving prestressed elements of industrial buildings and ways to prepare them. Prom. stroi. 39 no.4:32-37 '61. (MIRA 14:6)
(Prestressed concrete)

APPROVED FOR RELEASE: Tuesday, August 01, 2000 CIA-RDP86-00513R0014443

"APPROVED FOR RELEASE: Tuesday, August 01, 2000 CIA-RDP86-00513R001444

RAITS, YE. T., TIMOFEYEV, A. K.

Precast Concrete Construction

Line production of panels in movable forms on lines in multiple-section rooms. Stroi. prom. 30 no. 3,1952

Monthly List of Russian Accessions, Library of Congress, August 1952. UNCLASSIFIED.

APPROVED FOR RELEASE: Tuesday, August 01, 2000 CIA-RDP86-00513R0014443

"APPROVED FOR RELEASE: Tuesday, August 01, 2000 CIA-RDP86-00513R001444

DAHOLOS, Ye.N.; [illegible], O.K.; RATTSEVA, I.I.; SHNEYDER, Ya.A.

Algorithm for the automatic determination of semantic coordinates. NTI no.5:29-34 '64. (MIRA 17:10)

APPROVED FOR RELEASE: Tuesday, August 01, 2000 CIA-RDP86-00513R0014443

"APPROVED FOR RELEASE: Tuesday, August 01, 2000 CIA-RDP86-00513R001444

TEPPER, Ye.Z., dotsent, kand. biolog. nauk; RATTSKE, U., aspirant

Proactinomyces from the autochthonous soil microflora and their physiological properties. Izv. TSKHA no.3:189-202 '64. (MIRA 17:11)

1. Kafedra mikrobiologii Moskovskoy sel'skokhozyaystvennoy akademii imeni Timiryazeva.

APPROVED FOR RELEASE: Tuesday, August 01, 2000 CIA-RDP86-00513R0014443

"APPROVED FOR RELEASE: Tuesday, August 01, 2000 CIA-RDP86-00513R001444

550. CORNEAL CONTACT-LENSES - Lentilele de contact corneene - Raţu E. - OFTALMOLOGIA (Bucureşti) 1957, 2/2 (172-178) Illus. 2

The corneal contact lenses constructed by the author are smaller than the classical ones and are only applied to the cornea. Thus, oedema of the cornea is avoided and the tolerance is improved. Contact lenses are indicated in myopia, hypermetropia, astigmatism not exceeding 1.5-2 D., keratoconus and aphakia. Corneal lenses were applied in 6 cases: 2 of keratoconus, 2 of monocular aphakia and 2 of myopia, with satisfactory results. One diagram, 13 references. Puscariu - Bucharest

APPROVED FOR RELEASE: Tuesday, August 01, 2000 CIA-RDP86-00513R0014443

"APPROVED FOR RELEASE: Tuesday, August 01, 2000 CIA-RDP86-00513R001444

RATNOVSKIY, I.I.

Upper Dui series and its analogues in Sakhalin. Trudy VNIGRI no.131:205-214 '59. (MIRA 12:9)
(Sakhalin--Geology, Stratigraphic)

APPROVED FOR RELEASE: Tuesday, August 01, 2000 CIA-RDP86-00513R0014443

"APPROVED FOR RELEASE: Tuesday, August 01, 2000 CIA-RDP86-00513R001444

24(4)

AUTHOR: Ratsbaum, Ye. A. SOV/32-25-9-29/53

TITLE: News in Brief

PERIODICAL: Zavodskaya laboratoriya, 1959, Vol 25, Nr 9, p 1100 (USSR)

ABSTRACT: Ye. A. Ratsbaum, Leningradskaya lesotekhnicheskaya akademiya im. S. M. Kirova (Leningrad Academy of Forestry Engineering imeni S. M. Kirov) proposes the use of an interrupted arc for the quantitative spectral analysis of OTsS bronze. The electrode moves up and down and interrupts the arc 7 times per second. The arc is fed by an alternating-current generator of the PS-39 type with amperage of 3 a . Spectrographic analysis is made on a spectrograph of medium dispersion under exposure of 2 minutes. The following analytical lines are used: Zn 3075.86 - Cu 3075.80 , Pb 2833.06 - Cu 2882.93 , Sn 2913.54 - Cu 2882.93 .

ASSOCIATION: Leningradskaya lesotekhnicheskaya akademiya im. S. M. Kirova (Leningrad Academy of Forestry Engineering imeni S. M. Kirov)

Card 1/1

APPROVED FOR RELEASE: Tuesday, August 01, 2000 CIA-RDP86-00513R0014443

"APPROVED FOR RELEASE: Tuesday, August 01, 2000 CIA-RDP86-00513R001444

RYABCHIKOV, A.M.; SKVORTSOV, Yu.A.; RATSEK, V.I.

Recollections of Nikolai Leopol'dovich Kerzhenevskii. Izv. Vses. geog. ob-va 91 no.1:91-93 Ja-F '59. (MIRA 12:3)
(Kerzhenevskii, Nikolai Leopol'dovich, 1879-1958)

APPROVED FOR RELEASE: Tuesday, August 01, 2000 CIA-RDP86-00513R0014443

"APPROVED FOR RELEASE: Tuesday, August 01, 2000 CIA-RDP86-00513R001444

ZHALNIN, I.Ye., inzh.; STARIKOVA, Ye.V., inzh.; TINDO, P.S., inzh.; KOROBKO, V.A., inzh.; RATUSH, G.N., inzh.; SOLGANIK, G.Ya., vedushchiy red.; TROFIMOV, A.V., tekhn.red.

[Technical specifications for petroleum products] Tekhnicheskie usloviia na nefteprodukty. Moskva, Gos.nauchno-tekhn. izd-vo neft. i gorno-toplivnoi lit-ry, 1960. 482 p. (MIRA 13:3)

(Petroleum products--Specifications)

APPROVED FOR RELEASE: Tuesday, August 01, 2000 CIA-RDP86-00513R0014443

"APPROVED FOR RELEASE: Tuesday, August 01, 2000 CIA-RDP86-00513R001444

ZHALNIN, I.Ye., inzh.; STARIKOVA, Ye.V., inzh.; TINDO, P.S., inzh.; KOROBKO, V.A., inzh.; RATUSH, G.N., inzh.; SOLGANIK, G.Ya., vedushchiy red.; TROFIMOV, A.V., tekhn.red.

[Technical specifications for petroleum products] Tekhnicheskie usloviia na nefteprodukty. Moskva, Gos.nauchno-tekhn. izd-vo neft. i gorno-toplivnoi lit-ry, 1960. 462 p. (MIRA 13:3)
(Petroleum products) (Petroleum chemicals)

APPROVED FOR RELEASE: Tuesday, August 01, 2000 CIA-RDP86-00513R0014443

"APPROVED FOR RELEASE: Tuesday, August 01, 2000 CIA-RDP86-00513R001444

GUREVICH, Ya.D.; SMIRNOV, A.S.; LIVSHITS, Z.I.; LOSEV, M.T.; BALANOVSKIY, S.A.; UDYANSKIY, N.Ya.; MURAV'YEV, V.M.; AMIYAN, V.A.; LOZGACHEV, P.M.; OFROSIMOV, V.S.; POPOV, S.S.; MATSKIN, L.A.; RATUSH, P.P.; PARFENOV, Ye.I.; DUBROVINA, N.D., vedushchiy red.; MUKHINA, E.A., tekhn.red.

[Soviet petroleum industry] Neftianaia promyshlennost' SSSR. Moskva, Gos.nauchno-tekhn.izd-vo neft. i gorno-toplivnoi lit-ry, 1958. 330 p. (MIRA 11:3)

(Petroleum industry)

APPROVED FOR RELEASE: Tuesday, August 01, 2000 CIA-RDP86-00513R0014443

"APPROVED FOR RELEASE: Tuesday, August 01, 2000 CIA-RDP86-00513R001444

BUNCHUK, V.A., redaktor; RATUSH, P.P., redaktor; L'VOVA, M.S., vedushchiy redaktor; SHIKIN, S.T., tekhnicheskiy redaktor

[Tank farms and petroleum pipelines (design, construction and exploitation); according to reports at the Conference for the improvement of the designing, construction and exploitation of tank farms and petroleum product pipelines] Neftebazy i nefteprovody (proektirovanie, stroitel'stvo i ekspluatatsiia); po materialam konferentsii po uluchshceniiu proektirovaniia, stroitel'stva i ekspluatatsii neftebaz i nefteproduktoprovodov. Moskva, Gos. nauchno-tekhn. izd-vo neftianoi i gorno-toplovnoi lit-ry, 1956. 197 p. (MLRA 9:10)

1. Nauchno-tekhnicheskoye obshchestvo neftyanoy promyshlennosti.
(Petroleum--Pipelines)
(Petroleum--Storage)

APPROVED FOR RELEASE: Tuesday, August 01, 2000 CIA-RDP86-00513R0014443

"APPROVED FOR RELEASE: Tuesday, August 01, 2000 CIA-RDP86-00513R001444

MATSKIN, L.A., red.; RATUSH, P.P., red.; YERSHOV, P.R., vedushchiy red.; MUKHINA, E.A., tekhn.red.

[Regulations on the technical operation of tank farms of the Main Administration for the Supply of the National Economy with Petroleum Products of the R.S.F.S.R.] Pravila tekhnicheskoi ekspluatatsii neftebaz Glavneftesnaba RSFSR. Moskva, Gos.nauchno-tekhn.izd-vo neft. i gorno-toplivnoi lit-ry, 1960. 87 p. (MIRA 14:1)

1. Russia (1917- R.S.F.S.R.) Glavnoye upravleniye po transportu i snabzheniyu neft'yu i nefteproduktami.
(Petroleum--Storage)

APPROVED FOR RELEASE: Tuesday, August 01, 2000 CIA-RDP86-00513R0014443

"APPROVED FOR RELEASE: Tuesday, August 01, 2000 CIA-RDP86-00513R001444

L 27998-66 EWP(j)/EWT(m)/T RM

ACC NR: AP6009874 (A) SOURCE CODE: UR/0413/66/000/004/0069/0069

INVENTOR: Savitskiy, A. V.; Skachilova, S. Ya.; Neugodov, P. P.; Ratushenko, G. V.; Arkhipova, Z. V.; Falev, V. M.; Badayev, V. K.

41
B

ORG: none

TITLE: Preparation of polyolefins Class 39, No. 178982. [announced by State Scientific-Research Institute of Polymerization Plastics, Experimental Plant (Gosudarstvennyy nauchno-issledovatel'skiy institut polimerizatsionnykh plastmass, eksperimental'nyy zavod); Central Scientific-Research Laboratory of Reagents (Tsentral'naya nauchno-issledovatel'skaya laboratoriya reaktivov)]

SOURCE: Izobreteniya, promyshlennyye obraztsy, tovarnyye znaki, no. 4, 1966, 69

TOPIC TAGS: olefin, polymerization, polymer

ABSTRACT: An Author Certificate has been issued describing a method of obtaining polyolefins by polymerization of Alpha-olefins in a medium of an inert hydrocarbon solvent with heating in the presence of a catalyst consisting of a mixture of dialkylaluminum chloride and a heavy metal compound. To speed up the process of polymerization and expand the variety of heavy metal compounds, chelate derivatives of orthovanadic acid are suggested under the general formula $VO(OR)(OX)_2$, where R is the hydrogen or alkyl and X is the remainder of the chelating agent. Methylether of vanadium orthohydroxyquindate is the chelate derivative of orthovanadic acid suggested for use. [LD]

SUB CODE: 07,11/ SUBM DATE: 13Aug64 UDC: 678.742

Card 1/1

APPROVED FOR RELEASE: Tuesday, August 01, 2000 CIA-RDP86-00513R0014443

"APPROVED FOR RELEASE: Tuesday, August 01, 2000 CIA-RDP86-00513R001444

MUKHAMEDZYANOV, Sh.S.; RATUSHENKO, Ye.V.

Annual measurements of the thermal field of mazut in earth storage. Trudy NIITransneft' no.1:260-267 '61. (MIRA 16:5)
(Mazut--Thermal properties)

APPROVED FOR RELEASE: Tuesday, August 01, 2000 CIA-RDP86-00513R0014443

"APPROVED FOR RELEASE: Tuesday, August 01, 2000 CIA-RDP86-00513R001444

RATUSHEV, G. S.

USSR/Engineering
Machines, Milling
Screw Threads

Mar 1948

"Complex Thread Milling Cutter," G. S. Ratushev, Engr, B. F. Sevast'yanov, 2 pp

"Stanki i Instrument" No 3

Describes complex thread milling cutter head with adjustable teeth.

76727

APPROVED FOR RELEASE: Tuesday, August 01, 2000 CIA-RDP86-00513R0014443

"APPROVED FOR RELEASE: Tuesday, August 01, 2000 CIA-RDP86-00513R001444

TYUTRIN, F.; RATUSHEVA, R.

For the further strengthening of the collective farm economy. Den. i kred. 20 no.4:75-79 Ap '62. (MIRA 15:4)

1. Starshiy ekonomist Belgorodskoy kontory Gostanka (for Tyutrin).
2. Kreditnyy inspektor Voznesenskogo otdeleniya Gosbanka Nikolayevskoy oblasti (for Ratusheva).
(Collective farms--Finance) (Banks and banking)

APPROVED FOR RELEASE: Tuesday, August 01, 2000 CIA-RDP86-00513R0014443

"APPROVED FOR RELEASE: Tuesday, August 01, 2000 CIA-RDP86-00513R001444

PROCESSES AND PROPERTIES INDEX

a

5

165. Apparatus for Determination of Variation of Wall Thickness of Tubes. (In Russian) O. S. Ratushey and B. F. Sevastyanov. Stanki i Instrument (Machine Tools and Equipment), v. 20, Sept. 1949, p. 28.

Mechanical gaging apparatus.

(B16)

ASM-SLA METALLURGICAL LITERATURE CLASSIFICATION

APPROVED FOR RELEASE: Tuesday, August 01, 2000 CIA-RDP86-00513R0014443

"APPROVED FOR RELEASE: Tuesday, August 01, 2000 CIA-RDP86-00513R001444

BOLOTOVSKIY, V.M.; RATUSHKINA, L.S.

Comparative effects of certain antibiotics on the ornithosis virus in animal experimentation. Vop.virus. 4 no.6:710-713 N-D '59. (MIRA 13:3)

1. Institut virusologii imeni D.I. Ivanovskogo AMN SSSR, Moskva.
(TETRACUCLINE pharmacol.)
(ORNITHOSIS exper.)

APPROVED FOR RELEASE: Tuesday, August 01, 2000 CIA-RDP86-00513R0014443

"APPROVED FOR RELEASE: Tuesday, August 01, 2000 CIA-RDP86-00513R001444

RATUSHKOV, M.I., otv.red.; GRISHAYENKO, M.I., red.izd-va; PROZOROVSKAYA, V.L., tekhn.red.

[Safety problems in coal mines] Voprosy bezopasnosti v ugol'nykh shakhtakh. Moskva, Ugletekhizdat. No.1. 1959. 196 p. (MIRA 12:8)

1. Vostochnyy nauchno-issledovatel'skiy institut po bezopasnosti rabot v gornoy promyshlennosti.
(Coal mines and mining--Safety measures)

APPROVED FOR RELEASE: Tuesday, August 01, 2000 CIA-RDP86-00513R0014443

"APPROVED FOR RELEASE: Tuesday, August 01, 2000 CIA-RDP86-00513R001444

RATUSHKOV, M.I.; ZAKHAROV, A.B.

Prevention of endogenous fires in Kuznetsk Basin mines. Bezop. truda v prom. 4 no.2:4-5 F '60. (MIRA 13:5)

1. Vostochnyy nauchno-issledovatel'skiy institut po bezopasnosti rabot v gornoy promyshlennosti.
(Kuznetsk Basin--Coal mines and mining--Fires and fire prevention)

APPROVED FOR RELEASE: Tuesday, August 01, 2000 CIA-RDP86-00513R0014443

"APPROVED FOR RELEASE: Tuesday, August 01, 2000 CIA-RDP86-00513R001444

RATUSHKOV, M., inzh.

Projects of the Eastern Scientific Research Institute for promoting safety in mine work. Izv. vys. ucheb. zav.; gor. zhur. no. 4:161-162 '61. (MIRA 14:6)

(Kuznetsk Basin--Coal mines and mining--Safety measures)

APPROVED FOR RELEASE: Tuesday, August 01, 2000 CIA-RDP86-00513R0014443

"APPROVED FOR RELEASE: Tuesday, August 01, 2000 CIA-RDP86-00513R001444

RATUSHKOV, M.I.

Improve labor safety in the Kuznetsk Basin mines. Ugol' 36 no.4: 41-42 Ap '61. (MIRA 14:5)

1. Zamestitel' direktora Vostochnogo nauchnogo instituta po nauchnoy chasti.
(Kuznetsk Basin--Coal mines and mining--Safety measures)

APPROVED FOR RELEASE: Tuesday, August 01, 2000 CIA-RDP86-00513R0014443

"APPROVED FOR RELEASE: Tuesday, August 01, 2000 CIA-RDP86-00513R001444

RATUSHKOV, M.I.; MAYEVSKAYA, V.M.; RAFOTSEVICH, A.P.; LYURAY, L.L.

Extinguishing underground fires in coal mines with inert gases. Ugol' 40 no.6:63-64 Je '65. (MIRA 18:7)

1. Vostochnyy nauchno-issledovatel'skiy institut po bezopasnosti rabot v gornoy promyshlennosti (for Ratushkov, Mayevskaya). 2. Kombinat Kuzbassugol' (for Lyuray).

APPROVED FOR RELEASE: Tuesday, August 01, 2000 CIA-RDP86-00513R0014443

"APPROVED FOR RELEASE: Tuesday, August 01, 2000 CIA-RDP86-00513R001444

RATUSHKOV, M.I.; ONTIN, Ye.I.

Results of the work of the Eastern Scientific Research Institute on Dust Control. Vop. bor'. s sil. v Sib. no.1:53-64 '61 (MIRA 16:12)

APPROVED FOR RELEASE: Tuesday, August 01, 2000 CIA-RDP86-00513R0014443

"APPROVED FOR RELEASE: Tuesday, August 01, 2000 CIA-RDP86-00513R001444

KORDYUM, V.A.; LENOVA, L.I.; VAYSBAND, S.M.; RATUSHNAYA, M.Ya. [Ratushna, M.IA.]; PREOBRAZHENSKAYA, L.N. [Preobrazhens'ka, L.N.]; SMIRNOVA, M.N. [Smyrnova, M.N.]

Effect of the removal of metabolites on the growth of Chlorella vulgaris. Mikrobiol. zhur. 27 no.5:23-26 '65.

(MIRA 18:10)

1. Institut mikrobiologii i virusologii AN UkrSSR.

APPROVED FOR RELEASE: Tuesday, August 01, 2000 CIA-RDP86-00513R0014443

"APPROVED FOR RELEASE: Tuesday, August 01, 2000 CIA-RDP86-00513R001444

RATUSHNIKOV, K., mayor

Reduction of the force of water hammer. Tyl i snab.Sov.Voor.Sil 21 no.1:88 Ja '61. (MIRA 14:6)
(Water hammer)

APPROVED FOR RELEASE: Tuesday, August 01, 2000 CIA-RDP86-00513R0014443

"APPROVED FOR RELEASE: Tuesday, August 01, 2000 CIA-RDP86-00513R001444

RATUSHNYAK, N.S.; BONDARENKO, A.I.

Some problems concerning the geological structure and development of the Berezarskoye gas-condensate field. Gaz. delo no.6:3-9 '65. (MIRA 18:8)

1. Krasnodarskiy filial Vsesoyuznogo neftegazovogo nauchno-issledovatel'skogo instituta.

APPROVED FOR RELEASE: Tuesday, August 01, 2000 CIA-RDP86-00513R0014443

"APPROVED FOR RELEASE: Tuesday, August 01, 2000 CIA-RDP86-00513R001444

KIRICHEK, F.F.; RATUSHNYAK, N.S.

Designing lifts for gas and gas-condensate wells. Gaz. delo no.6/7:31-32 '63. (MIRA 17:10)

1. Krasnodarskiy filial Vsesoyuznogo neftegazovogo nauchno-issledovatel'skogo instituta.

APPROVED FOR RELEASE: Tuesday, August 01, 2000 CIA-RDP86-00513R0014443

"APPROVED FOR RELEASE: Tuesday, August 01, 2000 CIA-RDP86-00513R001444

OSTROVSKIY, Semen Moiseyevich; PETRENKO, Yevgeniy Vasil'yevich; KORENEV, Veniamin Grigor'yevich; BOYKO, A.A., retsenzent; BELOSVETOV, A.V., red.; VYSOCHIN, Ye.M., red.; DVOYNIN, A.I., red.; DENISENKO, A.I., red.; LOKSHIN, B.S., red.; MARSHAK, I.S., red.; NAYEROV, R.Ya., red.; NEKRASOVSKIY, Ya.E., red.; RATUSHNYY, A.A., red.; RIPP, M.G., red.

[Handbook for Donets Basin miners] Spravochnik shakhtera Donbassa. Moskva, Izd-vo "Nedra," 1964. 411 p. (MIRA 17:7)

APPROVED FOR RELEASE: Tuesday, August 01, 2000 CIA-RDP86-00513R0014443

"APPROVED FOR RELEASE: Tuesday, August 01, 2000 CIA-RDP86-00513R001444

L 22909-66 EWT(d)/EWP(1) IJP(c)

ACC NR: AP6012700 SOURCE CODE: UR/0119/66/000/004/0010/0011

AUTHOR: Ratushnyy, B. A. (Engineer)

ORG: none

34
B

TITLE: Contactless magnetic memory element 16,

SOURCE: Priborostroyeniye, no. 4, 1966, 10-11

TOPIC TAGS: computer storage, storage device

ABSTRACT: Two variants of a contactless magnetic memory element are described: one with a d-c output and one with an a-c output. Schematics of both are shown in Fig. 1. The elements utilize magnetic cores with rectangular hysteresis loops. The output circuits for both variants consists of two windings W connected in parallel, diode bridge D_1 - D_4, and a voltage feedback circuit consisting of winding W_f limiting resistor R_o, and silicon Zener diode D_5. The input signal is applied to control winding W_c. The Zener voltage must be less than the maximum bias voltage. The circuits have two states, characterized by high and low output voltages. Test models had the following operating parameters: input voltage, 15 v, 400 cps; 50 NP permalloy core dimensions, 30 x 20 x 5 mm; W, 800 turns; W_f, 700 turns; W_c, 230 turns; D_1 - D_4 diodes, type D207; D_5, D808; load resistor R_1 = 620 ohm; limiting resistor,

2

Card 1/2 UDC: 681.142.652

APPROVED FOR RELEASE: Tuesday, August 01, 2000 CIA-RDP86-00513R0014443

"APPROVED FOR RELEASE: Tuesday, August 01, 2000 CIA-RDP86-00513R001444

L 22909-66

ACC NR: AP6012700

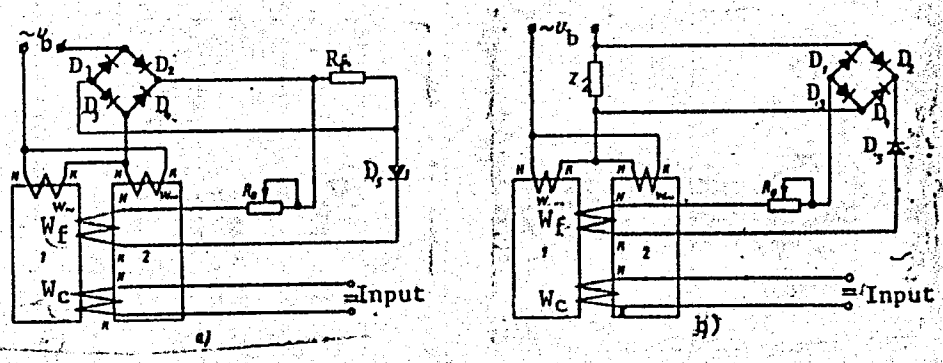

Fig. 1. Contactless magnetic memory element.

a - With d-c output; b - with a-c output.

R_0 = 10 ohm. The output voltages for the two states were 15 and 1 v. Input current (d-c) was 30 mamp. The allowable bias voltage variation for faultless performance was 15 v + 10%, - 20%. The circuits have relatively high output power levels and the power is consumed only during the write and read periods. Orig. art. has: 1 figure. [BD]

SUB CODE: 09/ SUBM DATE: none/ ORIG REF: 001/ ATD PRESS: 4234

Card 2/2

APPROVED FOR RELEASE: Tuesday, August 01, 2000 CIA-RDP86-00513R0014443

"APPROVED FOR RELEASE: Tuesday, August 01, 2000 CIA-RDP86-00513R001444

ZABRONSKIY, Valentin Venediktovich; IVANOV, N.N., kand. tekhn. nauk, prof., retsenzent; VOSKRESENSKIY, N.A., kand. tekhn. nauk, retsenzent; RATUSHNYY, I.V., inzh., red.

[Problems in descriptive geometry] Sbornik zadach po nachertatel'noi geometrii. Moskva, Mashgiz, 1963. 219 p. (MIRA 17:2)

APPROVED FOR RELEASE: Tuesday, August 01, 2000 CIA-RDP86-00513R0014443

"APPROVED FOR RELEASE: Tuesday, August 01, 2000 CIA-RDP86-00513R001444

RATUSHNYAK, I.A.

Modernization of the sound equipment of "X" type motion-picture projectors. Tekh.kino i telev. 4 no.7:68-69 Jl '60. (MIRA 13:7)

(Motion-picture projectors)
(Sound--Recording and reproducing)

APPROVED FOR RELEASE: Tuesday, August 01, 2000 CIA-RDP86-00513R0014443

"APPROVED FOR RELEASE: Tuesday, August 01, 2000 CIA-RDP86-00513R001444

HATUSHNYAK, M.

Apparatus for cutting and bending glass pipes. Mekh. sil'. hosp. 14 no.5:25-26 My '63. (MIRA 16:10)

1. Glavnyy inzh. upravleniya remonta Zakarpatskogo oblastnogo ob"yedineniya "Sil'gosptekhnika."

APPROVED FOR RELEASE: Tuesday, August 01, 2000 CIA-RDP86-00513R0014443

"APPROVED FOR RELEASE: Tuesday, August 01, 2000 CIA-RDP86-00513R001444

BRITVIN, G. (g. Dnepropetrovsk); RATUSHNYY, A., inzhener, (g. Dnepropetrovsk).

Use of the piecework system is not always advisable. Sots. trud no.4: 126-127 Ap '57. (MLRA 10:6)

1. Nachal'nik otdela truda i zarabotnoy platy, zavoda selenovykh vypryamiteley (for Britvin).

(Piecework)

APPROVED FOR RELEASE: Tuesday, August 01, 2000 CIA-RDP86-00513R0014443

"APPROVED FOR RELEASE: Tuesday, August 01, 2000 CIA-RDP86-00513R001444

RATUSHNYY, A., inzhener.

Improve training of mining technicians. Mast.ugl. 6 no.5:20-21 My '57. (MLRA 10:7)

1. Dnepropetrovskiy gornyy institut.
(Mining engineering--Study and teaching)

APPROVED FOR RELEASE: Tuesday, August 01, 2000 CIA-RDP86-00513R0014443

"APPROVED FOR RELEASE: Tuesday, August 01, 2000 CIA-RDP86-00513R001444

RATUSHNYY, A.A., inzh.

Concept of rhythmic work in stope mining and indices for measuring it. Izv. vys. ucheb. zav.; gor. zhur. no.8:55-61 '58. (MIRA 12:5)

1. Dnepropetrovskiy gornyy institut.
(Coal mines and mining) (Mine management)

APPROVED FOR RELEASE: Tuesday, August 01, 2000 CIA-RDP86-00513R0014443

"APPROVED FOR RELEASE: Tuesday, August 01, 2000 CIA-RDP86-00513R001444

RATUSHNYY, A.A., gornyy inzhener

Some shortcomings of an otherwise necessary and useful book ("Industrial organization and planning in the coal industry" by I.G.Siderman. Reviewed by A.A.Ratushnyi). Ugol' Ukr. Vol.3 no.5:45 My '59. (MIRA 12:9)
(Coal mines and mining)

APPROVED FOR RELEASE: Tuesday, August 01, 2000 CIA-RDP86-00513R0014443

"APPROVED FOR RELEASE: Tuesday, August 01, 2000 CIA-RDP86-00513R001444

LOBANOV, D.I.; KATUSHNYY, A.S.

Obtaining ferment preparations from germinated soya seeds for meat tenderizing. Izv.vys.ucheb.zav.; pishch.tekh. no.1:100-103 '64. (MIRA 17:4)

1. Moskovskiy institut narodnogo khozyaystva imeni G.V.Plekhanova, kafedra tekhnologii proizvodstva produktov obshchestvennogo pitaniya.

APPROVED FOR RELEASE: Tuesday, August 01, 2000 CIA-RDP86-00513R0014443

"APPROVED FOR RELEASE: Tuesday, August 01, 2000 CIA-RDP86-00513R001444

L 3087-66

ACCESSION NR: AP5018215 UR/0119/65/000/007/0014/0015
621.318.571

23
B

AUTHOR: Ratushnyy, B. A. (Engineer)

TITLE: Contactless magnetic relay with automatically controlled feedback

SOURCE: Priborostroyeniye, no. 7, 1965, 14-15

TOPIC TAGS: magnetic relay, contactless relay

ABSTRACT: A new contactless magnetic relay (Author's Certificate no. 163677, "Byull. izobr.", 1964, no. 13) is described which is based on a magnetic amplifier having internal and external feedbacks and equipped with an additional feedback winding. A Z sner diode is connected in series with the latter; when conducting, the diode automatically reduces the feedback ratio thereby reducing the relay release current and the width of the relay characteristic loop. Tests of an experimental model revealed these characteristics:

Card 1/2

APPROVED FOR RELEASE: Tuesday, August 01, 2000 CIA-RDP86-00513R0014443

"APPROVED FOR RELEASE: Tuesday, August 01, 2000 CIA-RDP86-00513R001444

L 3087-66

ACCESSION NR: AP5018215

	Conventional relay	New relay
Operation current	8.5	8.5 ma
Release current	15.5	10 ma
Characteristic loop width	7	1.5 ma
Release/Operation currents ratio	0.548	0.85

Orig. art. has: 1 figure, 8 formulas, and 1 table.

ASSOCIATION: none

SUBMITTED: 00 ENCL: 00 SUB CODE: EE, EC

NO REF SOV: 002 OTHER: 000

Card 2/2

APPROVED FOR RELEASE: Tuesday, August 01, 2000 CIA-RDP86-00513R0014443

"APPROVED FOR RELEASE: Tuesday, August 01, 2000 CIA-RDP86-00513R001444

RATUSHNYY, G. D.

Ratushnyy, G. D. -- "On the Physicochemical Essentials of Sealing Wine." Krasnodar Inst of the Food Industry, Chair of the Technology of Viniculture, Krasnodar, 1955 (Dissertation for the Degree of Candidate in Technical Sciences)

SO: Knizhnaya Letopis', No. 23, Moscow, Jun 55, pp 87-104

APPROVED FOR RELEASE: Tuesday, August 01, 2000 CIA-RDP86-00513R0014443

"APPROVED FOR RELEASE: Tuesday, August 01, 2000 CIA-RDP86-00513R001444

RATUSHNYY, G.D.; KOMAROVA, S.N.; LYGINA, N.I.; POGREBYNYAK, E.G.

Application of ion exchange for the acidification of fruit and berry juices. Trudy KIPP no.22:371-374 '61. (MIRA 16:4)
(Fruit juices) (Ion exchange)

APPROVED FOR RELEASE: Tuesday, August 01, 2000 CIA-RDP86-00513R0014443

"APPROVED FOR RELEASE: Tuesday, August 01, 2000 CIA-RDP86-00513R001444

AGABAL'YANTS, G.G.; RATUSHNYYI, G.D.

Applying the ion exchange process in the manufacture of grape juice. Trudy KIPP no.22:304-311 '61. (MIRA 16:4)
(Grape juice) (Ion exchange)

APPROVED FOR RELEASE: Tuesday, August 01, 2000 CIA-RDP86-00513R0014443

"APPROVED FOR RELEASE: Tuesday, August 01, 2000 CIA-RDP86-00513R001444

RATUSHNYY, G.D.; REVA, V.I.

Making semisweet table wines by the method of fermenting juices treated with ion exchange resins. Trudy KIPP no.22:354-360 '61. (MIRA 16:4)

(Wine and winemaking) (Ion exchange resins)

APPROVED FOR RELEASE: Tuesday, August 01, 2000 CIA-RDP86-00513R0014443

"APPROVED FOR RELEASE: Tuesday, August 01, 2000 CIA-RDP86-00513R001444

RATUSHNYY, G.D.

Determining the exchange capacity of ion-exchange resins in winemaking. Trudy KIPP no.22:319-325 '61. (MIRA 16:4)
(Wine and winemaking) (Ion exchange resins)

APPROVED FOR RELEASE: Tuesday, August 01, 2000 CIA-RDP86-00513R0014443

"APPROVED FOR RELEASE: Tuesday, August 01, 2000 CIA-RDP86-00513R001444

RATUSHNYY, G.D.

Use of diatomite in the winemaking industry. Trudy KIPP no.22: 386-396 '61. (MIRA 16:4)
(Wine and winemaking—Filtration)
(Diatomaceous earth)

APPROVED FOR RELEASE: Tuesday, August 01, 2000 CIA-RDP86-00513R0014443

"APPROVED FOR RELEASE: Tuesday, August 01, 2000 CIA-RDP86-00513R001444

RATUSHNYY, G.D.

I-12

USSR/Chemical Technology - Chemical Products and Their Application. Fermentation Industry.

Abs Jour : Ref Zhur - Khimiya, No 1, 1958, 2879

Author : Ratushnyy, G.D.
Inst : -
Title : Use of Diatomite in the Wine Industry.

Orig Pub : Vinodeliye i vinogradarstvo SSSR, 1957, No 4, 24-27

Abstract : It was found that Transcaucasian diatomite from the Akhaltsykhskiy pit can be used without preliminary calcining for clarifying wine by filtration. It is sufficient to grind the diatomite and treat it with dilute H_2SO_4. In the clarification of wine with the use of such diatomite no changes take place in the pH, the content of Fe and cathions that are precipitated by ammonium oxalate, or in the organoleptic properties of the wine.

Card 1/1

APPROVED FOR RELEASE: Tuesday, August 01, 2000 CIA-RDP86-00513R0014443

"APPROVED FOR RELEASE: Tuesday, August 01, 2000 CIA-RDP86-00513R001444

RATUSHNYY, S.A.

Eliminating cracks in prestressed bridge girders. Avt.dor. 19 no.9: 7-8 S '56. (MLRA 9:11)

(Girders)

APPROVED FOR RELEASE: Tuesday, August 01, 2000 CIA-RDP86-00513R0014443

"APPROVED FOR RELEASE: Tuesday, August 01, 2000 CIA-RDP86-00513R001444

BOBROV, P.S., polkovnik meditsinskoy sluzhby; DATSENKO, Ye.M., podpolkovnik meditsinskoy sluzhby; KLEYN, E.G., kand. med. nauk, polkovnik meditsinskoy sluzhby; RATUSHNYY, Ye.A., polkovnik meditsinskoy sluzhby.

Healing of intestinal wounds in acute radiation sickness; experimental morphological studies. Voen. med. zhur. no.4:51-53 Ap '59.
(INTESTINES, wds. & inj. (MIRA 12:8)
healing of exper. wds. in radiation sickness (Rus))
(RADIATIONS, eff.
same)

APPROVED FOR RELEASE: Tuesday, August 01, 2000 CIA-RDP86-00513R0014443

"APPROVED FOR RELEASE: Tuesday, August 01, 2000 CIA-RDP86-00513R001444

RATUSINSKI, Boguslaw; BROCKI, Zygmunt; ORLOWSKI, Boleslaw; PAZDUR, Jan; THOR, Janusz; KOSIEK, Zuzanna; BABICZ, Josef; FURMAN, Stanislaw

Review of books. Kwart hist nauki i tech 9 no. 2: 297-320 '64.

APPROVED FOR RELEASE: Tuesday, August 01, 2000 CIA-RDP86-00513R0014443

"APPROVED FOR RELEASE: Tuesday, August 01, 2000 CIA-RDP86-00513R001444

RATUSINSKI, S.

"71 X 3,000 meters in Jezow."

p. 19 (Slrzudlata Polska) Vol. 14, no. 3, Jan. 1958
Warsaw, Poland

SO: Monthly Index of East European Accessions (EEAI) LC. Vol. 7, no. 4, April 1958

APPROVED FOR RELEASE: Tuesday, August 01, 2000 CIA-RDP86-00513R0014443

"APPROVED FOR RELEASE: Tuesday, August 01, 2000 CIA-RDP86-00513R001444

[illegible], [illegible].

RATUSKY, J.; SOMB, F.
"Quinolizidine Alkaloids. Pt. 3, Synthesis of Three Isometric 3-(-Piperidyl)-Quinolizidines." p. 1053. (Chemicke Listy. Vol. 47, No. 7, July 1953, Praha.)

SO: Monthly List of East European Accessions, Vol. 3, No. 3. Library of Congress, March 1954, Uncl.

APPROVED FOR RELEASE: Tuesday, August 01, 2000 CIA-RDP86-00513R0014443

"APPROVED FOR RELEASE: Tuesday, August 01, 2000 CIA-RDP86-00513R001444

RATUSKY, J.; SORM, F.

Alkaloids derived from quinolizine. Part 3. Synthesis of three stereoisomeric 3-(α-piperidyl)-quinolizidines [in Russian with summary in English]. Sbor.Chekh.khim.rab. 19 no.1:107-117 F '54. (MLRA 7:6)

1. Department of Organic Synthesis, Institute of Organic Chemistry, Czechoslovak Academy of Science, Prague. (Alkaloids) (Quinolizidine)

APPROVED FOR RELEASE: Tuesday, August 01, 2000 CIA-RDP86-00513R0014443

"APPROVED FOR RELEASE: Tuesday, August 01, 2000 CIA-RDP86-00513R001444

RATUSKY, J.; SORM, F.

Alkaloids derived from quinolizine. Part 4. New syntheses of (±)-lupinine (±) epilupinine, (±)-3-lupinine and (±)-3-epilupinine [with summary in English]. Sbor.Chekh.khim.rab. 19 no.2:340-348 Ap '54. (MLRA 7:6)

1. Department of Organic Synthesis, Institute of Organic Chemistry, Czechoslovak Academy of Science, Prague.
(Lupinine)

APPROVED FOR RELEASE: Tuesday, August 01, 2000 CIA-RDP86-00513R0014443

"APPROVED FOR RELEASE: Tuesday, August 01, 2000 CIA-RDP86-00513R001444

RATUSKY, J.

Quinolizine alkaloids. V. Dipole moments and configurations of (±)3-lupinine and (±)3-epilupinine. Josef Ratuský, Arnošt Reiser, and František Šorm (Czech. Akad. Vedy, Prague). *Chem. Listy* 48, 1794-9(1954); cf. *C.A.* 49, 3988f.—From dipole moment measurements (in Debyes) of (±)-*lupinine* m. 59° (3.07 D.), (±)-*epilupinine*, m. 81° (2.30), (±)-*3-lupinine* (Ia), m. 59° (2.83) and (±)-*3-epilupinine* (Ib), m. 30° (2.42), it was deduced that Ia possesses configuration α and Ib configuration β. A new synthesis of Ia and Ib is described. Hydrogenation of 34.3 g. di-Et [2-(2-pyridyl)ethyl]malonate in 40 ml. AcOH and 30 ml. EtOH over 2 g. PtO_2 20 hrs. at normal conditions, evapn. of the solvents, washing of the residue with H_2O and $NaHCO_3$, and extn. with Et_2O gave *di-Et [2-(2-piperidyl)-ethyl]malonate* (II), viscous oil, cyclized to *Et octahydro-4-oxo-3-quinolizinecarboxylate* by distn. Treating 8.9 g. II in 60 ml. H_2O alkalinized to pH 8-10 with Na_2CO_3 with an equiv. amt. of 40% HCHO (2.55 ml.) 2 days at room temp., evapg. the soln. *in vacuo* below 50°, extg. the residue with ether, and evapg. the solvent gave a viscous oil, probably a $HOCH_2$ deriv. of II. Distn. at 180-200° *in vacuo* gave 3.4 g. (36.6%) *Et octahydro-3,3-quinolizinedicarboxylate* (III), $b_{1.5-1.6}$ 125-35°, $b_{0.5}$ 122-3°. Also obtained in 87.5% (3.9 g.) yield by treating 4.28 g. II with 1.44 ml. 40% CH_2O in 9 ml. C_5H_5N. Shaking 5.8 g. III in 50 ml. *N* NaOH at room temp. overnight, neutralizing the soln. with HCl, heating it 3 hrs. on the steam bath, alkalinizing, extg. with Et_2O to remove octahydro-4-oxoquinolizine, acidifying with HCl to Congo red, evapg. *in vacuo*, dissolving the residue in 50 ml. abs. EtOH, satg. the soln. with HCl, repeating the esterification twice more, evapg. the mixt. to dryness, neutralizing the residue with the min. atm. of aq. $NaHCO_3$, adding dry Na_2SO_4, boiling the ppt. several times with Et_2O, evapg. the solvent, and distg. the residue gave 2.5 g. (58%) *Et octahydro-3-quinolizinecarboxylate* (IV), b_9 112-14°.

(over)

APPROVED FOR RELEASE: Tuesday, August 01, 2000 CIA-RDP86-00513R0014443

"APPROVED FOR RELEASE: Tuesday, August 01, 2000 CIA-RDP86-00513R001444

Dissolving 2.8 g. IV in 60 ml. Et_2O, adding 0.8 $LiAlH_4$ in 30 ml. Et_2O, decompg. the mixt. with H_2O, extg. with Et_2O and distg. the ext. gave 1.9 g. (85%) *3-(hydroxymethyl)octahydroquinolizine* (mixt. of Ia and Ib), $b_{0.4}$ 95-7°. In the chromatography over 100 g. alk. Al_2O_3, the petr. ether fractions gave Ia, m. 59°, and the ether fractions yielded Ib, m. 30°. The dielec. consts. were measured at 25°. Also in *Collection Czechoslov. Chem. Communs.* 20, 798-803 (1955) (in English).

M. Hudlický

APPROVED FOR RELEASE: Tuesday, August 01, 2000 CIA-RDP86-00513R0014443

"APPROVED FOR RELEASE: Tuesday, August 01, 2000 CIA-RDP86-00513R001444

RATUSKY, JOSEF.

4

Quinolizine alkaloids. V. Dipole moments and configurations of (±)-3-lupinine and (±)-3-epilupinine. Josef Ratusky, Arnošt Reiser, and František Šorm. Collection Czechoslov. Chem. Communs. 20, 798-803(1955) (in English). —See C.A. 49, 14780i. E. J. C.

(2)

APPROVED FOR RELEASE: Tuesday, August 01, 2000 CIA-RDP86-00513R0014443

"APPROVED FOR RELEASE: Tuesday, August 01, 2000 CIA-RDP86-00513R001444

Cardiovascular Diseases

CZECHOSLOVAKIA UDC 616.127-005.4-079.2

MALEK, P.; VAVREJN, B.; RATUSKY, J.; KOLC, J.; KRONRAD, L.; Institute of Clinical and Experimental Surgery (Ustav Klinicke a Experimentalni Chirurgie), Prague - Krc, Director (Reditel) Prof Dr B. SPACEK; Research Institute for Medical Application of Radioisotopes (Vyzkumny Ustav pro Vyuziti Radioizotopu v Lekarstvi), Prague, Director (Reditel) Dr B. VAVREJN; Institute of Organic Chemistry and Biochemistry, Czechoslovak Academy of Sciences (Ustav Organicke Chemie a Biochemie CSAV), Prague, Director (Reditel) Member of Academy F. SORM; Institute of Nuclear Research (Ustav Jaderneho Vyzkumu) Rez near Prague, Director (Reditel) Dr V. SVAB.

"Further Advances in Topical Diagnosis of Ischemic Lesions of the Myocardium in Vivo."

Prague, Casopis Lekaru Ceskych, Vol 105, No 47, 25 Nov 66, pp 1273 - 1278

Abstract /Authors' English summary modified 7: For the diagnosis of ischemic lesions mercury derivatives of the fluorescein line (Hg 203 or Hg^{167}) are recommended. These derivatives have better RI and RII indexes (torn to normal muscle, torn muscle to blood)

APPROVED FOR RELEASE: Tuesday, August 01, 2000 CIA-RDP86-00513R0014443

"APPROVED FOR RELEASE: Tuesday, August 01, 2000 CIA-RDP86-00513R001444

S/275/63/000/002/013/032
D405/D301

AUTHORS: Ratusky, J., Sorm, F. and Ulbert, K.

TITLE: Method of preparation of organic semiconductors

PERIODICAL: Referativnyy zhurnal, Elektronika i eye primeneniye, no. 2, 1963, 15, abstract 2B96 P (Chekhosl. pat. kl. 120, 26/01, no. 100972, 15. 09. 61 (Czechoslovak patent))

TEXT: A method is proposed for the preparation of high-molecular semiconductor compounds by thermal decomposition of salts of acetylene-carbonic and polyacetylene-carbonic acids, followed by aqueous extraction of the decomposition products and drying. As an example, the decomposition of non-aqueous acetic acetylene-dicarbonate is described, which is neutralized by acetylene-dicarbonic acid. The decomposition is carried out at 285-295°C. After cooling, the obtained mass is triturated, washed with water, filtered and dried. The electrical conductivity of the obtained material is $0.7 \cdot 10^{-4}$ $ohm^{-1} \cdot cm^{-1}$ at 20°C.

[Abstracter's note: Complete translation]

Card 1/1

APPROVED FOR RELEASE: Tuesday, August 01, 2000 CIA-RDP86-00513R0014443

"APPROVED FOR RELEASE: Tuesday, August 01, 2000 CIA-RDP86-00513R001444

S/081/62/000/023/108/120
B101/B186

AUTHORS: Ratusky, Josef, Šorm, František, Ulbert, Karel

TITLE: Method of producing organic substances having the properties of electric semiconductors

PERIODICAL: Referativnyy zhurnal. Khimiya, no. 23, 1962, 742, abstract 23P476 (Czechosl. pat. 100972, September 15, 1961)

TEXT: Polymeric organic substances of the semiconductor type are obtained by thermal decomposition of inorganic salts of acetylene carboxylic or polyacetylene carboxylic acids, followed by separation from the inorganic salt by boiling with inorganic acids, or by leaching out with water and using the carbonate dissolved in filtrate to neutralize the acetylene carboxylic acid when producing the initial monomer. Example: 50.5 g anhydrous powdery acetylene dicarboxylic K (I), obtained by neutralizing the acetylene dicarboxylic acid, is heated to 285 - 295°C. The resulting mass is cooled, pulverized, leached out with water, and filtered; after drying in air, 5.19 g powder is obtained, the conductivity of which is

Card 1/2

APPROVED FOR RELEASE: Tuesday, August 01, 2000 CIA-RDP86-00513R0014443

"APPROVED FOR RELEASE: Tuesday, August 01, 2000 CIA-RDP86-00513R001444

S/081/62/000/023/108/120
B101/B186

Method of producing organic...

$0.7 \cdot 10^{-4}$ $ohm^{-1} \cdot cm^{-1}$ at 20°C, and $1.4 \cdot 10^{-2}$ $ohm^{-1} \cdot cm^{-1}$ at 300°C. The filtrate is used for producing I. When 5% by weight of $CdCl_2$ is used as catalyst, I thermally decomposes at 385 - 400°C. [Abstracter's note: Complete translation.]

Card 2/2

APPROVED FOR RELEASE: Tuesday, August 01, 2000 CIA-RDP86-00513R0014443

"APPROVED FOR RELEASE: Tuesday, August 01, 2000 CIA-RDP86-00513R001444

RATUSKY, JOSEF

Distr: 4E2c(j) 1

3

JAJ(NB)(may)

1

Manufacturing terephthalic acid by thermal rearrangement of isomers. Josef Ratuský and František Šorm. Czech. 91,605, Sept. 15, 1959. Dry K isophthalate (I) (48.4 g.) and 2 g. Fe powder heated quickly in an autoclave with 30 atm. CO_2 to 450–60°, the temp. kept 30 min., the light gray powd. material extd. with 3 l. hot water, the catalyst filtered off, the clear hot filtrate treated with HCl, the white ppt. sepd., boiled with water 4 times, filtered, and dried 10 hrs. at 140°/10 mm. gave 30 g. terephthalic acid (II), which yielded a di-Me ester, m. 140°. Other examples featured powd. Zn and Cu as catalysts, temp. 410–500°, and mixts. of I, II, and K phthalate as starting materials. L. J. Urbánek

GK

APPROVED FOR RELEASE: Tuesday, August 01, 2000 CIA-RDP86-00513R0014443

"APPROVED FOR RELEASE: Tuesday, August 01, 2000 CIA-RDP86-00513R001444

RATUSKY, J

Isolating methyl p-toluate from its mixtures with methyl o-toluate. [illegible] Czech. 87,700, Oct. 15, 1958. The first 30 g. from a 200-g. mixt. contg. 65% p-isomer and 35% o-isomer distd. with a 30-plate column, the residue crystallized 6 hrs. at −8°, and the sepd. crystals centrifuged at room temp. at 750 r.p.m. 1 min. gives 121 g. pure cryst., p-isomer, m. 34°. L. J. Urbánek

2
4E3d
2 gg (NB)

bc
1/1

gg

APPROVED FOR RELEASE: Tuesday, August 01, 2000 CIA-RDP86-00513R0014443

"APPROVED FOR RELEASE: Tuesday, August 01, 2000 CIA-RDP86-00513R001444

G-1

COUNTRY : Czechoslovakia
CATEGORY : Organic Chemistry--Theoretical organic chemistry

17726

ABS. JOUR. : RZKhim., No. 5 1960, No.

AUTHOR : Ratusky, J. and Sorm, F.
INST. : Not given
TITLE : On the Mechanism of the Rearrangement of Potassium Phthalate and of the Carboxylation of Potassium Benzoate

ORIG. PUB. : Collection Czechoslov Chem Commun, 24, No 8, 2553-2559 (1959); Chem Listy, 52, No 12, 2328-2333 (1958)

ABSTRACT : The mechanism of the rearrangement of K phthalate (I) to K terephthalate (II) and of the carboxylation of K benzoate (III) with the formation of II has been investigated. The rearrangement of I under an atmosphere of $C^{14}O_2$ gives active II. The heating of I with $C^{14}O_2$ to the reaction temperature in the absence of the catalyst or with the catalyst but at a lower temperature does not give active II. II labeled with C^{14} in the carboxyl group practically does not lower the activity in an atmosphere

CARD: 1/4

156

APPROVED FOR RELEASE: Tuesday, August 01, 2000 CIA-RDP86-00513R0014

G-1

CATEGORY :

17726

ABS. JOUR. : RZKhim., No. 5 1960, No.

AUTHOR :
INST. :
TITLE :

ORIG. PUB. :

ABSTRACT : of CO_2 [sic], from which the authors conclude that the reaction I → II proceeds as an intermolecular reaction with the participation of the CO_2 atmosphere. It is hypothesized that the reaction begins with the ionization of I to give a carbanion (IV) with an unshared pair of electrons in the ortho-position to the carboxyl group and K^+; IV rearranges into the more stable isomer with an unshared electron pair in the para-position (V), which subsequently adds CO_2 and K^+ to give II.

CARD: 2/4

"APPROVED FOR RELEASE: Tuesday, August 01, 2000 CIA-RDP86-00513R001444

RATUSKY, J

4
2 May

/ **Mechanism of the rearrangement of potassium phthalate and carboxylation of potassium benzoate.** Josef Ratusky and František Sorm (Československ. akad. věd, Prague). *Chem. listy* 52, 2328-33(1958).—Heating equimolar amts. of $C_6H_4(CO)_2O$ and $K_2C^{14}O_3$ with 10% powd. Zn 60 min. to 405° in a sealed tube in an autoclave yielded p-$C_6H_4(CO_2H)_2$ (I) contg. approx. 50% of the specific activity of CO_2 used in the reaction. Heating similarly an equimolar mixt. of Bz_2O, $K_2C^{14}O_3$, and Zn 30 min. to 410-25° gave I contg. 65.5% and $PhCO_2H$ contg. 33.5% act. ity. On the basis of this evidence as well as of expts. with changed conditions, the authors suggest that in the course of thermal rearrangement of K phthalate only 1 CO_2H group of its mol. undergoes statistical exchange with CO_2 from the reaction atm. In the carboxylation of $PhCO_2K$ a fast reaction primarily results in statistical exchange of the benzoate CO_2H with labeled CO_2 and the carboxylation proceeds in the further step with benzoate already labeled with C^{14}. Reaction mechanisms are discussed. L. J. Urbánek

Distr: 4E2c(j)

APPROVED FOR RELEASE: Tuesday, August 01, 2000 CIA-RDP86-00513R0014443

"APPROVED FOR RELEASE: Tuesday, August 01, 2000 CIA-RDP86-00513R001444

RATUSKY, J.

Some outstanding Soviet works in the field of the chemistry of alkaloids. p. 751. (Sovetska Veda: Chemie, Vol. 6, No. 5, 1956, Praha, Czechoslovakia)

SO: Monthly List of East European Accessions (EEAL) LC, Vol. 6, No. 8, Aug 1957. Uncl.

APPROVED FOR RELEASE: Tuesday, August 01, 2000 CIA-RDP86-00513R0014443

"APPROVED FOR RELEASE: Tuesday, August 01, 2000 CIA-RDP86-00513R001444

CZECHOSLOVAKIA / Organic Chemistry. Synthetic Organic Chemistry. G

Abs Jour : Ref. Zhur. - Khimiya, No. 15, 1958, No. 50339

Author : Ratusky, Josef; Sorm, Frantisek

Inst : -

Title : Reactions of Diazoketones. II Reactions of WO-diazoacid Esters With Indole and N-methyl-pyrrole.

Orig Pub : Chem. Listy, 1957, 51, #6, 1091-1100.

Abstract : Ethyl (Ia) and methyl (Ib) diazopyroacetate, as well as ethyl γ-diazoacetoacetate (II) and δ-diazolevullinate (III) were synthesized. The reactions of these compounds with indole (IV) and with methyl pyrrole (V), in presence of Cu, were studied. In both cases substitution of H by an ester radical takes place with elimi-

Card 1/7

CZECHOSLOVAKIA / Organic Chemistry. Synthetic Organic Chemistry. G

APPROVED FOR RELEASE: Tuesday, August 01, 2000 CIA-RDP86-00513R0014

Abs Jour : Ref. Zhur. - Khimiya, No. 15, 1958, No. 50339

nation of N_2, examples in (IV) in the 3rd position, and in (V) in the 2nd position. The structure of diazo compounds (DC) was proven by reactions with hydrogen halides, CH_3COOH and by Wolf's rearrangement. DC were synthesized by stirring an ether solution of CH_2N_2 with a corresponding ester chloride for 30 min., at -5 to -8°. Listed below are: % yield, M.P. in °C, or B.P. °C/mm and derivative: Ia, 90.2, 73-74, ethoxyallyl chloride; Ib, 90, 103-105, methoxyallylchloride; II, 77, 70/0.05, $C_2H_5OCOCH_2$-COCl; III 82, 75/0.01, $C_2H_5OCOCH_2CH_2COCl$. Reaction with IV was accomplished by introducing DC into a solution of IV in the presence of Cu (85-95°C, 5-10 min.). From a solution of I in

Card 2/7

"APPROVED FOR RELEASE: Tuesday, August 01, 2000 CIA-RDP86-00513R001444

CZECHOSLOVAKIA / Organic Chemistry. Synthetic Organic Chemistry. G

Abs Jour : Ref. Zhur. - Khimiya, No. 15, 1958, No. 50339

over Al_2O_3. Upon boiling of the latter (1 hour) with a 30% KOH 3-indolyl acetate, M.P. 165° was formed. III in cyclohexane led to ethyl δ-3 (indolyl)-levullinate, 86% yield. Oxication with O_2 yielded indole carboxylic-3 acid, detected by chromatography on paper. Reactions of V are analogous, but take from 0.5 - 2 hours (the extent of reaction being determined by the quantity of liberated N_2). I without a solvent yielded ethyl 2- (N-methyl pyroyl) pyroacetoacetate, 39% yield B.P. 110°/0.25mm which yielded with a 3N NaOH 2-(N-methylpyroyl) pyroacetate, M.P. 112°. From II in cyclohexane may be obtained ethyl γ-(2-N-methyl pyroyl)-acetoacetate, 23.2% yield, B.P. 90°/0.5 mm. Heating of the latter for 15

Card 4/7

APPROVED FOR RELEASE: Tuesday, August 01, 2000 CIA-RDP86-00513R0014443

"APPROVED FOR RELEASE: Tuesday, August 01, 2000 CIA-RDP86-00513R001444

CZECHOSLOVAKIA / Organic Chemistry. Synthetic Organic Chemistry. G

Abs Jour : Ref. Zhur. - Khimiya, No. 15, 1958, No 50339

min. resulted in the formation of 2-N-methyl-pyroylacetone, (semicarbazone), M.P. 166°. III in C_6H_6 yielded ethyl δ -2-N-methylpyoryl levullinate, 65.8% yield, B.P. 114°/0.2 mm. In order to prove the structure of DC the following compounds were synthesized: methyl ethyl chlor-opyroacetate from Ib and HCl (g) in CH_3OH, 94.5% yield, B. P. 78°/13 mm which with a 35% HCl (acid) gave chloropyroacetic acid, M.P. 57°; ethyl bromopyroacetate, B.P. 87°/9 mm, obtained by shaking Ia in ether with a 40% HBr. At the same time bromopyroacetic acid, M.P. 75° was formed. By analogy, II and HCl (g) yielded ethyl δ-chloroacetoacetate, 66.5% yield, B.P. 95°/10 mm, n^{20} D 1,4550 (tea. gas), while II

Card 5/7

APPROVED FOR RELEASE: Tuesday, August 01, 2000 CIA-RDP86-00513R0014443