"APPROVED FOR RELEASE: 07/19/2001 CIA-RDP86-00513R001445520020-8

Hydraulic presses. S/771/61/000/000/006/006

hydraulic cylinders are far in excess of those determined by elementary static theory (which is briefly outlined). Safety factors of 3 to 3.5 are employed. Tough, high-grade, C steels are utilized (e.g., steel 35), also low-alloyed Ni or NiMo steels, for liquid pressures between 200 and 450 kg/mm^2. At higher pressures high-alloy steels are employed. Preference is expressed for cylinders of readily weldable steels (such as steel 35), especially since repair and replacement work is unavoidable in press work which entails fatigue-producing pulsating operation. Furthermore, the dimensions of a press are determined by its column and entablature geometry, so that there is no need to minimize the size of the cylinders and increase the hydraulic pressure and attendant stress problems therein. The energy losses attributable to the elastic deformation of the press are assessed, and the advisability of relatively low pressures is further substantiated. Attention is drawn to the TsNIITMash method for the determination of the basic geometry of a HP. Shortcomings in electric heating and lubricating equipment are mentioned. The effects of elastic deformation of the press on the accuracy of wing-element forgings is analyzed theoretically; experimental findings by TsNIITMash on a 30,000-ton Schleemann HP are tabulated. The fatigue problem is briefly appraised; USSR experience with the first 10,000-ton HP evinced fatigue failures after service periods ranging from 1,800,000 cycles for the upper column nut to 4,500,000 cycles for components of the base strcture. The problem of preventing warping in the

Card 2/4

APPROVED FOR RELEASE: 07/19/2001 CIA-RDP86-00513R001445520020-8"

"APPROVED FOR RELEASE: 07/19/2001 CIA-RDP86-00513R001445520020-8

S/771/61/000/000/006/006

Hydraulic presses.

press forming of panels is mentioned. Following a brief discussion of the problem of truing-up the slab edges and widths in hot strip mills, the new hydraulic slab squeezer developed by TsNIITMash jointly with the New Kramatorsk plant is described and depicted (general-view photo and 2-page fold-out cross-section). The slab is held by a vertical hydraulic clamp and is squeezed by two hydraulically driven horizontal heads. The squeezer can use the low-pressure (80-at) hydraulic pump-and-accumulator system of the strip mill by means of a pressure multiplicator. Maximal squeezing force: 1,800 t; distance between heads: 650 - 1,755 mm; combined stroke: 240 mm. The fundamental layout of the hydraulic system of a HP is explained, including pump-type, mechanical, and steam-or-air multiplicators. There is a global trend away from steam drive toward pump-and-accumulator (P-A) drive in forging presses. The first 6,000-t press with P-A drive in the USSR was built by Uralmashzavod in 1956-57. However, the further adoption of this type of drive in the USSR has been slowed down by the absence of specialized factories capable of producing powerful plunger-type high-pressure pumps and control equipment for pump-type presses. Design-criterial tabulations for the selection of pump parameters including a breakdown of energy utilization in a press system are given in an over-full-page-size table for presses employed for three different purposes. Motor-to-hydraulic-pump clutches are discussed in some detail; the additional cost of a combined coupling system (hydraulic plus friction clutch) is

Card 3/4

APPROVED FOR RELEASE: 07/19/2001 CIA-RDP86-00513R001445520020-8"

"APPROVED FOR RELEASE: 07/19/2001 CIA-RDP86-00513R001445520020-8

Hydraulic presses. S/771/61/000/000/006/006

hydraulic cylinders are far in excess of those determined by elementary static theory (which is briefly outlined). Safety factors of 3 to 3.5 are employed. Tough, high-grade, C steels are utilized (e.g., steel 35), also low-alloyed Ni or NiMo steels, for liquid pressures between 200 and 450 kg/mm^2. At higher pressures high-alloy steels are employed. Preference is expressed for cylinders of readily weldable steels (such as steel 35), especially since repair and replacement work is unavoidable in press work which entails fatigue-producing pulsating operation. Furthermore, the dimensions of a press are determined by its column and entablature geometry, so that there is no need to minimize the size of the cylinders and increase the hydraulic pressure and attendant stress problems therein. The energy losses attributable to the elastic deformation of the press are assessed, and the advisability of relatively low pressures is further substantiated. Attention is drawn to the TsNIITMash method for the determination of the basic geometry of a HP. Shortcomings in electric-heating and lubricating equipment are mentioned. The effects of elastic deformation of the press on the accuracy of wing-element forgings is analyzed theoretically; experimental findings by TsNIITMash on a 30,000-ton Schlesmann HP are tabulated. [illegible]

APPROVED FOR RELEASE: 07/19/2001 CIA-RDP86-00513R001445520020-8"

"APPROVED FOR RELEASE: 07/19/2001 CIA-RDP86-00513R001445520020-8

ROZHKOV, V.M.; SHOFMAN, L.A.; ROZANOV, B.V.; KUZ'KO, Yu.P.; PONGIL'SKIY, N.F.; LIVANOV, V.A.; LUCHIN, V.V.; KUZNETSOV, K.I.; TSYPER, V.A.; CHERNOSHTAN, V.K.

Points for pipe presses. Biul.TSIICHM no.9:52 (MIRA 15:4)
(Pipe mills--Equipment and supplies)

APPROVED FOR RELEASE: 07/19/2001 CIA-RDP86-00513R001445520020-8"

"APPROVED FOR RELEASE: 07/19/2001 CIA-RDP86-00513R001445520020-8

ROZANOV, B.V.; LINTS, V.P.

Hydrodynamics and the control system for powerful forging presses. Kuz.-shtam. proizv. 3 no.11:32-35 N '61. (MIRA 14:11)
(Hydraulic presses) (Hydraulic control)

APPROVED FOR RELEASE: 07/19/2001 CIA-RDP86-00513R001445520020-8"

"APPROVED FOR RELEASE: 07/19/2001 CIA-RDP86-00513R001445520020-8

29375
S/182/61/000/011/005/005
D038/D113

1.1310

AUTHORS: Rozanov, B. V. and Lints, V. P.

TITLE: Hydrodynamics and the system control of high-power stamping presses

PERIODICAL: Kuznechno-shtampovochnoye proizvodstvo, no. 11, 1961, 32-35

TEXT: The article deals with investigations on high-power press installations, and theoretical research on press hydrodynamics used for the development of hydraulic systems of high-power stamping presses. The authors discuss hydraulic systems operating at several power stages. In these systems two groups of compensating cylinders are built into the press working cylinders. The compensating cylinders are fed by two independent main pipes. The hydraulic actuator of the press comprises two sections: one with a 200 kg/cm^2 pressure and another with 300 kg/cm^2 pressure, thus creating two power stages. It is stated that the new hydraulic system considerably reduces the pressure drop in the pipeline, the extent of hydraulic jump, and the degree of cavitation in the control system. One such hydraulic system recently developed was used in a multi-cylinder press in which the valves of the water distributor in the working cylinders were pressure controlled.

Card 1/2

APPROVED FOR RELEASE: 07/19/2001 CIA-RDP86-00513R001445520020-8"

"APPROVED FOR RELEASE: 07/19/2001 CIA-RDP86-00513R001445520020-8

29375
S/182/61/000/011/005/005
D038/D113

Hydrodynamics and the system control ...

TsNIITMASh conducted investigations on the cavitation stability of materials. The following steel grades were recommended for valve parts: ШХ 15 (ShKh15) and 9Х (9Kh) tool steels; ЭСХ8 (ESKh8) and ЭЖ3 (EZh3) high-chromium steels, and ЭЯ 2 (EYa2) austenitic steel best suited for large valves. The investigations were supervised by G. I. Babushkina and M. G. Timerbulatov. N. Ye. Zhukovskiy is mentioned in connection with the so-called equations of hydraulic jump. The authors conclude that it was possible to use automatic electric controls in multi-cylinder presses using the new hydraulic systems, and that the main valves could be made more durable if the valves could be opened at an increased counterpressure, with a resulting reduction in the cavitation of flow. There are 2 figures and 2 Soviet-bloc references.

Card 2/2

APPROVED FOR RELEASE: 07/19/2001 CIA-RDP86-00513R001445520020-8"

"APPROVED FOR RELEASE: 07/19/2001 CIA-RDP86-00513R001445520020-8

ROZANOV, B.V.; LINTS, V.P.

Automatic correction of the warping of hydraulic forging press traverses. Kuz.-shtam. proizv. 3 no.6:38-43 Je '61. (MIRA 14:6)

(Hydraulic presses--Maintenance and repair)

APPROVED FOR RELEASE: 07/19/2001 CIA-RDP86-00513R001445520020-8"

"APPROVED FOR RELEASE: 07/19/2001 CIA-RDP86-00513R001445520020-8

ROZANOV, B.V., kand.tekhn.nauk

Present state and future development of heavy hydraulic press equipment. Vest.mash. 41 no.7:54-58 Jl '61. (MIRA 14:6)
(Hydraulic presses)

APPROVED FOR RELEASE: 07/19/2001 CIA-RDP86-00513R001445520020-8"

"APPROVED FOR RELEASE: 07/19/2001 CIA-RDP86-00513R001445520020-8

27724
S/122/61/000/007/006/007
D209/D304

1 1310 also 1454

AUTHOR: Rozanov, B.V., Candidate of Technical Sciences

TITLE: An investigation of the present and future development of heavy hydraulic presses

PERIODICAL: Vestnik mashinostroyeniya, no. 7, 1961, 54 - 58

TEXT: Post-war development of transportation, metallurgy and other aspects of machine design have made heavy demands on the development of heavy hydraulic presses. Presses with capacities ranging from 10,000 tons to 20,000 tons were built for the hot punching of rubber, the production of large diameter tubes from sheet material and for producing sheets for high pressure vessels. New design methods were discovered which increased the capacity and size of these presses without involving heavy parts. The heavy machine construction industry achieved this by using welded parts instead of heavy castings. Today the size of the job and the capacity of the machines are almost irrelevant factors due to the advancement made

Card 1/4

APPROVED FOR RELEASE: 07/19/2001 CIA-RDP86-00513R001445520020-8"

"APPROVED FOR RELEASE: 07/19/2001 CIA-RDP86-00513R001445520020-8

27724
S/122/61/000/007/006/007
D209/D304

An investigation of the ...

in the industry. Carbon and special alloy steels are used for the manufacture of welded components of a max. thickness of 1000 mm. The rapid development in heat resisting alloys also demanded presses with higher pressures, more accuracy and increased efficiency. The designers aimed to produce hydraulic presses made of parts whose characteristics are large sizes, thin walls (for lightness) and with structures strengthened by webs. All these factors contribute to making the structure more solid, resulting in the more accurate machining of expensive highly heat resisting alloys. A very successful small press manufactured by a Siberian factory is mentioned and illustrated. This press is capable of developing 30 to 50 tons and giving a great degree of accuracy due to the application of two guiding pistons. Small, one cylinder presses also proved to be successful. Their components were made of high alloy steels and the oil pressure used was approx. 1000 kg/cm^2. Reinforced concrete was also used for manufacture of hydraulic presses facilitating the development of high forces and reducing the manufacturing time. Horizontal presses are also gaining popularity in

Card 2/4

APPROVED FOR RELEASE: 07/19/2001 CIA-RDP86-00513R001445520020-8"

"APPROVED FOR RELEASE: 07/19/2001 CIA-RDP86-00513R001445520020-8

S/122/61/000/007/006/007
D209/D304

An investigation of the ...

the USSR and are used for forging articles made of steel, titanium beryllium and many other heat-resisting alloys. It is thought advisable to provide these presses with a powerful mandrel having an independent drive so that it can be used for manufacturing tubes of various cross-sections and for other items of complex shape. The above presses are also suited for manufacture of tubes with horizontal internal webs. Presses used for "black metals" must operate at a high speed and with a very short stroke. To achieve this piping of large cross-section should be used. To avoid the cooling of the work piece the distance between the oven and press must be made as small as possible. This is achieved by using overhead conveyor systems which are already in use for the manufacture of steel and titanium alloy articles. Inadequate attention is paid to transportation facilities in workshops. The mechanization and automation of various processes using hydraulic presses could lead to a great reduction in costs. The author proceeds to deal with various driving mechanisms of hydraulic presses. These are pumps delivering oil at pressures 200-320 kg/cm^2 and an output of approx.

Card 3/4

APPROVED FOR RELEASE: 07/19/2001 CIA-RDP86-00513R001445520020-8"

"APPROVED FOR RELEASE: 07/19/2001 CIA-RDP86-00513R001445520020-8

27724
S/122/61/000/007/006/007
D209/D304

An investigation of the ...

5000 l/min. To raise the speed and output of these presses, automatic control of various manufacturing processes has been introduced. The author concludes that the design of heavy hydraulic presses and their associate equipment differs to a great extent from those of a smaller type, and so specialization in this field is inevitable. There are 2 figures and 4 references: 3 Soviet-bloc and 1 non-Soviet-bloc. The reference to the English-language publication reads as follows: F.T. Altmann, "Contour Rolling of Temperature - resistant Aircraft Components", Machinery (l.), September 14, 1956.

Card 4/4

APPROVED FOR RELEASE: 07/19/2001 CIA-RDP86-00513R001445520020-8"

"APPROVED FOR RELEASE: 07/19/2001 CIA-RDP86-00513R001445520020-8

ROZANOV, B.V.

PHASE I BOOK EXPLOITATION SOV/5440

Moscow. Stankoinstrumental'nyy institut.

Issledovaniya v oblasti shtampovochnogo proizvodstva; sbornik No. 5 (Investigations of Die-Forging Processes; Collection of Articles no. 5) Moscow, Mashgiz, 1960. 175 p. 2,500 copies printed.

Sponsoring Agency: Moskovskiy stankoinstrumental'nyy institut imeni I.V. Stalina. Kafedra "Oborudovaniye i tekhnologiya kovki i shtampovki."

Ed. (Title page): V.T. Meshcherin, Doctor of Technical Sciences, Professor; Ed. of Publishing House: Yu.L. Markiz; Tech. Ed.: V.D. El'kind and L.P. Gordeyeva; Managing Ed. for Literature on Hot-Processed Metals: S.Ya. Golovin, Engineer.

PURPOSE: This collection of articles is intended for engineers and technical personnel in the field of die forming.

COVERAGE: The articles are concerned, in general, with the question of increasing productivity and accuracy in die forming and simultaneously decreasing metal

Investigations of Die-Forging Processes (Cont.) SOV/5440

consumption. The following are also discussed: increasing the accuracy in determining individual process parameters; the fundamentals of new, highly productive stamping processes; the strength and rigidity of press frames; the effect of the kinematic parameters of mechanisms and fluid drives on the productivity of presses; and the improvement of heating-furnace performance. The articles are based on the results of scientific research investigations performed in recent years at the Department of Forging and Stamping Equipment and Processes of the Moscow Institute of Machine Tools and Instruments imeni V.I. Stalin. Most of the research and experimental work carried out at the Department's laboratory has been directed toward an increased productivity and accuracy of stamping operations and thus a more economical use of metal. No personalities are mentioned. References accompany individual articles. There are 46 references: 42 Soviet and 4 German.

Anikeyev, A.G. [Candidate of Technical Sciences, Docent]. Determining the Cam Parameters for Automatic Cold-Upsetting Presses 76

Storozhev, M.V. [Candidate of Technical Sciences, Docent]. Flexure of Hydraulic-Press Columns 95

Rozanov, B.V. [Candidate of Technical Sciences, Docent], and M.D. Hirles [Engineer]. The Effect of the Elasticity of a Hydraulic-Press System [Oil and Construction] on the Speed Characteristics of the Press 126

Sinitskiy, V.N. [Engineer]. The Action of the Valves of a Crank-Type Plunger Pump for a Hydraulic-Press Drive 135

Lasenkov, M.A. [Candidate of Technical Sciences, Docent]. Automatic Regulation of the Thermal Regime of Heating Furnaces 157

APPROVED FOR RELEASE: 07/19/2001 CIA-RDP86-00513R001445520020-8"

"APPROVED FOR RELEASE: 07/19/2001 CIA-RDP86-00513R001445520020-8

ROZANOV, B.V., kand.tekhn.nauk, dots.; MIRLES, M.D., inzh.

Effect of elasticity of a hydraulic press system on its speed characteristics. Sbor. MOSSTANKIN no. 5:126-134 '60. (MIRA 14:2)

(Hydraulic presses)

APPROVED FOR RELEASE: 07/19/2001 CIA-RDP86-00513R001445520020-8"

"APPROVED FOR RELEASE: 07/19/2001 CIA-RDP86-00513R001445520020-8

S/182/61/000/006/006/007
D038/D112

AUTHORS: Rozanov, B.V., Lints, V.P.

TITLE: Automatic elimination of skew in the cross beam of hydraulic presses

PERIODICAL: Kuznechno-shtampovochnoye proizvodstvo, no. 6, 1961, 38-43

TEXT: A hydraulic system has been developed by VNIIMETMASh in cooperation with NKMZ for maintaining the cross beams of heavy hydraulic stamping presses in a horizontal position under assymetrical loads. The maximum tilt of the cross beam is 0.17 mm/m when pressure force is 0.6 m off-center. The system principle is illustrated in a diagram (Fig. 2). It includes piston cylinders (1) placed in the press frame corners. The piston rods are connected with cross beam, and the top and bottom spaces of the cylinders are so interconnected that the top space of one cylinder is connected with the bottom space of the other. Thus the tilt of the cross beam causes a pressure difference within the cylinder spaces, and correspondingly a counteracting moment. The cylinders are kept under a constant pressure of 160 kg/cm^2. Steol (46.3% glycerin + 19.2% alcohol, the rest water and about 2% anticorrosive additions) is used as the work fluid. The steol has an elas-

Card 1/3

APPROVED FOR RELEASE: 07/19/2001 CIA-RDP86-00513R001445520020-8"

"APPROVED FOR RELEASE: 07/19/2001 CIA-RDP86-00513R001445520020-8

S/182/61/000/006/006/007
D038/D112

Automatic elimination of skew ...

ticity modulus $E = 3.45 \cdot 10^4$ kg/cm^2, i.e. 2.5 times as high as that of spindle oil. Throttle valves (2) are placed in the pressure pipelines leading to the outer work cylinders of the press to produce high countermoments during the work stroke. The throttle valve closes at cross beam tilt, pressure in the work cylinder on the opposite side drops, and the application point of the resultant force is displaced to the pressure center of the workpiece being stamped. When a throttle valve completely closes a pressure pipeline, a valve (4) opens and relieves the work cylinder completely from pressure. The article includes the calculation system for a press with 3 work cylinders. The complete engineering calculations are given. It is stated that the system ensures high precision of stamped parts even at a considerable displacement of pressure center, and is recommended not only for hydraulic stamping presses, but for bending, forging and other presses. Engineers L.I. Yasakova, Ye.V. Bubenina and others took part in the experimental and calculation work. There are 4 figures, 3 tables, and 2 Soviet references.

Card 2/3

APPROVED FOR RELEASE: 07/19/2001 CIA-RDP86-00513R001445520020-8"

"APPROVED FOR RELEASE: 07/19/2001 CIA-RDP86-00513R001445520020-8

Automatic elimination of skew ...

S/182/61/000/006/006/007
D038/D112

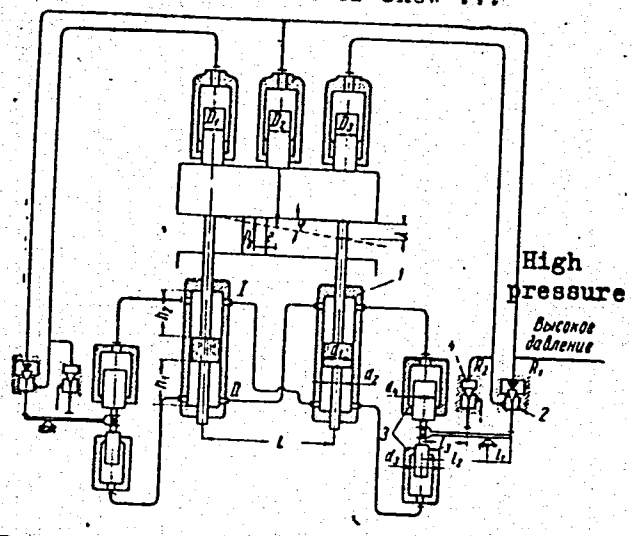

Рис. 2. Принципиальная схема выравнивания подвижной траверсы штамповочного пресса.

Fig. 2. The system principle for levelling the mobile cross beam of a stamping press

Card 3/3

APPROVED FOR RELEASE: 07/19/2001 CIA-RDP86-00513R001445520020-8"

"APPROVED FOR RELEASE: 07/19/2001 CIA-RDP86-00513R001445520020-8

ROZANOV, B.V.; BUBENINA, Ye.V.

Use of alternating feed pumps for hydraulic press drives. (MIRA 13:10)
Kuz.-shtam. proizv. 2 no.6:32-34 Je '60.
(Hydraulic presses) (Pumping machinery)

APPROVED FOR RELEASE: 07/19/2001 CIA-RDP86-00513R001445520020-8"

"APPROVED FOR RELEASE: 07/19/2001 CIA-RDP86-00513R001445520020-8

S/182/60/000/006/005/009
A161/A029

AUTHORS: Rozanov, B.V.; Bubenina, Ye.V.

TITLE: On the Use of Variable-Feed Pumps in Hydraulic Press Drives

PERIODICAL: Kuznechno-shtampovochnoye proizvodstvo, 1960, No. 6, pp. 32 - 34

TEXT: The pump drive used in variable-feed rotary-piston pumps working with mineral oil is the most economic and flexible of drives used for modern hydraulic presses, but the Soviet industry does not yet produce such pumps with sufficient power, and on the other side designers do not utilize properly variable-feed pumps and use no flywheel in these drives. This causes the rated power of electric motors for hydraulic presses with such a drive to come out higher than in mechanical presses or hydraulic presses with accumulator-pump or with multiplicator drive. The authors of this article prove by calculations that the work stroke of a press can be speeded up and the pressure varies automatically without increasing the power of the electric motor when a variable-feed pump is used. The operation of the pump is analyzed and curves are plotted, from which it may be seen that the work stroke time in hot stamping can be reduced by about 50 - 60%. Analogous calculations have been done also for deep extrusion of sheet steel. It is concluded

Card 1/2

APPROVED FOR RELEASE: 07/19/2001 CIA-RDP86-00513R001445520020-8"

"APPROVED FOR RELEASE: 07/19/2001 CIA-RDP86-00513R001445520020-8

S/182/60/000/006/005/009
A161/A029

On the Use of Variable-Feed Pumps in Hydraulic Press Drives

that using variable-feed pumps for extrusion presses the work stroke time can be cut by 30 - 35%; variable-speed pumps are particularly suitable for processes, in which the pressure on the plunger grows abruptly in a small range of the travel, and an even higher effect can be obtained by designing the pump control system so as to maintain constant pump power in this range. It was pointed out before (Ref. 2) that the pump feed must vary in inverse proportion to the pressure to obtain a constant pump power. The authors consider the flywheel in the pump drive as the most effective means for reducing the rated power of the electric motor. The use of variable-speed pumps with flywheel and several cylinders in the press would give a drive with staged rate variation, and sheet stamping presses could have the same rates as the analogous mechanical presses with electric drive motor of equal power. There are 10 figures and 3 Soviet references.

Card 2/2

APPROVED FOR RELEASE: 07/19/2001 CIA-RDP86-00513R001445520020-8"

"APPROVED FOR RELEASE: 07/19/2001 CIA-RDP86-00513R001445520020-8

CA

Controlling the process of sulfite cooking. B. G. Milov and C. Ya. Roganov. *Bumazh. Prom.* 25, No. 1, 6-10 (1950).—It was assumed that the quality of sulfite pulp, particularly its degree of polymerization, is most closely related to the pH of the liquor, which is a function of the ratio of the concn. of H_2SO_3 and $Ca(SO_3)_2$. In the change in pH with cooking time, the pH rises from an initial value of 1.7 to 3.5 during the period of wood penetration and initial lignin sulfonation, and then decreases sharply to a value less than 2 during the period of hydrolysis of the sulfonated lignin and the formation of lignosulfonic acid. The quality of the pulp was a function of the pH at the end of the cook. For a cooking temp. of 138-41°, a decrease in final liquor pH was accompanied by a decrease in pulp hardness and viscosity. The effect of final pH on pulp hardness and viscosity was exceedingly marked at 143-8°, the viscosity in particular being quite sensitive to the final pH. A final pH of 0.9 gave a pulp with a viscosity of 300, and a final pH of 0.5 a viscosity of 170 millipoises. Three types of colorimeters used in Soviet sulfite mills are described.

John Lake Keays

APPROVED FOR RELEASE: 07/19/2001 CIA-RDP86-00513R001445520020-8"

"APPROVED FOR RELEASE: 07/19/2001 CIA-RDP86-00513R001445520020-8

SOV/128-59-9-11/25

18(5,7)

AUTHOR: Rozanov D.I., Engineer

TITLE: Transfer of Moulding Sands by Pneumatic Transport

PERIODICAL: Liteynoye proizvodstvo, 1959, Nr 9, p 34 (USSR)

ABSTRACT: One of the processes encountered in foundry industry that requires the expenditure of much labor is the preparation of moulding sands. Hence the importance of mechanization of transportation methods applied for the preparation and tranfer of moulding materials inside the foundry. To this end, different equipment such as conveyor belts, elevators, etc. are usually applied, and, of late, pneumatic transport begins to be used. Such an installation was introduced and put in operation at the Leningrad Plant of Lift-and-Transport Equipment imeni S.M.Kirov (Figure 1). The operation of the plant comprises the following stages: The clay enters from the reception bunker into the drying oven and comes them from there into the grinding mill (Fig 2) where it gets ground to powder. It is then transferred by means of a fan into the cyclone-chamber (Fig 3) where the powder becomes separated

Card 1/2

APPROVED FOR RELEASE: 07/19/2001 CIA-RDP86-00513R001445520020-8"

"APPROVED FOR RELEASE: 07/19/2001 CIA-RDP86-00513R001445520020-8

SOV/128-59-9-11/25

Transfer of Moulding Sands by Pneumatic Transport

from the air. In another cyclone-chamber, the final separation of the clay powder from the air takes place; the clay falls then down, and the air goes up into the atmosphere. The fan has [illegible] revolutions a minute and develops 0.[illegible] atmosphere pressure. The length of the pneumatic transport road is 30m; lifting height - 6m; output - 1.5 to 2 tons of clay an hour. Application of this method of transfer provides a considerable economy of labor; there, where for preparing of moulding sands 9 workers had been formerly required, now, after the introduction of pneumatic transport, only 2 of them are necessary. There are 3 diagrams.

Card 2/2

APPROVED FOR RELEASE: 07/19/2001 CIA-RDP86-00513R001445520020-8"

"APPROVED FOR RELEASE: 07/19/2001 CIA-RDP86-00513R001445520020-8

ROZANOV, D. I.
AR. [illegible]SKII, Bull. soc. chim. (5) 3, 239-48, 1936
ZhOKh 5, No. 12, 1729-35, 1935

APPROVED FOR RELEASE: 07/19/2001 CIA-RDP86-00513R001445520020-8"

"APPROVED FOR RELEASE: 07/19/2001 CIA-RDP86-00513R001445520020-8

KLYUYEV, M.M.; TOPILIN, V.V.; ROZANOV, D.P.; DRUZHININA, N.P.; PUPYNINA, S.M.

Deoxidation of slag during electric slag melting. Avtom. svar. 17 no.9:55-60 S '64. (MIRA 17:10)

1. Elektrometallurgicheskiy zavod "Elektrostal'".

APPROVED FOR RELEASE: 07/19/2001 CIA-RDP86-00513R001445520020-8"

"APPROVED FOR RELEASE: 07/19/2001 CIA-RDP86-00513R001445520020-8

TOPILIN, V.V.; KLIUYEV, M.M.; VOYNOVSKIY, Ye.V.; DORONIN, V.M.; ROZANOV, D.P.

Electric slag remelting of heat-resistant, stainless steels. Stal' 23 no.9:805-809 S '63. (MIRA 16:10)

APPROVED FOR RELEASE: 07/19/2001 CIA-RDP86-00513R001445520020-8"

"APPROVED FOR RELEASE: 07/19/2001 CIA-RDP86-00513R001445520020-8

ROZANOV, D.S.

Decrease of dichloroethane poisoning rate in industry. Gig. sanit., Moskva no.7:55 July 1952. (CIML 23:2)

1. Of Moscow Municipal Sanitary Epidemiological Station.

APPROVED FOR RELEASE: 07/19/2001 CIA-RDP86-00513R001445520020-8"

"APPROVED FOR RELEASE: 07/19/2001 CIA-RDP86-00513R001445520020-8

KLYUYEV, M.M.; TOPILIN, V.V.; VOYNOVSKIY, Ye.V.; ROZANOV, D.P.; DORONIN, V.M.

Studying optimal conditions for the removal of oxygen and oxide inclusions in electric slag remelting. Avtom. svar. 15 no.3: 86-87 Mr '62. (MIRA 15:2)

(Zone melting)

APPROVED FOR RELEASE: 07/19/2001 CIA-RDP86-00513R001445520020-8"

"APPROVED FOR RELEASE: 07/19/2001 CIA-RDP86-00513R001445520020-8

34463
S/125/62/000/003/008/008
D040/D113

1.2300

AUTHORS: Klyuyev, M.M., Topilin, V.V., Voynovskiy, Ye.V., Rozanov, D.P., and Doronin, V.M.

TITLE: An investigation of optimum conditions for eliminating oxygen and oxide inclusions in electro-slag remelting.

PERIODICAL: Avtomaticheskaya svarka, no. 3, 1962, 86-87

TEXT: The effect of shielding of the slag pool and the end of the consumable electrode, the electrode surface state, and the use of fresh and spent slag on the elimination of oxygen and inclusions in electro-slag remelting, was studied on heat-resistant ЭП 65 (ЭИ 961ф) [EP65 (EI961F)] steel. Ingots, 1200-1250 kg in weight and 425 mm in diameter, were cast in an Р -951 (R-951) unit. Remelting was tried with fresh and used АНФ -6 (ANF-6) fluxes, with scale-coated and scale-free electrodes. Shielding by nitrogen and carbon tetrachloride with and without a lid on the mold was also used. Best results were obtained with scale-free electrodes, fresh slag with a low con-

Card 1/3

APPROVED FOR RELEASE: 07/19/2001 CIA-RDP86-00513R001445520020-8"

"APPROVED FOR RELEASE: 07/19/2001 CIA-RDP86-00513R001445520020-8

tent of nondurable oxides (SiO_2, FeO, Cr_2O_3, MnO) and shielding of the slag pool. Best shielding results were obtained with a lid on the mold. The oxygen content was reduced from 0.005% in the electrode to an average of 0.003% in the ingot after remelting; the content of oxide and silicate inclusions dropped by slightly over 50%. Introductions of nitrogen under the shielding lid further reduced the oxygen content from 0.005 to 0.002%, and the content of inclusions dropped correspondingly. It was stated that the top of electro-slag ingots, consisting of metal solidified after the furnace has been switched off, contained more oxygen than the tail portion where the oxygen content was 2-2.5 times less than in the initial metal. The use of spent slags for remelting EP65 steel does not help to eliminate oxygen and results in more globular inclusions. The composition of nonmetallic inclusions in comparison to the initial metal and through the height of electro-slag ingots, is different due to increased content of silica, iron oxides, chromium and manganese, and reduced alumina content. Metal remelted by electro-slag process with the use of the investigated shielding methods has an improved plasticity and impact strength in tests of longitudinal and

APPROVED FOR RELEASE: 07/19/2001 CIA-RDP86-00513R001445520020-8"

"APPROVED FOR RELEASE: 07/19/2001 CIA-RDP86-00513R001445520020-8

S/125/62/000/003/008/008
D040/D113

An investigation ...

particularly transverse specimens, as well as less anisotropic mechanical properties. It was stated that the impact strength of metal, particularly in transverse specimens, increased with diminishing content of oxide inclusions. [Abstracter's note: Complete translation].

Card 3/3

APPROVED FOR RELEASE: 07/19/2001 CIA-RDP86-00513R001445520020-8"

"APPROVED FOR RELEASE: 07/19/2001 CIA-RDP86-00513R001445520020-8

ROZANOV, F., Prof.

Electric Machinery

"Electric equipment of enterprises of light industry." S.A. Avayev, S.V. Gartung, A.N. Shmelov. Reviewed by Prof. S. Rozanov. Leg. prom. 12 no. 9, 1952.

9. Monthly List of Russian Accessions, Library of Congress, December 1952 ~~1953~~, Uncl.

APPROVED FOR RELEASE: 07/19/2001 CIA-RDP86-00513R001445520020-8"

"APPROVED FOR RELEASE: 07/19/2001 CIA-RDP86-00513R001445520020-8

ROZANOV, F. M., jt. au.

Standardization of the weaving process. Moskva, Gos. nauchno-tekhn. izd-vo legkoi promyshl., 1952. 159 p. (54-23421)

TS1490.V6

APPROVED FOR RELEASE: 07/19/2001 CIA-RDP86-00513R001445520020-8"

"APPROVED FOR RELEASE: 07/19/2001 CIA-RDP86-00513R001445520020-8

ROZANOV, F.M., kandidat tekhnicheskikh nauk; KUTEPOV, O.S.; ZHUPIKOVA, D.M.; MOLCHANOV, S.V.; VASIL'YEV, F.F., retsenzent; LYUBIMOV, N.S., retsenzent.

[Structure and designing of fabrics] Stroenie i proektirovanie tkanei. Pod red. F.M.Rozanova. Moskva, Gos. nauchno-tekhn. izd-vo Ministerstva promyshlennykh tovarov shirokogo potrebleniia SSSR, 1953. 471 p. (MLRA 7:6)

(Textile industry)

APPROVED FOR RELEASE: 07/19/2001 CIA-RDP86-00513R001445520020-8"

"APPROVED FOR RELEASE: 07/19/2001 CIA-RDP86-00513R001445520020-8

ROZANOV, F.M.

VLASOV, Petr Vasil'yevich; ROZANOV, Fedor Markianovich; SOKOLOVA, V.Ye., redaktor; MEDVEDEV, L.Ya., tekhnicheskiy redaktor

[Establishing norms for weaving processes] Normalizatsiia protsessa tkachestva. Moskva, Gos. nauchno-tekhn. izd-vo Ministerstva promyshl. tovarov shirokogo potrebleniia SSSR, 1954. 226 p. (MLRA 8:4)
(Looms)

APPROVED FOR RELEASE: 07/19/2001 CIA-RDP86-00513R001445520020-8"

"APPROVED FOR RELEASE: 07/19/2001 CIA-RDP86-00513R001445520020-8

ROZANOV, F.M.; BORODOVSKIY, M.S.; VASIL'CHENKO, V.N.; PAVLOVA, M.I.

Analytical method of computing the tension of a thread. Tekst.prom. 14 no.9:47-50 S '54. (MIRA 7:11)

1. Kafedra tkachestva Moskovskogo tekstil'nogo instituta. (for Rozanov, Borodovskiy, Vasil'chenko, Pavlova)
(Thread) (Strains and stresses)

APPROVED FOR RELEASE: 07/19/2001 CIA-RDP86-00513R001445520020-8"

"APPROVED FOR RELEASE: 07/19/2001 CIA-RDP86-00513R001445520020-8

GORDEYEV, Vasiliy Aleksandrovich; ROZANOV, F.M., retsenzent; AKSENOVA, I.I., red.; BATYREVA, G.G., tekhn. red.

[Collection of problems on weaving] Sbornik zadach po tkachestvu. Moskva, Gizlegprom. 1963. 180 p. (MIRA 16:9)

(Weaving)

APPROVED FOR RELEASE: 07/19/2001 CIA-RDP86-00513R001445520020-8"

"APPROVED FOR RELEASE: 07/19/2001 CIA-RDP86-00513R001445520020-8

L 57746-65

ACCESSION NR: AP5016780 UR/0286/65/000/010/0106/0106
621.643.415

5
B

AUTHOR: Dubinin, V. A.; Rozanov, F. V.

TITLE: Bayonet connection for pipe couplings in hydraulic systems. Class 47, No. 171235

SOURCE: Byulleten' izobreteniy i tovarnykh znakov, no. 10, 1965, 106

TOPIC TAGS: bayonet connection, pipe union, hydraulic pipe system, ball valve

ABSTRACT: An Author Certificate has been issued for a bayonet connection, consisting of rotating half-unions and ball valves, for pipe couplings in hydraulic systems. To prevent leakage during line disconnection, the ball valves have axial holes and curved slots. The half-unions have projections which fit the slots in the valves and rotate the ball valves in such a way that during connection of the pipes the valve holes align axially, and during disconnection the holes are perpendicular to the pipe axis (see Fig. 1 of the Enclosure). Orig. art. has: 1 figure. [LB]

ASSOCIATION: none

Card 1/3

APPROVED FOR RELEASE: 07/19/2001 CIA-RDP86-00513R001445520020-8"

"APPROVED FOR RELEASE: 07/19/2001 CIA-RDP86-00513R001445520020-8

L 57746-65

ACCESSION NR: AP5016780

SUBMITTED: 25Jan62 ENCL: 01 SUB CODE: IE

NO REF SOV: 000 OTHER: 000 ATD PRESS: 4040

Card 2/3

APPROVED FOR RELEASE: 07/19/2001 CIA-RDP86-00513R001445520020-8"

"APPROVED FOR RELEASE: 07/19/2001 CIA-RDP86-00513R001445520020-8

S/184/61/000/001/010/014
A104/A029

AUTHORS: Dmitriyev, P.T., Nikolayev, V.M., Engineers, Rozanov, G.A., Candidate of Technical Sciences

TITLE: Automatic Pipe Welding Apparatus АГН-8-28М (AGN-8-28M) With Hoseless Gas Supply

PERIODICAL: Khimicheskoye Mashinostroyeniye, 1961, No. 1, pp. 43-45

TEXT: The new pipe welding apparatus was designed by N.F. Shalagin and I.F. Kuz'min of the NIIKhIMMASh. The apparatus is equipped with a control panel for non-turning argon arc welding of pipes 8-26 mm in diameter made of 1Х18Н9Т (1Kh18N9T) steel. Welding is performed with 1.5 - 2.0 mm tungsten electrodes. The apparatus is mobile and suitable for currents of up to 100 amp. Its dimensions are: 130 x 102 x 210 mm and the weight is 5.5 kg. The apparatus consists of a welding head (Fig. 2) which is suspended on one of the pipes which are preliminarily centered by a special device (Fig. 3). In order to insure accurate position of the electrode the head can be moved 6 mm in either direction. Argon is supplied by a special mechanism designed by V.M. Nikoayev (Patent No. 111460).

Card 1/5

APPROVED FOR RELEASE: 07/19/2001 CIA-RDP86-00513R001445520020-8"

"APPROVED FOR RELEASE: 07/19/2001 CIA-RDP86-00513R001445520020-8

S/184/61/000/001/010/014
A104/A029

Automatic Pipe Welding Apparatus АГН-8-28М (AGN-8-28M) With Hoseless Gas Supply

Welding can be carried out with d-c or a-c of 490 cps. Various pipe joints welded by this apparatus are shown in Fig. 6. The filler can be made on the lathe and under field conditions by a special device driven by a PC-8 (RS-8) drill. Permanent metal linings are made of the same material as pipes and their length is 25-28 mm. Centrally placed cut rings serve as seals. They are made of 1Kh18N9T steel with a carbon content not exceeding 0.05%. Rings are 1 mm thick and their outside diameter exceeds that of the pipes by 3-5 mm. Welding is carried out in a single process without preliminary tacking. The filler of the tungsten electrode (from a torch nozzle) is 5-7 mm long, the clearance between the electrode and the weldment is 0.5-1.2 mm. All weldments were of satisfactory quality. There are 6 figures and 2 tables.

Card 2/5

APPROVED FOR RELEASE: 07/19/2001 CIA-RDP86-00513R001445520020-8"

"APPROVED FOR RELEASE: 07/19/2001 CIA-RDP86-00513R001445520020-8

S/184/61/000/001/010/014
A104/A029

Automatic Pipe Welding Apparatus АГН-8-28М (AGN-8-28M) With Hoseless Gas Supply

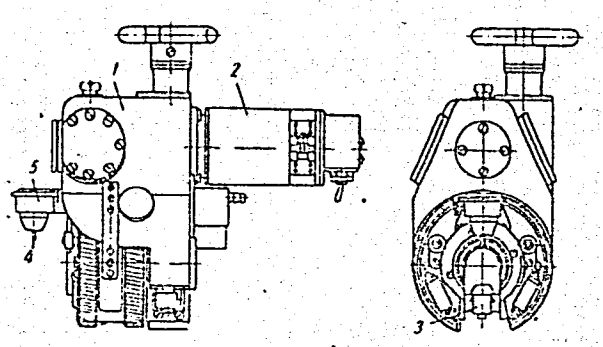

Fig. 2: АГН-8-28М (AGN-8-28M) welding head.
1. cone
2. МУ-50 (MU-50) electrometer
3. fixture
4. electrode
5. torch

Card 3/5

APPROVED FOR RELEASE: 07/19/2001 CIA-RDP86-00513R001445520020-8"

"APPROVED FOR RELEASE: 07/19/2001 CIA-RDP86-00513R001445520020-8

S/184/61/000/001/010/014
A104/A029

Automatic Pipe Welding Apparatus АГН-8-28М (AGN-8-28M) With Hoseless Gas Supply

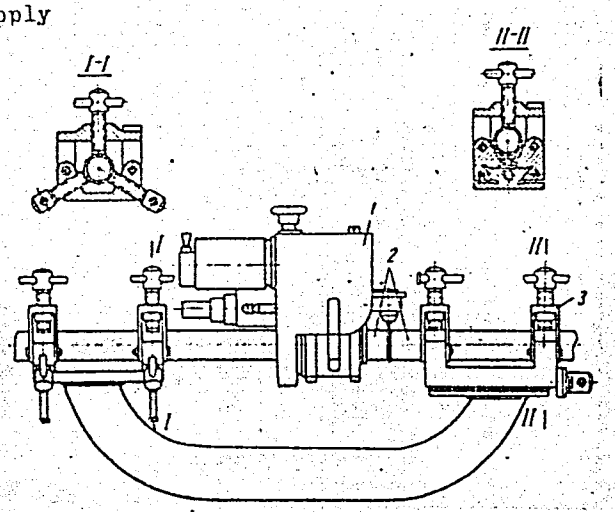

Fig. 3: Fixture for tubes with the welding head.
1. welding head
2. tube
3. fixing bolts

Card 4/5

APPROVED FOR RELEASE: 07/19/2001 CIA-RDP86-00513R001445520020-8"

"APPROVED FOR RELEASE: 07/19/2001 CIA-RDP86-00513R001445520020-8

S/184/61/000/001/010/014
A104/A029

Automatic Pipe Welding Apparatus -8-28M (AGN-8-28M) With Hoseless Gas Supply

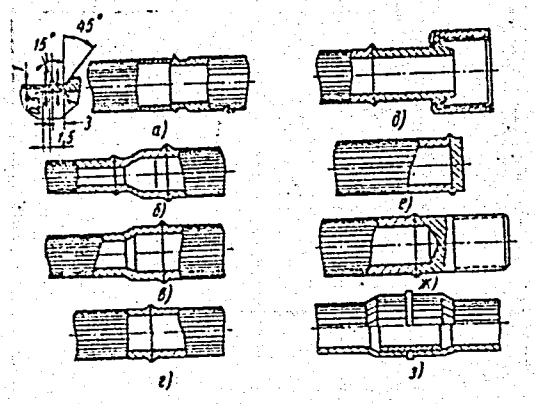

Fig. 6: Various designs of welded joints

Card 5/5

APPROVED FOR RELEASE: 07/19/2001 CIA-RDP86-00513R001445520020-8"

"APPROVED FOR RELEASE: 07/19/2001 CIA-RDP86-00513R001445520020-8

DMITRIYEV, P.T., inzh.; NIKOLAYEV, V.M., inzh.; ROZANOV, G.A., kand. tekhn.nauk

AGN-8-28M automatic tube-welding machine with a hoseless gas feed Khim. mash. no. 1:43-45 Ja-F '61. (MIRA 14:1)
(Tubes—Welding)

APPROVED FOR RELEASE: 07/19/2001 CIA-RDP86-00513R001445520020-8"

"APPROVED FOR RELEASE: 07/19/2001 CIA-RDP86-00513R001445520020-8

DMITRIYEV, P.T., inzh.; NIKOLAYEV, V.M., inzh.; ROZANOV, G.A., kand.-tekhn.nauk

AGN-8-26M automatic pipe-welding machine with a hoseless gas feed. Sbor.st. NIIKHIMMASH no.33:85-98 '60. (MIRA 15:5)
(Welding--Equipment and supplies)

APPROVED FOR RELEASE: 07/19/2001 CIA-RDP86-00513R001445520020-8"

"APPROVED FOR RELEASE: 07/19/2001 CIA-RDP86-00513R001445520020-8

S/196/61/000/010/027/037
E194/E155

AUTHORS: Rozanov, G.A., Danilin, A.A., and Mordovskiy, S.I.

TITLE: An automatic control system for a separation process

PERIODICAL: Referativnyy zhurnal, Elektrotekhnika i energetika, no.10, 1961, 23, abstract 10K 132. (Vestn. tekhn. i ekon. inform. N.-i. in-t tekhn.-ekon. issled. Gos. kom-ta Sov. Min. SSSR po khimii, no.10, 1960, 50-53)

TEXT: The article describes an automatic control systel for a separation process which takes load off the separator when the degree of clarification deviates from the permitted limits. The suspension to be treated is delivered to the separator through an inlet valve. The clarified liquid then passes through an indicator of cloudiness which determines the degree of purification in accordance with preset limits. When the quality of purification falls off, an amplified signal is applied to a relay circuit which excites an amplidyne. The latter applies a voltage to close a motorised input valve. When it is fully closed, the amplidyne field cuts off, the motor stops and a signal connects the appropriate electro-pneumatic instrument which

Card 1/2

APPROVED FOR RELEASE: 07/19/2001 CIA-RDP86-00513R001445520020-8"

"APPROVED FOR RELEASE: 07/19/2001 CIA-RDP86-00513R001445520020-8

An automatic control system for ... S/196/61/000/010/027/037
E194/E155

commences the cycle of unloading the separator. Simultaneously, the instrument sends a signal to lock the relay circuit and to disconnect the amplifier train from the cloudiness indicator so as to avoid false operation of the automatic control system after unloading is completed.

[Abstractor's note: Complete translation.]

Card 2/2

APPROVED FOR RELEASE: 07/19/2001 CIA-RDP86-00513R001445520020-8"

"APPROVED FOR RELEASE: 07/19/2001 CIA-RDP86-00513R001445520020-8

L 23954-66 EWT(d)/EWT(1)/EWP(v)/EWP(k)/EWP(h)/EWP(1)/EWA(h) WW

ACC NR: AP6009912 SOURCE CODE: UR/0413/66/000/004/0108/0108

47
46
B

AUTHOR: Lanin, N. D.; Gorokhov, V. M.; Rozanov, G. G.

ORG: none

TITLE: An electropneumatic transducer. Class 42, No. 179101

10

SOURCE: Izobreteniya, promyshlennyye obraztsy, tovarnyye znaki, no. 4, 1966, 108

TOPIC TAGS: pneumatic device, electromechanic converter, pneumatic computer, pneumatic servomechanism

26

ABSTRACT: This Author's Certificate introduces an electropneumatic transducer which contains series-connected electromechanical and mechanical-pneumatic units with a power amplifier. An electrical signal is converted to a continuous pneumatic signal which varies in a direction which is determined by the sign of the input signal at a speed determined by the amplitude of the input signal. The device is designed for manual control. The unit contains a pneumatic integrator with its input connected to the output of the mechanical-pneumatic system, while its output is connected to the power amplifier and a servosystem. The transducer also has a device for fixing the output pressure which consists of a servosystem with its rod connected to spring-return baffles and limiters for the upper and lower output pressures. The position of the rod is fixed by a pneumatic brake system with the input channel connected to a solenoid valve controlled by the system for chargeover of operating conditions.

UDC: 681.142-525

Card 1/2

APPROVED FOR RELEASE: 07/19/2001 CIA-RDP86-00513R001445520020-8"

"APPROVED FOR RELEASE: 07/19/2001 CIA-RDP86-00513R001445520020-8

L 23954-66

ACC NR: AP6009912

input

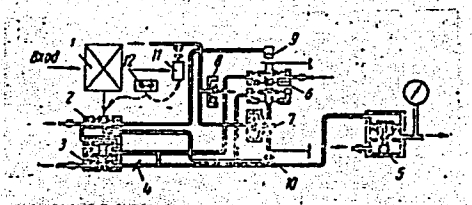

1--input converter; 2--converter for changing force to proportional air pressure; 3--adder; 4--variable choke; 5--power amplifier (output); 6--servosystem; 7--pneumatic brake system; 8--pneumatic valve; 9 and 10--limiters for the upper and lower output pressures; 11--solenoid valve; 12--manual control mechanism.

SUB CODE: 13/ SUBM DATE: 01Mar62/ ORIG REF: 000/ OTH REF: 000

Card 2/2

APPROVED FOR RELEASE: 07/19/2001 CIA-RDP86-00513R001445520020-8"

"APPROVED FOR RELEASE: 07/19/2001 CIA-RDP86-00513R001445520020-8

ROZANOV, G. M. Docent

USSR/Electricity Nov 48
Transmission Lines
Currents, Electric - Alternating

"Transmission of 400-Kilovolt Alternating Current," Prof P. S. Zhdanov, Dr Tech Sci, Docent V. A. Venikov, Cand Tech Sci Docent G. M. Rozanov, Cand Tech Sci, Moscow Power Eng Inst imeni Molotov, 10 pp

"Elektrichestvo" No 11

Considers proper selection of transmission lines for proposed transmission at 400 dv. Highest voltage currently in use is 220 kv. Analyzes problems of grounding neutral, split conductors in connection with power losses in corona discharge. Gives mechanical description of transmission lines, and operating performance and stability of transmission at 400 kv.

PA 27/49T53

APPROVED FOR RELEASE: 07/19/2001 CIA-RDP86-00513R001445520020-8"

"APPROVED FOR RELEASE: 07/19/2001 CIA-RDP86-00513R001445520020-8

USSR/Electricity Mar 49
Electric Terminals
Electric Lines

"Terminals for 220 Kilovolt Lines in Regions Having Frost," Docent G. M. Rozanov, Cand Tech Sci, Moscow Eng Inst imeni Molotov, 3½ pp

"Elektrichestvo" No 3

Line carrying 35 - 220 kv is attached to swinging insulators on poles and equipped with blind, outlet, and sliding terminals. Discusses experimental results of outlet terminals, installed on lines suspended from wooden poles. Same system could be used with metal poles. Refers to analytic studies which disproved the usual objection to use of outlet terminals in heavy frost regions. Gives two tables and two diagrams of experimental results.

[redacted] 38/49T19

ROZANOV, G. M., DOCENT

APPROVED FOR RELEASE: 07/19/2001 CIA-RDP86-00513R001445520020-8"

"APPROVED FOR RELEASE: 07/19/2001 CIA-RDP86-00513R001445520020-8

1ST AND 2ND ORDERS

PROCESSES AND PROPERTIES INDEX

3RD AND 4TH ORDERS

S A

B 64

621.315.14

3547. Calculation of split conductors of 400 kV line. ROZANOV, G. M. *Elektrichestvo* (*No.* 6) 5–8 (*June*, 1959) [in Russian].—Method of estimating and actual values of mechanical stresses in steel-cored Al overhead conductors are given for cases of breakdown of one or more conductors in a phase. Ice formation and wind effects are taken into account. Several conductors per phase are shown to be more economical than conventional ones. J. L.

B 64

COMMON ELEMENTS

MATERIALS INDEX

OPEN

ASM-SLA METALLURGICAL LITERATURE CLASSIFICATION

MATERIALS INDEX

3RD AND 4TH ORDERS

2ND LETTER

AUTHOR INDEX

1ST AND 2ND LETTER

APPROVED FOR RELEASE: 07/19/2001 CIA-RDP86-00513R001445520020-8"

"APPROVED FOR RELEASE: 07/19/2001 CIA-RDP86-00513R001445520020-8

ROZANOV, G. M., Docent

USSR/Electricity - Transmission Lines
Electric Power

Jul 50

"Characteristics of Long-Distance AC Transmission Lines," V. A. Venikov, Cand Tech Sci, Docent G. M. Rozanov, N. N. Sokolov, Engr, Moscow Power Eng Inst imeni Molotov

"Elektrichestvo" No 7, pp 8-16

Discusses basic problems in design of power-transmission lines, giving analysis of technical and economic characteristics of lines of 220, 400, and 440 kv. Describes characteristics of mechanical part of lines, calculates corona losses, and gives estimate of lightning protection capabilities.

[redacted]

PA 164T11

APPROVED FOR RELEASE: 07/19/2001 CIA-RDP86-00513R001445520020-8"

"APPROVED FOR RELEASE: 07/19/2001 CIA-RDP86-00513R001445520020-8

CA

B64
f

621.315.17(47)

87. **Construction of 220 kV lines.** G. M. Rozanov. *Elektrichestvo*, No. 8, 32-7 (*Aug.*, 1950) *In Russian.*

A short description of the construction of 9 lines in the U.S.S.R., dealing with conductors and earthing wires (steel-aluminium conductors of 300-400 mm² cross-sectional area, in few cases 240 mm² copper conductors; mechanical safety coefficient 5). The small sag of these conductors enables long spans to be used (i.e. for the Al-Fe conductors, not for the Cu ones), and the corrosion resistance is very satisfactory in severe climatic conditions. A pair of earthing wires suspended 5-6 m above the conductors provides a protective angle for the outer conductors of 20-25°. Details are also given of the suspension, insulators and the various types of towers used, with tabulated data on these.

B. F. KRAUS

ASM-SLA METALLURGICAL LITERATURE CLASSIFICATION

APPROVED FOR RELEASE: 07/19/2001 CIA-RDP86-00513R001445520020-8"

"APPROVED FOR RELEASE: 07/19/2001 CIA-RDP86-00513R001445520020-8

ROZANOV, G. M., VENIKOV, V. A., GLAZUNOV, N. A., ANISIMOVA, N. D., TELESHEV, B. A., STEPANOV, V. N., NEMNIKOV, N. A., PETROV, M. A., ROGAL'-LEVITSKIY, M. V.,

"Prof. A. Ya. Ryabkob," (a biographic eulogy), Elektrichestvo, No. 6, 1951.

APPROVED FOR RELEASE: 07/19/2001 CIA-RDP86-00513R001445520020-8"

"APPROVED FOR RELEASE: 07/19/2001 CIA-RDP86-00513R001445520020-8

ROZANOV, G. M.; Chilikin, M.G.; Sukomel, A.S.; Solov'yev, I.I.; Sirotinskiy, L.I.; Bel'kind, L.D.; Fedoseyev, A.M.; Grudinskiy, P.G.; Ul'yanov, S.A.; Venikov, V.A.; Medvedev, B.P.; Soldatkina, L.A.; Vasil'yev, A.A.; Anisimova, N.D.

Professor A. A. Glazunov. On His 60th Birthday and 30th Year of Scientific Pedagogical, Engineering, and Society Activity. Elektrichestvo, No. 1, 1952

Monthly List of Russian Accessions, Library of Congress, April 1952. UNCLASSIFIED

APPROVED FOR RELEASE: 07/19/2001 CIA-RDP86-00513R001445520020-8"

"APPROVED FOR RELEASE: 07/19/2001 CIA-RDP86-00513R001445520020-8

ROZANOV, G. M.

PA 240T30

USSR/Electricity - Transmission Lines Mar 52
Icing

"Vertical Clearance Between Conductors in Regions Where Ice-Loading Occurs," Doc G. M. Rozanov, Cand Tech Sci, Moscow Power Eng Inst imeni Molotov

"Elektrichestvo" No 3, pp 44-48

Analyzes the influence of number of spans between anchor towers, length of spans, conductor type, and icing conditions of region on vertical clearance between conductors. Recommends a calcn

240T30

system for non-uniformly ice-loaded conductors and cites numerical example. Article is published to encourage discussion in connection with "Rules for Construction of Electrical Engineering Installations." Submitted 25 Sep 51.

240T30

APPROVED FOR RELEASE: 07/19/2001 CIA-RDP86-00513R001445520020-8"

"APPROVED FOR RELEASE: 07/19/2001 CIA-RDP86-00513R001445520020-8

USSR/Electricity - Steel-Aluminum Conductors May 52

"Economically Feasible Ratio of Aluminum and Steel Cross-Sections in Steel-Aluminum Conductors," Prof A. A. Glazunov, Dr Tech Sci, Cands Tech Sci A. A. Glazunov [sic], and G. M. Roxanov Moscow Power Eng Inst imeni Molotov

PA 240T41

"Elektrichestvo" No 5, pp 10-15

Shows that prodn designs of steel-aluminum wires based on GOST 839-41 are economically unsound. Proposes new design with increased ratio of aluminum to steel cross-section. Presents economic

240T41

basis for new design. Suggests replacement of GOST 839-41 with new standard. Work done at Chair of Electrical Networks and Systems of authors' institute. Article published to encourage discussion. Submitted 14 Dec 51.

240T41

ROXANOV, G. M.

APPROVED FOR RELEASE: 07/19/2001 CIA-RDP86-00513R001445520020-8"

"APPROVED FOR RELEASE: 07/19/2001 CIA-RDP86-00513R001445520020-8

GLAZUNOV, Aleksandr Aleksandrovich, 1891-, professor, zasluzhennyy deyatel' nauki i tekhniki; GLAZUNOV, A.A., dotsent; ROZANOV, G.M., dotsent.

[Problems on electrical network systems] Zadachnik po setiam elektricheskikh sistem. Moskva, Gos.energ.izd-vo, 1953. 159 p. (MLRA 6:9)
(Electric engineering--Problems, exercises, etc.)

APPROVED FOR RELEASE: 07/19/2001 CIA-RDP86-00513R001445520020-8"

"APPROVED FOR RELEASE: 07/19/2001 CIA-RDP86-00513R001445520020-8

1. GLAZUNOV, A.A.; ROZANOV, G.M.

2. USSR (600)

4. Electric Wire

7. Remarks on A.A. Glazunov, A.A. Glazunov (sic), and G.M. Rozanov's article "Practical economic relationship between the cross sections of aluminum and steel in steel-aluminum conductors." N.N. Krachkovskiy, Eng. R.A. Golubtsov, Elektrichestvo no. 4, 1953.

9. Monthly List of Russian Accessions, Library of Congress, APRIL 1953, Uncl.

APPROVED FOR RELEASE: 07/19/2001 CIA-RDP86-00513R001445520020-8"

"APPROVED FOR RELEASE: 07/19/2001 CIA-RDP86-00513R001445520020-8

USSR/Electricity - Conductors ROZANOV, G.N.
Standards

Apr 54

"Discussion of the Article by A. A. Glazunov, A. A. Glazunov [sic], and G. N. Rozanov, 'Economically Feasible Ratio of Aluminum and Steel Sections in Steel-Aluminum Conductors,'" N. N. Krechkovskiy, Cand Tech Sci, Gidroenergoproyekt; Engr R. A. Golubtsov, Teploelektroproyekt

Elektrichestvo, No 4, pp 84-86

Krechkovskiy and Golubtsov, in separate comments, discuss merits and important aspects of proposal by Glazunov et al (Elektrichestvo, No 5, 1952) to revise standard GOST-339-41 on steel-aluminum conductors.

258T32

APPROVED FOR RELEASE: 07/19/2001 CIA-RDP86-00513R001445520020-8"

"APPROVED FOR RELEASE: 07/19/2001 CIA-RDP86-00513R001445520020-8

ROZANOV, G. M.

Electrical Engineering Abstracts
May 1954
Transformers

1921. Unequal span lengths on transmission lines supported by releasing clamps. G. M. ROZANOV. *Elektrichestvo*, 1953, *No.* 9, 11–15. *In Russian.*

Unequal distribution of the supporting structures due to conditions of the profile over which the line runs results in different span lengths. It seemed doubtful whether the use of releasing clamps is permissible if the differences in the lengths of adjacent spans are considerable. This problem is investigated by calculating the deflections of the insulator strings under various conditions. The calculation proves that the maximum deflection does not coincide with the point at which the maximum difference in the length of successive spans occurs. The deflection depends in actual fact on the difference between the temperatures at erection and at the time of measurement. The optimum temperature for erecting conductors (for the conditions of "climatic zone II" on which the investigation was based) is about 0°c. The absolute deflections of the strings are so small that there does not seem to be any reason to use straining clamps (requiring intermediate towers of a heavier type than those fitted with releasing clamps, and correspondingly more expensive). Of the many cases of string deflections analysed in the paper none calls for straining clamps. A numerical example illustrates the simple calculation for determining the deflection.

B. F. KRAUS

APPROVED FOR RELEASE: 07/19/2001 CIA-RDP86-00513R001445520020-8"

"APPROVED FOR RELEASE: 07/19/2001 CIA-RDP86-00513R001445520020-8

ROZANOV, G.N.

Nekotorye voprosy rascheta mekhanicheskoi chasti vozdushnykh linii (Some problems of calculations for mechanical parts of overhead lines). Moskva, Gosenergoizdat, 1954. 224.p.

SO: Monthly List of Russian Accessions, Vol. 7, No. 5, August 1954

APPROVED FOR RELEASE: 07/19/2001 CIA-RDP86-00513R001445520020-8"

"APPROVED FOR RELEASE: 07/19/2001 CIA-RDP86-00513R001445520020-8

CHILIKIN, M.G.; GLAZUNOV, A.A.; STEPANOV, V.N.; TELESHEV, B.A.; GRUDINSKIY, P.G.; VENIKOV, V.A.; MEL'NIKOV, N.A.; ROGALI-LEVITSKIY, M.V.; ROZANOV, G.M.; GLAZUNOV, G.M.; SOLDATKINA, L.A.; ZHUKOV, L.A.; ANISIMOVA, N.D.

Aleksandr IAkovlevich Riabkov; obituary. Elek.sta. 25 no.2: 59 F '54. (MLRA 7:2)

(Riabkov, Aleksandr IAkovlevich, 1890-1954)

APPROVED FOR RELEASE: 07/19/2001 CIA-RDP86-00513R001445520020-8"

"APPROVED FOR RELEASE: 07/19/2001 CIA-RDP86-00513R001445520020-8

GUSEV, S.A., inzh.; ZHUKHOVITSKIY, B.Ya., kand.tekhn.nauk; ZARIN, D.D., kand.tekhn.nauk; IVANOV-SMOLENSKIY, A.V., kand.tekhn.nauk; KNYAZEVSKIY, B.A., kand.tekhn.nauk; KUZNETSOV, A.I., inzh.; KOZIS, V.L., kand.tekhn.nauk; KORYTIN, A.A., inzh.; LASHKOV, F.P., inzh.; L'VOV, Ye.L., kand.tekhn.nauk; MELESHKINA, L.P., kand.tekhn.nauk; NEKRASOVA, N.M., kand.tekhn.nauk; NIKULIN, N.V., kand.tekhn.nauk; POLEVOY, V.A., kand.tekhnicheskikh nauk; RAZEVIG, D.V., kand.tekhn.nauk; ROZANOV, G.M., kand.tekhn. nauk; RUMSHISKIY, L.Z., kand.fiz.-matem.nauk; SVISTOV, N.K., kand.tekhn.nauk; SIROTINSKIY, Ye.L., kand.tekhn.nauk; SOKOLOV, M.M., kand.tekhn.nauk; TALITSKIY, A.V., prof.; TREMBACH, V.V., inzh.; FEDOROV, A.A., kand.tekhn.nauk; GRUDINSKIY, P.G., prof.; PRYTKOV, V.T., kand.tekhn.nauk; CHILIKIN, M.G., prof., glavnyy red.; GOLOVAN, A.T., prof., red.; PETROV, G.N., prof., red.; FEDOSEYEV, A.M., prof., red.; ANTIK, I.V., red.; SKVORTSOV, I.M., tekhn.red.

[Handbook for electric engineering] Elektrotekhnicheskii spravochnik. Moskva, Gos.energ.izd-vo, 1952. 640 p. (MIRA 13:2)

1. Prepodavateli Moskovskogo energeticheskogo instituta imeni V.M. Molotova (for all except Antik, Skvortsov).
(Electric engineering)

APPROVED FOR RELEASE: 07/19/2001 CIA-RDP86-00513R001445520020-8"

"APPROVED FOR RELEASE: 07/19/2001 CIA-RDP86-00513R001445520020-8

ROZANOV, G.M.; GORTINSKIY, S.M., red.; FRIDKIN, A.M., tekhn.red.

[Some problems of designing mechanical parts of overhead lines] Nekotorye voprosy rascheta mekhanicheskoi chasti vozdushnykh linii. Moskva, Gos. energ. izd-vo, 1954. 223 p. (MIRA 11:6)
(Electric lines--Overhead)

APPROVED FOR RELEASE: 07/19/2001 CIA-RDP86-00513R001445520020-8"

"APPROVED FOR RELEASE: 07/19/2001 CIA-RDP86-00513R001445520020-8

ROZANOV, G.N.

Conference of workers of the medical supplies industry. Med.prom. O-D '55. (MIRA 9:12)

(MEDICAL SUPPLIES)

APPROVED FOR RELEASE: 07/19/2001 CIA-RDP86-00513R001445520020-8"

"APPROVED FOR RELEASE: 07/19/2001 CIA-RDP86-00513R001445520020-8

ROZANOV, G.S. (Moskva)

Unusual location of a metastasis of hypernephroid cancer of the kidney. Urologiia, 22 no.1:69 Ja-F '57 (MLRA 10:5)

1. Iz 2-y bol'nitsy (glavnyy vrach F.K. Morshchagin) Ministerstva zdravookhraneniya SSSR.
(KIDNEYS--CANCER) (VAGINA--CANCER)

APPROVED FOR RELEASE: 07/19/2001 CIA-RDP86-00513R001445520020-8"

"APPROVED FOR RELEASE: 07/19/2001 CIA-RDP86-00513R001445520020-8

ROZANOV, G. S.

ROZANOV, G. S. -- "Automatization of Controls and the Calculation of Output of Diffused Liquor and Methods of Calculation of Basic Elements of the System." Sub 26 Jun 52, Moscow Inst of Chemical Machine Building. (Dissertation for the Degree of Candidate in Technical Sciences)

SO: Vechernaya Moskva, January-December 1952

APPROVED FOR RELEASE: 07/19/2001 CIA-RDP86-00513R001445520020-8"

"APPROVED FOR RELEASE: 07/19/2001 CIA-RDP86-00513R001445520020-8

ROZANOV, G.S.

Changes in the function of pancreas following gastric resection. Khirurgiia 32 no.2:20-24 F '56. (MLRA 9:7)

1. Iz khirurgicheskogo otdeleniya 2-y bol'nitsy Ministerstva zdravookhraneniya SSSR (nauchnyy rukovoditel', prof. A.V.Gulyayev, glavnyy vrach. F.K.Morshchagin)

(STOMACH, surg.
gastrectomy, eff. on funct. of pancreas)
(PANCREAS, physiol.
funct., eff. of gastrectomy)

APPROVED FOR RELEASE: 07/19/2001 CIA-RDP86-00513R001445520020-8"

"APPROVED FOR RELEASE: 07/19/2001 CIA-RDP86-00513R001445520020-8

TANANAYEV, I.V.; ROZANOV, I.A.; KOLGUSHKINA, A.G.

Complex hafnium thiocyanates. Zhur.neorg.khim. 8 no.4:1013-1014 Ap '63. (MIRA 16:3)

1. Institut obshchey i neorganicheskoy khimii imeni N.S.Kurnakova AN SSSR.

(Hafnium compounds) (Thiocyanates)

APPROVED FOR RELEASE: 07/19/2001 CIA-RDP86-00513R001445520020-8"

"APPROVED FOR RELEASE: 07/19/2001 CIA-RDP86-00513R001445520020-8

KHARITONOV, Yu.Ya.; ROZANOV, I.A.; TANANAYEV, I.V.

Infrared absorption spectra of thyocyanate complexes of hafnium (IV). Izv. AN SSSR. Otd.khim. nauk no.4:596-601 Ap '63. (MIRA 16:3)

1. Institut obshchey i neorganicheskoy khimii im. N.S.Kurnakova AN SSSR. (Hafnium compounds—Absorption spectra) (Thiocyanates)

APPROVED FOR RELEASE: 07/19/2001 CIA-RDP86-00513R001445520020-8"

"APPROVED FOR RELEASE: 07/19/2001 CIA-RDP86-00513R001445520020-8

ROZANOV, I.A.

AID Nr. 978-3 28 May

THIOCYANATE COMPLEXES OF HAFNIUM (USSR)

Tananayev, I. V., I. A. Rozanov, and A. G. Kolgushkina. Zhurnal neorganicheskoy khimii, v. 8, no. 4, Apr 1963, 1013-1014.
S/078/63/008/004/011/013

The hafnium complexes Cs $[HfO(NCS)_3 H_2O]H_2O$ (I), $PyH[HfO(NCS)_3 H_2O]$ (II), $(PyH)_3[(HfO)_2(NCS)_7]H_2O$ (III), and $(PyH)_2[Hf(NCS)_6]$ (IV), where PyN is pyridine, were synthesized for the first time at the Institute of General and Inorganic Chemistry imeni N. S. Kurnakov of the Academy of Sciences USSR. The complexes were prepared from $HfOCl_2 \cdot 8H_2O$, NaNCS, and CsCl in aqueous solution for I, and without CsCl in pyridine solution at an initial $PyH:HfOCl_2$ molar ratio of 1:1 for II and of 2:1 for III. Complex IV was synthesized in 2M HCl, from 0.4M $HfOCl_2 \cdot 8H_2O$ at an initial $PyHCl:HfOCl_2:NaNCS$ molar ratio of 2:1:6. The compositions of I, II, III, and IV were determined by

Card 1/2

APPROVED FOR RELEASE: 07/19/2001 CIA-RDP86-00513R001445520020-8"

"APPROVED FOR RELEASE: 07/19/2001 CIA-RDP86-00513R001445520020-8

AID Nr. 978-3 28 May

THIOCYANATE COMPLEXES [Cont'd] S/078/63/008/004/011/013

elemental analysis, and their structure from thermogravimetric analysis, pH in aqueous solution, and molecular conductivity data. It was found that all the complexes hydrolyze in H_2O and that with increasing absolute value of the negative logarithm of the concentration of the complex, the pH also increased. The molecular electrical conductivity measured in methanol for all complexes at V = 500, where V = dilution in l/mol, ranged from 117 to 280 $ohm^{-1} \cdot cm^2$, and at V = 1000 from 134 to 311 $ohm^{-1} \cdot cm^2$. [NI]

Card 2/2

APPROVED FOR RELEASE: 07/19/2001 CIA-RDP86-00513R001445520020-8"

"APPROVED FOR RELEASE: 07/19/2001 CIA-RDP86-00513R001445520020-8

TANANAYEV, I.V.; ROZANOV, I.A.

Thiocyanate compounds of zirconium. Zhur. neorg. khim. 7 no.8:1854-1859 Ag '62. (MIRA 16:6)

(Zirconium compounds) (Thiocyanates)

APPROVED FOR RELEASE: 07/19/2001 CIA-RDP86-00513R001445520020-8"

"APPROVED FOR RELEASE: 07/19/2001 CIA-RDP86-00513R001445520020-8

S/062/62/000/003/005/014
B110/B101

AUTHORS: Kharitonov, Yu. Ya., and Rozanov, I. A.

TITLE: Infrared absorption spectra of zirconium thiocyanate complexes

PERIODICAL: Akademiya nauk SSSR. Izvestiya. Otdeleniye khimicheskikh nauk, no. 3, 1962, 402-407

TEXT: In order to clarify the structure of zirconium thiocyanate complexes $M[ZrO(NCS)_3H_2O]\cdot H_2O$, their infrared absorption spectra (400-4000 cm^{-1}) as well as those of $(PyH)_2[Zr(NCS)_6]\cdot 2H_2O$ (Py = pyridine) and $ZrOCl_2\cdot 8H_2O$ were studied in the solid state. Spectra of $ZrO(NCS)_2\cdot MNCS\cdot 2H_2O$ and of the same complex with only one water molecule were obtained for M = NH_4, K, Rb, Cs, or PyH. The spectra of these compounds were very similar. The bands at 1600-1609 cm^{-1} [δH_2O] and ~2700-3600 cm^{-1} [$\nu(OH)$] correspond to water. The considerable widening and shift of the $\nu(OH)$ bands for $ZrO(NCS)_2\cdot MNCS\cdot 2H_2O$

Card 1/3

APPROVED FOR RELEASE: 07/19/2001 CIA-RDP86-00513R001445520020-8"

"APPROVED FOR RELEASE: 07/19/2001 CIA-RDP86-00513R001445520020-8

Infrared absorption spectra of... S/062/62/000/003/005/014
B110/B101

There are 3 figures and 1 table. The most important reference to English-language publications is: G. C. Pimentel, A. L. McClellan, The Hydrogen Bond, San Francisco - London, W. H. Freeman and Co., 1960.

ASSOCIATION: Institut obshchey i neorganicheskoy khimii im. N. S. Kurnakova Akademii nauk SSSR (Institute of General and Inorganic Chemistry imeni N. S. Kurnakov of the Academy of Sciences USSR)

SUBMITTED: October 7, 1961

Card 3/3

APPROVED FOR RELEASE: 07/19/2001 CIA-RDP86-00513R001445520020-8"

"APPROVED FOR RELEASE: 07/19/2001 CIA-RDP86-00513R001445520020-8

VLASOV, P.V.; ROZANOV, I.B.

X-ray and gastroscopic data in hyperplasia of the gastric mucosa. (MIRA 18:3)
Trudy TSIU 62:229-241 '63.

1. II kafedra rentgenologii (zav. prof. Yu.N.Sokolov) i II kafedra klinicheskoy khirurgii (zav. prof. B.K.Osipov) TSentral'nogo instituta usovershenstvovaniya vrachey.

APPROVED FOR RELEASE: 07/19/2001 CIA-RDP86-00513R001445520020-8"

"APPROVED FOR RELEASE: 07/19/2001 CIA-RDP86-00513R001445520020-8

ROZANOV, I.B., kand. med. nauk; KUZEYEV, Ye.A.

Role of gastroscopy in the diagnosis of diseases of the stomach. Trudy TSIU 66:179-182 '64. (MIRA 18:5)

APPROVED FOR RELEASE: 07/19/2001 CIA-RDP86-00513R001445520020-8"

"APPROVED FOR RELEASE: 07/19/2001 CIA-RDP86-00513R001445520020-8

ZAK, Yu.I., dotsent; [illegible]NOV, I.B., kand.med.nauk

Late results of surgical treatment in cholecystitis. Vest. khir. 93 no.12:29-32 D '64. (MIRA 18:5)

1. Iz 2-y kafedry klinicheskoy khirurgii (zav. - prof. B.K.Osipov) TSentral'nogo instituta usovershenstvovaniya vrachey (rektor - M.B.Kovrigina).

APPROVED FOR RELEASE: 07/19/2001 CIA-RDP86-00513R001445520020-8"

"APPROVED FOR RELEASE: 07/19/2001 CIA-RDP86-00513R001445520020-8

ROZANOV, I.B., kand. med. nauk; RUBINOV, R.S.

Some causes of unsatisfactory results of an appendectomy. Trudy TSIU 66:206-223 '64. (MIRA 18:5)

APPROVED FOR RELEASE: 07/19/2001 CIA-RDP86-00513R001445520020-8"

"APPROVED FOR RELEASE: 07/19/2001 CIA-RDP86-00513R001445520020-8

ROZANOV, I. B., Cand Med Sci -- (diss) "Polyps of the Stomach," Moscow, 1960, 18 pp (Academy of Medical Sciences) (KL, 36-60, 118)

APPROVED FOR RELEASE: 07/19/2001 CIA-RDP86-00513R001445520020-8"

"APPROVED FOR RELEASE: 07/19/2001 CIA-RDP86-00513R001445520020-8

ROZANOV, I.B., kand.med.nauk

Advantages of the Billroth I operation in gastric resection for polypi. Vest.khir. no.10:109-113 '61. (MIRA 14:10)

1. Iz 2-y kafedry klinicheskoy khirurgii (zav. - prof. B.K. Osipov) TSentral'nogo instituta usovershenstvovaniya vrachey.
(STOMACH—TUMORS)

APPROVED FOR RELEASE: 07/19/2001 CIA-RDP86-00513R001445520020-8"

"APPROVED FOR RELEASE: 07/19/2001 CIA-RDP86-00513R001445520020-8

ROZANOV, I.B.

Polyps of the stomach. Trudy TSIU 2:173-186 '61. (MIRA 15:8)
(STOMACH--TUMORS)

APPROVED FOR RELEASE: 07/19/2001 CIA-RDP86-00513R001445520020-8"

"APPROVED FOR RELEASE: 07/19/2001 CIA-RDP86-00513R001445520020-8

ROZANOV, I.B., kand.med.nauk (Moskva)

Foreign bodies in the esophagus and the complications connected with them. Med.sestra 21 no.7:34-38 Jl '62. (MIRA 15:8)
(ESOPHAGUS--FOREIGN BODIES)

APPROVED FOR RELEASE: 07/19/2001 CIA-RDP86-00513R001445520020-8"

"APPROVED FOR RELEASE: 07/19/2001 CIA-RDP86-00513R001445520020-8

ZAGNITKOVSKAYA, E.M.; ROZANOV, I.B., kand.med.nauk; RUBINOV, R.S.

Case of Crohn's disease. Vest. rent. i rad. 37 no.2:57-61 Mr-Ap '62. (MIRA 15:4)

1. Iz 2-y kafedry rentgenologii i radiologii TSentral'nogo instituta usovershenstvovaniya vrachey (zav. - prof. Yu.N.Sokolov), 2-y kafedry khirurgii (zav. - prof. B.K.Osipov), bol'nitsy No.50 (glavnyy vrach N.P.Brusova).

(REGIONAL ILEITIS)

APPROVED FOR RELEASE: 07/19/2001 CIA-RDP86-00513R001445520020-8"

"APPROVED FOR RELEASE: 07/19/2001 CIA-RDP86-00513R001445520020-8

ROZANOV, I.B.; MANEVICH, V.L.

[Polyposis as precancer of the stomach] Polipoz kak predrak zheludka. Moskva, TSentr. in-t usovershenstvovaniia vrachei, 1961. 166 p. (MIRA 15:6)

(STOMACH—CANCER)

APPROVED FOR RELEASE: 07/19/2001 CIA-RDP86-00513R001445520020-8"

"APPROVED FOR RELEASE: 07/19/2001 CIA-RDP86-00513R001445520020-8

ROZANOV, Ivan Grigor'yevich, starshiy nauchnyy sotrudnik; ZAVITAYEV, Petr Alekseyevich, starshiy nauchnyy sotrudnik; SKATKIN, M.N., redaktor; FOMENKO, A.S., redaktor; DZHATIYEV, S.G., tekhnicheskiy redaktor

[Handicraft lessons for the fourth grade] Uroki ruchnogo truda v chetvertom klasse. Pod red. Skatkina. Izd. 2-oe, dop. i perer. Moskva, Gos.uchebno-pedagog. izd-vo M-va prosv. RSFSR, 1956. 231 p. (MIRA 10:11)

1. Institut teorii i istorii pedagogiki (for Rozanov). 2. Institut metodov obucheniya Akademii pedagogicheskikh nauk RSFSR (for Zavitayev). 3. Chlen-korrespondent Akademii pedagogicheskikh nauk RSFSR (for (Skatkin)

(Handicraft)

APPROVED FOR RELEASE: 07/19/2001 CIA-RDP86-00513R001445520020-8"

"APPROVED FOR RELEASE: 07/19/2001 CIA-RDP86-00513R001445520020-8

ROZANOV, I.G., kandidat pedagogicheskikh nauk.

The pedagogical trend in children's toys. Det. khor. igr. no.1: 1-5 '55. (MLRA 10:2)

1. Starshiy nauchnyy sotrudnik Instituta istorii i teorii pedagogiki Akademii pedagogicheskikh nauk RSFSR.
(Toys)

APPROVED FOR RELEASE: 07/19/2001 CIA-RDP86-00513R001445520020-8"

"APPROVED FOR RELEASE: 07/19/2001 CIA-RDP86-00513R001445520020-8

ZHILIN, P.A., doktor istoricheskikh nauk, polkovnik, redaktor; ROZANOV, I.G. polkovnik, redaktor; LEVINSKAYA, N.Z., tekhnicheskiy redaktor.

[Most important operations of the Great Patriotic War of 1941-1945; a collection of articles] Vazhneishie operatsii Velikoi Otechestvennoi voiny 1941-1945 gg.; sbornik statei. Moskva, Voen.izd-vo M-va obor.SSSR, 1956. 622 p. (MLRA 10:4)

(World War, 1939-1945--Campaigns)

APPROVED FOR RELEASE: 07/19/2001 CIA-RDP86-00513R001445520020-8"

"APPROVED FOR RELEASE: 07/19/2001 CIA-RDP86-00513R001445520020-8

ROZANOV, Ivan Grigor'yevich, kand. pedagog. nauk; MANEVSKIY, A.D., red.; NAZAROVA, A.S., tekhn. red.

[About young designers, development of creativeness in design and technology in school children] O iunykh konstrukorakh; razvitie konstruktivno-tekhnicheskogo tvorchestva shkol'nikov. Moskva, Izd-vo "Znanie," 1961. 45 p. (Vsesoiuznoe obshchestvo po rasprostraneniiu politicheskikh i nauchnykh znanii. Ser.11, Pedagogika, no.10) (MIRA 15:2)
(Technical education)

APPROVED FOR RELEASE: 07/19/2001 CIA-RDP86-00513R001445520020-8"

"APPROVED FOR RELEASE: 07/19/2001 CIA-RDP86-00513R001445520020-8

BULATOV, N.P.; YESIPOV, B.P.; ROZANOV, I.G.; SHCHUKIN, S.V.; DANILOV, M.A.; REZNIKOV, L.I.; SKATKIN, M.N.; YUS'KOVICH, V.F.

I.I. Babushkin; obituary. Fiz. v shkole 17 no.1:96 Ja-F '57. (MLRA 10:2)

(Babushkin, Ivan Ivanovich, 1899-1956)

APPROVED FOR RELEASE: 07/19/2001 CIA-RDP86-00513R001445520020-8"

"APPROVED FOR RELEASE: 07/19/2001 CIA-RDP86-00513R001445520020-8

IVANOVSKIY, L.Ye.; KOZAKOV, I.G.; KRASIL'NIKOV, N.T.; PIEKHAKOV, A.F.

Electrolysis of chloride melts with anodes of NbO and NbO_2.
Trudy Inst. elektrokhim. UFAN SSSR no.5:111-117 '64.
(MIRA 18:2)

APPROVED FOR RELEASE: 07/19/2001 CIA-RDP86-00513R001445520020-8"

"APPROVED FOR RELEASE: 07/19/2001 CIA-RDP86-00513R001445520020-8

24530

26.2120

S/147/61/000/002/009/015
E194/E184

AUTHORS: Yakin, O.N., and Rozanov, I.G.

TITLE: Design of a low power turbine by means of nomograms

PERIODICAL: Izvestiya vysshikh uchebnykh zavedeniy, Aviatsionnaya tekhnika, 1961, No.2, pp. 94-102

TEXT: In turbine design it is often necessary to make a number of laborious calculations on variant designs. This article proposes the use of a nomogram to facilitate the selection of design parameters. The design data usually given are: N_T, the turbine output; Π_T, the pressure drop; P_0^*, T_0^*, the total inlet pressure and temperature; and n, the turbine speed. Other design features are sometimes given such as the number and shape of the nozzles, the height of the blades. Two additional graphs are used with the nomogram including that shown in Fig.1, which gives the relationship between the turbine efficiency η_T and the main parameters u/C_{ad}, plotted from a well known equation, with appropriate conditions and limitations. The main diagram, Fig.2, given below is calculated on the following assumptions: the angle of flow in the axial gap $\alpha_1 = 20^o$;

Card 1/8

APPROVED FOR RELEASE: 07/19/2001 CIA-RDP86-00513R001445520020-8"

"APPROVED FOR RELEASE: 07/19/2001 CIA-RDP86-00513R001445520020-8

24530

Design of a low power turbine S/147/61/000/002/009/015
E194/E184

the velocity coefficient in the nozzle $\varphi = 0.96$; the adiabatic index $k = 1.4$; the gas constant $R = 29.3$ kgm/kg°C.
The nomogram has sixteen scales as follows: 1) the pressure drop on the turbine and the associated adiabatic work; 2) the pressure drop on the turbine and the associated referred value of flow density allowing for losses; 3) the peripheral velocity; 4) the efficiency; 5) the referred work done by the turbine; 6) the referred output of the turbine; 7) the gas flow through the turbine; 8) the necessary area of the flow path in the axial gap perpendicular to the turbine axis; 9) the partiality factor ε; 10) the annular area swept by the runner blades in the axial gap; 11) the turbine speed; 12) the mean diameter of the turbine; 13a) the height of the runner blades in the axial gap; 13b) a further expression for the height of runner blades used in determining the stress in the runner blades; 14) a parameter characterising the relative blade height; 15) the tensile stress in the blade root. The method of determining the main parameters is a first approximation because the efficiency value used allows only for the so-called total losses in the blading and when the main dimensions have been determined it is necessary to determine

Card 2/8

APPROVED FOR RELEASE: 07/19/2001 CIA-RDP86-00513R001445520020-8"

"APPROVED FOR RELEASE: 07/19/2001 CIA-RDP86-00513R001445520020-8

24530

Design of a low power turbine by S/147/61/000/002/009/015
E194/E184

the losses in the radial gap and partiality losses, and an approximate method of doing this is suggested. The graph of Fig.3 is used to find the optimum ratio between the height and partiality factor. A numerical worked example of use of the nomogram is given.
There are 1 nomogram, 2 graphs , 1 table and 4 Soviet references.

ASSOCIATION: Kafedra 201, Moskovskiy aviatsionnyy institut (Department 201, Moscow Aviation Institute)

SUBMITTED: September 23, 1960

Card 3/8

APPROVED FOR RELEASE: 07/19/2001 CIA-RDP86-00513R001445520020-8"

"APPROVED FOR RELEASE: 07/19/2001 CIA-RDP86-00513R001445520020-8

YEMIN, O.N.; ROZANOV, I.G.

Using nomograms in designing low-powered turbines. Izv. vys. ucheb. zav.; av.tekh. 4 no.2:94-102 '61. (MIRA 14:3)

1. Moskovskiy aviatsionnyy institut, kafedra 201.
(Gas turbines—Design and construction)

APPROVED FOR RELEASE: 07/19/2001 CIA-RDP86-00513R001445520020-8"

"APPROVED FOR RELEASE: 07/19/2001 CIA-RDP86-00513R001445520020-8

ROZANOV, I. N.

ROZANOV, I. N., SHNVICH, I. I., and NOVOKANOV, V. P.

"High-Frequency Amplifier for Seismic Prospecting on the Basis of the Amplifier at the Station EKAO-1," Razvedka i Okhrana Nedr, No. 2, pp 29-32, 19[illegible]

SO: M-3[illegible], 2 Sep 55

APPROVED FOR RELEASE: 07/19/2001 CIA-RDP86-00513R001445520020-8"