"APPROVED FOR RELEASE: 07/13/2001 CIA-RDP86-00513R001445620002-7

1ST AND 2ND ORDERS

PROCESSES AND PROPERTIES INDEX

3RD AND 4TH ORDERS

BC

B-2-2

Determination of minute quantities of morphine and opium. A. D. Romanenko (Farm. Zhur., 1932, 8—9, 346—351).—(a) HIO_3 (5%, 1 c.c.) and aq. NH_3 (10%, 0·2 c.c.) are added to 2 c.c. of the slightly acid sample, the colour being compared with that of a standard after 2 and 5 min. (b) The sample (3 c.c.) is treated with 1 drop of $CuSO_4$ in HCl, 0·2—0·4 c.c. of H_2O_2, and 0·2 c.c. of aq. NH_3, and the colour compared with that of a standard after 15—20 min. CH. ABS.

ASM-SLA METALLURGICAL LITERATURE CLASSIFICATION

APPROVED FOR RELEASE: 07/13/2001 CIA-RDP86-00513R001445620002-7"

"APPROVED FOR RELEASE: 07/13/2001 CIA-RDP86-00513R001445620002-7

BC

1ST AND 2ND ORDERS

3RD AND 4TH ORDERS

PROCESSES AND PROPERTIES INDEX

A-4

Harmine: preparation from the root Peganum harmala, L. A. D. Rozenfeld (Farm. Zhur., 1930, 183—186).—A 3% yield was obtained.
CHEMICAL ABSTRACTS.

ASM-SLA METALLURGICAL LITERATURE CLASSIFICATION

MATERIALS INDEX

AUTHOR INDEX

APPROVED FOR RELEASE: 07/13/2001 CIA-RDP86-00513R001445620002-7"

"APPROVED FOR RELEASE: 07/13/2001 CIA-RDP86-00513R001445620002-7

PROCESSES AND PROPERTIES INDEX

A new method for the determination of ergot in meal. A. D. Rozenfel'd and M. Ya. Tropp. *Trans. Ukrain. Inst. Expl. Pharm.* 1, 79-82(in Russian 82-3; in English, 83)(1938).—*p*-Dimethylaminobenzaldehyde in a H_2SO_4 soln. to which $FeCl_3$ is added forms the reagent. Meal pts. contg. ergot give a blue color with the reagent which is proportional to the quantity of alkaloid present. This method is accurate to a concn. of 12-[illegible]. R. Levine

ASM-SLA METALLURGICAL LITERATURE CLASSIFICATION

APPROVED FOR RELEASE: 07/13/2001 CIA-RDP86-00513R001445620002-7"

"APPROVED FOR RELEASE: 07/13/2001 CIA-RDP86-00513R001445620002-7

ROZENFEL'D, A.D., kand.meditsinskikh nauk; TEPLYAKOVA, Ye.V., kand. meditsinskikh nauk

Hygienic evaluation of the material for plywood pipes. Gig. i san. 25 no. 5:95-96 My '60. (MIRA 13:10)

1. Iz Leningradskogo sanitarno-gigiyenicheskogo meditsinskogo instituta.

(WATER PIPES)

APPROVED FOR RELEASE: 07/13/2001 CIA-RDP86-00513R001445620002-7"

"APPROVED FOR RELEASE: 07/13/2001 CIA-RDP86-00513R001445620002-7

ROZENFEL'D, Aleksandr Grigor'yevich; EZDRIN, Konstantin Borisovich; UKRAINCHIK, M.M., inzh., red.

[Construction of large-panel apartment houses according to the series 1605A Standard plan of the "Giprostroiindustriia" Institute; building of a residential block in Fili-Mazilovo in Moscow (practices of the Main Administration for Housing and Public Construction in the City of Moscow)]Stroitel'stvo krupnopanel'nykh zhilykh domov po tipovomu proektu serii 1605A Institua "Giprostroiindustriia"; zastroika zhilogo kvartala v Fili-Mazilovo v Moskve (opyt Glavmosstroia). Moskva, Gosstroiizdat, 1961. 53 p. (MIRA 15:8)

1. Akademiya stroitel'stva i arkhitektury SSSR. Institut organizatsii, mekhanizatsii i tekhnicheskoy pomoshchi stroitel'stvu. Byuro tekhnicheskoy informatsii. 2. Glavnyy konstruktor Instituta "Giprostroyindustriya" (for Rozenfel'd). 3. Rukovoditel' gruppy metodicheskikh kabinetov tresta "Mosorgstroy" Glavnogo upravleniya po stroitel'stvu i vosstanovleniyu zheleznodorozhnykh mostov (for Ezdrin).
(Moscow--Apartment houses)

APPROVED FOR RELEASE: 07/13/2001 CIA-RDP86-00513R001445620002-7"

"APPROVED FOR RELEASE: 07/13/2001 CIA-RDP86-00513R001445620002-7

VAYNBERG, G.D., inzh.; KRICHEVSKAYA, Ye.I., kand. tekhn. nauk; MAZALOV, A.N., inzh.; ROZENFEL'D, A.G., inzh.; FOLOMIN, A.I., doktor tekhn. nauk; TESLER, P.A., kand. tekhn. nauk; SHOLOKHOV, V.G., arkhit.; RUBANENKO, B.R., glav. red.; ROZANOV, N.P., zam. glav. red.; ONUFRIYEV, I.A., red.; YUDIN, Ye.Ya., red.; NASONOV, V.N., red.; ISIDOROV, V.V., red.; MAKARICHEV, V.V., red.; POLUBNEVA, V.I., inzh., red.

[Improving the durability of industrial built-up roofs] Voprosy povysheniia dolgovechnosti industrial'nykh sovmeshchennykh krysh. Moskva, Gosstroiizdat, 1962. 43 p. (MIRA 17:4)

1. Akademiya stroitel'stva i arkhitektury SSSR. Nauchno-issledovatel'skiy institut organizatsii, mekhanizatsii i tekhnicheskoy pomoshchi stroitel'stvu. 2. TSentral'nyy nauchno-issledovatel'skiy i proyektno-eksperimental'nyy institut industrial'nykh, zhilykh i massovykh kul'turno-bytovykh zdaniy Akademii stroitel'stva i arkhitektury SSSR (for Vaynberg, Krichevskaya, Mazalov, Rozenfel'd, Folomin). 3. Nauchno-issledovatel'skiy institut stroitel'noy fiziki Akademii stroitel'stva i arkhitektury SSSR (for Sholokhov). 4. Nauchno-issledovatel'skiy institut betona i zhelezobetona Akademii stroitel'stva i arkhitektury SSSR, Perovo (for Tesler).

APPROVED FOR RELEASE: 07/13/2001 CIA-RDP86-00513R001445620002-7"

"APPROVED FOR RELEASE: 07/13/2001 CIA-RDP86-00513R001445620002-7

ROTKOP, L.L., inzh.; ROZENFEL'D, A.I., inzh.

Filter protection of induction motors from working on two phases. Vest. elektroprom. 30 no.2:17-19 F '59. (MIRA 12:3)
(Electric motors, Induction)

APPROVED FOR RELEASE: 07/13/2001 CIA-RDP86-00513R001445620002-7"

"APPROVED FOR RELEASE: 07/13/2001 CIA-RDP86-00513R001445620002-7

SOV/110-59-2-5/21

AUTHORS: Rotkop, L.L. and Rozenfel'd, A.I., Engineers

TITLE: A Filter Method of Protecting Induction Motors Against Operating on Two Phases (Fil'trovaya zashchita asinkhronnykh dvigateley ot raboty na dvukh fazakh)

PERIODICAL: Vestnik Elektropromyshlennosti,1959,Nr 2,pp 17-19 (USSR)

ABSTRACT: If one of the phases of the power supply to a three-phase induction motor fails the motor is likely to be damaged and existing methods of protecting against such faults have various disadvantages. The authors have developed a method of protecting induction motors from faults of this kind which is based on the fact that when one phase fails a negative phase sequence voltage appears on the motor terminals and can be used to operate a relay and shut down the motor. A simple schematic circuit diagram is given in Fig 1; a resistance-capacitance filter is used to detect the negative phase sequence voltage. The method of designing the filter is then explained with reference to the equivalent circuit diagram of an induction motor operating on two phases only given in Fig 2. Formula (7) is derived for the negative phase sequence voltage, which is found to be of the order of 17 - 30 V for different

Card 1/2

APPROVED FOR RELEASE: 07/13/2001 CIA-RDP86-00513R001445620002-7"

"APPROVED FOR RELEASE: 07/13/2001 CIA-RDP86-00513R001445620002-7

SOV/110-59-2-5/21

A Filter Method of Protecting Induction Motors against Operating on Two Phases

kinds of motors. However, it has been found in practice that for most motors the negative phase sequence voltage is of the order of 25 - 45 V. Formulae are then given for the design of the filters. This method of protection has been found to work well in service. The method of protection is particularly recommended for large motors working unattended and in other cases where it is specially important that the motors should not fail. There are 2 figures and 4 Soviet references.

Card 2/2

APPROVED FOR RELEASE: 07/13/2001 CIA-RDP86-00513R001445620002-7"

"APPROVED FOR RELEASE: 07/13/2001 CIA-RDP86-00513R001445620002-7

BABKO, A.K., akademik; PILIPENKO, A.T. [Pylypenko, A.T.]; ROZENFEL'D, A.L. [Rozenfel'd, H.L.]

Determination of microquantities of arsenic. Dop. AN URSR no.8:1069-1071 '62. (MIRA 18:2)

1. Kiyevskiy gosudarstvennyy universitet.

APPROVED FOR RELEASE: 07/13/2001 CIA-RDP86-00513R001445620002-7"

"APPROVED FOR RELEASE: 07/13/2001 CIA-RDP86-00513R001445620002-7

BABKO, A.K.; PILIPENKO, A.T.; ROZENFEL'D, A.L.

Determination of the microquantities of arsenic in alkaline solutions. Zav. lab. 30 no.9:1060-1061 '64. (MIRA 18:3)

1. Kiyevskiy gosudarstvennyy universitet imeni Shevchenko.

APPROVED FOR RELEASE: 07/13/2001 CIA-RDP86-00513R001445620002-7"

"APPROVED FOR RELEASE: 07/13/2001 CIA-RDP86-00513R001445620002-7

KUSHNIR, Yu.M.; ROZENFEL'D, A.M.; ZAYTSEV, P.V.; KOP'YEVA, N.A.; ROZENFEL'D, L.B.

Attachment for the EEM-50 emission microscope for studying secondary emitters. Zav.lab. 30 no.12:1512-1513 '64.

(MIRA 18:1)

APPROVED FOR RELEASE: 07/13/2001 CIA-RDP86-00513R001445620002-7"

"APPROVED FOR RELEASE: 07/13/2001 CIA-RDP86-00513R001445620002-7

GORELIK, S.S.; ROZENFEL'D, A.M.; SKAKOV, Yu.A.; SPIRIDONOV, V.B.

Mechanism of the formation and disappearance of twins during the heating of deformed nickel-chromium alloys. Izv. vys. ucheb. zav.; chern. met. no.2:105-111 '60. (MIRA 15:5)

1. Moskovskiy institut stali.
(Nickel-chromium alloys—Metallography)
(Crystal lattices)

APPROVED FOR RELEASE: 07/13/2001 CIA-RDP86-00513R001445620002-7"

"APPROVED FOR RELEASE: 07/13/2001 CIA-RDP86-00513R001445620002-7

GORELIK, S.S.; ROZENFEL'D, A.M.; SKAKOV, Yu.A.; SPIRIDONOV, V.B.

Investigating the nichrome recrystallization process following small deformations with use of the EEM-75 emission microscope. Izv. vys. ucheb. zav.; chern. met. no.1:159-166 '60. (MIRA 13:1)

1.Moskovskiy institut stali i nauchno-issledovatel'skiy institut; pochtovyy yashchik No.4064.
(Nichrome--Metallography)

APPROVED FOR RELEASE: 07/13/2001 CIA-RDP86-00513R001445620002-7"

"APPROVED FOR RELEASE: 07/13/2001 CIA-RDP86-00513R001445620002-7

AUTHORS: Rozenfel'd, A. M., Zaytsev, P. V. SOV/48-23-4-20/21

TITLE: A New Model of an Emission Electron Microscope for the Study of the Thermo- and Secondary Emitter (EEM-50) (Novaya model' emissionnogo elektronnogo mikroskopa dlya issledovaniya termo- i vtorichnykh emitterov (EEM-50))

PERIODICAL: Izvestiya Akademii nauk SSSR, Seriya fizicheskaya, 1959, Vol 23, Nr 4, pp 527 - 530 (USSR)

ABSTRACT: The attainable vacuum in emission microscopes is of decisive importance for resolution, as it is necessary to attain pressures up to $2 - 5.10^{-5}$ torr. The high vacuum causes difficulties with respect to the seals in general and especially as concerns the seals of the adjusting and governing appliances to be operated from outside. Rubber seals of the usual construction are not sufficient and therefore, combined rubber-metal seals were developed to meet the high requirements. The new seals, however, cause complications in the construction, as well as in the operational safety and simplicity with the appliances mentioned. The instrument developed by the authors features an immersion object lens with an object chamber. The cathode with the emitter to be investigated can be shifted in a vertical plane to the optical

Card 1/2

APPROVED FOR RELEASE: 07/13/2001 CIA-RDP86-00513R001445620002-7"

"APPROVED FOR RELEASE: 07/13/2001 CIA-RDP86-00513R001445620002-7

A New Model of an Emission Electron Microscope for the Study of the Thermo- and Secondary Emitter (EEM-50) SOV/48-23-4-20/21

axis. The object chamber has a cylindrical shape and is sealed off from the remaining inside space of the instrument. Other electron optical parts are accurately described. The vacuum system is then dealt with and the pressure distribution in the microscope is described. The pressure is measured with an ionometer. The instrument EEM-50 was developed from the EEM-75. There are 2 figures and 2 Soviet references.

Card 2/2

APPROVED FOR RELEASE: 07/13/2001 CIA-RDP86-00513R001445620002-7"

"APPROVED FOR RELEASE: 07/13/2001 CIA-RDP86-00513R001445620002-7

ROZENFEL'D, A.M.; ZAYTSEV, P.V.

Magnetic object lens for an emission electron microscope. Izv.AN SSSR.Ser.fiz. 25 no.6:713-716 Je '61. (MIRA 14:6)
(Electron microscope)

APPROVED FOR RELEASE: 07/13/2001 CIA-RDP86-00513R001445620002-7"

"APPROVED FOR RELEASE: 07/13/2001 CIA-RDP86-00513R001445620002-7

KUSHNIR, Yu.M.; FETISOV, D.V.; ROZENFEL'D, L.B.; ROZENFEL'D, A.M.

Russian electron microscopes for a direct examination of solid objects; survey. Zav. lab. 27 no. 12:1528-1535 '61. (MIRA 15:1)
(Electron microscope)

APPROVED FOR RELEASE: 07/13/2001 CIA-RDP86-00513R001445620002-7"

"APPROVED FOR RELEASE: 07/13/2001 CIA-RDP86-00513R001445620002-7

ROZENFEL'D, A.M.; ZAYTSEV, P.V.

New model of the emission electron microscope for the investigation of thermionic and secondary emitters. Izv. AN SSSR. Ser. fiz. 23 no.4: 527-530 '59. (MIRA 12:5)
(Electron microscope) (Electron emission)

APPROVED FOR RELEASE: 07/13/2001 CIA-RDP86-00513R001445620002-7"

"APPROVED FOR RELEASE: 07/13/2001 CIA-RDP86-00513R001445620002-7

ROZENFEL'D, A.M., inzh.

Simplified calculations to determine the wind velocity withstood by ships. Sudostroenie 24 no.2:1-6 F '58. (MIRA 11:3)
(Stability of ships)

APPROVED FOR RELEASE: 07/13/2001 CIA-RDP86-00513R001445620002-7"

"APPROVED FOR RELEASE: 07/13/2001 CIA-RDP86-00513R001445620002-7

Rozenfeld, A. M.

275

A HIGH-RESOLUTION EMISSION ELECTRON MICROSCOPE. O. V. Spivak and A. M. Rozenfeld. Translated from Izvest. Akad. Nauk S.S.S.R. Ser. Fiz. 15, 317-22(1951). 13p. (AEC-tr-1962)

APPROVED FOR RELEASE: 07/13/2001 CIA-RDP86-00513R001445620002-7"

"APPROVED FOR RELEASE: 07/13/2001 CIA-RDP86-00513R001445620002-7

21399

2,4 3300

S/032/61/027/012/012/015
B104/B102

AUTHORS: Kushnir, Yu. M., Fetisov, D. V., Rozenfel'd, L. B., and Rozenfel'd, A. M.

TITLE: Domestic electron microscopes for direct examination of compact objects

PERIODICAL: Zavodskaya laboratoriya, v. 27, no. 12, 1961, 1528 - 1535

TEXT: The first part of this review paper deals with field-emission microscopes. A microscope of A. M. Rozenfel'd and P. V. Zaytsev (Izvestiya AN SSSR, ser. fizich. (in print)) and designed for testing thermionic and secondary-electron emitters is described. It differs from the ЭЭМ-75 (EEM-75) microscope in its vacuum system (10^{-6} mm Hg) and magnetic objective lens (Fig. 1). 40 kv can be applied between the cathode and anode (distance 2.5 mm) of the objective lens. The resolution can thus be increased to 350 - 400 Å. The objective lens permits the use of both electron and ion sources (Fig. 3). Air, hydrogen, helium, argon, and other ions can be used for exciting secondary electron emission.

Card 1/5

APPROVED FOR RELEASE: 07/13/2001 CIA-RDP86-00513R001445620002-7"

"APPROVED FOR RELEASE: 07/13/2001 CIA-RDP86-00513R001445620002-7

21399
S/032/61/027/012/012/015
B104/B102

Domestic electron microscopes for ...

In this case, the resolution is approximately 2000 Å. For the ЭЭМ-50 (EEM-50) microscope, an electrostatic immersion objective is being developed, which is designed to stretch and heat the specimen during examination. It can also be used for taking motion pictures of rapid processes. A field-emission microscope with electrostatic optics, developed by B. I. Popov and A. V. Druzhinin (2-e Soveshchaniye po elektronnoy mikroskopii, Nauchno-tekhnicheskoye obshchestvo im. A. S. Popov (annotatsii dokladov), M. (1958); Radiotekhnika i elektronika, no. 8 (1958)), is mentioned. The second part of this paper deals with reflecting electron microscopes which are known to operate like optical reflecting microscopes and have no high resolution owing to the large scattering of electron energies after reflection. At present, neither Russia nor other countries have such industrial electron microscopes. Some Japanese, British, and Russian transmission electron microscopes have attachments for observations in reflected light (УЭМ-100 (UEM-100); УЭМБ-100 (UEMB-100); УЭМВ-100 (UEMV-100)). The third part deals with scanning microscopes whose resolution reaches 500 - 200 Å when operating with secondary electrons. When operating with X-rays, the resolvable distance is

Card 2/5

APPROVED FOR RELEASE: 07/13/2001 CIA-RDP86-00513R001445620002-7"

"APPROVED FOR RELEASE: 07/13/2001 CIA-RDP86-00513R001445620002-7

21399

Domestic electron microscopes for ... S/032/61/027/012/012/015
B104/B102

approximately 1 . A resolution of approximately 800 Å was obtained for some objects examined under Soviet scanning microscopes with X-ray analyzers. These microscopes play an important role in the investigation of p-n junctions. The direct X-ray image was studied in previous experiments. In this case, the electrode probe scans a certain part of the specimen surface (0.3·0.3 mm). 50 pictures per sec can be developed with 35 2 (35LKB2B) kinescope. Microchemical analyses with scanning microscopes are also described. The fourth part of the paper deals with reflection electron microscopes, in which accelerated electrons are slowed down and reflected in the microfield of the specimen. The image is determined by this microfield. The theoretical resolution of these microscopes is approximately 1000 Å. Domestic microscopes differ from foreign types in that the images are produced in the vacuum part, whereby the quality of microphotographs is essentially improved. Magnification is about 2000. There are 10 figures and 25 references: 16 Soviet and 9 non-Soviet. The three most recent references to English-language publications read as follows: D. A. Melford a. P. Duncumb. Metallurgia, 59, 205 (1960); P. Duncumb. Brit. J. Appl. Phys., 10, 420 (1959); 11, 169

Card 3/5

APPROVED FOR RELEASE: 07/13/2001 CIA-RDP86-00513R001445620002-7"

"APPROVED FOR RELEASE: 07/13/2001 CIA-RDP86-00513R001445620002-7

21399

S/032/61/027/012/012/015
B104/B102

Domestic electron microscopes for ...

(1960).

Fig. 1. Emission microscope for examination of thermionic and secondary-electron emitters.

Legend: (1) Cathode of immersion objective; (2) focusing electrode; (3) anode; (4) diaphragm, (5) projection lens; (6) screen of finite representation; (7) photoplate; (8) and (9) cathode and anode of source of primary electrons.

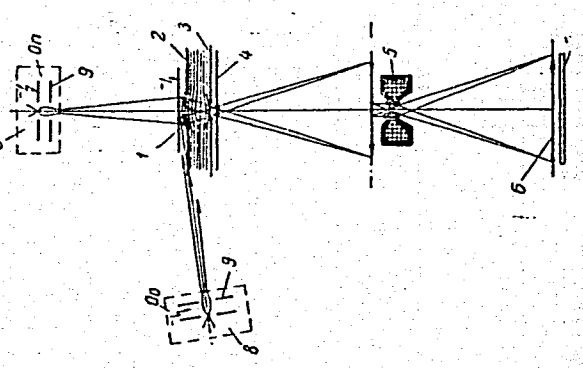

Card 4/5

APPROVED FOR RELEASE: 07/13/2001 CIA-RDP86-00513R001445620002-7"

"APPROVED FOR RELEASE: 07/13/2001 CIA-RDP86-00513R001445620002-7

21399
S/032/61/027/012/012/015
B104/B102

Domestic electron microscopes for ...

Fig. 2. Magnetic objective for emission microscope.
Legend: (1) cathode; (2) anode; (3) upper pole shoe; (4) ring insertion of non-magnetic material; (5) lower pole shoe; (6) diaphragm.

Fig. 3. Objective with ion source.
Legend: (1) and (2) anode and cathode of ion source; (3) and (4) cathode and anode of objective; (5) pole shoes of objective.

Fig. 2

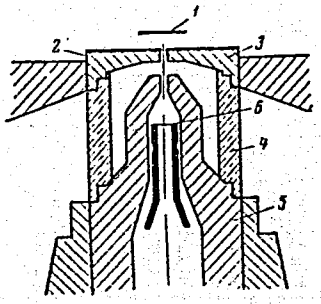

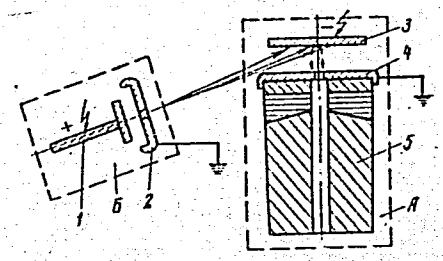

Fig. 3

Card 5/5

APPROVED FOR RELEASE: 07/13/2001 CIA-RDP86-00513R001445620002-7"

"APPROVED FOR RELEASE: 07/13/2001 CIA-RDP86-00513R001445620002-7

CA

14

PROCESSES AND PROPERTIES INDEX

Brilliant bile broth for the determination of coli aerogenes group in water. I. S. Ol'kenitskii and A. N. Rozenfel'dt. *Lab. Prakt.* (U. S. S. R.) 15, No. 10, 9-11 (1940).—The object of the expts. was to det. to what extent gas formation on Danham medium signifies the presence of the coli-aerogenes group. The Danham medium used consisted of broth (pH 6.0) + lactose 1% + ox bile 2% + brilliant green 1% (1:100000). Direct inoculations on the brilliant-broth were also carried out without a preliminary inoculation. Nonchlorinated river water with a 0.01-0.100 titer produced gas after 24 hrs. on the broth with brilliant green (0.1-1.0 ml.). A parallel investigation of river water (nonchlorinated) according to the method of Elkman and with the green broth showed that pos. results (presence of coli-aerogenes bacteria) were obtained 221 times by the method of Elkman and 219 times with the brilliant-broth method, and that neg. results were obtained 38 and 41 times, resp. The brilliant broth acts bacteriostatically on the whole water flora, except coli aerogenes. Parallel investigations showed that the Elkman method does not produce reliable results with chlorinated water. It is supposed that,

ASM-SLA METALLURGICAL LITERATURE CLASSIFICATION

APPROVED FOR RELEASE: 07/13/2001 CIA-RDP86-00513R001445620002-7"

"APPROVED FOR RELEASE: 07/13/2001 CIA-RDP86-00513R001445620002-7

157T15

[illegible], A. S.

Dec 49

USSR/Electricity - Transmission Lines Overvoltages

"Calculation of the Electrostatic Component of Induced Overvoltages," D. V. Razevig, Cand Tech Sci, A. S. Rozenfel'ts, Engr, Moscow Power Eng Inst imeni Molotov, 4 pp

"Elektrichestvo" No 12

Sets forth procedure for calculating electrostatic component of induced overvoltages on overhead transmission lines. Method is suitable for analysis of cases where support or cable is struck directly by lightning. Includes nine graphs. Submitted 5 Feb 49.

PA 157T15

APPROVED FOR RELEASE: 07/13/2001 CIA-RDP86-00513R001445620002-7"

"APPROVED FOR RELEASE: 07/13/2001 CIA-RDP86-00513R001445620002-7

SOV/144-58-11-1/17

AUTHOR: Rozenfel'd, A. S. (Engineer)

TITLE: The Calculation of Transient Processes in Linear Circuits (K raschetu perekhodnykh protsessov v lineynykh tsepyakh)

PERIODICAL: Izvestiya vysshikh uchebnykh zavedeniy, Elektromekhanika, 1958, Nr 11, pp 3-12 (USSR)

ABSTRACT: The behaviour of an electrical circuit may be determined from a set of differential equations such as Eq (1) which gives the relationship between current and voltage. A solution of this set of equations gives the current in any branch for voltages applied at any free terminals of the circuit. It fails, however, to give circuit conditions at the instant of switching; this defect may be remedied by using the concept of piece-wise linear functions, as described in Ref 3. Differentiation of a piece-wise linear function is carried out as in Eq (2) with the aid of unit and pulse functions. Eq (3) represents the relationship between currents and voltages and their derivatives at the moment of switching. When using the classical method the problem is simplified by using the initial conditions; these are found by discovering separately what the current in coils and voltages across condensers are at the instant of switching. In the case of complicated circuits this can be extremely

Card 1/3

APPROVED FOR RELEASE: 07/13/2001 CIA-RDP86-00513R001445620002-7"

"APPROVED FOR RELEASE: 07/13/2001 CIA-RDP86-00513R001445620002-7

tedious. In the general case when the characteristic equation has n different roots of various multiplicities the solution may be represented by Eq (4). By differentiating this expression an algebraic system is obtained from which the transient component of the current may be found as in Eq (5). In the simplest case, when all the roots are simple ones, the solution (5) may be found as the determinant at the bottom of page 5. When multiple roots are present the procedure is more complicated and the recurrence formulae of (10) must be used. The proposed method may be summed up as follows: (A) determine the steady-state component of current after the instant of switching; (B) determine the step in the total current and the initial value of the transient component and its derivatives at the instant of switching; (C) determine the transient currents. When the network excitation can be put in the form of an exponential function the formula (16) is derived for the current in a branch. By using the compensation theorem the usefulness of the method is extended also to active networks; the method is illustrated

APPROVED FOR RELEASE: 07/13/2001 CIA-RDP86-00513R001445620002-7"

"APPROVED FOR RELEASE: 07/13/2001 CIA-RDP86-00513R001445620002-7

SOV/144-58-11-1/17

The Calculation of Transient Processes in Linear Circuits

by the example at the bottom of page 9. The Appendix describes in some detail how the coefficients are derived for the transient component of current when the characteristic equation contains multiple roots. Acknowledgment is made to B. I. Yakhinson. There are 4 Soviet references.

ASSOCIATION: Odesskaya teploelektrotsentral' (Odessa Thermal Power Station).

SUBMITTED: October 18, 1958.

Card 3/3

APPROVED FOR RELEASE: 07/13/2001 CIA-RDP86-00513R001445620002-7"

"APPROVED FOR RELEASE: 07/13/2001 CIA-RDP86-00513R001445620002-7

AUTHOR: Rozenfel'd, A.S., Engineer 91-58-5-16/35

TITLE: Group Protection of Minimal Voltage in the Bus Bar Internal Consumption Section (Gruppovaya zashchita minimal'nogo napryazheniya sektsii shin sobstvennykh nuzhd)

PERIODICAL: Energetik, 1958, Nr 5, pp 20-21 (USSR)

ABSTRACT: In the internal consumption sections of some thermal electric power stations, group protection of minimal voltage is used, which operates by only switching off the motors. The circuit diagram is represented in the figure. The starting device consists of 3 voltage relays which start operating when the voltage drops below a certain value. These relays and intermediate relays which in turn switch off the motors. The device is fitted into a casing of the secondary commutation of the transformer. The group protection is more economical than the present system, because it replaces 4 voltage relays and 2 time relays in each of the 9 internal consumption sections of the station. The new installation has been in operation for 2 years. There is 1 figure.

AVAILABLE: Library of Congress

Card 1/1 1. Power plants - Maintenance

APPROVED FOR RELEASE: 07/13/2001 CIA-RDP86-00513R001445620002-7"

"APPROVED FOR RELEASE: 07/13/2001 CIA-RDP86-00513R001445620002-7

AUTHOR: Rozenfel'd, A.S., Engineer 91-58-5-17/35

TITLE: Simplification of the Signalization and Protection From Overloads (Uproshcheniye signalizatsii i zashchity ot peregruzok)

PERIODICAL: Energetik, 1958, Nr 5, p 21 (USSR)

ABSTRACT: In thermal electric power stations, the protection from overloads, and the central signalization are equipped with individual heat-resistant time relays. These devices were simplified in the following way: the protection from overloads has been equipped with a general time relay; the coordination signalization of the protections is effected by a two-tube board with a testing key; all busbars of the central signalization of the chief switchboard have minus polarity in order to reduce the extension of the plus chains. These measures led to a considerable saving of time relays and control cable and increased the reliability of the signalization devices.

AVAILABLE: Library of Congress

Card 1/1 1. Power plants - Maintenance

APPROVED FOR RELEASE: 07/13/2001 CIA-RDP86-00513R001445620002-7"

"APPROVED FOR RELEASE: 07/13/2001 CIA-RDP86-00513R001445620002-7

ROZENFEL'D, A.S., inzh.; ROTKOP, L.L., inzh.

Device for finding grounded lines. Elek.sta. 29 no.8:84-85 Ag '58. (MIRA 11:11)

(Electric lines--Testing)

APPROVED FOR RELEASE: 07/13/2001 CIA-RDP86-00513R001445620002-7"

"APPROVED FOR RELEASE: 07/13/2001 CIA-RDP86-00513R001445620002-7

AUTHOR: Rozenfel'd, A.S., Engineer SOV/144-58-8-11/18

TITLE: On Calculating the Forced and the Free Components of the Transient Phenomena in Linear Circuits (K raschetu prinuzhdennoy i svobodnoy slagayushchikh perekhodnykh protsessov v lineynykh tsepyakh)

PERIODICAL: Izvestiya Vysshikh Uchebnykh Zavedeniy, Elektromekhanika, 1958, Nr 8, pp 85-90 (USSR)

ABSTRACT: In applied electrical problems it is in some cases necessary to determine solely the forced (steady state) regime or deviations from this regime which result from arbitrary disturbances. For this purpose it is necessary to have available formulae by means of which it is possible to calculate separately the forced and the free components of the transient processes in linear circuits. Such formulae can be obtained if the respective terms are separated in the Duhamel integral, which represents one of the most generally valid relations for calculating transient phenomena. In this case the Duhamel integral is calculated according to the generalized basic formula for definite integrals. One of the most general current-voltage-impedance

Card 1/9

APPROVED FOR RELEASE: 07/13/2001 CIA-RDP86-00513R001445620002-7"

"APPROVED FOR RELEASE: 07/13/2001 CIA-RDP86-00513R001445620002-7

On Calculating the Forced and the Free Components of the Transient Phenomena in Linear Circuits

relationships is expressed by the following variant of the Duhamel integral

$$i(t) = A(o)\cdot U(t) + \int_{t_o}^{t} U(\tau)\cdot A'(t-\tau)d\tau = A(o)\cdot U(t) +$$

$$+ \int U(\tau)\cdot A'(t-\tau)d\tau\Big|_{\tau = t} \qquad (1)$$

$$- \int U(\tau)\cdot A'(t-\tau)d\tau\Big|_{\tau=t_o} - \sum_{i=1}^{m} \int \left[U_i(\tau) - U_{i-1}(\tau) \right] A'(t-\tau)d\tau\Big|_{\tau=t_i},$$

Here t_o is time at the instant of application to the circuit of some arbitrary voltage $U(t)$, and t_i is the time at the instant of its removal. Because of inductive effects, the current $i(t)$ associated with $U(t)$ will continue to flow in the circuit after the time t. This leads to the alternative form of the right-hand side of Eq (1) involving a summation, over m repeated applications

APPROVED FOR RELEASE: 07/13/2001 CIA-RDP86-00513R001445620002-7"

"APPROVED FOR RELEASE: 07/13/2001 CIA-RDP86-00513R001445620002-7

of U(t) of such terms as $U_{i-1}(\tau)$ and $U_i(\tau)$ representing respectively the voltage in the circuit at the instants immediately preceding and immediately following an application. The term A(0) represents transient admittance at the time t=0, and $A'(t-\tau)$ is the time derivative of transient admittance which can be expressed as a sum of terms such as

$$C_i \cdot e^{p_i(t-\tau)} \quad \text{and} \quad C_k(t-\tau)^{\alpha} \cdot e^{p_k(t-\tau)} .$$

In the case of applying a continuous voltage U(t) to the circuit which was switched on in the distant past so that it can be assumed that $t_o \to -\infty$, the current can be determined by means of the formula:

$$i_n(t) = A(o) \cdot U(t) + \int U(\tau) \cdot A'(t-\tau) d\tau \Big|_{\tau=t} \qquad (2)$$

This imposed component of the current intensity is due to the continuous variations in the voltage U(t) after

APPROVED FOR RELEASE: 07/13/2001 CIA-RDP86-00513R001445620002-7"

"APPROVED FOR RELEASE: 07/13/2001 CIA-RDP86-00513R001445620002-7

the instant of switching on. According to Netushil (Ref 2) the attenuated free component of the current intensity of the transient process $i_c(t)$ can be calculated from the difference between the total current intensity $i(t)$ of the transient process and the imposed, forced component $i_n(t)$. If a voltage $U(t)$ is applied to the circuit continuously from the instant of switching on onwards, the free component of the current can be determined by means of the formula:

$$i_c(t) = -\int U(\tau)\cdot A'(t-\tau)d\tau\Big|_{\tau=t_o}. \qquad (3)$$

The current component $i(t)$ caused by the disturbances in the conductivity of the voltage $U(t)$ after the instant of switching on is determined by means of the sum:

$$i_p(t) = -\sum_{i=1}^{m}\int\left[U_i(\tau) - U_{i-1}(\tau)\right]\cdot A'(t-\tau)d\tau\Big|_{\tau=t_i}. \qquad (4)$$

APPROVED FOR RELEASE: 07/13/2001 CIA-RDP86-00513R001445620002-7"

"APPROVED FOR RELEASE: 07/13/2001 CIA-RDP86-00513R001445620002-7

SOV/144-58-8-11/18

On Calculating the Forced and the Free Components of the Transient Phenomena in Linear Circuits

The terms of this sum represent free components of the current which occur in each point t_j of the disturbance in the conductivity of the voltage $U(t)$. If the real parts of all the roots of the characteristic equations are negative, each of these free components of the current attenuates but the sum determining the current $i_p(t)$ represents a function which does not attenuate. This is the case for instance if the number of breaks in the continuity m is infinitely large and with increasing time t the discontinuous changes in the voltage continue to occur. Signals in communications and pulsed radio circuits usually have such a shape. The current $i_p(t)$ is thereby determined as the limit of the sum expressed by Eq (4) for $m \rightarrow \infty$. In a stable linear circuit this limit will always exist, since it follows from the very definition of the term "stability". The free attenuating component of the current $i_{cp}(t)$ can be determined in the case of the application of a sectionally continuous voltage $U(t)$ as the difference between the total current intensity of the transient process and its

Card 5/9

APPROVED FOR RELEASE: 07/13/2001 CIA-RDP86-00513R001445620002-7"

"APPROVED FOR RELEASE: 07/13/2001 CIA-RDP86-00513R001445620002-7

On Calculating the Forced and the Free Components of the Transient Phenomena in Linear Circuits

forced component $i_{np}(t)$

$$i_{cp}(t) = i_c(t,t_o) + i_p(t,m) - \left[i_p(t,m)\right] m \to \infty \qquad (5)$$

In calculating the components of the current intensity of the transient process $i_n(t)$, $i_c(t)$, $i_p(t,m)$ according to Eqs (2), (3) and (4), it is necessary to take that value of the indefinite integral for which the integration constant equals zero, since these values were determined from formulae calculated from the definite integrals, Eq (1). All the formulae were derived for one of the variants of the Duhamel integral. By applying the known method of changing over from one form of the integral to another, similar relations can be derived also for other variants. The formulae, Eqs (2), (3) and (4), given in the paper for calculating the current intensity, can also be applied for determining any magnitudes in linear circuits of any physical type. As far as the author is aware no work has been published on splitting the Duhamel

APPROVED FOR RELEASE: 07/13/2001 CIA-RDP86-00513R001445620002-7"

"APPROVED FOR RELEASE: 07/13/2001 CIA-RDP86-00513R001445620002-7

SOV/144-58-8-11/18

On Calculating the Forced and the Free Components of the Transient Phenomena in Linear Circuits

integral into the forced and free components. Various authors (Refs 3-6) dealt with determining the steady state regime in linear circuits as a result of the effect of arbitrary periodic forces. In some of these papers formulae are given for the case of continuous periodic forces acting on linear circuits, with characteristic equations having only simple roots. In spite of the fact that these formulae provide a solution for a particular problem only, they are less convenient for practical use than the here derived general formula, Eq (2). Ya. Z. Tsypkin (Ref 7) analyses the calculation of linear circuits for a particular type of periodic impulse consisting of rectangular pulses and of pauses. All these formulae can be derived from the generally valid relations, Eqs (2), (3) and (4) with appropriate limitations as regards the shape of the effects and the roots of the characteristic equations of the circuit. As an example, the author shows the transformation of one of the formulae published by P.A. Voronov (Ref 6) into the form of Eq (2) of this paper.

Card 7/9

APPROVED FOR RELEASE: 07/13/2001 CIA-RDP86-00513R001445620002-7"

"APPROVED FOR RELEASE: 07/13/2001 CIA-RDP86-00513R001445620002-7

SOV/144-58-8-11/18

On Calculating the Forced and the Free Components of the Transient Phenomena in Linear Circuits

The here derived formulae solve fully the problem of separate calculation of the forced and the free components of the transient process in the linear circuits. They can be applied directly for calculation of any continuous or sectionally continuous effects. The application of this formula is advisable, for instance, in cases in which it is necessary to calculate accurately the electrical circuits of systems of continuous or discrete automatic regulation and also in cases for which it is difficult to apply the frequency methods of Fourier; the latter occurs frequently in the case of sectionally continuous effects for which the Fourier series converge very slowly. For illustrating the method of application for the here derived generalized formulae, calculation formulae are derived for determining the current in a linear electric circuit, the characteristic equation of which has solely simple roots. Two cases are considered, namely:

Card 8/9 1) A non-sinusoidal voltage Q(t) is applied which has

APPROVED FOR RELEASE: 07/13/2001 CIA-RDP86-00513R001445620002-7"

"APPROVED FOR RELEASE: 07/13/2001 CIA-RDP86-00513R001445620002-7

SOV/144-58-8-11/18

On Calculating the Forced and the Free Components of the Transient Phenomena in Linear Circuits

a discontinuity only at the instant of switching on, t_0; 2) a non-sinusoidal periodic voltage, U(t), with r breaks in the continuity during each period of T, is applied to the circuit.
There are 7 references, 6 of which are Soviet, 1 French.

ASSOCIATION: Odesskaya teploelektrotsentral' (Odessa Thermal Power Station)

SUBMITTED: April 8, 1958

Card 9/9

APPROVED FOR RELEASE: 07/13/2001 CIA-RDP86-00513R001445620002-7"

"APPROVED FOR RELEASE: 07/13/2001 CIA-RDP86-00513R001445620002-7

ROZENFEL'D, A.S., inzh.

Automatic group reclosing in electric power plants. Elek.sta. 29 no.11:83 N '58. (MIRA 11:12)
(Electric power plants)

APPROVED FOR RELEASE: 07/13/2001 CIA-RDP86-00513R001445620002-7"

"APPROVED FOR RELEASE: 07/13/2001 CIA-RDP86-00513R001445620002-7

ROZENFEL'D, A.S. (Odessa)

Initial conditions in an electric network after "instant" switching. Izv. AN SSSR. Otd. tekh. nauk. Energ. i avtom. no.4:89-92 Jl-Ag '61. (MIRA 14:9)

(Electric networks) (Switching theory)

APPROVED FOR RELEASE: 07/13/2001 CIA-RDP86-00513R001445620002-7"

"APPROVED FOR RELEASE: 07/13/2001 CIA-RDP86-00513R001445620002-7

ROZENFEL'D, A. [illegible], inzh. (Odessa); YAKHINSON, B. [illegible], kand. tekhn. nauk (Odessa)

Switching relationships and independent initial conditions for electrical networks. Elektrichestvo no.3:50-53 Mr '62. (MIRA 15:2)
(Electric networks)
(Electric relays)

APPROVED FOR RELEASE: 07/13/2001 CIA-RDP86-00513R001445620002-7"

"APPROVED FOR RELEASE: 07/13/2001 CIA-RDP86-00513R001445620002-7

ROZENFEL'D, A. S. (Odessa)

Concerning the use of operational calculus in the study of intermittent processes. Izv. AN SSSR. Otd. tekh. nauk. Energ. i avtom. no.6:145-149 N-D '62. (MIRA 16:1)

(Automatic control) (Calculus, Operational)

APPROVED FOR RELEASE: 07/13/2001 CIA-RDP86-00513R001445620002-7"

"APPROVED FOR RELEASE: 07/13/2001 CIA-RDP86-00513R001445620002-7

ROZENFEL'D, Abram Srul'yevich, inzh.

Determination of transients and steady-state processes in linear systems with sources of discontinuous action. Izv.vys.ucheb. zav.; elektromekh. 5 no.4:363-369 '62. (MIRA 15:5)

1. Odesskaya teploelektrotsentral'.
(Electric networks) (Electric relays) (Automatic control)

APPROVED FOR RELEASE: 07/13/2001 CIA-RDP86-00513R001445620002-7"

"APPROVED FOR RELEASE: 07/13/2001 CIA-RDP86-00513R001445620002-7

ROZENFEL'D, Abram Srulevich, assistent; YAKHINSON, Boris Izrailevich, kand. tekhn. nauk, dotsent

Kirchhoff's equations and laws on commutation in electrical networks. Izv. vys. ucheb. zav.; elektromekh. 6 no.4:423-429 '63. (MIRA 16:7)

1. Kafedra teoreticheskikh osnov elektrotekhniki Odesskogo elektrotekhnicheskogo instituta svyazi.
(Switching theory) (Electric networks)
(Commutation (Electricity))

APPROVED FOR RELEASE: 07/13/2001 CIA-RDP86-00513R001445620002-7"

"APPROVED FOR RELEASE: 07/13/2001 CIA-RDP86-00513R001445620002-7

ROZENFEL'D, A.E.

Laplace transformation and studies on transients. Izv. vys. ucheb. zav.; radiofiz. 7 no.3:546-552 '64. (MIRA 17:11)

1. Odesskiy energotekhnicheskiy institut svyazi.

APPROVED FOR RELEASE: 07/13/2001 CIA-RDP86-00513R001445620002-7"

"APPROVED FOR RELEASE: 07/13/2001 CIA-RDP86-00513R001445620002-7

ROZENFEL'D, A.S., kand. tekhn. nauk

Power leakage in high-speed switches. Izv. vys. ucheb. zav.; energ. 7 no.11:11-15 N '64 (MIRA 18:1)

1. Odesskiy elektrotekhnicheskiy institut svyazi. Predstavlena kafedroy teoreticheskikh osnov elektrotekhniki.

APPROVED FOR RELEASE: 07/13/2001 CIA-RDP86-00513R001445620002-7"

"APPROVED FOR RELEASE: 07/13/2001 CIA-RDP86-00513R001445620002-7

ROZENFELD, A. S.

"Sanitary Measures for Public Baths in Relation to the Epidemiology and the Prophylaxis of Epidermophytons." Cand Med Sci, Leningrad Sanitary Hygiene Medical Inst, Min Health RSFSR, Leningrad, 1954. (KL, No 3, Jan 55)

Survey of Scientific and Technical Dissertations Defended at USSR Higher Educational Institutions (12)
SO: Sum. No. 556, 24 Jun 55

APPROVED FOR RELEASE: 07/13/2001 CIA-RDP86-00513R001445620002-7"

"APPROVED FOR RELEASE: 07/13/2001 CIA-RDP86-00513R001445620002-7

AGGEYEV, P.K.; NESMEYANOVA, M.S.; ROZENFEL'D, A.S.; RUDEYKO, V.A.

Hygiene of houses of collective farmers and methods for their improvement. Trudy LSGMI 26:193-199 '56. (MLRA 10:6)

1. Kafedra kommunal'noy gigiyeny Leningradskogo sanitarno-gigiyenicheskogo meditsinskogo instituta. Zav. kafedroy - prof. P.K.Aggeyev.

(RURAL CONDITIONS,
hyg. of living quarters on collective farms in Russia (Rus))

APPROVED FOR RELEASE: 07/13/2001 CIA-RDP86-00513R001445620002-7"

"APPROVED FOR RELEASE: 07/13/2001 CIA-RDP86-00513R001445620002-7

ROZENFEL'D, A.S.

Sanitary mycological examination of premises and fittings of communal baths. Trudy LSGMI 26:249-255 '56. (MLRA 10:6)

1. Kafedra kommunal'noy gigiyeny Leningradskogo sanitarno-gigiyenicheskogo meditsinskogo instituta. Zav. kafedroy - prof. P.K.Aggeyev.

(SANITATION,
fungi in communal bathhouses (Rus))
(FUNGI,
in communal bathhouses (Rus))

APPROVED FOR RELEASE: 07/13/2001 CIA-RDP86-00513R001445620002-7"

"APPROVED FOR RELEASE: 07/13/2001 CIA-RDP86-00513R001445620002-7

ROZENFEL'D, A.S., kandidat meditsinskikh nauk

Sanitary measures in public baths in connection with the epidemiology and prevention of epidermophytosis. Gig. i san. 22 no.4:69-71 Ap '57. (MLRA 10:9)

1. Iz kafedry kommunal'noy gigiyeny Leningradskogo sanitarno-gigiyenicheskogo meditsinskogo instituta

(RINGWORM, prevention and control, in bath houses (Rus))
(PUBLIC HEALTH, bath houses, prev. of ringworm (Rus))

APPROVED FOR RELEASE: 07/13/2001 CIA-RDP86-00513R001445620002-7"

"APPROVED FOR RELEASE: 07/13/2001 CIA-RDP86-00513R001445620002-7

ROZENFEL'D, A.S., kand.med.nauk

Criticism of the sanitary regulations on sewage disposal into natural waters. Gig. i san. 22 no.5:67-69 My '57. (MIRA 10:10)

1. Iz kafedry kommunal'noy gigiyeny Leningradskogo sanitarno-gigiyenicheskogo meditsinskogo instituta.
(SEWAGE,
discharge in to water streams (Rus))
(WATER SUPPLY,
discharge of sewage into water streams (Rus))

APPROVED FOR RELEASE: 07/13/2001 CIA-RDP86-00513R001445620002-7"

"APPROVED FOR RELEASE: 07/13/2001 CIA-RDP86-00513R001445620002-7

ROZENFEL'D, A.S.

Disinfection of living quarters in epidemophytosis; method and results of determining the effectiveness of surface disinfection. Zhur.mikrobiol.epid. i immun. 28 no.3:106-108 Mr '57. (MIRA 10:6)

1. Iz kafedry kommunal'noy gigiyeny Leningradskogo sanitarno-gigiyenicheskogo meditsinskogo instituta.
(ANTISEPSIS AND ASEPSIS,
surface disinfection against fungi (Rus))

APPROVED FOR RELEASE: 07/13/2001 CIA-RDP86-00513R001445620002-7"

"APPROVED FOR RELEASE: 07/13/2001 CIA-RDP86-00513R001445620002-7

ROZENFELD, A.S., kand.med.nauk

Sanitary characteristics in planning field quarters on several new state grain farms in northern Kazakhstan. Gig. i san. 23 no.6:57-58 Je '58 (MIRA 11:7)

1. Iz kafedry kommunal'noy gigiyeny Leningradskogo sanitarno-gigiyenicheskogo meditsinskogo instituta.
(AGRICULTURE,
field quarters on state grain farms (Rus))
(KAZAKHSTAN--PUBLIC HEALTH, RURAL)

APPROVED FOR RELEASE: 07/13/2001 CIA-RDP86-00513R001445620002-7"

"APPROVED FOR RELEASE: 07/13/2001 CIA-RDP86-00513R001445620002-7

ROZENFEL'D, A.S.

Preliminary antiseptic treatment of pathological material for mycologic study in a case of epidermophytosis of the feet. Lab. delo 5 no.3:42-43 My-Je '59. (MIRA 12:6)

1. Iz kafedry kommunal'noy gigiyeny (zav. - prof. P.K. Aggeyev) Leningradskogo sanitarno-gigiyenicheskogo meditsinskogo instituta.
(RINGWORM) (BACTERIOLOGY--CULTURES AND CULTURE MEDIA)

APPROVED FOR RELEASE: 07/13/2001 CIA-RDP86-00513R001445620002-7"

"APPROVED FOR RELEASE: 07/13/2001 CIA-RDP86-00513R001445620002-7

ROZENFEL'D, A.S., kand.med.nauk

Hygienic evaluation of main thoroughfares. Gig.i san. 26 no.2: 3-8 F '61. (MIRA 14:10)

1. Iz kafedry kommunal'noy gigiyeny Leningradskogo sanitarno-gigiyenicheskogo meditsinskogo instituta.
(LENINGRAD--NOISE) (LENINGRAD--AIR--POLLUTION)

APPROVED FOR RELEASE: 07/13/2001 CIA-RDP86-00513R001445620002-7"

"APPROVED FOR RELEASE: 07/13/2001 CIA-RDP86-00513R001445620002-7

ROZENFEL'D, A.S., kand.med.nauk

Necessary increase in sanitary requirements for baths in connection with L.V.Shevliakov's article "Epidemiological characteristics of epidermophytosis and sanitary conditions of baths. Gig.i san. 26 no.3:86-87 Mr '61. (MIRA 14:7)
(RINGWORM) (BATHS)

APPROVED FOR RELEASE: 07/13/2001 CIA-RDP86-00513R001445620002-7"

"APPROVED FOR RELEASE: 07/13/2001 CIA-RDP86-00513R001445620002-7

ROZENFEL'D, A.S.

Street noise in small residential area. Trudy LSGMI no.68:35-45 '61. (MIRA 15:11)

1. Kafedra kommunal'noy gigiyeny Leningradskogo sanitarno-gigiyenicheskogo meditsinskogo instituta (zav. kafedroy - prof. A.I. Shtreys).

(LENINGRAD--NOISE CONTROL)

APPROVED FOR RELEASE: 07/13/2001 CIA-RDP86-00513R001445620002-7"

"APPROVED FOR RELEASE: 07/13/2001 CIA-RDP86-00513R001445620002-7

ROZENFEL'D, A.S.

Simultaneous determination in water of small concentrations of copper, lead and zinc. Trudy LSGMI no.68:144-149 '61. (MIRA 15:11)

1. Kafedra kommunal'noy gigiyeny Leningradskogo sanitarno-gigiyenicheskogo meditsinskogo instituta (zav. kafedroy - prof. A.I.Shtreys).

(WATER—ANALYSIS)

APPROVED FOR RELEASE: 07/13/2001 CIA-RDP86-00513R001445620002-7"

"APPROVED FOR RELEASE: 07/13/2001 CIA-RDP86-00513R001445620002-7

ROZENFEL'D, Aleksandr Semenovich; ZYATYUSHKOV, A.I., red.; LEBEDEVA, G.T., tekhn. red.

[Water and health; hygiene of water supply] Voda i zdorov'e; gigiena vodosnabzheniia. Leningrad, Medgiz, 1963. 29 p. (MIRA 16:10)

(WATER SUPPLY--HYGIENIC ASPECTS)

APPROVED FOR RELEASE: 07/13/2001 CIA-RDP86-00513R001445620002-7"

"APPROVED FOR RELEASE: 07/13/2001 CIA-RDP86-00513R001445620002-7

YAKHNEON, B.I.; ROZENFEL'D, A.S.

Dynamics of linear electric circuits in the case of cyclic switchings. Izv.vys.ucheb.zav.; radiofiz. 7 no.4:771-779 '64. (MIRA 18:1)

APPROVED FOR RELEASE: 07/13/2001 CIA-RDP86-00513R001445620002-7"

"APPROVED FOR RELEASE: 07/13/2001 CIA-RDP86-00513R001445620002-7

L 23683-66 EWT(1) IJP(c)

ACC NR: AR6005203 SOURCE CODE: UR/0058/65/000/009/D062/D063

AUTHORS: Perlin, Yu. Ye.; Rozenfel'd, Yu. B.

34

TITLE: On the theory of resonance fluorescence of local centers B

SOURCE: Ref. zh. Fizika, Abs. 9D492

REF. SOURCE: Uch. zap. Kishinevsk. un-t, no. 75, 1964, 1-11

TOPIC TAGS: fluorescence spectrum, phonon equilibrium, luminescence center, resonance line, excited electron state, line shape, electron transition

TRANSLATION: 2/ The authors develop a general theory of impurity resonance luminescence in the case when there is no time for phonon equilibrium to become established in the excited electron state. A modernized Wigner-Weisskopf method is used. Account is taken of the displacements of the equilibrium positions of the phonon coordinates. The change in the elastic constants is disregarded. Formulas are obtained for the probabilities of the resonance fluorescence (RF) and are used to obtain expressions describing the form of the excita-

Card 1/2

APPROVED FOR RELEASE: 07/13/2001 CIA-RDP86-00513R001445620002-7"

"APPROVED FOR RELEASE: 07/13/2001 CIA-RDP86-00513R001445620002-7

L 23683-66

ACC NR: AR6005203

tion and RF spectra. The authors consider several particular cases for the latter. If the excitation is by means of a sharp line and there is no phonon dispersion, the RF spectrum constitutes a complicated alternation of maxima, in which a phononless peak is separated. The RF spectrum recalls the Raman spectrum and the process in question is interpreted as Raman scattering, where the light interacts with the phonons via an electron of the local center. The equilibrium luminescence curve is obtained in the case when the exciting light and the pure electron transitions have identical frequencies. If the excitation is by a broad band and there is no phonon dispersion, then the RF spectrum is a 'picket fence' of equidistant lines of natural width. If the excitation is by means of a narrow line and little heat is released, the phononless line in the radiation spectrum duplicates the shape of the lines of the primary light, and in the excitation spectrum it has a natural width. The spectral RF curve near the frequencies of the purely electronic transitions coincides with the form of the curve of the equilibrium luminescence. Bibliography, 7 titles. N. Kristofel'.

SUB CODE: 20

Card 2/2

APPROVED FOR RELEASE: 07/13/2001 CIA-RDP86-00513R001445620002-7"

"APPROVED FOR RELEASE: 07/13/2001 CIA-RDP86-00513R001445620002-7

L 15179-65 EWT(1)/EWA(h) Pab ASD(a)-5/AFWL/AFETR/ESD(c)/ESD(dp)/ESD(gs) GG
ACCESSION NR: AP4048269 S/0141/64/007/004/0771/0779

AUTHORS: Yakhinson, B. I.; Rozenfel'd, A. S.

TITLE: Dynamics of linear electric circuits under cyclic switching

SOURCE: IVUZ. Radiofizika, v. 7, no. 4, 1964, 771-779

TOPIC TAGS: circuit theory, switching theory, transient response, difference equation, operator equation

ABSTRACT: A procedure is discussed for setting up a system of linear difference equations in investigations of the transients and stationary modes of a linear electric system, at the input of which an idealized instantaneously-acting switch is turned on and off repeatedly. This problem is of importance in the study of automatic control devices with many cyclic switch operations. The system is represented by a one-port active element, and the expression derived is in the form of a linear differential equation with piecewise-

Card 1/2

APPROVED FOR RELEASE: 07/13/2001 CIA-RDP86-00513R001445620002-7"

"APPROVED FOR RELEASE: 07/13/2001 CIA-RDP86-00513R001445620002-7

L 15179-65
ACCESSION NR: AP4048269

constant coefficients. Formulas are obtained for determining the coefficients of these equations directly from the input operator impedance (admittance) of a circuit having constant parameters and the driving-point components of the current and voltage of the idealized switch. The conditions under which a periodic mode is set up in the circuit are also examined. Orig. art. has: 35 formulas.

ASSOCIATION: None

SUBMITTED: 09Mar63 ENCL: 00

SUB CODE: EC, MA NR REF SOV: 007 OTHER: 003

Card 2/2

APPROVED FOR RELEASE: 07/13/2001 CIA-RDP86-00513R001445620002-7"

"APPROVED FOR RELEASE: 07/13/2001 CIA-RDP86-00513R001445620002-7

ROZENFEL'D, A.Z.

Materials on the ethnography and toponymy of Vanch. Izv.Vses.geog.ob-va 85 no.4:393-404 Jl-Ag '53. (MLRA 6:8)
(Vanch Valley--Ethnology) (Ethnology--Vanch Valley)

APPROVED FOR RELEASE: 07/13/2001 CIA-RDP86-00513R001445620002-7"

"APPROVED FOR RELEASE: 07/13/2001 CIA-RDP86-00513R001445620002-7

ROZENFEL'D, A. Z.

Gor'kiy, Maksim, 1868-1936

Gor'kiy and contemporary Persian literature. Vest. Len. un 6 No. 8, 1951.

9. Monthly List of Russian Accessions, Library of Congress, September 1952~~1953~~, Uncl.

APPROVED FOR RELEASE: 07/13/2001 CIA-RDP86-00513R001445620002-7"

"APPROVED FOR RELEASE: 07/13/2001 CIA-RDP86-00513R001445620002-7

ACCESSION NR: AP4011791 P/0045/63/024/006/0729/0734

AUTHOR: Wesolowski, J.; Rozenfeld, B.; Szuszkiewicz, M.

TITLE: Influence of absorbed hydrogen on the angular distribution of photons from two-quantum annihilation in titanium

SOURCE: Acta physica polonica, v. 24, no. 6, 1963, 729-734

TOPIC TAGS: absorbed hydrogen, angular distribution of photons, two-quantum annihilation, exothermic hydrogen-metal system, hydrogenated titanium, gamma, Fermi momentum distribution, free electron, positive ionization

ABSTRACT: There is still considerable disagreement on the nature of the bonds and the state of hydrogen atoms in exothermic hydrogen-metal systems. Comparison of free electron density in pure and hydrogenated metal may throw light on the structure of these systems and the degree of positive hydrogen ionization. The paper describes measurements of the angular distribution of gammas from two-quantum annihilation in pure and hydrogenated titanium, and the experimental apparatus used. The curve corresponding to the H-Ti system seems to be broader than the one obtained for pure titanium. The experimental curves were compared

APPROVED FOR RELEASE: 07/13/2001 CIA-RDP86-00513R001445620002-7"

"APPROVED FOR RELEASE: 07/13/2001 CIA-RDP86-00513R001445620002-7

ACCESSION NR: AP4011791

with theoretical Fermi momentum distributions calculated for 2, 3, 4, 5 and 6 free electrons per titanium atom, with the conclusion that the number of free electrons per one titanium atom is not less than 3 in pure titanium and about 6 in the investigated H-Ti system. The results suggest that the positive ionization of the absorbed hydrogen is almost complete.

"We would like to express our gratitude to Dr. B. Stalinski, who kindly charged our samples to the high hydrogen concentration."

Orig. has 2 diagrams, 3 graphs and 4 equations.

ASSOCIATION: Katedra Fizyki Deswiadczalnej Uniwersytetu B. Bieruta, Wroclaw (Chair of Experimental Physics, B. Bierut University)

SUBMITTED: 30May63 DATE ACQ: 04Feb64 ENCL: 00

SUB CODE: NP NO REF SOV: 000 OTHER: 010

Card 2/2

APPROVED FOR RELEASE: 07/13/2001 CIA-RDP86-00513R001445620002-7"

"APPROVED FOR RELEASE: 07/13/2001 CIA-RDP86-00513R001445620002-7

SEMAKOV, P.; POGUDIN, N.; LOSHCHININ, D.; ROGACHEV, F.; CHATSKIY, P.; MAKAROVICH, A.; BEKETOV, I.; ROZENFEL'D, B. BIBIK, N.

This is for our beloved country. Sov.protreb.koop. 5 no.8:6-7 Ag '61. (MIRA 14:7)
(Cooperative societies) (Socialist competition)

APPROVED FOR RELEASE: 07/13/2001 CIA-RDP86-00513R001445620002-7"

"APPROVED FOR RELEASE: 07/13/2001 CIA-RDP86-00513R001445620002-7

WESOLOWSKI, J.; ROZENFELD, B.; SZUSZKIEWICZ, M.

Influence of absorbed hydrogen on the angular distribution of photons from two-quantum annihilation in titanium. Acta physica Pol 24 no.6:729-734 D '63.

1. Institute of Experimental Physics, Boleslaw Bierut University, Wroclaw.

APPROVED FOR RELEASE: 07/13/2001 CIA-RDP86-00513R001445620002-7"

"APPROVED FOR RELEASE: 07/13/2001 CIA-RDP86-00513R001445620002-7

ROZENFEL'D, B. A.

Vnutrennyaya Geometriya Mnozhestva T-Mernykh Ploskostey P-Mernogo Ellipticheskogo Prostranstva. Ian, ser. Mathem., 5 (1941), 353-368.

Differentsial'naya Geometriya Semeystv Mnogomernykh Ploskostey. Ian, ser. Matem., 11 (1947), 283-308.

SO: Mathematics in the USSR, 1917- 1947
edited by Kurosh, A. G.,
Markushevich, A. I.,
Rashevskiy, P.K.
Moscow - Leningrad, 1948.

APPROVED FOR RELEASE: 07/13/2001 CIA-RDP86-00513R001445620002-7"

"APPROVED FOR RELEASE: 07/13/2001 CIA-RDP86-00513R001445620002-7

Rozenfeld, B. A. Dr. Physicomath Sci.

Dissertation: "Theory of the Families of Subspaces."
Moscowm Order of Lenin State U imeni M. V. Lomonosov USSR 10 Dec 47

So: Vechernyaya Moskva Dec. 1947 (Proj. #17836)

APPROVED FOR RELEASE: 07/13/2001 CIA-RDP86-00513R001445620002-7"

"APPROVED FOR RELEASE: 07/13/2001 CIA-RDP86-00513R001445620002-7

ROZENFEL'D, B. A.

Rozenfel'd, B. A. The metric and affine connection in spaces of planes, spheres or quadrics. Doklady Akad. Nauk SSSR (N.S.) 57, 543-546 (1947). (Russian)

Many geometrical figures, among them points, planes, spheres, quadrics in various spaces, may be viewed from a common point of view as "figures of symmetry." The following are the spaces considered: a projective n-space P_n, Euclidean n-space R_n, an l-pseudo-Euclidean ${}^lR_n$ (with an indefinite metric of index l), an elliptic n-space S_n, an l-pseudo-elliptic space ${}^lS_n$, a conformal n-space C_n, a complex unitary-elliptic space K_n and a double unitary elliptic space B_n (B_n differs from K_n in that complex numbers are replaced by Clifford numbers ($\alpha=a+\omega b$, $\omega^2=\pm 1$). The fundamental groups of these spaces are denoted by corresponding German letters $\mathfrak{P}_n$ (projective collineations), $\mathfrak{M}_n$ (Euclidean motions), etc. In these spaces the figures considered are m-pairs in P_n (a configuration of an m-plane and an $(n-m-1)$-plane; m-planes in R_n, ${}^lR_n$, S_n, ${}^lS_n$, K_n and B_n; m-spheres in C_n and hyperquadrics in P_n. The complete manifolds of these figures are denoted by P_n^m, R_n^m, etc. and the last one by Q_n^{n-1}. Symmetries with respect to m-planes in R_n, ${}^lR_n$, S_n, ${}^lS_n$ are classical: they are reflections. The general principle is given by theorem 1: the numerical and geometric invariants of two figures of symmetry are invariants of that transformation of the fundamental group which is the product of the symmetries with respect to these figures; they are the invariant figures of this transformation and the characteristic roots of the matrix of this transformation. The main theorem of the paper proves that in a space of figures of symmetry it is possible to introduce an affine connection (without torsion) which is invariant under the fundamental group. If the group is semisimple a Riemannian or a pseudo-Riemannian metric may be introduced (Riemannian if the group is compact; all these groups, except those of R_n and ${}^lR_n$, are semisimple; those of C_n and K_n are compact). The final result of the paper is that the geodesics (or paths) in these spaces correspond to one-parameter subgroups of the fundamental group.

M. S. Knebelman (Pullman, Wash.).

Source: Mathematical Reviews, 1948, Vol 9, No. 5

APPROVED FOR RELEASE: 07/13/2001 CIA-RDP86-00513R001445620002-7"

"APPROVED FOR RELEASE: 07/13/2001 CIA-RDP86-00513R001445620002-7

ROZENFEL'D, B. A.

3

Mathematical Reviews
Vol. 14 No. 8
Sept. 1953
Geometry.

7-13-54
LL

Rozenfel'd, B. A. Spinor representations of real rotations. Trudy Sem. Vektor. Tenzor. Analizu 6, 506–514 (1948). (Russian)

R. Brauer and H. Weyl [Amer. J. Math. 57, 425–449 (1935)] found all spinor representations for the groups of complex euclidean notions for any number of dimensions. The present paper shows how to settle the analogous problem for real groups of motions in euclidean and pseudo-euclidean (euclidean with different signature) spaces. The real orthogonal group is O^n, the corresponding group for signature $n-2l$ is O_l^n. The corresponding twice covering groups are the spinor group S^n and S_l^n. Introduced is a Clifford algebra C^n of 2^{n-1} basic elements built up of $e_1, e_2, \cdots, e_{n-1}$ such that $e_i^2=-e$, $e_ie_j=-e_je_i$. For C_l^n the corresponding formulas are $e_i^2=-\sigma(i-l)e$, $e_ie_j=-e_je_i$, where $\sigma(n)=-1$ for $n\leqq 0$, and $+1$ for $n>0$. An element a of C_l^n is given by

$$a=a_0e+a_ie_i+a_{ij}e_{ij}+\cdots+a_{i_1\cdots i_k}e_{i_1\cdots i_k}+\cdots+a_{12\cdots n-1}e_{12\cdots n-1},$$

where the $i_1, \cdots, i_k$ run from 1 to $n-1$, and

$$e_{i_1i_2\cdots i_k}=e_{i_1}e_{i_2}\cdots e_{i_k}.$$

(OVER)

APPROVED FOR RELEASE: 07/13/2001 CIA-RDP86-00513R001445620002-7"

"APPROVED FOR RELEASE: 07/13/2001 CIA-RDP86-00513R001445620002-7

One of the results is expressed in the following theorem. The algebra C_l^n for $n=2m+1$ is isomorphic to the algebra $R^{2^{m-1}}[i, j, k]$ of 2^{m-1}-dimensional quaternionic matrices, or the algebra R^{2^m} of 2^m-dimensional real matrices. For $n=2m$ it is isomorphic to the algebra $R^{2^{m-1}}[i]$ of 2^{m-1}-dimensional complex matrices, the algebra $2R^2$ of 2^{m-1}-dimensional dual matrices, or the algebra $2R^{2^{m-1}}[i, j, k]$ of 2^{m-2}-dimensional dual quaternionic matrices.

Dual numbers are $a+b\omega$, $\omega^2=+1$; i is the ordinary complex unit. For instance, $C^2=C_0^2$ is isomorphic to the $R[i, j, k]$ of quaternions, C_1^2 to the R^2 of two-dimensional real matrices

$$1=\begin{pmatrix}1 & 0\\ 0 & 1\end{pmatrix},\quad i=\begin{pmatrix}1 & 0\\ 0 & -1\end{pmatrix},\quad j=\begin{pmatrix}0 & 1\\ -1 & 0\end{pmatrix},\quad k=\begin{pmatrix}0 & 1\\ 1 & 0\end{pmatrix}.$$

Moreover, for $n=4m+1$ and l even:

$$C_l^{n+1}=C_l^n[i],\quad C_{l+1}^{n+1}=C_l^n[\omega]=2C_l^n$$

and for l odd:

$$C_l^{n+1}=C_l^n[\omega]=2C_l^n,\quad C_{l+1}^{n+1}=C_l^n[i].$$

For $n=4m-1$ the formulas for l even and odd are reversed. For instance, $C^4=2C^2$, the straight sum of two quaternion fields or the algebra of dual quaternions; it is the system of elliptic biquaternions. C_1^4 is that of hyperbolic biquaternions. These results are related to those of D. Wajnsztejn [Ann. Soc. Polon. Math. 16, 65–83, 162–175 (1938); Studia Math. 9, 109–120 (1940); these Rev. 3, 103].

In the remaining part of the paper it is shown how to apply these results to establish a homoform correspondence of the groups O_l^n and S_l^n, and certain examples are given. It is concluded that all groups S_l^n are isomorphic to a subgroup of algebras of matrices with real complex, dual or dual complex elements. *D. J. Struik.*

APPROVED FOR RELEASE: 07/13/2001 CIA-RDP86-00513R001445620002-7"

"APPROVED FOR RELEASE: 07/13/2001 CIA-RDP86-00513R001445620002-7

Rozenfel'd, B. A. The metric method in projective differential geometry and its conformal and contact analogues.
Mat. Sbornik N.S. 22(64), 457–492 (1948). (Russian)

The basic idea of the paper consists of establishing a correspondence between certain configurations in a given space and points of an appropriate metric space. The metric invariants of this space will then correspond to certain invariants of the original space if the basic groups of the two are simply isomorphic. These ideas were successfully exploited by numerous geometers, particularly by Tzitzéica and Bompiani for the projective group and by Lie for the contact group. As a classic example the author gives the correspondence between lines in P_3 (projective space of three dimensions) with points on a hyperquadric Q_4 in P_5, the equation of Q_4 being $p^{01}p^{23}+p^{02}p^{13}+p^{03}p^{12}=0$ (condition of simplicity), p^{ij} being the Grassmann coordinates of the line. In this case the projective group of P_3 is simply isomorphic with the projective group of P_5 leaving Q_4 invariant.

The author gives numerous examples of this metric method, such as the geometry of pairs of lines in P_3, certain linear congruences in P_3, as well as applications to conformal differential geometry, the conformal group of C_3 being simply isomorphic with the projective group of P_4 leaving a Q_3 invariant. The last section of the paper deals with points, planes and spheres (oriented) of a C_3 under contact transformations. To each "sphere" of C_3 corresponds a point of P_5 (using hexaspherical coordinates), the contact group of C_3 being simply isomorphic to the projective group of P_5 leaving a Q_4 invariant. This group may be looked upon as the group of motions in P_5, Q_4 being the absolute, the metric of P_5 in this case being doubly pseudoelliptic.

M. S. Knebelman (Pullman, Wash.).

Source: Mathematical Reviews, Vol 10, No. 1

APPROVED FOR RELEASE: 07/13/2001 CIA-RDP86-00513R001445620002-7"

"APPROVED FOR RELEASE: 07/13/2001 CIA-RDP86-00513R001445620002-7

Source: Mathematical Reviews, Vol 10 No. 6

Rozenfel'd, B. A. Conformal differential geometry of families of C_m in C_n. Mat. Sbornik N.S. 23(65), 297–313 (1948). (Russian)

The paper presents a broad application of metric methods to the study of conformal differential geometry of m-spheres and m-planes in metric n-spaces. By C_n is understood an n-space with Euclidean metric or a spherical n-space in a Euclidean $(n+1)$-space, a C_n with an elliptic metric. A conformal m-sphere is either an m-sphere or an m-plane in C_n. The fundamental group of C_n is the group of conformal transformations (the Möbius group) preserving contact and angle between hyperspheres. The author uses "$(n+2)$-spherical" coordinates chosen so that for a hypersphere $s\cdot s=(s^0)^2+(s^1)^2+\cdots+(s^n)^2-(s^{-1})^2=1$. Then the absolute has the equation $s\cdot s=0$. Thus a hyperbolic metric may be introduced in S_{n+1} so that the distance ω between two points is given by $\cos\omega=s\cdot t$. By observing that the group of hyperbolic motions in S_{n+1} is simply isomorphic to the conformal group of transformations in C_n and that the totality of hyperspheres of C_n passing through a given m-sphere is represented in S_{n+1} by an elliptic $(n-m-1)$-plane, it follows that the conformal differential geometry of m-spheres in C_n is the same as the metric differential geometry of $(n-m-1)$-planes in a hyperbolic space S_{n+1}. Another observation enables the author to obtain conformal invariants for this geometry: the group of conformal transformations is a noncompact simple Lie group; it therefore has a Cartan metric in terms of which the space of m-spheres C_n becomes a symmetric pseudo-Riemannian space. Thus one can study m-spirals, i.e., families of m-spheres corresponding to geodesics, and also congruences of m-spheres.

M. S. Knebelman (Pullman, Wash.).

APPROVED FOR RELEASE: 07/13/2001 CIA-RDP86-00513R001445620002-7"

"APPROVED FOR RELEASE: 07/13/2001 CIA-RDP86-00513R001445620002-7

ROZENFEL'D, B.A.

2

Rozenfel'd, B. A. Differential geometry of figures of symmetry. Doklady Akad. Nauk SSSR (N.S.) 59, 1057–1060 (1948). (Russian)

In an earlier paper [same Doklady (N.S.) 57, 543–546 (1947); these Rev. 9, 249] the author has introduced figures of symmetry and considered spaces whose elements are such figures. The present note is devoted to differential geometry in such spaces. The basic concept here is that of a line element given by two infinitesimally close figures of symmetry; the invariants (or parameters) of such a line element are obtained from those of pairs of figures discussed in the cited note by a passage to the limit. Using the affine connection and the metric also introduced in that note it is possible to characterize a line element by a local vector which the author defines in terms of the Lie algebra of the basic group; he finds formulas connecting the components of the local vector with parameters and what he calls geometrical parameters of the line element.

The author states that in studying k-parameter families of figures of symmetry he has obtained formulas which express local parameters in terms of a direction in the family and which are generalizations of the formulas of Hamilton and Mannheim for congruences of lines in R_3 and are analogous to those of Coolidge for S_3 and $^1S_3$. In order to obtain further generalizations of congruences certain figures of symmetry are designated as basic and "congruence" is defined as a family such that only one element of it is incident to such a basic figure. The local structure of a congruence is characterized by certain affinors, and under certain conditions the family in the large is determined by them (up to a transformation of the group). These affinors are special cases of those introduced by V. Wagner [Rec. Math. [Mat. Sbornik] N.S. 10(52), 165–212 (1942); these Rev. 7, 33] and contain in turn several special cases considered by Dubnov and Coolidge. Special types of congruences may be characterized by imposing conditions on these affinors. *G. Y. Rainich* (Ann Arbor, Mich.).

Source: Mathematical Reviews, Vol. 10, No. 1

APPROVED FOR RELEASE: 07/13/2001 CIA-RDP86-00513R001445620002-7"

"APPROVED FOR RELEASE: 07/13/2001 CIA-RDP86-00513R001445620002-7

ROZENFEI'D, B.A.

Rozenfel'd, B. A. On unitary and stratified spaces. Trudy Sem. Vektor. Tenzor. Analizu 7, 260-275 (1949). (Russian)

A unitary space K_n of Schouten is a complex metric space with coordinates $X^i = \xi^{i-1} + i\xi^{i}$ with a real metric determined by a Hermitian tensor $A_{\bar{i}i} = \bar{A}_{i\bar{i}}$ and affine connection whose components with mixed indices are all zero and $\Gamma^k_{ij} = A^{\bar{m}k}\partial A_{\bar{m}j}/\partial X^i$; $\Gamma^{\bar{k}}_{\bar{i}\bar{j}} = A^{\bar{k}l}\partial A_{\bar{i}\bar{j}}/\partial X^{\bar{l}}$; $\Gamma^k_{ij} = \Gamma^{\bar{k}}_{\bar{i}\bar{j}}$. A stratifiable space of Rashevski is a pseudo-Riemannian space V_{2n} containing 2 families of n-dimensional spaces X_n satisfying the conditions: (1) Through each point of V_{2n} there passes one and only one X_n of each family; (2) the X_n are isotropic; and (3) each X_n is a space of absolute parallelism. This implies that each X_n is totally geodesic in V_{2n}. The present paper is concerned with the question of when is V_{2n} a K_n and conversely. The distinction is made between

Source: Mathematical Reviews, Vol 12 No. 5

APPROVED FOR RELEASE: 07/13/2001 CIA-RDP86-00513R001445620002-7"

"APPROVED FOR RELEASE: 07/13/2001 CIA-RDP86-00513R001445620002-7

Poincaré models; conformal and equilong mappings; Möbius and Laguerre transformations of the hyperbolic plane.

H. Busemann (Los Angeles, Calif.).

Source: Mathematical Reviews, Vol 12 No1 5 1

APPROVED FOR RELEASE: 07/13/2001 CIA-RDP86-00513R001445620002-7"

"APPROVED FOR RELEASE: 07/13/2001 CIA-RDP86-00513R001445620002-7

ROZENFEL'D, B. A.

Rozenfel'd, B. A. The symbolic method and vector diagrams for nonsinusoidal currents. Trudy Sem. Vektor. Tenzor. Analizu 7, 381–387 (1949). (Russian)

Let a linear network be driven by a nonsinusoidal voltage $v(t)$. The current flowing into the circuit is found with the aid of a vector diagram which is actually just a set of ordinary vector diagrams (the kind used in elementary alternating current theory), one for each Fourier component of $v(t)$. *E. N. Gilbert* (Murray Hill, N. J.).

ource: Mathematical Reviews, Vol 12, No. 2

APPROVED FOR RELEASE: 07/13/2001 CIA-RDP86-00513R001445620002-7"

"APPROVED FOR RELEASE: 07/13/2001 CIA-RDP86-00513R001445620002-7

ROZENFELD, B. A.

Rozenfel'd, B. A. Unitary-differential geometry of families of K_n in K_n. Mat. Sbornik N.S. 24(66), 53–74 (1949). (Russian)

By a unitary-elliptic n-space K_n is understood a complex space of n dimensions in which there is a real metric, the distance between the points x^i, y^i $(i=0, 1, \cdots, n)$ being given by $\cos^2 \omega/r = x^\lambda \bar{y}^\lambda \cdot y^\mu \bar{x}^\mu / x^\lambda \bar{x}^\lambda \cdot y^\mu \bar{y}^\mu$, x^i being homogeneous coordinates and r a constant, real or pure imaginary (in this paper $r=1$). The space K_n may also be considered as a real Riemann space of $2n$ dimensions; in the first case its curvature as determined by any 2-dimensional orientation is $1/r^2$, but in the second its curvature is variable. A unitary-elliptic K_1 is isometric with a 2-sphere in E_3 of radius $r/2$; thus real 2-dimensional orientations have curvatures $1/r^2$ and $4/r^2$. A sequence of points in K_n is called a thread and if every quadruple of points on a thread has a real anharmonic ratio, the thread is called a 1-chain or just a chain. Chains lie on unitary-elliptic lines K_1; geodesic threads are special cases of chains. They are represented by those circles which cut orthogonally the absolute of K_n given by $x^\lambda \bar{x}^\lambda = 0$ and are called normal chains.

The group of motions of K_n consists of two components; the unitary component of all proper unitary-elliptic motions and one of improper motions. The proper motions of K_n are given by unitary unimodular $(n+1)$-rowed matrices so that if a_j^i is such a matrix so is $e^{2k\pi i/(n+1)} \cdot a_j^i$ $(k=0, 1, \cdots, n)$. Thus the group of proper motions of K_n is simply isomorphic to the factor group of unitary unimodular matrices by its discrete normal divisor consisting of the matrices $e^{2k\pi i/(n+1)} \delta_j^i$. Improper motions consist of products of proper motions and mappings of a point by its complex conjugate. In the correspondence of K_1's to 2-spheres in E_3, proper motions correspond to proper rotations of the sphere, while improper ones contain a reflection through the center.

The author defines an m-plane and its polar $(n-m-1)$-plane and the geometry of these planes is studied by means of the group of reflections in an m-plane. An n-chain is defined as an n-parameter K_n in which any two points determine a 1-chain; they are analogues of totally geodesic varieties. Reflections in n-chains are also studied. Another topic studied in detail is that of congruences and pseudo-congruences of m-planes and n-chains. By using the fact that the group of motions of K_n is a compact simple Lie group, one introduces the Cartan metric in the group manifold and by means of it the author obtains the various components of affine curvature. The paper is concluded by a construction of a real model of a unitary-elliptic space K_n in which an m-plane is represented by a real S_m in an S_4, together with an extensive list of their corresponding properties.

M. S. Knebelman (Pullman, Wash.)

Source: Mathematical Reviews, Vol. 11 No. 1

APPROVED FOR RELEASE: 07/13/2001 CIA-RDP86-00513R001445620002-7"

"APPROVED FOR RELEASE: 07/13/2001 CIA-RDP86-00513R001445620002-7

Rozenfel'd, B. A. The projective differential geometry of ~~the family of pairs~~ P_m+P_{n-m-1} in P_n. Mat. Sbornik N.S. 24(66), 405–428 (1949). (Russian)

This is a development of a considerable amount of work done by the author and others on the application of the metric method to projective, conformal and other geometries. If P_n is an n-dimensional projective space with homogeneous coordinates x^i $(i=0, 1, \cdots, n)$ and a non-degenerate hyperquadric $a_{\lambda\mu}x^\lambda x^\mu=0$ is given, the distance ω between two points is taken to be

$$\cos^2\omega=(a_{\lambda\mu}x^\lambda y^\mu\cdot a_{\lambda\mu}y^\lambda x^\mu)/(a_{\lambda\mu}x^\lambda x^\mu\cdot a_{\lambda\mu}y^\lambda y^\mu)$$

(the radius of the space is taken to be 1; otherwise one would write ω/r for ω). If the above quadric is positive definite the space is elliptic, S_n; if its index is l it is called l-pseudoelliptic, ${}^lS_n$. If u_λ and v_λ are the tangential-coordinates of the polar hyperplanes of x and y $(u_\lambda=a_{\lambda\mu}x^\mu;$ $v_\lambda=a_{\lambda\mu}y^\mu)$, the distance is given by

$$(*)\qquad \cos^2\omega=(u_\lambda y^\lambda\cdot v_\mu x^\mu)/(u_\lambda x^\lambda\cdot v_\mu y^\mu),$$

which is a metric invariant of either the two points or the two hyperplanes. It is also a projective invariant of the points and planes as it is the cross-ratio of the four points x, y and the pair of points in which the line xy cuts the two polar hyperplanes. Thus from the projective point of view, the basic element is a point and its polar hyperplane; such an element is called a "0-pair" and (*) is then a projectively invariant distance between two "0-pairs."

Analogously to the complex generalization of S_n one can construct a double unitary elliptic space B_n by using a Clifford algebra: $\alpha=a+eb$, $e^2=1$, $\bar\alpha=a-eb$, or by changing the basis $(e_1=(1+e)/2, e_2=(1-e)/2, e_1^2=e_1; e_2^2=e_2; e_1e_2=0)$. In this space the distance between two points is

$$\cos^2\omega=(\xi^\lambda\eta^\lambda\cdot\eta^\lambda\xi^\lambda)/(\xi^\lambda\xi^\lambda\cdot\eta^\lambda\eta^\lambda).$$

Source: Mathematical Reviews, 1950 Vol 11 No. 2

APPROVED FOR RELEASE: 07/13/2001 CIA-RDP86-00513R001445620002-7"

"APPROVED FOR RELEASE: 07/13/2001 CIA-RDP86-00513R001445620002-7

Rozenfel'd, B.A.

uniformly with respect to the parameter λ, where $E(N, \lambda)$ is the set of x such that $x \in A$, $|f_\lambda(x)| > N$.

A number of theorems are proved, of which the following are typical. (1) If a family $\{\Phi_\lambda\}$ of completely additive set-functions on $\mathfrak{M}$ admits a basis, then it admits a regular basis. (2) If $\mathfrak{M}$ is essentially divisible with respect to a basis M for $\{\Phi_\lambda\}$, then it is essentially divisible with respect to any regular basis for $\{\Phi_\lambda\}$. (3) If M is any basis of the family of set-functions $\{\Phi_\lambda\}$ defined on $\mathfrak{M}$ such that $\mathfrak{M}$ is not essentially divisible with respect to M, then there exists a dissection of A (unique up to null-sets), $A = B \cup B'$, such that B is a countable union of pairwise disjoint sets each indivisible with respect to M, and such that every set of $\mathfrak{M}$ contained in B' is essentially divisible with respect to M. [Reviewer's note: this can be proved without assuming that M is a basis.] Also, this division is unique, up to null-sets, for all bases M. (4) If a family of set-functions $\{\Phi_\lambda\}$ on $\mathfrak{M}$ are uniformly additive, and admit a basis with respect to which $\mathfrak{M}$ is essentially divisible, then the functions Φ_λ are uniformly bounded on $\mathfrak{M}$. (5) If $\{\Phi_\lambda\}$ are a family of uniformly bounded and uniformly additive set-functions on $\mathfrak{M}$, and if M is any basis for $\{\Phi_\lambda\}$, then there exists a family of point-functions $\{f_\lambda(x)\}$ such that $\Phi_\lambda(E) = \int_E f_\lambda(x)\,dM(x)$ for all $E \in \mathfrak{M}$, and such that the functions $f_\lambda(x)$ are equi-summable with respect to M, $\mathfrak{M}$, and λ. A converse to (5) is also proved. (6) Let $\{\Phi_n\}_{n=1}^{\infty}$ be a sequence of finite-valued completely additive set-functions on $\mathfrak{M}$. If $\lim_{n\to\infty} \Phi_n(E)$ exists for every $E \in \mathfrak{M}$, then the set-functions are uniformly bounded on $\mathfrak{M}$. The paper closes with some remarks on abstract integral equations. *E. Hewitt* (Seattle, Wash.).

Source: Mathematical Reviews, 1950 Vol 11 No. 2

APPROVED FOR RELEASE: 07/13/2001 CIA-RDP86-00513R001445620002-7"

"APPROVED FOR RELEASE: 07/13/2001 CIA-RDP86-00513R001445620002-7

Rozenfel'd, B. A.

Rozenfel'd, B. A., and Artamov, A. A. Spaces with affine connection and symmetric spaces. Uspehi Matem. Nauk (N.S.) 5, no. 2(36), 142-147 (1950). (Russian)

A semi-expository account of the theory of affinely connected spaces and spaces of symmetry. It is "a systematic presentation of the theory of these spaces designed for mathematicians of other specialization, such an account being absent in the Russian as well as in foreign literatures." This rather extensive paper may be divided into three main parts. The first deals with various geometric spaces, viz.: the real linear vector space L_n and its conjugate space L_n^*; the equilinear space E_n, a linear vector space in which an exterior form for any n vectors is defined: $[x, y, \cdots, z] = e_{i_1 \cdots i_n} x^{i_1} \cdots z^{i_n}$, where e is a skew-symmetric tensor; B_n, a linear space with bilinear metric defining a scalar product $(x, y) = a_{ij} x^i y^j$; orthogonal space O_n which is a B_n with positive definite fundamental tensor a_{ij}; a pseudo-orthogonal space ${}^lO_n$ whose metric is $\sum_i \delta_i (x^i)^2$ with $\delta_i = -1$ for $i \leq l$ and $+1$ for $i > l$ (the group of automorphisms of this space is the pseudo-orthogonal group ${}^l\mathfrak{O}_n$ of the same index); the simplectic space Y_{2n} whose fundamental metric tensor is skew-symmetric and with simplectic group $\mathfrak{Y}_{2n}$, where $\sum_i (a_k{}^i a_l{}^{i+n} - a_k{}^{i+n} a_l{}^i) = \delta_{k,l-n} - \delta_{k-n,l}$. The most general space considered is the affine space with the group $\mathfrak{A}_n$, where ${}'x^i = a_j{}^i x^j + a^i$. The subgroup of $\mathfrak{A}_n$, ${}'x^i = x^i + a^i$, is the group of parallel displacements and the lines $x^i = a^i t + b^i$ are the straight lines, t being the affine parameter determined up to a transformation ${}'t = at + b$. Three points on a line determine an invariant of $\mathfrak{A}_n$ called the ratio, i.e., $(t_1 - t_2)/(t_2 - t_3)$. If this ratio is 1 the points x_1, x_3 are symmetric with respect to x_2. Symmetries with respect to a fixed point define an involutory mapping given by ${}'x = 2a - x$, the product of two symmetries being a parallel displacement (${}''x = x + 2(b - a)$). These concepts are then extended to differential geometric spaces by means of mappings of tangent spaces at nearby points. This leads to the development of tensor calculus and differential invariants for metric, affine, or equiaffine geometry. The second part is devoted to the theory of Lie groups and Lie algebras; their local and topological properties, isomorphisms, and representations are briefly, but clearly presented. The geometry is based primarily on the work of É. Cartan, the main theorem being that in any Lie group a unique affine connection without torsion is determined which is invariant under the group operations $x \to ax$, $x \to xa$; $x \to x^{-1}$. The particular groups presented in the first part are studied in detail and their affine structure is obtained from the corresponding group algebras. A space of symmetry is now defined as an affine space without torsion, with each point of which is associated an involutory transformation, defined over the whole space, which leaves the affine connection invariant and generates a symmetry in the tangent space at the point. (For geodesic neighborhoods this is equivalent to the definition given in the first part.)

Source: Mathematical Reviews, 1/2 Vol 12, No. 3.

BAR + AAA

APPROVED FOR RELEASE: 07/13/2001 CIA-RDP86-00513R001445620002-7"

"APPROVED FOR RELEASE: 07/13/2001 CIA-RDP86-00513R001445620002-7

ROZENFEL'D, B.A.

The main theorem in this connection, also due to Cartan, is that a necessary and sufficient condition for a space to be one of symmetry is that $\nabla_i R_{jkl}{}^h = 0$. Other theorems discussed in some detail are that Lie groups regarded as affine spaces without torsion are spaces of symmetry and that a necessary and sufficient condition for a symmetry space to be a Lie group is that the fundamental group of the space contain a simply transitive subgroup. The last part is devoted to symmetry spaces whose fundamental group is simple. Their classification naturally depends on that of simple groups and these are discussed in considerable detail, except for the 5 isolated simple groups. The last section is devoted to realization or "models" of spaces of symmetry; this is really a brief resumé of the authors' work over the past half dozen years. *M. S. Knebelman.*

Source: Mathematical Reviews, 7/-2, Vol 12, No. 3

BAR +AAA

APPROVED FOR RELEASE: 07/13/2001 CIA-RDP86-00513R001445620002-7"

"APPROVED FOR RELEASE: 07/13/2001 CIA-RDP86-00513R001445620002-7

Rozenfel'd, B. A.

Source: Mathematical Reviews, Vol 12 No. 9.

Rozenfel'd, B. A. Projective geometry as metric geometry. Trudy Sem. Vektor. Tenzor. Analizu. 8, 328–354 (1950). (Russian)

The fundamental idea of this work lies in the fact that the principle of duality of projective geometry is applicable to the space of m-pairs [Mat. Sbornik N.S. 24(66), 405–428 (1949); these Rev. 11, 133]. Thus a projective space P_n becomes a space of $2n$ dimensions whose elements are 0-pairs, i.e., points and their dual hyperplanes, the advantage being in the fact that such a space is metric, two 0-pairs determining a range of 4 points or dually a pencil of 4 hyperplanes. However, the author does not pursue this synthetic point of view but develops the subject analytically. This is based on the fact that the fundamental group of P_n, $\mathfrak{P}$, is a noncompact simple Lie group. To each such group corresponds a compact simple Lie group in which the elements are complex. This is the $\mathfrak{K}_n$ of motions in an n-dimensional complex unitary-elliptic space K_n in which there is a real metric defined by a Hermitian form. If the points of this space are given by homogeneous coordinates ξ^i $(i=0, 1, \cdots, n)$, then the distance between two points is given by (*) $\cos^2 \omega/k = \xi^i\bar{\eta}^i \cdot \bar{\xi}^i\eta^i/\xi^i\bar{\xi}^i \cdot \eta^i\bar{\eta}^i$, where k is the "radius" of the space and is either real or pure imaginary. From the algebra of $\mathfrak{K}_n$ one obtains the Clifford algebra $(1, e, e^2=1)$ and the corresponding group $\mathfrak{B}_n$. If the basis is changed to $e_1=\frac{1}{2}(1+e)$, $e_2=\frac{1}{2}(1-e)$, then $e_1^2=e_1$, $e_2^2=e_2$, $e_1e_2=0$; the group $\mathfrak{B}_n$ is then also the group of motions of an n-dimensional unitary-elliptic space B_n but based on Clifford numbers $(\alpha=ae_1+be_2;\ \bar{\alpha}=be_1+ae_2)$. If in B_n $\xi^i=x^ie_1+u_ie_2$ then the metric (*) (with $k=1$) becomes $\cos^2 \omega = u_iy^i \cdot v_ix^i/u_ix^i \cdot v_iy^i$, which is a projective invariant since it is the cross ratio of two points and two hyperplanes. From this the line element of K_n or B_n is obtained by considering $\cos^2 d\omega$ in the form $(d\omega)^2 = 2\{\xi^i\bar{\xi}^i d\xi^j d\bar{\xi}^j - \xi^i d\bar{\xi}^i \cdot \bar{\xi}^j d\xi^j\}/(\xi^i\bar{\xi}^i)^2$ which was previously obtained by Schouten and van Danzig. By writing the metric in the form $(d\omega)^2 = a_{\alpha\beta} - d\sigma^\alpha d\bar{\sigma}^{\bar{\beta}}$ where $a_{\alpha\bar{\beta}}$ is a Hermitian symmetric tensor one shows that $a_{\alpha\bar{\beta}} = \partial_\alpha\partial_{\bar{\beta}} \ln (\xi^i\bar{\xi}^i)$. Thus the space P_n is stratified and the tensor analysis and geometry of such spaces has been previously developed by P. K. Raševskiĭ and the author [the author, Mat. Sbornik N.S. 24(66) 53–74 (1949); these Rev. 11, 55].

M. S. Knebelman (Pullman, Wash.).

Smw

APPROVED FOR RELEASE: 07/13/2001 CIA-RDP86-00513R001445620002-7"

"APPROVED FOR RELEASE: 07/13/2001 CIA-RDP86-00513R001445620002-7

Rozenfel'd, B.A.

Rozenfel'd, B. A., and Yaglom, I. M. On the geometries of the simplest algebras. Mat. Sbornik N.S. 28(70), 205–216 (1951). (Russian)

The two-dimensional Euclidean, spherical, and hyperbolic distances may be written in a well-known manner in terms of complex numbers. This idea can be carried over to any algebra A over the field R of the real numbers with the following properties: There exists an involution $\alpha \to \bar{\alpha}$ of A on itself such that $\overline{\alpha+\beta}=\bar{\alpha}+\bar{\beta}$, $\overline{\alpha\beta}=\bar{\beta}\bar{\alpha}$, $\bar{\bar{\alpha}}=\alpha$. The algebra has a unit. If $\bar{\alpha}=\alpha$, then α is a real number times the unit; $\alpha\bar{\alpha}$ is a nondegenerate quadratic form. Examples are $R(i, j)$, consisting of quaternions, with base $1, i, j, k$, where $k=ij$, $i^2=-1$, $j^2=-1$, and $ij=-ji$; the dual numbers $R(e)$ with base 1 and e, where $e^2=1$; and $R(i, e)$ with base $1, i, e$, and f, where $f=ie$, $i^2=-1$, $e^2=1$, and $ie=-ei$. It is shown that geometries can be defined in terms of these algebras which are similar to the above mentioned forms of the Euclidean, spherical, and hyperbolic geometries. The geodesics are discussed. The procedure can be generalized to higher dimensions and leads to some new geometries as well as known ones mostly encountered in the theory of Lie groups. The geodesics and completely geodesic manifolds of these geometries are discussed. It is shown how special cases of these geometries lead to well-known spaces like the symplectic space. *H. Busemann* (Los Angeles, Calif.)

Source: Mathematical Reviews, Vol. [illegible] No. [illegible]

APPROVED FOR RELEASE: 07/13/2001 CIA-RDP86-00513R001445620002-7"

"APPROVED FOR RELEASE: 07/13/2001 CIA-RDP86-00513R001445620002-7

Mathematical Reviews
Vol. 15 No. 2
Feb. 1954
Geometry

8

Rozenfel'd, B. A. Non-Euclidean geometries over the complex and the hypercomplex numbers and their application to real geometries. Sto dvadcat' pyat' let neevklidovoĭ geometrii Lobačevskogo, 1826–1951. [One hundred and twenty-five years of the non-Euclidean geometry of Lobačevskiĭ, 1826–1951], pp. 151–166. Gosudarstv. Izdat. Tekh.-Teor. Lit., Moscow-Leningrad, 1952. 7.60 rubles.

Instead of assigning real values to the coordinates $x^0, x^1, \cdots, x^n$ of a point of a projective space P_n, we can take them as complex, dual, quaternionic or pseudoquaternionic numbers: 1) $a+bi$; 2) $a+be$; 3) $a+bi+cj+dk$; 4) $a+bi+ce+df$, where $i^2=j^2=-1$, $ij=-ji=k$, $e^2=i$, $ie=-ei=f$; the units of the dual numbers can also be taken as $e_+=\frac{1}{2}(1-e)$, $e_-=\frac{1}{2}(1-e)$, $e_+^2=e_+$, $e_-^2=e_-$, $e_+e_-=0$. Such spaces are accordingly denoted by $P_n(i)$, $P_n(e)$, $P_n(i, j)$, and $P_n(i, e)$. We can consider affine spaces A_n and unitary non-euclidean spaces K_n in a similar manner. A number of correspondences can now be established. For instance, the point of $P_n(e)$ given by $x^k=X^ke_++Y^ke_-$ represents a pair of points X^k and Y^k of a real P_n; if we pass to kX^k and lY^k the x^k are multiplied by (ke_++le_-). Moreover, lines, planes and hyperplanes of $P_n(e)$ represent pairs of such figures in P_n. The points of a $P_n(i, e)$ represent lines of a real P_{2n+1}. Since quaternions and pseudoquaternions do not satisfy the commutative law, the theorem of Pappus does not hold in $P_n(i, j)$ and $P_n(i, e)$. The metric of $K_n(i)$ and $K_n(i, j)$, considered as real spaces of twice and four times their

APPROVED FOR RELEASE: 07/13/2001 CIA-RDP86-00513R001445620002-7"

"APPROVED FOR RELEASE: 07/13/2001 CIA-RDP86-00513R001445620002-7

Rozenfeld, B.A.

number of dimensions, is Riemannian. They belong to the symmetrical spaces of E. Cartan; $K_n(i)$ is a special A-space of P. A. Širokov [see A. P. Širokov, this same book, pp. 195–200; these Rev. 15, 62] and $K_n(e)$ a special stratifiable space of P. K. Raševskiĭ [Trudy Sem. Vektor. Tenzor. Analizu 6, 225–248 (1948); these Rev. 15, 62]. The $K_n(i)$ were first studied by Fubini and Study. They are isometric with a paratactic line congruence in a real Riemannian S_{2n+1} (with proper definition of metric). The $K_n(e)$, $K_n(i, j)$, $K_n(i, e)$ are also isometric with such a congruence, now in $a^{n+1}S_{2n+1}$ (pseudo-Riemannian with signature n, $n+1$), a $K_{2n+1}(i)$ and $K_{2n+1}(e)$ respectively. The $K_n(e)$ can also be made isometric with the manifold of the configurations (point-hyperplane) in P_n (with proper definition of metric). For the $K_n(i, e)$ this leads to a symplectic space Sp_{2n+1}, which is the space of projective transformations in P_{2n+1} which leaves a skew-symmetric form

$$X^0Y^{n+1}-X^{n+1}Y^0+\cdots+X^0Y^{2n+1}-X^{2n+1}Y^0$$

invariant.

D. J. Struik (Cambridge, Mass.).

8-16-54 LL

APPROVED FOR RELEASE: 07/13/2001 CIA-RDP86-00513R001445620002-7"

"APPROVED FOR RELEASE: 07/13/2001 CIA-RDP86-00513R001445620002-7

ROZENFEL'D, B. A.

USSR/Mathematics - Collineations, Matrices Jan/Feb 52

"Classification of Collineations," B. A. Rozenfel'd, Azerbaydzhan State U imeni S. M. Kirov

"Uspekh Matemat Nauk" Vol VII, No 1 (47), pp 195-198

Gives the complete classification of collineations with indication of several collineation types which were omitted in the std projective geometry textbooks of S. S. Byushgens "(Analytical Geometry,)" Moscow/Leningrad, 1946) and N. A. Glagolev "(Projective Geometry,)" Moscow/Leningrad, 1936). Also completes the characteristic of the elements that remain invariant for all types of collineations.

204T31

APPROVED FOR RELEASE: 07/13/2001 CIA-RDP86-00513R001445620002-7"

"APPROVED FOR RELEASE: 07/13/2001 CIA-RDP86-00513R001445620002-7

ROZENFEL'D, B. A.

Mathematical Reviews
Vol. 14 No. 8
Sept. 1953
Geometry.

Rozenfel'd, B. A. The geometry of a manifold of planes of a projective space as a projective geometry of points. Trudy Sem. Vektor. Tenzor. Analizu 9, 213–222 (1952). (Russian)

Taking real matrices of dimension m as coordinates, the author constructs a projective space P_m^n of dimension n. The space P_m^{n+1} can be mapped into the space $P_{m(m+1)/2}^{n}$ and their collineation groups are isomorphic. Following Hua [C. R. (Doklady) Acad. Sci. URSS (N.S.) 53, 303–306 (1946); these Rev. 8, 328] he also discusses a geometry of symplectic matrices. *Marshall Hall* (Columbus, Ohio.).

APPROVED FOR RELEASE: 07/13/2001 CIA-RDP86-00513R001445620002-7"

"APPROVED FOR RELEASE: 07/13/2001 CIA-RDP86-00513R001445620002-7

USSR/Mathematics - Transformations, Cremona 21 Apr 52

"Quadratic Cremona Transformations on a Plane and Complex Numbers," B. A. Rozenfel'd, Z. A. Skopets

"Dok Ak Nauk SSSR" Vol LXXXIII, No 6, pp 801-804

One of the simplest quadratic Cremona transformations on the Euclidean plane is the circular transformation represented by the fractional-linear (bilinear) transformation of the complex-variable plane. Current article demonstrates that all Cremona transformations in a projective plane

223T67

can be obtained with the aid of bilinear transformations of various kinds of complex numbers. Submitted by Acad I. G. Petrovskiy 21 Feb 52.

223T67

ROZENFEL'D, B. A.

APPROVED FOR RELEASE: 07/13/2001 CIA-RDP86-00513R001445620002-7"

"APPROVED FOR RELEASE: 07/13/2001 CIA-RDP86-00513R001445620002-7

ROZENFEL'D, B.A.

ROZENFEL'D, B.A.

Geometry of Spherical Manifolds Tr. Azerb. un-ta. ser. fiz. - matem., No 3, 1953, pp 93-109

The author examines manifolds of spheres (hyperspheres) of an n-dimensional Euclidean space R_n and an n-dimensional spherical space S_n. Manifolds of oriented spheres of finite radius in R_n and S_n can be uniquely mapped onto a hypersphere of unit radius in an $(n+2)$ - dimensional pseudo-Euclidean space. The author shows that this type of mapping is of fundamental importance in the interpretation of non-Euclidean geometry with the aid of spheres. (RZhMat, No 4, 1955)

SO: Sum. No. 568, 6 Jul 55

APPROVED FOR RELEASE: 07/13/2001 CIA-RDP86-00513R001445620002-7"

"APPROVED FOR RELEASE: 07/13/2001 CIA-RDP86-00513R001445620002-7

ROZENFELD, B. A

1

Rozenfeld, B. A. On the mathematical works of Muhammad Nasireddin. Izv. Akad. Nauk Azerbaĭdžan. SSR 1953 no. 4 35–50 (Azerbaijani)

Azerbaijani version of an earlier Russian paper. Istor. Mat. Issled. 4 1951, 489–512. MR 14, 524

APPROVED FOR RELEASE: 07/13/2001 CIA-RDP86-00513R001445620002-7"