"APPROVED FOR RELEASE: 08/22/2000 CIA-RDP86-00513R001445820004-3

Rubinovich, M.S.

MOSHKEVICH, S.M.; RUBINOVICH, M.S.

Correlation between tonsillitis and tuberculosis in children and adolescents. Probl.tub. no.3:34-40 My-Je '55. (MLRA 8:8)

1. Iz kafedry oto-laringologii (zav.-prof. L.L.Frumin) i kafedry tuberkuleza (zav.-prof. B.L.Yakhnis) Ukrainskogo instituta usovershenstvovaniya vrachey (dir.-dotsent I.I.Ovsiyenko).

(TONSILITIS,
relation to tuberc. in child.)
(TUBERCULOSIS,
relation to tonsillitis in child.)

APPROVED FOR RELEASE: 08/22/2000 CIA-RDP86-00513R001445820004-3"

"APPROVED FOR RELEASE: 08/22/2000 CIA-RDP86-00513R001445820004-3

ASTAF'YEV, N.V.; RUBINOVICH, R.S.; YAKOVLEVA, S.A.

Spectral determination of nickel, chromium, and copper in clays. Izv.AN SSSR.Ser.fiz.19 no.2:192-193 Mr-Ap '55. (MLRA 9:1)

1.Nauchno-issledovatel'skiy institut geologii Arktiki.
(Tartu--Spectrum analysis--Congresses)

APPROVED FOR RELEASE: 08/22/2000 CIA-RDP86-00513R001445820004-3"

"APPROVED FOR RELEASE: 08/22/2000 CIA-RDP86-00513R001445820004-3

24(7) SOV/48-23-9-53/57

AUTHORS: Rubinovich, R. S., Pershin, A. S.

TITLE: On Pneumatic Methods of Introducing Pulverized Samples Into an Arc-discharge

PERIODICAL: Izvestiya Akademii nauk SSSR. Seriya fizicheskaya, 1959, Vol 23, Nr 9, pp 1163 - 1165 (USSR)

ABSTRACT: In the introduction, the drawbacks of introducing powder samples into the discharge space by means of an air flow are enumerated as follows: 1 ) Incomplete evaporation of the powder particles. 2) The dependence of the entering-velocity of the powder particles on their chemical-physical properties and other factors. The authors endeavored to attain complete evaporation of the particles by pneumatically feeding the powder. Figure 1 shows a photograph of this arrangement. Air pressure of 10 to 100 torr conveys the pulverized sample into the discharge chamber, with a flask filled with powder in a quantity of 0.05 - 0.2 g mounted on a vibrator, from which the powder is blown out. By means of this arrangement a uniform jet of powder with a diameter of 2 mm is obtained, which

Card 1/3

APPROVED FOR RELEASE: 08/22/2000 CIA-RDP86-00513R001445820004-3"

"APPROVED FOR RELEASE: 08/22/2000 CIA-RDP86-00513R001445820004-3



impinges exactly onto the center of the light arc. If pressure is too high, the light arc becomes unstable. Further, the proper working conditions must be chosen for each individual substance (power of the light arc, pressure, etc). The line intensities were found to depend on air pressure. At a pressure of 5 to 10 torr, and only if a quantity of powder of 1 to 2 g enters the discharge space within 2o to 3o seconds, a spectrum with normal intensities is obtained. Figure 3 shows the sharp increase of line intensities with pressure. As found by A. K. Rusanov (Refs 1,2,5) an accuracy which is by far higher than in the case of the evaporation of a test substance from an electrode channel, is obtained if 3o mg per minute are blown into the discharge space. If more than 30 mg per minute are supplied, evaporation of the powder particles in the light arc is insufficient. Finally, some further disadvantages of the method described are mentioned, thus the dependence of the feeding rate of powder on the degree of pulverization, and on hygroscopical and other physico-chemical properties. The difference in the size of the powder particles is described



APPROVED FOR RELEASE: 08/22/2000 CIA-RDP86-00513R001445820004-3"

"APPROVED FOR RELEASE: 08/22/2000 CIA-RDP86-00513R001445820004-3

On Pneumatic Methods of Introducing Pulverized Samples Into an Arc-discharge SOV/48-23-9-53/57

as a great disadvantage, and for uniform powder the accuracy of the described method is given as amounting to 3 to 5%. The authors thank M. M. Kler, in whose laboratory in the chemistry department of Leningrad University this work was carried out. There are 3 figures and 5 Soviet references.

ASSOCIATION: Nauchno-issledovatel'skiy institut geologii Arktiki (Scientific Research Institute for the Geology of the Arctic Region)

Card 3/3

APPROVED FOR RELEASE: 08/22/2000 CIA-RDP86-00513R001445820004-3"

"APPROVED FOR RELEASE: 08/22/2000 CIA-RDP86-00513R001445820004-3

RUBINOVICH, R.S.; ZOLOTAREVA, N.Ya.

Quantitative spectrum determination of nickel, cobalt, and copper in ore and minerals. Inform. sbor. NIIGA no.30: 52-62 '62. (MIRA 17:1)

APPROVED FOR RELEASE: 08/22/2000 CIA-RDP86-00513R001445820004-3"

"APPROVED FOR RELEASE: 08/22/2000 CIA-RDP86-00513R001445820004-3

RUBINOVICH, R.S.; BRONTEYN, K.Ya.; SUSHAL'SKAYA, O.N.

Spectrochemical determination of platinum, palladium, and gold in rocks. Zhur. anal. khim. 18 no.2:216-221 F '63. (MIRA 17:10)

1. Scientific-Research Institute of Geology of the Arctic.

APPROVED FOR RELEASE: 08/22/2000 CIA-RDP86-00513R001445820004-3"

"APPROVED FOR RELEASE: 08/22/2000 CIA-RDP86-00513R001445820004-3

RUBINOVICH, R.S.; LOPATINA, L.M.

Using the method of X-ray spectral fluorescence for determining iron in rocks and ores. Uch. zap. NIIGA. Reg. geol. no.2:125-139 '64. (MIRA 19:1)

APPROVED FOR RELEASE: 08/22/2000 CIA-RDP86-00513R001445820004-3"

"APPROVED FOR RELEASE: 08/22/2000 CIA-RDP86-00513R001445820004-3

RUBINOVICH, R.S.

Quantitative spectrum analysis of niobium in carbonatite samples during the insertion of powder in to the arc discharge by the pneumatic method. Inform.biul.NIIGA no.16:61-68 '59.
(MIRA 15:3)

(Niobium--Spectra)

APPROVED FOR RELEASE: 08/22/2000 CIA-RDP86-00513R001445820004-3"

"APPROVED FOR RELEASE: 08/22/2000 CIA-RDP86-00513R001445820004-3

S/058/60/000/012/011/011
A001/A001

Translation from: Referativnyy zhurnal, Fizika, 1960, No. 12, p. 339, # 34300

AUTHOR: Rubinovich, R.S.

TITLE: The Quantitative Spectral Determination of Niobium in Carbonatites by Introducing Powders Into Arc Discharge by Pneumatic Method

PERIODICAL: Inform. byul. In-ta geol. Arktiki, 1959 No. 16, pp. 61-68

TEXT: The author describes a method of pneumatic introducing powder samples into an a.c. arc for determining Nb in carbonatite specimens at concentrations exceeding 0.1 %. The spectra were photographed with an ИСП -28 (ISP-28) spectrograph. Ta and Mo served as comparison elements. A comparison of experimental results of investigating 23 carbonatite specimens by the method mentioned with those obtained by chemical analysis showed their good agreement. The mean arithmetical error amounts to 7 %.

Translator's note: This is the full translation of the original Russian abstract.

Card 1/1

APPROVED FOR RELEASE: 08/22/2000 CIA-RDP86-00513R001445820004-3"

"APPROVED FOR RELEASE: 08/22/2000 CIA-RDP86-00513R001445820004-3

RUBINOVICH, V.I.

Clinics of calcium cyanide intoxication. Vrach. delo no.6:115-118 Je '61. (MIRA 15:1)

1. Klinika nervnykh bolezney (zaveduyushchiy - prof. P.A. Miniovich) (Stalinskogo meditsinskogo instituta.
(CALCIUM CYANAMIDE--TOXICOLOGY)

APPROVED FOR RELEASE: 08/22/2000 CIA-RDP86-00513R001445820004-3"

"APPROVED FOR RELEASE: 08/22/2000 CIA-RDP86-00513R001445820004-3

16.9400

77476
SOV/103-21-1-7/22

AUTHOR: Rubinovich, Ya. I. (Moscow)

TITLE: Synthesis of a Control System With Monotonously Diminishing Gain Applying Root-Locus Method

PERIODICAL: Avtomatika i telemekhanika, 1960, Vol 21, Nr 1, pp 48-55 (USSR)

ABSTRACT: In the study a control system containing an element with monotonously diminishing gain is explained. The system is designed for a periodically repeating operation. Definition of problem. Regulation process takes place during time T. At each T period this process repeats with the same or with another driven element. Ingeneral a system in an open state consists of two blocks: the first block has a transfer function in the following form:

$$G(s) = \frac{\prod_{i=1}^{m} (s + z_i)}{\prod_{i=1}^{n} (s + p_i)}, \qquad (1)$$

Card 1/8

APPROVED FOR RELEASE: 08/22/2000 CIA-RDP86-00513R001445820004-3"

"APPROVED FOR RELEASE: 08/22/2000 CIA-RDP86-00513R001445820004-3



where $n \geqslant m$, and $p_i$ are placed on the left side of the s-plane. The second block represents a circuit with a monotonously diminishing gain and is described by the expression:

$$K_1(t) = \frac{K_0}{(t+a)^r}. \qquad (2)$$

The magnitude of r ($1 \leqslant r \leqslant 4$) depends on the method of remote control. Block II is substituted by a block II*, the gain of which changes as follows:

$$K_1^*(t) = Ae^{-\frac{t}{\tau}}. \qquad (3)$$

Coefficients A and $\tau$ are chosen in such a manner that the equations $K_1(0) = K_1^*(0)$ and $K_1(T) = K_1^*(T)$ are satisfied. Thus



APPROVED FOR RELEASE: 08/22/2000 CIA-RDP86-00513R001445820004-3"

"APPROVED FOR RELEASE: 08/22/2000 CIA-RDP86-00513R001445820004-3



$$A = \frac{K_0}{a^2}, \qquad \tau = \frac{T}{\ln\left(1 + \frac{T}{a}\right)^r}$$

and

$$K_1^*(t) = \frac{K_0}{a^r} \exp\left[-\frac{t}{T} r \ln\left(1 + \frac{T}{a}\right)\right]. \qquad (4)$$

From theory of exponential function it results that:

$$K_1^*(t) > K_1(T) \quad \text{at} \quad 0 < t < T.$$

The system consisting of blocks I and and II* is a quasi-majoring system with reference to the system containing block II. Since function G(s) does not have its poles on the right-hand side of the s-half plane, the closed loop system (Fig. 2) containing the block II* will be quasi-majoring with respect to the closed loop system



APPROVED FOR RELEASE: 08/22/2000 CIA-RDP86-00513R001445820004-3"

"APPROVED FOR RELEASE: 08/22/2000 CIA-RDP86-00513R001445820004-3



containing block II. In order to analyze the transient

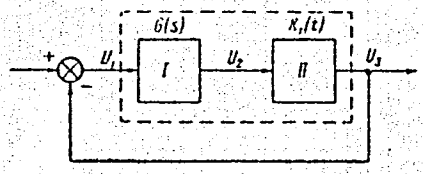


Fig. 2.

state characteristics of the initial system, the quasi-majoring system has been used. The method of synthesis is as follows: The transfer function of block I is given in the form:

$$G(s) = \frac{(s + z_1)}{s^2 (s + p_1)(s + p_2)^2 (s + p_3)(s^2 + 2\zeta\,\omega_n s + \omega_n^2)}, \qquad (6)$$

where

$$z_1 = 4,\ p_1 = 6{,}7,\ p_2 = 8,\ p_3 = 20,\ \zeta = 0{,}101,\ \omega_n = 12{,}65\ \frac{1}{\text{сек}}.$$

Card 4/8

APPROVED FOR RELEASE: 08/22/2000 CIA-RDP86-00513R001445820004-3"

"APPROVED FOR RELEASE: 08/22/2000 CIA-RDP86-00513R001445820004-3



and the gain of block II changes as follows:

$$K_1(t) = \frac{K_0}{1+at}, \qquad (7)$$

where $K_0 = 2 \cdot 10^2$ and $a = 0.2$ sec. Time of operation $T = 10$ sec. The parameters of the series correcting circuit must be so chosen that after connecting the feedback circuit the relative damping coefficient of the system will not be less than 0.2 for an arbitrary pair of complex poles. Analysis of the Movement of Roots of the Closed Loop System. Figure 3 shows the zero and pole distribution on the plane of the complex parameters $s = \sigma + j\varepsilon$. The arrows indicate the directions of the move of the roots when the gain of the system $K_{syst}$ increases. The trajectory of the move and the stability conditions of the quasi-majoring system are given on this figure. The Choice of Correcting Circuit. The choice of correcting circuit is made using the well known method of the root-locus analysis. After introducing an additional zero at the



APPROVED FOR RELEASE: 08/22/2000 CIA-RDP86-00513R001445820004-3"

"APPROVED FOR RELEASE: 08/22/2000 CIA-RDP86-00513R001445820004-3

Synthesis of a Control System With Monotonously Diminishing Gain Applying Root-Locus Method

77476
SOV/103-21-1-7/22

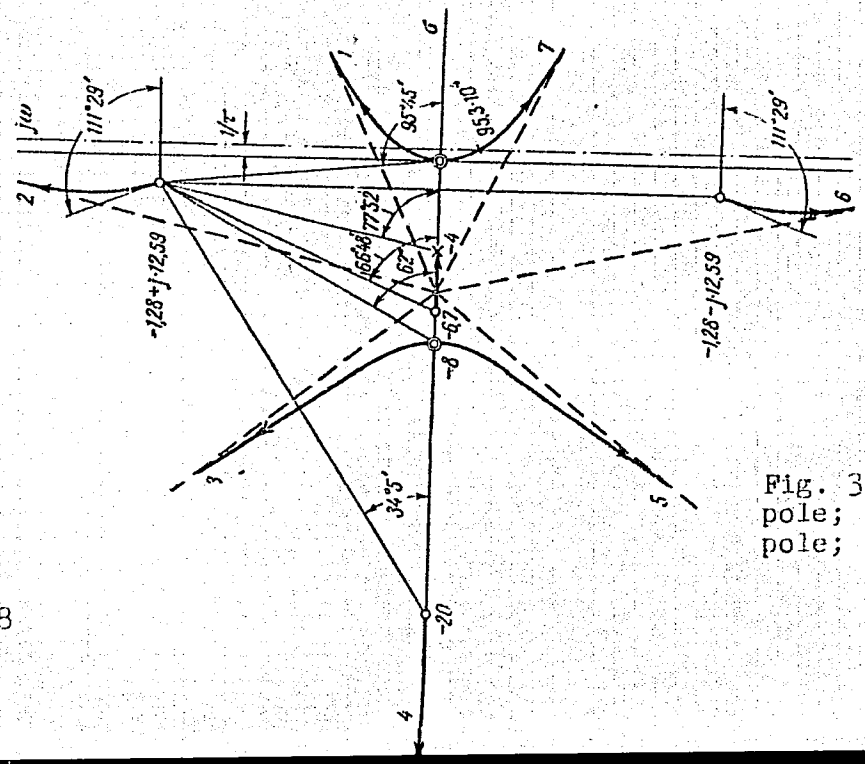


Fig. 3. (○) Single pole; (◎) double pole; (x) single zero.

Card 6/8

APPROVED FOR RELEASE: 08/22/2000 CIA-RDP86-00513R001445820004-3"

"APPROVED FOR RELEASE: 08/22/2000 CIA-RDP86-00513R001445820004-3



point $s = -z_1^* = -2$ and a correcting circuit with the transfer function:

$$G_2(s) = \frac{(s+z_1^*)}{(s+p_1^*)}\frac{p_1}{z_1^*}.$$

good stability conditions are obtained. However, this does not satisfy the condition imposed on the damping coefficient. Introducing the correcting circuit with the transfer function:

$$G_2(s) = \frac{(s+2)(s^2+2\xi\omega_n s+\omega_n^2)\,15p_2^*p_3^*}{(s+30)(s+p_2^*)(s+p_3^*)\,\omega_n^2}.$$

which has the zeros placed at two pole ($-1.28 \pm j \cdot 2.59$, Fig. 3) of the quasi-majoring system, the proper value of the damping coefficient is obtained. The block diagram of the correcting circuit for this condition is shown on Fig. 7. Synthesis of this circuit may be made for a given value of $G_2(s)$ using the method of B. J. Dasher (see Ref 4 of this abstract). There are 7 figures; and 7



APPROVED FOR RELEASE: 08/22/2000 CIA-RDP86-00513R001445820004-3"

"APPROVED FOR RELEASE: 08/22/2000 CIA-RDP86-00513R001445820004-3

Synthesis of a Control System With Monotonously Diminishing Gain Applying Root-Locus Method

77476
SOV/103-21-1-7/22

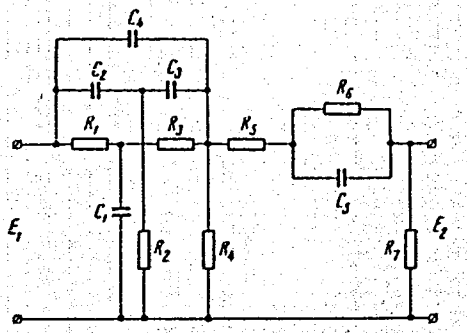


Fig. 7. $R_1$ = 11,600 ohm; $R_2$ = 1,100 ohm; $R_3$ = 23,000 ohm; $R_4$ = 11,300 ohm; $R_5$ = 22,500 ohm; $R_6$ = 832,000 ohm; $R_7$ = 17,700 ohm; $C_1$ = 2.5 $\mu$f; $C_2$ = 22 $\mu$f; $C_3$ = 1.1 $\mu$f; $C_4$ = 0.0725 $\mu$f; $C_5$ = 0.6 $\mu$f.

references, 3 Soviet, 4 U.S. The U.S. references are: John G. Truxal, Automatic Feedback Control System Synthesis, McGraw-Hill, 1955; Yeh, C. M., Synthesis of Feedback Control Systems by Gain-Contour and Root-Contour Methods, Trans. of AIEE, p. II, 1956; Evans, W. R., Control System Dynamics, McGraw-Hill, 1954; Dasher, B. J., Synthesis of RC Transfer Functions as Unbalanced Two Terminalpair Networks, Trans. of IRE, Professional Group on Circuit Theory, 1952.

Card 8/8

SUBMITTED: May 11, 1959

APPROVED FOR RELEASE: 08/22/2000 CIA-RDP86-00513R001445820004-3"

"APPROVED FOR RELEASE: 08/22/2000 CIA-RDP86-00513R001445820004-3

RUBINOVICH, YA. I.

Tables of trigonometrical values and their logorithms for angles in the divisions of the compass. Moskva, Gos. izd-vo oboron. pro-myshl., 1954. 99 p. (55-44413)

QA55.T18

APPROVED FOR RELEASE: 08/22/2000 CIA-RDP86-00513R001445820004-3"

"APPROVED FOR RELEASE: 08/22/2000 CIA-RDP86-00513R001445820004-3

RUBINOVICH, YA. V.

USSR/ Engineering
Boilers
Electric Power Plants Dec 48

"Automatic Oxygen Recorder," L. A. Gudkevich, Ya. V. Rubinovich, Engineers, 1½ pp

"Elek Stants" No 12

Describes two experimental models for measuring oxygen content in high-pressure thermal-power plant boilers. Used standard parts wherever possible. Performance considered equivalent to type imported from a Cambridge firm. Device includes the following instruments: transmitting element, condenser, voltage source (selenium rectifier), and self-recording galvanometer. Operates on principle of thermal changes in platinum wire (0.02 mm diameter) inserted in a measuring chamber whose conductivity depends on oxygen content.

PA 54/49T43

APPROVED FOR RELEASE: 08/22/2000 CIA-RDP86-00513R001445820004-3"

"APPROVED FOR RELEASE: 08/22/2000 CIA-RDP86-00513R001445820004-3

SLOBODYANIK, I. [Slobodianyk, I.], kand.tekhn.nauk; RUBINOVICH, Ye. [Rubinovych, IE.], inzh.; LISINA, P. [Lysina, P.], inzh.; DOROFEYEVA, K. [Dorofieieva, K.], inzh.

Locally mined lime for mortars. Sil'.bud. 11 no.11:14-15 N '61. (MIRA 15:3)

(Ukraine--Lime)

APPROVED FOR RELEASE: 08/22/2000 CIA-RDP86-00513R001445820004-3"

"APPROVED FOR RELEASE: 08/22/2000 CIA-RDP86-00513R001445820004-3

CA

An automatic oxygen meter. L. A. Gudkevich and Ya. V. Rubinovich. *Elek. Stantsii* 19, No. 12, 44-5(1948). N. Thon

APPROVED FOR RELEASE: 08/22/2000 CIA-RDP86-00513R001445820004-3"

"APPROVED FOR RELEASE: 08/22/2000 CIA-RDP86-00513R001445820004-3

SLOBODYANIK, G. [Slobodianyk, H.], doktor tekhn.nauk, prof.; RUBINOWICH, Ye. [Rudynovych, E.], inzh.; LISINA, N. [Lysyna, N.], inzh.; DOROFEYEVA, K. [Dorofieieva, K.], inzh.

Replacing the lime in cement building mortars with local additives. Bud. mat. i konstr. 4 no.1:44-45 Ja-F '62. (MIRA 15:7)
(Mortar)

APPROVED FOR RELEASE: 08/22/2000 CIA-RDP86-00513R001445820004-3"

"APPROVED FOR RELEASE: 08/22/2000 CIA-RDP86-00513R001445820004-3

L 9349-66 EWT(d)/EWT(1) IJP(c) GG

ACC NR: AP5011481 PO/0045/65/027/003/0435/0455

44,55

47

B

AUTHOR: Rubinowicz, A. (Warsaw)

TITLE: Application of various electromagnetic formulations of Huygens' principle to the solution of jump magnitude problems

SOURCE: Acta physica polonica, v. 27, no. 3, 1965, 435-455

21,44,55 16,44,55

TOPIC TAGS: Maxwell equation, electromagnetism, Lorentz transformation, boundary value problem

ABSTRACT: The applicability of transformations derived from Lorentz's electromagnetic formulation of Huygens principle to the solution of jump magnitude problems at prescribed values of tangential components is investigated. It is shown that transformations I and II, based on the Lorentz-Larmor principle, as well as Kottler's transformation can be used to solve jump magnitude problems upon a surface F even at arbitrarily prescribed discontinuous values of tangential components in certain curves upon surface F. The boundary values can be calculated directly from the tangential components with the aid of Maxwell's equations not requiring a prior solution of the jump magnitude problems. The given and calculated boundary values give the same solution of the jump magnitude problem as that obtained by application of Lorentz's electromagnetic formulation of Huygens' principle. This paper contains also a review of Kottler's electromagnetic formulation of Huygens' principle. Orig. art. has: 34 formulas.

Card 1/2

2

APPROVED FOR RELEASE: 08/22/2000 CIA-RDP86-00513R001445820004-3"

"APPROVED FOR RELEASE: 08/22/2000 CIA-RDP86-00513R001445820004-3

L 9349-66

ACC NR: AP5011481

0

ASSOCIATION: none

SUBMITTED: 01Jul64 ENCL: 00 SUB CODE: 12, 09

NO REF SOV: 000 OTHER: 017

Card 2/2 rds

APPROVED FOR RELEASE: 08/22/2000 CIA-RDP86-00513R001445820004-3"

"APPROVED FOR RELEASE: 08/22/2000 CIA-RDP86-00513R001445820004-3

1ST AND 2ND ORDERS

3RD AND 4TH ORDERS

PROCESSES AND PROPERTIES INDEX

SA

A53
l

**2258. Kirchhoff's Diffraction Problem for Electron Waves.** A. Rubinowicz. *Acta Physica Polonica*, 3. *pp.* 143–163, 1934. *In German.*

For the purpose of arriving at a complete theory of the Stern-Gerlach effect the diffraction phenomena of Dirac's electron waves are investigated from the point of view of Kirchhoff's theory of diffraction, in the first instance for cases where no external fields are present. The calculations are carried out analogously to those in the corresponding problem in optics and the results are compared and discussed. H. L. B.

ASM-SLA METALLURGICAL LITERATURE CLASSIFICATION

APPROVED FOR RELEASE: 08/22/2000 CIA-RDP86-00513R001445820004-3"

"APPROVED FOR RELEASE: 08/22/2000 CIA-RDP86-00513R001445820004-3

1ST AND 2ND ORDER

PROCESSES AND PROPERTIES INDEX

3

**Does iron occur in the solar corona?** A. Rubinowicz *Nature* 141, 81 (1938). The line λ 4815.9, which occurs in Sekiguti's photographs of the solar corona, is possibly identical with the "forbidden" Fe II line λ 4814.78, which is due to the transition $3d^6\,(^3F)\,4s\,^4F_{9/2} \rightarrow 3d^7\,^4F_{9/2}$. The absence of Fe lines usually stronger than this one makes this identification tentative, not final. F. J. M. Stratton. *Ibid.* Stronger coronal lines vary greatly in intensity from one eclipse to another; weak lines might be irregularly present or absent. The line mentioned has been observed only once. Verification of the observation is necessary before the identification is complete. G. M. P.

ASM-SLA METALLURGICAL LITERATURE CLASSIFICATION

APPROVED FOR RELEASE: 08/22/2000 CIA-RDP86-00513R001445820004-3"

"APPROVED FOR RELEASE: 08/22/2000 CIA-RDP86-00513R001445820004-3

1ST AND 2ND ORDERS

3RD AND 4TH ORDERS

PROCESSES AND PROPERTIES INDEX

SA

A 53

2982. The limits of the applicability of Sommerfeld's polynomial method in quantum theory. A. Rusnowicz. *C.R. Soc. Sci. Lett. Varsovie, Cl. III. Sci. Math. Phys.*, 37-63 (1947).

ASM-SLA METALLURGICAL LITERATURE CLASSIFICATION

APPROVED FOR RELEASE: 08/22/2000 CIA-RDP86-00513R001445820004-3"

"APPROVED FOR RELEASE: 08/22/2000 CIA-RDP86-00513R001445820004-3

1ST AND 2ND ORDERS

3RD AND 4TH ORDERS

PROCESSES AND PROPERTIES INDEX

SA

A 53
2

530.145.6

2922. Solution of the system of integral equations in Dirac's one-electron problem in momentum representation. A. Rubinowicz. *C.R. Soc. Sci. Lett. Varsovie, Cl. III, Sci. Math. Phys.*, 8 pp. (1949).

COMMON ELEMENTS

COMMON VARIABLES INDEX

MATERIALS INDEX

ASM-SLA METALLURGICAL LITERATURE CLASSIFICATION

AUTHOR INDEX

1ST AND 2ND LETTER

2ND LETTER

3RD AND 4TH ORDERS

APPROVED FOR RELEASE: 08/22/2000 CIA-RDP86-00513R001445820004-3"

"APPROVED FOR RELEASE: 08/22/2000 CIA-RDP86-00513R001445820004-3

RUBINOWICZ, A.

Rubinowicz, A. Propagation of a cut-off train of de Broglie waves. Acta Phys. Polonica 10, 79-86 (1950).

The author considers the one-dimensional propagation of the de Broglie waves of frequency $\nu_0$ which at time $t=0$ are confined to the negative $x$ axis, i.e.,

$$\psi=\exp\left[-2\pi i\nu_0(t-x/u_0)\right]$$

if $x<0$ and $\psi=0$ if $x>0$. Here $u_0$ is the phase velocity corresponding to the frequency $\nu_0$. The subsequent motion is given by the integral

$$\psi(x,t)=\frac{1}{2\pi i}\int e^{w}\frac{d\nu}{\nu-\nu_0},\quad w=2\pi i\nu(t-x/u),$$

taken about the appropriate contour. He then shows that the wave appears at the point $x$ ($>0$) at a time $t=x/c$ ($c$=light velocity), that this is followed by a "precursor"

APPROVED FOR RELEASE: 08/22/2000 CIA-RDP86-00513R001445820004-3"

"APPROVED FOR RELEASE: 08/22/2000 CIA-RDP86-00513R001445820004-3

wave. The main body of the wave appears at [illegible]

$t = x/v_0$, where $v_0 u_0 = c^2$. H. Feshbach.

RUBINOWICZ, A.

"Fields Defined by Elementary Laws." p. 155, (ACTA PHYSICA POLONICA, Vol. 11, no. 2, 1951, Warszawa, Poland)

SO: Monthly List of East European Accessions, LC, Vol. 3, No. 5, May 1954/Uncl.

APPROVED FOR RELEASE: 08/22/2000 CIA-RDP86-00513R001445820004-3"

"APPROVED FOR RELEASE: 08/22/2000 CIA-RDP86-00513R001445820004-3

RUBINOWICZ, A.

Mathematical Reviews
Vol. 14 No. 8
Sept. 1953
Analysis

Rubinowicz, A. Fields defined by elementary laws. Acta Phys. Polonica 11, 155–178 (1952).

If a given scalar field $u$ is isotropic and homogeneous, it is possible to define it by an elementary law in the form of a spherically symmetric field due to a simple source, $u=f(r)$, say. Its partial fields are then given by $f(r)$ and the partial derivatives of $f(r)$ with respect to the Cartesian coordinates $x$, $y$, $z$. The field of a partial derivative of order $k$ may be interpreted as the field of a multiple source of order $2^k$, an idea which goes back to Maxwell and Sylvester.

By superimposing such fields, it is possible to obtain multiple fields $Y_{l,m}(\theta,\phi)R_l^k(r)$ of order $2^l$ (where $k$ is an odd integer and $Y_{l,m}(\theta,\phi)$ is a spherical surface harmonic) which have in general a singularity at the origin. To obtain fields of the form $Y_{l,m}(\theta,\phi)S_l^k(r)$ which are finite at the origin, the field of a simple source is expanded by a bilinear formula involving both functions $R$ and $S$, just as the generating function for the Legendre polynomials

$$\frac{1}{(r_1^2-2r_1r_2\mu+r_2^2)^{1/2}}=\sum_0^\infty P_n(\mu)\frac{r_2^n}{r_1^{n+1}}$$

involves the two harmonic functions $r^nP_n(\mu)$ regular at 0 and $r^{-n-1}P_n(\mu)$ with a singularity at 0.

The formulae expressing the multiple fields $Y_{l,m}(\theta,\phi)R_l^k(r)$ in terms of the fields of multiple sources can be used to write down all the multiple solutions of an equation $\sum_{s=0}^m a_s\Delta^s u=0$ (especially the potential equation $\Delta u=0$ and the wave equation $\Delta u+k^2u=0$), and also in certain cases the solutions regular at the origin. *E. T. Copson* (St. Andrews).

APPROVED FOR RELEASE: 08/22/2000 CIA-RDP86-00513R001445820004-3"

"APPROVED FOR RELEASE: 08/22/2000 CIA-RDP86-00513R001445820004-3

RUBINOWICA, A.

"A simple Deduction for the Expression of the Kirchhoff Law of Waves." p. 225
(Acta Microbiologica Polnica. Vol. 12, no. 3/4, 1953 Warszawa.)

SO: Monthly List of East European Accessions, Vol. 3, no. 6 Library of Congress, June 1954, Uncl.

APPROVED FOR RELEASE: 08/22/2000 CIA-RDP86-00513R001445820004-3"

"APPROVED FOR RELEASE: 08/22/2000 CIA-RDP86-00513R001445820004-3

RUBINOWICZ, A

POLON

535.42

7337. The rôle of diffraction waves in Fraunhofer diffraction phenomena. A. RUBINOWICZ. *Acta phys. Polon.*, 13, *No.* 1, 3–13 (1954) *in German.*

Fraunhöfer diffraction phenomena can be explained by means of Kirchhoff theory in terms of the interference of waves arising from the diffracting boundaries. By a simple transformation, these diffraction waves can be treated by the corresponding formulae of Fresnel diffraction. This method is particularly useful for many special cases, such as a 3-dimensional diffracting boundary. R. W. FISH

APPROVED FOR RELEASE: 08/22/2000 CIA-RDP86-00513R001445820004-3"

"APPROVED FOR RELEASE: 08/22/2000 CIA-RDP86-00513R001445820004-3

RUBINOWICZ, A.

POL.

The Propagation of Transient Electromagnetic Signals in Waveguides. A. Rubinowicz. (*Acta phys. polonica*, 1954, Vol. 13, No. 2, pp. 115-133. In German.) The propagation of a monochromatic TE-wave disturbance is considered, commencing at a given instant. If the wavelength is less than the mode cut-off wavelength, a wave is propagated in two parts, the precursor transient and the main signal. The precursor signal travels with the free-space velocity for the medium filling the guide, the main signal with the group velocity. The field intensities for both parts of the signal are obtained in terms of series involving Bessel functions and asymptotic approximation. Energy relations in the wave are considered, and extensions of the results are mentioned.

APPROVED FOR RELEASE: 08/22/2000 CIA-RDP86-00513R001445820004-3"

"APPROVED FOR RELEASE: 08/22/2000 CIA-RDP86-00513R001445820004-3

ACCESSION NR: AP4040365 P/0045/64/025/003/0453/0472

AUTHOR: Rubinowicz, A. (Warsaw)

TITLE: Structure of the source system of electric and magnetic multipole radiation

SOURCE: Acta physica polonica, v. 25, no. 3, 1964, 453-472

TOPIC TAGS: multipole radiation, electric multipole radiation, magnetic multipole radiation, radiation source

ABSTRACT: A relationship, from which a clear picture of the source system of electric and magnetic multipole radiation can be obtained, has been derived with the aid of group theory. They combine two types of electromagnetic multipoles: a so-called spherical-function-multipole (K-multipole), defined by means of Debye potential, containing spherical function of a definite order; and a so-called opposition multipole (G-multipole), obtained by the Maxwell method, proceeding with the source system of electric or magnetic dipole radiation through a continuous parallel confrontation of source systems. In this case the corresponding pole has an opposite charge sign. The structure of the source system of these electric or magnetic G-multipoles will be given directly by the generation method. To obtain a picture of the structure of K-multipole source system the fields of this

APPROVED FOR RELEASE: 08/22/2000 CIA-RDP86-00513R001445820004-3"

"APPROVED FOR RELEASE: 08/22/2000 CIA-RDP86-00513R001445820004-3

ACCESSION NR: AP4040365

multipole have to be expressed through the fields of G-multipole either by direct calculation or applying group theory. The direct calculation method was used in the work of Rubinowicz, A., Acta phys. Polon., 24, 519, (1963). The comparison of both methods shows that the advantage of group theory method is that it directly provides the necessary relationship without calculation work. Its disadvantage is that the Maxwell spherical function cannot be used. As a result not all the details characterizing electromagnetic field and which are obtainable through confrontation of K-multipoles in any direction can be obtained. Orig. art. has 49 formulas.

ASSOCIATION: Polnische Akademie der Wissenschaften (Polish Academy of Science)

SUBMITTED: 08Oct63 DATE ACQ: 15May64 ENCL: 00

SUB CODE: GP NO REF SOV: 000 OTHER: 009

Card 2/2

APPROVED FOR RELEASE: 08/22/2000 CIA-RDP86-00513R001445820004-3"

"APPROVED FOR RELEASE: 08/22/2000 CIA-RDP86-00513R001445820004-3

RUBINOWICZ, A.

Is the term electric or magnetic multipole radiation justified? Acta physica Pol 24 no.4:519-554 O '63.

1. Polnische Akademie der Wissenschaften, Warschau.

APPROVED FOR RELEASE: 08/22/2000 CIA-RDP86-00513R001445820004-3"

"APPROVED FOR RELEASE: 08/22/2000 CIA-RDP86-00513R001445820004-3

RUBINOWICZ, A.

Tensor field free of source and connected with an electromagnetic field and its tensor potential. Acta physica Pol 21 no.5:451-468 My '62.

1. Polnische Akademie der Wissenschaften, Warschau.

APPROVED FOR RELEASE: 08/22/2000 CIA-RDP86-00513R001445820004-3"

"APPROVED FOR RELEASE: 08/22/2000 CIA-RDP86-00513R001445820004-3

RUBINOWICZ, A.

Diffraction waves of various fields in case of any incident wave. Acta physica Pol 23 no.6:727-744 Je '63.

1. Polnische Akademie der Wissenschaften, Warszawa.

APPROVED FOR RELEASE: 08/22/2000 CIA-RDP86-00513R001445820004-3"

"APPROVED FOR RELEASE: 08/22/2000 CIA-RDP86-00513R001445820004-3

B-JR.

P/045/62/021/004/010/C13
B112/B101

AUTHOR: Rubinowicz, A.

TITLE: Proof of uniqueness for the electromagnetic jump value problem

PERIODICAL: Acta Physica Polonica, v. 21, no. 4, 1962, 415 - 422

TEXT: The author proves the uniqueness of the following electromagnetic jump value problem: (1) A given electromagnetic field $\vec{E}$, $\vec{H}$ is continuous together with its first derivatives all over the space $R_\omega$ with exception of certain regions defined in the following. (2) The jumps $(\vec{H}_1 - \vec{H}_2)\times\vec{n} = (4\pi/c)\vec{i}_e$, $\vec{n}\times(\vec{E}_1 - \vec{E}_2) = (4\pi/c)\vec{i}_m$ (1.2) are prescribed on the surfaces f. (3) The discontinuities of the surface current densities $\vec{i}_e$ and $\vec{i}_m$, as given by $(\vec{i}_e|_1 - \vec{i}_e|_2)\vec{N} = -i\omega\varepsilon_e$, $(\vec{i}_m|_1 - \vec{i}_m|_2)\vec{N} = -i\omega\varepsilon_m$, (1.3) occur along the curves K on the surfaces f. The radial components of the field strengths satisfy the conditions $E_\rho = \varepsilon_e/2\rho$, $H_\rho = \varepsilon_m/2\rho$, (1.4) the axial components the conditions $E_s$ and $H_s$ finite, (1.5) and the angular

Card 1/2

APPROVED FOR RELEASE: 08/22/2000 CIA-RDP86-00513R001445820004-3"

"APPROVED FOR RELEASE: 08/22/2000 CIA-RDP86-00513R001445820004-3



components the conditions $E_\varphi = const/\rho^{\alpha}$, $H_\varphi = const/\rho^{\alpha'}$ (1.6) ($0<\alpha<1$, $0<\alpha'<1$). (4) Sommerfeld's conditions of emission and finiteness are fulfilled at infinity.

ASSOCIATION: Polnische Akademie der Wissenschaften (Polish Academy of Sciences) Warsaw

SUBMITTED: August 24, 1961



APPROVED FOR RELEASE: 08/22/2000 CIA-RDP86-00513R001445820004-3"

"APPROVED FOR RELEASE: 08/22/2000 CIA-RDP86-00513R001445820004-3

RUBINOWICZ, A.

The diffraction wave in the case of an optional incident wave of light. Acta physica Pol 21 no.1:61-87 '62.

1. Polnische Akademie der Wissenschaften, Warszawa.

APPROVED FOR RELEASE: 08/22/2000 CIA-RDP86-00513R001445820004-3"

"APPROVED FOR RELEASE: 08/22/2000 CIA-RDP86-00513R001445820004-3

P/045/62/021/005/001/009
I069/I269

AUTHOR: Rubinowicz, A.

TITLE: On a source-free tensor field, and its tensor potential, when associated with an electromagnetic field

PERIODICAL: Acta physica polonica, v.21, no.5, 1962, 451-468

TEXT: For incident divergence of convergent spherical waves the diffraction wave is derivable from a source-free vector field V. This is uniquely determined by the solution of the wave equation describing the incident wave. The vector potential W for the field V can be established by a simple geometric method (A. Rubinowicz, Acta phys. Polon., 21, 61 (1962) ). For electromagnetic fields V and W being themselves vector fields, have to be replaced by tensorial

Card 1/3

APPROVED FOR RELEASE: 08/22/2000 CIA-RDP86-00513R001445820004-3"

"APPROVED FOR RELEASE: 08/22/2000 CIA-RDP86-00513R001445820004-3

P/045/62/021/005/001/009
I069/I269

On a source-free tensor field...

fields and potentials. The Helmholtz-Huygens principle in Kirchhoff's electromagnetic theory was fomulated by H.A. Lorentz and Larmor ( A. Rubinowicz, Die Beugungswelle in der Kirchohoffschen Theorie der Beugung, Warsaw, 1957, p.238) and also differently by F. Kottler (Ann. Phys. (Leipzig), (4) 71, 457 (1923) ). However, both formulations, if applied to the Maxwell equations, are equivalent and both can be expressed in terms of two tensor fields $\hat{V}_e$ and $\hat{V}_m$ (carets denote tensors of the second rank in a three-dimensional space), which determine the electric and magnetic fields. These, in turn, are uniquely determined by a given solution of the Maxwell equations. These vector fields having vanishing divergence are derivable from tensorial potentials thereby providing two separate formulations of the electromagnetic Helmholtz-Huygens principle. These are of importance for Kirchhoff's theory of diffraction when isolated for arbitrary incidence of the light waves. An integral theorem for tensorial fields is applied

Card 2/3

APPROVED FOR RELEASE: 08/22/2000 CIA-RDP86-00513R001445820004-3"

"APPROVED FOR RELEASE: 08/22/2000 CIA-RDP86-00513R001445820004-3

P/045/62/021/005/001/009
I069/I269

On a source-free tensor field...

analogous to Stoke's theorem for vectorial fields. Utilising the Larmor and Kottler formulations of the Helmholtz-Huygens principle, the tensorial potentials for arbitrary electromagnetic fields is derived geometrically. The author similarly derived the Miyamoto-Wolf vector potentials associated with scalar wave equations.

ASSOCIATION: Polonishce Akademie des Wissenschaften (Polish Academy of Science, Warsaw)

SUBMITTED: September 4, 1961

Card 3/3

APPROVED FOR RELEASE: 08/22/2000 CIA-RDP86-00513R001445820004-3"

"APPROVED FOR RELEASE: 08/22/2000 CIA-RDP86-00513R001445820004-3

RUBINOWICZ, A.

Evidence of synonymity for the electromagnetic problem of shifts. Acta physica Pol 21 no.4:415-422 Ap '62.

1. Polnische Akademie der Wissenschaften, Warszawa.

APPROVED FOR RELEASE: 08/22/2000 CIA-RDP86-00513R001445820004-3"

"APPROVED FOR RELEASE: 08/22/2000 CIA-RDP86-00513R001445820004-3

RUBINOWICZ, A.

Reciprocity theorem and Babinet's Principle in Kirchhoff's theory of diffraction. Acta physica pol 20 no.9:725-735 '61.

1. Polska Akademia Nauk.

APPROVED FOR RELEASE: 08/22/2000 CIA-RDP86-00513R001445820004-3"

"APPROVED FOR RELEASE: 08/22/2000 CIA-RDP86-00513R001445820004-3

P/045/60/019/005/001/005
B011/B059

AUTHOR: Rubinowicz, A.

TITLE: "Rearranged" and Two-parameter Eigenvalue Problems Which Can Be Solved by the Method of Polynomials

PERIODICAL: Acta Physica Polonica, 1960, Vol. 19, No. 5, pp. 533 - 558 (Poland)

TEXT: This article deals with eigenvalue problems of quantum theory which can be solved by the Sommerfeld method of polynomials (Refs. 11, 12, 13, 14, and 18). Such problems are defined by second-order differential equations, and may be assumed to have the following form:

$$\frac{d}{dx} p(x)\frac{df}{dx} - (q(x) - \beta r(x))f = 0.$$

The chief problem discussed by the author is the so-called "rearrangement" (this term is introduced by the author) of an eigenvalue problem containing a certain parameter in its coefficients q(x) and r(x). If this parameter does not appear in p(x), the original problem can be transformed

Card 1/4

APPROVED FOR RELEASE: 08/22/2000 CIA-RDP86-00513R001445820004-3"

"APPROVED FOR RELEASE: 08/22/2000 CIA-RDP86-00513R001445820004-3



into a new eigenvalue problem, with the above parameter appearing only in the new $\beta$. The new "rearranged" eigenvalue problem has the same eigenfunctions as the original problem, provided basic range and boundary conditions are the same. If these rearranged eigenvalue problems are linear, new orthogonality relations of the known form may be derived for the eigenfunctions of the original problem. Some eigenvalue problems of the kind considered may be rearranged into several different eigenvalue problems, a fact that is shown for the generalized coordinate Legendre spherical harmonics as an example. In many cases the eigenvalue problem can be rearranged only into a quadratic eigenvalue problem, which is due to the way the parameter is included in the expression $q(x) - \beta r(x)$. These rearranged quadratic eigenvalue problems have the form

$$\frac{d}{dx}p(x)\frac{df}{dx} - (q'(x) - \beta' r'(x) - \beta'^2 r''(x))f = 0;$$

$q'(x) = q(x) - \beta r(x) + \beta' r'(x) + \beta'^2 r''(x)$, the unprimed quantities referring to the original linear eigenvalue problem. A great disadvantage



APPROVED FOR RELEASE: 08/22/2000 CIA-RDP86-00513R001445820004-3"

"APPROVED FOR RELEASE: 08/22/2000 CIA-RDP86-00513R001445820004-3

"Rearranged" and Two-parameter Eigenvalue Problems Which Can Be Solved by the Method of Polynomials

P/045/60/019/005/001/005
B011/B059

of quadratic eigenvalue problems is that their orthogonality conditions depend on the eigenvalues of the respective eigenfunctions. Another section of the article treats eigenvalue problems with two or more eigenvalue parameters. The author solves the problem of finding pairs of the two eigenvalue parameters $\beta_1$ and $\beta_2$ with eigensolutions for which the integrals of one of the two conditions given for normalization and orthogonality are convergent. A linear relation connects $\beta_1$ and $\beta_2$, which, in the $\beta_1$-versus-$\beta_2$ plane, means a straight line whose intersection with the eigenvalue curves determines a series of discrete values of $\beta_1$ and $\beta_2$. In the last section of the paper, the author shows that the parameter m appearing in the factorization method (Refs. 3, 4, 5, 15, 16, and 17) has to be regarded as the "eigenvalue quantum number" of a rearranged linear or quadratic eigenvalue problem. Throughout the work, the eigenvalue problems of the coordinate spherical harmonics and of the radial function of the one--electron atom are taken as specific examples. There are 1 figure and 18 references: 6 US, 5 German, 1 Polish, 3 Dutch, and 3 Irish.

Card 3/4

APPROVED FOR RELEASE: 08/22/2000 CIA-RDP86-00513R001445820004-3"

"APPROVED FOR RELEASE: 08/22/2000 CIA-RDP86-00513R001445820004-3

"Rearranged" and Two-parameter Eigenvalue Problems Which Can Be Solved by the Method of Polynomials

P/045/60/019/005/001/005
B011/B059

ASSOCIATION: Institute of Physics of the Polish Academy of Sciences, Institute of Theoretical Physics of Warsaw University

SUBMITTED: February 23, 1960

Card 4/4

APPROVED FOR RELEASE: 08/22/2000 CIA-RDP86-00513R001445820004-3"

"APPROVED FOR RELEASE: 08/22/2000 CIA-RDP86-00513R001445820004-3

81124

P/045/60/019/02/11/013
B006/B011

24.4400

AUTHOR: Rubinowicz, A. (Krynica)

TITLE: Boundary Problems in the Field of Linear Scalar Fields in Isotropic and Homogeneous Spaces as Defined by Elementary Laws

PERIODICAL: Acta Physica Polonica, 1960, Vol. 19, No. 2, pp. 235-243

TEXT: In continuation of Ref. 1, the author investigates the linear scalar field, which is defined by the elementary law $\varphi = \varphi(r)$, namely,

$$F(x,y,z) = \sum_{a,b,c=0}^{\infty} A_{abc} \frac{\partial^l \varphi(r)}{\partial x^a \, \partial y^b \, \partial z^c}, \quad (l = a+b+c),$$

where the coefficients $A_{abc}$ can be arbitrary complex figures. For such fields, the author investigates the solvability of boundary problems which are defined by given values for $F$, $\partial F/\partial N$, $\partial^2 F/\partial N^2$, .... $\partial^{n-1} F/\partial N^{n-1}$ on the boundary surface of the space, in which the boundary problem is given. It is proven that such a boundary problem can be solved for finite n-values only if the elementary

Card 1/2

APPROVED FOR RELEASE: 08/22/2000 CIA-RDP86-00513R001445820004-3"

"APPROVED FOR RELEASE: 08/22/2000 CIA-RDP86-00513R001445820004-3

81124

Boundary Problems in the Field of Linear Scalar Fields in Isotropic and Homogeneous Spaces as Defined by Elementary Laws

P/045/60/019/02/11/013
B006/B011

law $\varphi = \varphi(r)$ and hence also the field $F(x,y,z)$ are solutions of a partial differential equation of the form $\sum_{i=0}^{n} a_i \Delta^i F(x,y,z) = 0$, $(a_n \neq 0)$. The results are briefly discussed, and some problems concerning their application to the field theory and the quantization of fields on the basis of an elementary law are discussed. There is 1 non-Soviet reference.

ASSOCIATION: Physikalisches Institut der Universitaet Warschau (Physics Institute of the Warsaw University). Physikalisches Institut der Polnischen Akademie der Wissenschaften (Physics Institute of the Polish Academy of Sciences)

SUBMITTED: September 9, 1959

Card 2/2

APPROVED FOR RELEASE: 08/22/2000 CIA-RDP86-00513R001445820004-3"

"APPROVED FOR RELEASE: 08/22/2000 CIA-RDP86-00513R001445820004-3

Rubinowicz, A. Ein bisher nicht beachteter Fall, in dem der Kirchhoffsche Ansatz zur angenäherten Beschreibung der Beugungserscheinungen versagt. Acta Phys. Polon. 17 (1958), 13–20. (Russian summary)

This is an essay on some of the limitations on the Kirchoff approximations in diffraction theory.

A Formerly Unnoticed Case in Which The Kirchoff Method Fails in the Description of Diffraction Phenomena.

APPROVED FOR RELEASE: 08/22/2000 CIA-RDP86-00513R001445820004-3"

"APPROVED FOR RELEASE: 08/22/2000 CIA-RDP86-00513R001445820004-3

P/045/60/0[illegible]/01/002/008
B018/B000

AUTHOR: Rubinowicz, A.

TITLE: On an Experimental Method of Distinguishing the Various Types of Multipole Radiation in the X-Ray Spectrum
I. Generalization of the Reciprocity Theorem for Electromagnetic Multipole Radiation Sources

PERIODICAL: Acta Physica Polonica, 1960, Vol 19, Nr 1, pp 21 - 39 (Poland)

ABSTRACT: The author generalizes the electromagnetic reciprocity theorem given by H.A. Lorentz (1896) for electric and magnetic multipole radiation of any order. Since the type of multipole radiation can be determined by the Zeeman effect only in the range of optical wavelengths, it is useful to employ wide-angle interferences in the region of X-rays. However, the intensity of these diffraction fringes is so low that its measurement with a reasonable accuracy is possible only with photomultipliers. The present paper is a preparatory work for the solution of the problem. First, the Lorentz integral theorem is written down thus used as a base of the proof of the reciprocity theorem. The considerations are restricted to harmonic-periodic electromagnetic fields only. The electromagnetic field is expanded into series of multipole fields. Then, the

Card 1/2

APPROVED FOR RELEASE: 08/22/2000 CIA-RDP86-00513R001445820004-3"

"APPROVED FOR RELEASE: 08/22/2000 CIA-RDP86-00513R001445820004-3

On an Experimental Method of Distinguishing the Various Types of Multipole Radiation in the X-Ray Spectrum. I. Generalization of the Reciprocity Theorem for Electromagnetic Multipole Radiation Sources

P/045/60/019/01/002/008
B018/B000

generalized electromagnetic reciprocity theorem is derived from the Lorentz integral theorem by integrating over only two spherical surfaces enclosing the point sources $Q_1$ and $Q_2$.

Furthermore, the author calculates the expansion coefficients appearing in the reciprocity theorem for electric and magnetic dipole and electric quadrupole emission. The numerical value of these coefficients depends on the normalization of the spherical harmonics occurring in the multipole-field expansion of the electromagnetic field. The author applies the normalization given by C.G. Darwin. The theorem described is applicable for the solution of various physical and engineering problems. There are 13 references.

ASSOCIATION: Physikalisches Institut der Polnischen Akademie der Wissenschaften (Physics Institute of the Polish Academy of Sciences). Institut für theoretische Physik der Warschauer Universität (Institute of Theoretical Physics of Warsaw University)

SUBMITTED: May 15, 1959

Card 2/2

APPROVED FOR RELEASE: 08/22/2000 CIA-RDP86-00513R001445820004-3"

"APPROVED FOR RELEASE: 08/22/2000 CIA-RDP86-00513R001445820004-3

K-5

POLAND/Optics - Physical Optics

Abs Jour : Ref Zhur - Fizika, No 4, 1959, No 6739

Author : Rubinowicz A.
Inst : Polish Academy of Sciences, Warsaw, Poland
Title : An Hitherto Unnoticed Case, in Which the Kirchhoff Integral Cannot be Used to Describe the Phenomenon of Diffraction

Orig Pub : Acta phys. polon., 1958, 17, No 1, 13-20

Abstract : The author examines the limitations of the applicability of the Kirchhoff diffraction theory, connected with the circumstance that this theory does not take into account the possibility of multiple diffraction. The Kirchhoff theory is not applicalbe in all cases, when the individual elements of the edge, on which the diffraction takes place, lie in the zone in which the intense diffracted wave from other elements of the edge passes. This takes place in the case of diffraction by a very small or very narrow aperture. It is shown that the Kirchhoff method gives erroneous results also in that case, when the different points of the edge lie either exactly or

Card : 1/2



APPROVED FOR RELEASE: 08/22/2000 CIA-RDP86-00513R001445820004-3"

"APPROVED FOR RELEASE: 08/22/2000 CIA-RDP86-00513R001445820004-3

POL 1998. Fields defined by elementary laws. A. Rubinowicz. Acta phys. Polon. 11, No. 2, [illegible]

Supposing that a given scalar field is isotropic [illegible] and corresponds to a linear

APPROVED FOR RELEASE: 08/22/2000 CIA-RDP86-00513R001445820004-3"

"APPROVED FOR RELEASE: 08/22/2000 CIA-RDP86-00513R001445820004-3

ŁUKASIEWICZ, A.

Diffusion of waves in the electromagnetic field and evidence for the problem of value of Maxwell equation elements. In German. p. 209

ACTA PHYSICA POLONICA vol. 14, no. 3, 1955

Warszawa, Poland

so. EAST EUROPEAN ACCESSIONS LIST vol. 5, no. 10 Oct. 1956

APPROVED FOR RELEASE: 08/22/2000 CIA-RDP86-00513R001445820004-3"

"APPROVED FOR RELEASE: 08/22/2000 CIA-RDP86-00513R001445820004-3

RUBINOWICZ, A

538.566

4524. PROPAGATION OF DISCONTINUITIES IN ELECTROMAGNETIC INTENSITIES AND PROOF OF UNIQUENESS FOR THE INITIAL VALUE PROBLEM FOR MAXWELL'S EQUATIONS. A.Rubinowicz.

Acta phys. Polon., Vol. 14, No. 3, 209-24 (1955). In German.

In an uncharged medium, let $\Delta\vec{E}$ and $\Delta\vec{H}$ be the discontinuities in the electric and magnetic intensities at a surface S, every point of which moves with velocity v in the direction of the normal to the surface. It is shown that in general there will be conduction currents in S, and that S will act as an energy source or sink. If these currents are zero, S makes no contribution to the energy balance of the field; in this case v is equal to the velocity of light $c/\sqrt{(\epsilon\mu)}$ and $\Delta\vec{E}$ and $\Delta\vec{H}$ are tangential to S. The uniqueness theorem is established for prescribed charge and convection current densities, $\Delta\vec{E}$ and $\Delta\vec{H}$ satisfying suitable conditions over fixed or moving surfaces.

R.A.Newing

(1)

BDW

APPROVED FOR RELEASE: 08/22/2000 CIA-RDP86-00513R001445820004-3"

"APPROVED FOR RELEASE: 08/22/2000 CIA-RDP86-00513R001445820004-3

POLON

535.42

6529. A simple derivation of the expression for the Kirchhoff diffraction wave. A. RUBINOWICZ. *Acta phys. Polon.*, 12, *No.* 3–4, 225–[illegible] *In German.*

The expression derived by the author in 1917 [*Ann. Phys.* (*Leipzig*) 53, 257–78 (Dec. 14, 1917)] for the field produced by a point source of light and a screen has found extensive application. The present paper gives a very simple derivation of it.

P. M. DAVIDSON

APPROVED FOR RELEASE: 08/22/2000 CIA-RDP86-00513R001445820004-3"

"APPROVED FOR RELEASE: 08/22/2000 CIA-RDP86-00513R001445820004-3

Rubinowicz, Wojciech

Rubinowicz, Wojciech. Wektory i tensory. [Vectors ~~and Tensors~~]. Monografie Matematyczne. Tom XXII. Warszawa i Wrocław, 1950. [illegible] + 170 pp.

This book is a textbook of classical theoretical mechanics.

APPROVED FOR RELEASE: 08/22/2000 CIA-RDP86-00513R001445820004-3"

"APPROVED FOR RELEASE: 08/22/2000 CIA-RDP86-00513R001445820004-3

Source: Mathematical Rev Vol 12 No. 7

APPROVED FOR RELEASE: 08/22/2000 CIA-RDP86-00513R001445820004-3"

"APPROVED FOR RELEASE: 08/22/2000 CIA-RDP86-00513R001445820004-3

Rubinowicz, W.

2

Book—2814. Rubinowicz, W., and Krulikowski, W., Theoretical mechanics [Mechanika Teoretyczna]. Warszawa, Państwowe Tow. Nauk. Naukowe 1955, 42, [illegible]

[illegible] Newton's [illegible]

[illegible] Lagrange's equations [illegible] Hamilton, Maupertuis and Jacobi. III. Hamiltonian equations and their variational [illegible] their interpretation by Poisson and Jacobi, examples of Hamilton-Jacobi equations in relativistic mechanics); IV. Mechanics of rigid bodies (velocity and acceleration, impact and kinetic energy, tensors of second degree, equations of motion, equilibrium of forces, Euler's equations, examples of motion around a point, applications in geomechanics).

Full-page pictures of Newton, d'Alembert, Lagrange, and Hamilton are inserted.

J. J. Polivka, USA

VMH

APPROVED FOR RELEASE: 08/22/2000 CIA-RDP86-00513R001445820004-3"

"APPROVED FOR RELEASE: 08/22/2000 CIA-RDP86-00513R001445820004-3

APPROVED FOR RELEASE: 08/22/2000 CIA-RDP86-00513R001445820004-3"

"APPROVED FOR RELEASE: 08/22/2000 CIA-RDP86-00513R001445820004-3

RUBINOWICZ, Wojciech

Niels Bohr (1885-1962). Postepy fizyki 14 no. 3: 273-279 '63.

1. Czlonek rzeczywisty Polskiej Akademii Nauk, Warszawa.

APPROVED FOR RELEASE: 08/22/2000 CIA-RDP86-00513R001445820004-3"

"APPROVED FOR RELEASE: 08/22/2000 CIA-RDP86-00513R001445820004-3

(8)

Warsaw-Krakow, Postepy Fizyki, Vol 13, No 1, 1962.

1. "On the Deflection Wave for an Arbitrary Descending Wave in Kirchhoff's Diffraction Theory," Wojciech RUBINOWICZ of PAN (Polska Akademia Nauk, Polish Academy of Sciences): pp 3-13.

2. "On Certain Problems in Photoluminescence of Solutions," Aleksander JABLONSKI of the Chair of Experimental Physics (Katedra Fizyki Doswiadczalna) of the Mikolaja Kopernika University (Uniwersytet) at Torun: pp 15-25.

3. "Application of Magnetic Resonance Methods in the Investigation of Atom Energy Levels," Tadeusz SKALINSKI of the Physics Institute (Instytut Fizyki) of PAN at Warsaw: pp 27-39.

4. "On Some Problems of Transition Probabilities in Atoms and the Oscillator Power of Spectral Lines," Maria Danuta KUKISZ and Maria SZYNAROWSKA of the Physics Institute (Instytut Fizyki) of the Jagiellonskiego University (Uniwersytet) at Krakow: pp 41-101.

RUBINOWICZ, W.

-- 1/1 --

APPROVED FOR RELEASE: 08/22/2000 CIA-RDP86-00513R001445820004-3"

"APPROVED FOR RELEASE: 08/22/2000 CIA-RDP86-00513R001445820004-3

RUBINOWICZ, Wojciech

Erwin Schroedinger (Aug. 12, 1886-Apr. 1, 1961). Postepy fizyki 12 no.4:385-387 '61.

APPROVED FOR RELEASE: 08/22/2000 CIA-RDP86-00513R001445820004-3"

"APPROVED FOR RELEASE: 08/22/2000 CIA-RDP86-00513R001445820004-3

Apr 52

Poland/Nuclear Physics - Gamma radiation

RUBINOWICZ, Wojciech

"Multipole Gamma Radiation and the Determination of Nuclear Spins," Wojciech Rubinowicz, Inst of Theoretical Physics III, Univ of Warsaw

"Postepy Fizyki," Vol 3, No 1, pp 5-23

Emphasizes Polish contributions to sciences; ~~in that author published~~ in 1928, ~~his~~ author hypotheses on origin of forbidden spectral lines, later confirmed in Pasadena and Amsterdam. In 1934, H. Niewodniczanski discovered dipole magnetic radiation. Other contributors were Milianczuk in 1935, Jenkins and Mrozowski in 1941, and Opechowski. Reviews foreign literature on subject.

252T87

APPROVED FOR RELEASE: 08/22/2000 CIA-RDP86-00513R001445820004-3"

"APPROVED FOR RELEASE: 08/22/2000 CIA-RDP86-00513R001445820004-3

24(5) PHASE I BOOK EXPLOITATION POL/3267

Rubinowicz, Wojciech

Kwantowa teoria atomu (Quantum Theory of the Atom) Warsaw, Państwowe Wydo-wo Naukowe [1957] 556 p. 3,100copies printed.

PURPOSE: This book is intended for students of theoretical physics as well as for scientists studying the quantum theory of the atom.

COVERAGE: This book deals with the quantum theory of the atom. It covers the classical and the modern quantum theories and is based on the latest developments in this field of science. It includes the theoretical principles of the quantum theories as well as supplements for calculating various effects. Exercises are included for each chapter. No personalities are mentioned. No references are given.

TABLE OF CONTENTS:

PART ONE. FUNDAMENTALS AND APPLICATIONS OF THE OLD QUANTUM THEORY

Ch. I. Discovery of Quanta

Card 1/10

APPROVED FOR RELEASE: 08/22/2000 CIA-RDP86-00513R001445820004-3"

"APPROVED FOR RELEASE: 08/22/2000 CIA-RDP86-00513R001445820004-3

Quantum Theory (Cont.) POL/3267


1. Energy quanta 11
2. Quanta of action 13
3. Light quanta 15
4. Compton effect 17

Ch. II. Discovery of the Atomic Nucleus 23
1. Two-body problem 30
2. Theory of single scattering 34
3. Nuclear charge and the chemical properties of atoms

Ch. III. Quantum States of the Atom 37
1. Fundamental postulates of the old quantum theory 39
2. Experimental basis for Bohr's postulates

Ch. IV. Spectra of an Atom With One Electron 44
1. Sommerfeld quantum conditions 49
2. Atom with one electron according to classical mechanics 53
3. Spectra of an atom with one electron in non-relativistic physics 56
4. Fundamentals of relativistic mechanics 61
5. Calculation of two integrals 64
6. Sommerfeld formula for the energy levels of a fine structure


Card 2/10

APPROVED FOR RELEASE: 08/22/2000 CIA-RDP86-00513R001445820004-3"

"APPROVED FOR RELEASE: 08/22/2000 CIA-RDP86-00513R001445820004-3



7. Fine structure of spectra of atoms with one electron 70
8. Zeeman effect and spatial quantization 72
9. Moment of momentum of an electromagnetic field and selection rules 79

Ch. V. Problems of the Correspondence Principle 89
1. Multiperiodic mechanical systems 94
2. Degenerate and nondegenerate mechanical systems. Bohr quantum conditions 97
3. Correspondence principle 101
4. Correspondence principle and selection rules 104
5. Multipole radiation 108
6. Adiabatic principle

Ch. VI. General Properties of Spectra of Atoms With Many Electrons 110
1. Rydberg-Ritz formula. Luminescent electron. Atomic core 111
2. General properties of the course of spectral forms 116
3. Outer orbits of the luminescent electron 118
4. Orbits of a luminescent electron



APPROVED FOR RELEASE: 08/22/2000 CIA-RDP86-00513R001445820004-3"

"APPROVED FOR RELEASE: 08/22/2000 CIA-RDP86-00513R001445820004-3



Ch. VII. Fine Structure of Spectral Terms 122
1. Experimental data 124
2. Original tests explaining the fine structure of spectral terms 127
3. Discovery of the electron spin. Normal coupling 133
4. Spectral multiplet lines 137
5. Anomalous Zeeman effect 141
6. Atom containing one electron with spin 145
7. Stern-Gerlach experiment 147
8. Einstein-De Haas experiment

Ch. VIII. Pauli Principle. Periodic System of the Elements. X-ray Spectra 149
1. Pauli principle 152
2. Periodic system of chemical elements 162
3. X-ray spectra

Ch. IX. Band Spectra 169
1. Bands produced by rotational transitions 172
2. Bands produced by vibrational and rotational transitions 175
3. Bands with electron jump



APPROVED FOR RELEASE: 08/22/2000 CIA-RDP86-00513R001445820004-3"

"APPROVED FOR RELEASE: 08/22/2000 CIA-RDP86-00513R001445820004-3



PART TWO. FUNDAMENTALS AND APPLICATIONS OF THE MODERN QUANTUM THEORY

Ch. X. Physical and Mathematical Fundamentals of Wave Mechanics (Schroedinger Equation and General Theory of True Linear Operators) 180
1. Discovery of the modern quantum theory 182
2. Matter waves and the special relativity theory 184
3. Matter waves and quantum conditions 189
4. Experimental proof of the existence of matter waves 190
5. Schroedinger wave equations 198
6. Eigenvalue problems 203
7. Hermitian or true operators 208
8. Properties of eigenfunctions 217
9. Products of operators 221
10. Representatives and representations of functions and operators 231
11. Unitary transformations

Ch. XI. Simplest Problems Specially Pertaining to Wave Mechanics 236
1. Linear harmonic oscillator 246
2. Moment of momentum and its operators



APPROVED FOR RELEASE: 08/22/2000 CIA-RDP86-00513R001445820004-3"

"APPROVED FOR RELEASE: 08/22/2000 CIA-RDP86-00513R001445820004-3



3. Two-body problem. Rotator 258
4. Atom with one electron 262
5. Zeeman effect 270
6. Eigenvalue problems of momentum operators 271

Ch. XII. Physical Interpretation of the Modern Quantum Theory
1. Statistical description of phenomena in nature 275
2. Measurement of position of a matter point 276
3. Interpretation of the indeterminate form of Heisenberg with the aid of wave trains 279
4. Statistical interpretation of wave functions 282
5. Continuity equation 288
6. Passage of particle through the potential divider. Channel effect 292
7. Measurements of physical magnitudes whose operators are functions of coordinates 299
8. Measurements of physical magnitudes appertaining to true free operators 300
9. Representation of momentum 308
10. Heisenberg quantum mechanics 316
11. Dirac method for phase symbols 325



APPROVED FOR RELEASE: 08/22/2000 CIA-RDP86-00513R001445820004-3"

"APPROVED FOR RELEASE: 08/22/2000 CIA-RDP86-00513R001445820004-3



Ch. XIII. Calculation of Perturbations for Eigenvalue Problems 300
1. Heterogeneous eigenvalue problems 332
2. Schroedinger calculation of perturbations in case of non-degenerate eigenvalues 334
3. Calculation of perturbations in case of degenerate eigenvalues 336
4. Ground state of an atom with two electrons 341
5. Excited states of an atom with two electrons 348
6. Electron spin and the Pauli principle in the modern quantum theory 359
7. Problem of chemical bonding. Hydrogen particle. Exchange energies 371
8. Collision theory

Ch. XIV. Dirac Equation 380
1. Schroedinger relativistic wave equation 382
2. Dirac equation in case the external fields do not function 386
3. Dirac equation in case the external fields do function 390
4. Continuity equation 392
5. Moment of momentum 395
6. Atom containing one electron with spin
7. Adverse energies. Positron. Pair production. Annihilation of



APPROVED FOR RELEASE: 08/22/2000 CIA-RDP86-00513R001445820004-3"

"APPROVED FOR RELEASE: 08/22/2000 CIA-RDP86-00513R001445820004-3



electrons 406

Ch. XV. Quantization of the Electromagnetic Field. Emission and Absorption of Light

1. Hamiltonian function of electromagnetic radiation in classical physics 410
2. Quantization of the electromagnetic field in vacuum 415
3. Calculation of perturbations for problems at initial (Dirac) magnitudes 418
4. Hamiltonian coupling and its matrix 423
5. Emission and absorption of light 427
6. Dipole radiation. Selection rules 436
7. Planck formula 443

Mathematical Supplements for Chapter XI.
Polynomial Method for Solving Eigenvalue
Problems of Differential Equations of the Second Order

1. Eigenvalue problems of the quantum theory 445
2. Common P function of Riemann 452
3. Differential equations of the second order and appropriate



APPROVED FOR RELEASE: 08/22/2000 CIA-RDP86-00513R001445820004-3"

"APPROVED FOR RELEASE: 08/22/2000 CIA-RDP86-00513R001445820004-3



eigenvalue problems solved by the common P function of Riemann 452
4. Eigenvalue problems of regular spherical functions 456
5. Riemann confluent P function. Differential equations of the second order and appropriate eigenvalue problems which can be solved with the aid of this function 459
6. First example of an eigenvalue problem in the infinite interval. Linear harmonic oscillator 463
7. Second example of an eigenvalue problem in the infinite interval. Function of the radius of an atom with one electron 465
8. Fixing the form of q "potentials" for which eigenvalue problems can be solved by the method of polynomials 467
9. Setting up formulas for solving eigenvalue problems by the Sommerfeld method 468

Exercises 471
Exercises relating to Chapter I 472
Exercises relating to Chapter II 474
Exercises relating to Chapter III 475
Exercises relating to Chapter IV 480
Exercises relating to Chapter V 482
Exercises relating to Chapter VI 482
Exercises relating to Chapter VII



APPROVED FOR RELEASE: 08/22/2000 CIA-RDP86-00513R001445820004-3"

"APPROVED FOR RELEASE: 08/22/2000 CIA-RDP86-00513R001445820004-3

POL/3267

Quantum Theory (Cont.)

Exercises relating to Chapter VIII 484
Exercises relating to Chapter IX 485
Exercises relating to Chapter X 486
Exercises relating to Chapter XI 495
Mathematical supplementary exercises relating to Chapter XI 508
Exercises relating to Chapter XII 510
Exercises relating to Chapter XIII 524
Exercises relating to Chapter XIV 534
Exercises relating to Chapter XV 539

Most Important Constants of Atomic Physics 543

Index 545

AVAILABLE: Library of Congress

TM/sfm
3-15-60

Card 10/10

APPROVED FOR RELEASE: 08/22/2000 CIA-RDP86-00513R001445820004-3"

"APPROVED FOR RELEASE: 08/22/2000 CIA-RDP86-00513R001445820004-3

RUBINOWICZ, Wojciech

POLAND

RUBINOWICZ, Wojciech

Full Member of the Polish Academy of Sciences (Czlonek rzecz. /rzeczywisty/ PAN /Polskiej Academii Nauk/, Warsaw

Crakow, Postepy fizyki, No 3, 1963, pp 273-80.

"Niels Bohr--1885-1962".

APPROVED FOR RELEASE: 08/22/2000 CIA-RDP86-00513R001445820004-3"

"APPROVED FOR RELEASE: 08/22/2000 CIA-RDP86-00513R001445820004-3

RUBINOWICZ, Wojciech

On the bending wave for an optional falling wave in Kirchhoff's difraction theory. Postepy fizyki 13 no.1:3-13 '62.

1. Polska Akademia Nauk, Warszawa.

APPROVED FOR RELEASE: 08/22/2000 CIA-RDP86-00513R001445820004-3"

"APPROVED FOR RELEASE: 08/22/2000 CIA-RDP86-00513R001445820004-3

RUBINOWICZ, Wojciech

"W Siedemdziesiata Rocznice Urodzin Nielsa Bohra," (On the Seventieth Birthday of Niels Bohr), by Wojciech Rubinowicz, Instytute of Theoretical Physics, University of Warsaw. Postepy Fizyki, Vol. VI, No. 6, PWN, 1955.

APPROVED FOR RELEASE: 08/22/2000 CIA-RDP86-00513R001445820004-3"

"APPROVED FOR RELEASE: 08/22/2000 CIA-RDP86-00513R001445820004-3

RUBINOWSKI, Z.

Some remarks concerning the appearance of mineralized ores in the southwestern part of Gory Swietokrzyskie. p.94

Warszaw, Poland. PRZEGLAD GEOLOGICZNY. Wydawnictwo Geologiczne. Vol.7, no.2, Feb.1959

Monthly List of East European Accessions Index, (EEAI) LC, Vol.8, no.6 June 1959
Uncl.

APPROVED FOR RELEASE: 08/22/2000 CIA-RDP86-00513R001445820004-3"

"APPROVED FOR RELEASE: 08/22/2000 CIA-RDP86-00513R001445820004-3

RUBINOWSKI, Zbigniew

More on Miedziana Gora and regional concepts of prospecting metal ores in the Gory Swietokrzyskie. Przegl geol 11 no.10: 447-448 O'63.

1. Instytut Geologiczny, Warszawa.

APPROVED FOR RELEASE: 08/22/2000 CIA-RDP86-00513R001445820004-3"

"APPROVED FOR RELEASE: 08/22/2000 CIA-RDP86-00513R001445820004-3

RUBINOWICR, A.

"Transmission of inconstant electromagnetic signals in the scale of waves."
Acta Microbiologica Polonica, Warazawa, Vol. 13, no. 2, 1954, p.115.

SO: Eastern European Accessions List, Vol 3, No 11, Nov 1954, L.C.

APPROVED FOR RELEASE: 08/22/2000 CIA-RDP86-00513R001445820004-3"

"APPROVED FOR RELEASE: 08/22/2000 CIA-RDP86-00513R001445820004-3

Robinowitz, A.

Robinowitz, A. Fortpflanzung von Sprüngen elektromagnetischer Feldstärken und Eindeutigkeitsbeweis für das Anfangswertproblem der Maxwellschen Gleichungen. Acta Phys. Polon 14 (1955), 209–224 (Russian summary). 1 - P/W

The discontinuities considered in this paper are jumps in the values of the components of the electric and magnetic vectors across a surface which is moving with an arbitrary velocity in its normal direction. An equation for the balance of energy is obtained; it follows that such a surface of discontinuity must carry an electric and magnetic current sheet. But if these currents vanish, then the moving surface, regarded as a hypersurface in a space-time manifold, must be a characteristic hypersurface of Maxwell's equations.

The uniqueness of the solution of Maxwell's equations which satisfies given intial conditions and which admits discontinuities of the type discussed in the first part of the paper, is proved.

It is not possible to give more details of the work in a brief space. *E. T. Copson* (St Andrews).

APPROVED FOR RELEASE: 08/22/2000 CIA-RDP86-00513R001445820004-3"

"APPROVED FOR RELEASE: 08/22/2000 CIA-RDP86-00513R001445820004-3

RUBINOWIXZ, WOJCIECH.

Wektory i tensory; porfecznik dla studentow fizyki.

Poland
Warszawa, 1950. 170 p.
(Monografie matematyczne, t.22)

Monthly List of East European Accessions Index (EEAI), LC, Vol. 8, No. 6, June 1959
Uncl.

APPROVED FOR RELEASE: 08/22/2000 CIA-RDP86-00513R001445820004-3"

"APPROVED FOR RELEASE: 08/22/2000 CIA-RDP86-00513R001445820004-3

RUBINOWSKI, Zbigniew

Preliminary results of the geological research on the lamprophyre intrusions in the Sierakow and Daleszyce region. Kwartalnik geol 5 no.4:1001-1002 '61.

1. Swietokrzyska Stacja Terenowa, Instytut Geologiczny, Warszawa.

APPROVED FOR RELEASE: 08/22/2000 CIA-RDP86-00513R001445820004-3"

"APPROVED FOR RELEASE: 08/22/2000 CIA-RDP86-00513R001445820004-3

RUBINOWSKI, Zbigniew

Lamprophyres of the Daleszyce region and their mineralization symptoms. Kwartalnik geol 6 no.3:245-270 '62.

1. Swietokrzyska Stacja Terenowa, Instytut Geologiczny, Warszawa.

APPROVED FOR RELEASE: 08/22/2000 CIA-RDP86-00513R001445820004-3"

"APPROVED FOR RELEASE: 08/22/2000 CIA-RDP86-00513R001445820004-3

RUBINOWSKI, Zbigniew; KOWALCZEWSKI, Zbigniew

Preliminary draft of a Paleozoic tectonic map of the Swietokrzyskie Mountains. Kwartalnik geol 6 no.4:814-815 '62.

1. Swietokrzyska Stacja Terenowa, Instytut Geologiczny, Warszawa.

APPROVED FOR RELEASE: 08/22/2000 CIA-RDP86-00513R001445820004-3"

"APPROVED FOR RELEASE: 08/22/2000 CIA-RDP86-00513R001445820004-3

RUBINOWSKI, Zbigniew

Geological research performed in connection with the ore mineralization phenomena in the Zechstein Profile of the Galezice-Bolechowice Syncline in the Swietokrzyskie Mountains. Kwartalnik geol 6 no.4:815-816 '62.

1. Swietokrzyska Stacja Terenowa, Instytut Geologiczny, Warszawa.

APPROVED FOR RELEASE: 08/22/2000 CIA-RDP86-00513R001445820004-3"

"APPROVED FOR RELEASE: 08/22/2000 CIA-RDP86-00513R001445820004-3

RUBINOWSKI, Zbigniew

Oremineralization in the Lower Zechstein of the Galezice region of the Swietokrzyskie Mountains. Kwartalnik geol 6 no.4:806-807 '62.

1. Swietokrzyska Stacja Terenowa, Instytut Geologiczny, Warszawa.

APPROVED FOR RELEASE: 08/22/2000 CIA-RDP86-00513R001445820004-3"

"APPROVED FOR RELEASE: 08/22/2000 CIA-RDP86-00513R001445820004-3

RUBINOWSKI, Zbigniew

Geological research performed in connection with the ore mineralization phenomenain the Zechstein Profile of the Galezice-Bolechowice Syncline in the Swietokrzyskie Mountains. Kwartalnik geol 6 no.4:815-816 '62.

1. Swietokrzyska Stacja Terenowa, Instytut Geologiczny, Warszawa.

APPROVED FOR RELEASE: 08/22/2000 CIA-RDP86-00513R001445820004-3"

"APPROVED FOR RELEASE: 08/22/2000 CIA-RDP86-00513R001445820004-3

KOWALCZEWSKI, Zbigniew; RUBINOWSKI, Zbigniew

Main tectonic elements of the Paleozoic of the Gory Swietokrzyskie Mountains anticlinorium. Przegl geol 10 no.9:451-455 S '62.

1. Swietokrzyska Stacja Terenowa, Instytut Geologiczny, Warszawa.

APPROVED FOR RELEASE: 08/22/2000 CIA-RDP86-00513R001445820004-3"

"APPROVED FOR RELEASE: 08/22/2000 CIA-RDP86-00513R001445820004-3

RUBINOWSKI, Zbigniew

POLAND

RUBINOWSKI, Zbigniew

Swietokrzyski Field Station, Geological Institute
(Swietokrzyska Stacja Terenowa Instytutu Geologicznego)

Warsaw, Kwartalnik geologiczny, No 3, 1963, pp 567-69.

"Problems of Regional Metalogenesis of the Paleozoic of the Swietokrzyski Mountains".

APPROVED FOR RELEASE: 08/22/2000 CIA-RDP86-00513R001445820004-3"

"APPROVED FOR RELEASE: 08/22/2000 CIA-RDP86-00513R001445820004-3

HARANCZYK, C.; RUBINOWSKI, Z.

Pyromorphite from Gorki Szczukowskie near Kielce. Bul geolog PAN 12 no.1:35-39 '64.

1. Department of Mineralogy and Petrography of the School of Mining and Metallurgy, Krakow and Gory Swietokrzyskie Field Station Kielce of the Institute of Geology. Submitted September 19, 1963.

APPROVED FOR RELEASE: 08/22/2000 CIA-RDP86-00513R001445820004-3"

"APPROVED FOR RELEASE: 08/22/2000 CIA-RDP86-00513R001445820004-3

RUBINOWSKI, Zbigniew

The sediment concept concerning the genesis of the copper deposits in the Miedziana Gora Mountain, near Kielce. Przegl geol 10 no.9:460-462 S '62.

1. Swietokrzyska Stacja Terenowa, Instytut Geologiczny, Warszawa.

APPROVED FOR RELEASE: 08/22/2000 CIA-RDP86-00513R001445820004-3"

"APPROVED FOR RELEASE: 08/22/2000 CIA-RDP86-00513R001445820004-3

RUDINOWSKI, M.

Recent observations on mineralization in the Miedzianka Swietokrzyska region. p. 299.

Instruction No. 30 of April 30, 1955, issued by the chairman of the Central Bureau of Geology concerning the documentation of drilling and the procedure with samples obtained by drilling.
(Supplement) p. 1.
No. 7, July 1955

SO: East European Accessions List (EEAL). LC. Vo. 4 N. 11 Nov. 1955 uncl.

APPROVED FOR RELEASE: 08/22/2000 CIA-RDP86-00513R001445820004-3"