"APPROVED FOR RELEASE: 08/22/2000 CIA-RDP86-00513R001445820007-0

RUBINSHTEYN, A.M.; SLINKIN, A.A.; YAKERSON, V.I.; FEDOROVSKAYA, E.A.

Reduction of CeO_2 in the process of CH_3COOH ketonization. Izv. AN SSSR Otd.khim.nauk no.12:2235-2237 D '61. (MIRA 14:11)

1. Institut organicheskoy khimii im. N.D.Zelinskogo AN SSSR.
(Cerium oxide) (Acetic acid) (Ketones)

APPROVED FOR RELEASE: 08/22/2000 CIA-RDP86-00513R001445820007-0"

"APPROVED FOR RELEASE: 08/22/2000 CIA-RDP86-00513R001445820007-0

RUBINSHTEYN, A.M.; PRIBYTKOVA, N.A.; AKIMOV, V.M.; KRETALOVA, L.D.; KLYACHKO-GURVICH, A.L.

Effect of alkali metal oxides on the activity, selectivity, and phase composition of binary catalysts based on Al_2O_3. Izv. AN SSSR. Otd.khim.nauk no.9:1552-1558 S '61. (MIRA 14:9)

1. Institut organicheskoy khimii im. N.D.Zelinskogo AN SSSR.
(Alkali metal oxides) (Catalysts)

APPROVED FOR RELEASE: 08/22/2000 CIA-RDP86-00513R001445820007-0"

"APPROVED FOR RELEASE: 08/22/2000 CIA-RDP86-00513R001445820007-0

YAKERSON, V.I.; FEDOROVSKAYA, E.A.; RUBINSHTEYN, A.M.

Ketonization of CH_3COOH over CdO and MgO, and the kinetics of the thermal decomposition of Cd $(Ch_3COO)_2$ and Mg $(CH_3COO)_2$. Dokl. AN SSSR 140 no.3:626-629 S '61. (MIRA 14:9)

1. Institut organicheskoy khimii im. N.D.Zelinskogo AN SSSR. Predstavleno akademikom A.A.Balandinym.
(Acetic acid) (Acetates)

APPROVED FOR RELEASE: 08/22/2000 CIA-RDP86-00513R001445820007-0"

"APPROVED FOR RELEASE: 08/22/2000 CIA-RDP86-00513R001445820007-0

YAKERSON, V.I.; FEDOROVSKAYA, E.A.; KLYACHKO-GURVICH, A.L.; RUBINSHTEYN, A.M.

Vapor phase catalytic ketonization of CH_3COOH over oxides of tetravalent metals and BeO. Izv. AN SSSR. Otd.khim.nauk no.8:1527-1528 Ag '61. (MIRA 14:8)

1. Institut organicheskoy khimii im. N.D. Zelinskogo AN SSSR.
(Acetic acid) (Ketones) (Catalysts)

APPROVED FOR RELEASE: 08/22/2000 CIA-RDP86-00513R001445820007-0"

"APPROVED FOR RELEASE: 08/22/2000 CIA-RDP86-00513R001445820007-0

37384
S/020/62/143/006/017/024
B106/B138

15.2540

AUTHORS: Dulov, A. A., Slinkin, A. A., Liogon'kiy, B. I., Rubinshteyn, A. M.

TITLE: The importance of conjugation and ordering to the semiconductor properties of polymers

PERIODICAL: Akademiya nauk SSSR. Doklady, v. 143, no. 6, 1962, 1355-1357

TEXT: To study the role of the degree of conjugation and the total structure of polymers in the formation of semiconductor properties, investigation was made of the electric, magnetic, and crystallographic properties of polyazophenylenes and aromatic polymers, which contain the groups $-CH_2-$ and $-CH_2-CH_2-$ between the benzene rings. Table 1 shows the results. The semiconductor properties of polymers containing conjugated bonds are determined by two rival factors: (1) the properties of individual macromolecules (degree of delocalization of π-electrons, flexibility of the chain); and (2) the properties of the solid as a whole (packing density, character of electron interaction between macromolecules). The types of electron interaction in polymers with conjugated bonds are

Card 1/3

APPROVED FOR RELEASE: 08/22/2000 CIA-RDP86-00513R001445820007-0"

"APPROVED FOR RELEASE: 08/22/2000 CIA-RDP86-00513R001445820007-0

dealt with in a communication by I. L. Kotlyarevskiy, L. B. Fisher, A. A. Dulov, A. A. Slinkin, A. M. Rubinshteyn (Ref. 6: Vysokomolek. soyed., 4, no. 1 (1962)). Where the degree of conjugation of the polymer is not too low, the electric characteristics are determined by the second factor. This is confirmed by the following: if methylene bridges, which reduce conjugation along the chain, are introduced in the macromolecule (polymer 2 in Table 1), the semiconductor properties are not destroyed but rather intensified (E_σ decreases), as the mobility of chains and the packing density increase, promoting electron interaction between the chains. With introduction of the group $-CH_2-CH_2-$ (polymer 3), the reduction of conjugation is so intense that it is no longer compensated by an increase in packing density. In all the polymers investigated, the effect of relaxation polarization (reversible decrease of electrical conductivity on application of direct current) was observed. It is due to the translation of charged sectors of the polymer chains in the electrostatic field. The temperature of this polarization (200°C) is 30-50°C lower for polymer 3, than for the others, which shows that chain mobility is highest with this polymer. Similar results were obtained for the electric properties of polyferrocenes (Ref.7: A. A. Dulov, A. A. Slinkin, A. M. Rubinshteyn, Vysokomolek. soyedin.,

APPROVED FOR RELEASE: 08/22/2000 CIA-RDP86-00513R001445820007-0"

"APPROVED FOR RELEASE: 08/22/2000 CIA-RDP86-00513R001445820007-0

4 (1962)). A. A. Berlin assisted in the present work. There are 2 figures and 1 table. The English-language references read as follows: D. D. Eley. G. D. Parfitt, Trans. Farad. Soc., 51, 1529 (1955); M. Hatano, S. Kambara, S. Okamoto, J. Polymer Sci., 51 (156), 26 (1961).

ASSOCIATION: Institut organicheskoy khimii im. N. D. Zelinskogo Akademii nauk SSSR (Institute of Organic Chemistry imeni N. D. Zelinskiy of the Academy of Sciences USSR). Institut khimicheskoy fiziki Akademii nauk SSSR (Institute of Chemical Physics of the Academy of Sciences USSR)

PRESENTED: January 5, 1962, by B. A. Kazanskiy, Academician

SUBMITTED: January 2, 1962

Legend to Table 1: (I) Structural formula of the polymer; (II) molar weight; (III) activation energy of the electrical conductivity, E_σ (120 - 250°C), ev; (IV) σ_o, $ohm^{-1} \cdot cm^{-1}$; (V) irreversible change in σ after heating; (VI) number of unpaired spins per g of N (on the basis of epr); (VII)

APPROVED FOR RELEASE: 08/22/2000 CIA-RDP86-00513R001445820007-0"

"APPROVED FOR RELEASE: 08/22/2000 CIA-RDP86-00513R001445820007-0

AKIMOV, V.M.; SLINKIN, A.A.; RUBINSHTEYN, A.M.; SHUYKIN, N.I.; KONONOV, N.F.; KASHKOVSKAYA, L.K.

Effect of spinel formation on the regenerative capacity of the Ni - A_2O_3 catalyst. Izv. AN SSSR. Otd.khim.nauk no.8:1516-1518 Ag '61. (MIRA 14:8)

1. Institut organicheskoy khimii im. N.D. Zelinskogo AN SSSR.
(Spinel) (Catalysts)

APPROVED FOR RELEASE: 08/22/2000 CIA-RDP86-00513R001445820007-0"

"APPROVED FOR RELEASE: 08/22/2000 CIA-RDP86-00513R001445820007-0

RUBINSHTEYN, A.M.; SLOVETSKAYA, K.I.; BRUYEVA, T.R.

Chemosorption of isopropyl alcohol on mixed γ Al_2O_3-based catalysts. Dokl. AN SSSR 139 no. 3:626-629 Jl '61. (MIRA 14:7)

1. Institut organicheskoy khimii im. N.D. Zelinskogo AN SSSR. Predstavleno akademikom B.A. Kazanskim.
(Isopropyl alcohol) (Aluminium oxide)

APPROVED FOR RELEASE: 08/22/2000 CIA-RDP86-00513R001445820007-0"

"APPROVED FOR RELEASE: 08/22/2000 CIA-RDP86-00513R001445820007-0

RUBINSHTEYN, A.M.; SAGALOVICH, A.V.; PRIBYTKOVA, N.A.

Decomposition of isopropanol on alumina-chromium oxide catalysts. Izv.AN SSSR.Otd.khim.nauk no.6:996-1005 Je '61. (MIRA 14:6)

1. Institut organicheskoy khimii im. N.D.Zelinskogo AN SSSR.

(Isopropyl alcohol) (Catalysts)

APPROVED FOR RELEASE: 08/22/2000 CIA-RDP86-00513R001445820007-0"

"APPROVED FOR RELEASE: 08/22/2000 CIA-RDP86-00513R001445820007-0

YAKERSON, V.I.; RUBINSHTEYN, A.M.

Kinetics and mechanism of the thermal decomposition of lithium, sodium and barium acetates. Kin. i kat. 2 no.2:172-178 Mr-Ap '61. (MIRA 14:6)

1. Institut organicheskoy khimii imeni N. D. Zelinskogo AN SSSR.
(Lithium acetate) (Sodium acetate)(Barium acetate)

APPROVED FOR RELEASE: 08/22/2000 CIA-RDP86-00513R001445820007-0"

"APPROVED FOR RELEASE: 08/22/2000 CIA-RDP86-00513R001445820007-0

RUBINSHTEYN, A.M.; AKIMOV, V.A.; SLINKIN, A.A.

X-ray and magnetochemical study of coprecipitated $NiO-Al_2O_3$ catalysts. (MIRA 14:5)
Probl. kin. i kat. 10:95 '60.

1. Institut organicheskoy khimii AN SSSR.
(Nickel oxide) (Alumina) (Catalysts)

APPROVED FOR RELEASE: 08/22/2000 CIA-RDP86-00513R001445820007-0"

"APPROVED FOR RELEASE: 08/22/2000 CIA-RDP86-00513R001445820007-0

EL'TEKHOV, Yu.A.; BRUYEVA, T.R.; RUBINSHTEYN, A.M.

Texture and adsorption properties of chromium oxide and hydroxide. Izv.AN SSSR Otd.khim.nauk no.4:560-565 Ap '61. (MIRA 14:4)

1. Institut organicheskoy khimii im. N.D.Zelinskogo AN SSSR.
(Chromium oxide) (Chromium hydroxide)

APPROVED FOR RELEASE: 08/22/2000 CIA-RDP86-00513R001445820007-0"

"APPROVED FOR RELEASE: 08/22/2000 CIA-RDP86-00513R001445820007-0

RUBINSHTEYN, A.M.; KLYACHKO-GURVICH, A.L.; AKIMOV, V.M.

Phase composition and texture of alumina-chromium oxide catalysts prepared by coprecipitation. Izv.AN SSSR.Otd.khim.nauk no.5:780-788 My '61. (MIRA 14:5)

1. Institut organicheskoy khimii im. N.D.Zelinskogo AN SSSR.
(Alumina) (Chromium oxide)

APPROVED FOR RELEASE: 08/22/2000 CIA-RDP86-00513R001445820007-0"

"APPROVED FOR RELEASE: 08/22/2000 CIA-RDP86-00513R001445820007-0

RUBINSHTEYN, A.M.; YAKERSON, V.I.

Vapor-phase catalytic ketonization of acetic acid over magnesium, zinc and cadmium oxides. Zhur.ob.khim. 30 no.10:3153-3162 O '61. (MIRA 14:4)

1. Institut organicheskoy khimii AN SSSR.
(Acetic acid)

APPROVED FOR RELEASE: 08/22/2000 CIA-RDP86-00513R001445820007-0"

"APPROVED FOR RELEASE: 08/22/2000 CIA-RDP86-00513R001445820007-0

NESMEYANOV, A.N., akademik; RUBINSHTEYN, A.M.; SLONIMSKIY, G.L.; SLINKIN, A.A.; KOCHETKOVA, N.S.; MATERIKOVA, R.B.

Magnetic susceptibility of polyalkanopolyferrocenes and polyferrocenylenes. Dokl.AN SSSR 138 no.1:125-126 My-Je '61. (MIRA 14:4)

1. Institut elementoorganicheskikh soyedineniy AN SSSR.
(Ferrocene--Magnetic properties)

APPROVED FOR RELEASE: 08/22/2000 CIA-RDP86-00513R001445820007-0"

"APPROVED FOR RELEASE: 08/22/2000 CIA-RDP86-00513R001445820007-0

NESMEYANOV, A.N., akad.; SHUBINSHTEYN, A.M.; DULOV, A.A.; SLINKIN, A.A.; RYBINSKAYA, M.I.; SLONIMSKIY, G.L.

Catalytic properties of polymers obtained from methyl β-chlororovinyl ketone. Dokl. AN SSSR 135 no.3:609-612 N '60. (MIRA 13:12)

1. Institut elementoorganicheskikh soyedineniy Akademii nauk SSSR i Institut organicheskoy khimii im. N.D. Zelinskogo Akademii nauk SSSR.

(Polymers) (Catalysts)

APPROVED FOR RELEASE: 08/22/2000 CIA-RDP86-00513R001445820007-0"

"APPROVED FOR RELEASE: 08/22/2000 CIA-RDP86-00513R001445820007-0

RUBINSHTEYN, A.M.; YAKERSON, V.I.

Ketonization of CH_3COOH over alkali metal carbonates and the decomposition of alkali metal oxalates and acetates. Kin. i kat. 2 no.1:118-126 Ja-F '61. (MIRA 14:3)

1. Institut organicheskoy khimii imeni N.D. Zelinskogo AN SSSR.
(Acetic acid) (Ketone) (Catalysts)

APPROVED FOR RELEASE: 08/22/2000 CIA-RDP86-00513R001445820007-0"

"APPROVED FOR RELEASE: 08/22/2000 CIA-RDP86-00513R001445820007-0

RUBINSHTEYN, A.M.; EL'TEKOV, Yu.A.; BRUYEVA, T.R.

Adsorption study of aluminum oxide monohydrate and γ-alumina. Izv. AN SSSR.Otd. khim. nauk no.12:2107-2117 D '60. (MIRA 13:12)

1. Institut organicheskoy khimii im.N.D.Zelinskogo AN SSSR.
(Boehmite) (Alumina)

APPROVED FOR RELEASE: 08/22/2000 CIA-RDP86-00513R001445820007-0"

"APPROVED FOR RELEASE: 08/22/2000 CIA-RDP86-00513R001445820007-0

86043

S/020/60/135/003/027/039
B016/B054

15.8114 also 1164

AUTHORS: Nesmeyanov, A. N., Academician, Rubinshteyn, A. M., Dulov, A. A., Slinkin, A. A., Rybinskaya, M. I., and Slonimskiy, G. L.

TITLE: Study of Catalytic Properties of Polymers Produced on the Basis of Methyl-β-chloro-vinyl Ketone

PERIODICAL: Doklady Akademii nauk SSSR, 1960, Vol. 135, No. 3, pp. 609 - 612

TEXT: The authors report on the continuation of their investigations of the properties of polymers produced on the basis of methyl-β-chloro-vinyl ketone (Refs. 1,2). These polymers show important electrical and magnetic properties; besides, they activate the oxidation and dehydrogenation of alcohols. In the present paper, the authors studied their physical properties, particularly their catalytic activity. Methyl-β-chloro-vinyl ketone polycondenses itself automatically when standing for 20-25 days with simultaneous separation of HCl. The formula $H(-C(COCH_3)=CH-)_nCl$ is

Card 1/4

APPROVED FOR RELEASE: 08/22/2000 CIA-RDP86-00513R001445820007-0"

"APPROVED FOR RELEASE: 08/22/2000 CIA-RDP86-00513R001445820007-0

86043

Study of Catalytic Properties of Polymers Produced on the Basis of Methyl-β-chloro-vinyl Ketone

S/020/60/135/003/027/039
B016/B054

ascribed to the resulting mixture of polymers. The best polycondensation is attained in a sealed ampoule. Otherwise, too much triacetyl benzene is formed. On prolonged heating to 400°C in vacuo (12 torr), the polymers change (with simultaneous separation of water). Their carbon content increases. Apparently, there occurs a croton polycondensation on two adjacent acetyl groups each within the chain, or a polycondensation between individual chains by acetyl groups. The authors assume that practically both processes take place, since a certain oxygen amount of the carbonyl groups is always left in the polymer. The authors studied the properties of polymers heated with and without ferric chloride at 400°C/12 torr for 6 h. Table 2 and Fig. 1 show their most important physical characteristics as well as those of activated carbon and graphite. A comparison with activated carbon (natural carbon polymer) shows that the polymers investigated have a very small specific surface (S) and a relatively large amount of unpaired spins. Fig. 1 shows data of the change in specific electrical conductivity (σ) with temperature. Therefrom, the authors calculated the activation energy of the conductivity (E_σ, Table 2). They consider it possible that these polymers are semiconductors with a

Card 2/4

APPROVED FOR RELEASE: 08/22/2000 CIA-RDP86-00513R001445820007-0"

"APPROVED FOR RELEASE: 08/22/2000 CIA-RDP86-00513R001445820007-0

86043

Study of Catalytic Properties of Polymers Produced on the Basis of Methyl-β-chloro-vinyl Ketone

S/020/60/135/003/027/039
B016/B054

forbidden-zone width of 1.6 ev in the temperature range of 160-350°C. The catalytic activity of the polymers was studied, besides that of activated carbon and graphite, by the example of oxidation of toluene with air to benzene and benzaldehyde in a continuous apparatus at 370-380°C. The authors conclude from the results that the polymers are very active in this reaction. They think it important that the polymers are very active in this of ~0.3 m^2/g delivers the same yield of oxide products as activated carbon with a surface of 600 m^2/g, i.e., the specific activity of the polymer exceeds that of activated carbon by three orders of magnitude. The authors point out that it is unclear as yet what is the reason for such an increase in activity of the polymer. They think it possible that this activity is due to an increased concentration of spins on the very small surface of the polymer. Further parallel catalytic and physical investigations are recommended by the authors. There are 1 figure, 3 tables, and 7 Soviet references.

Card 3/4

APPROVED FOR RELEASE: 08/22/2000 CIA-RDP86-00513R001445820007-0"

"APPROVED FOR RELEASE: 08/22/2000 CIA-RDP86-00513R001445820007-0

86043

Study of Catalytic Properties of Polymers Produced on the Basis of Methyl-β-chloro-vinyl Ketone

S/020/60/135/003/027/039
B016/B054

ASSOCIATION: Institut elementoorganicheskikh soyedineniy Akademii nauk SSSR (Institute of Elemental-organic Compounds of the Academy of Sciences USSR). Institut organicheskoy khimii im. N. D. Zelinskogo Akademii nauk SSSR (Institute of Organic Chemistry imeni N. D. Zelinskiy of the Academy of Sciences USSR)

SUBMITTED: August 14, 1960

Card 4/4

APPROVED FOR RELEASE: 08/22/2000 CIA-RDP86-00513R001445820007-0"

"APPROVED FOR RELEASE: 08/22/2000 CIA-RDP86-00513R001445820007-0

RUBINSHTEYN, A.L., professor, doktor tekhnicheskikh nauk

Methods of building irrigation structures on a sagging grounds.
Nauch.zap. MIIVKH 20:282-288 '58. (MIRA 13:6)
(Hydraulic engineering) (Loess)

APPROVED FOR RELEASE: 08/22/2000 CIA-RDP86-00513R001445820007-0"

"APPROVED FOR RELEASE: 08/22/2000 CIA-RDP86-00513R001445820007-0

5(2) SOV/80-32-4-42/47

AUTHORS: Rubinshteyn, A.M. and Sokol, S.K.

TITLE: The Preparation of Spectrally-Pure Palladium (Polucheniye spektral'no-chistogo palladiya

PERIODICAL: Zhurnal prikladnoy khimii, 1959, Vol 32, Nr 4, pp 930-931 (USSR)

ABSTRACT: The authors developed a method for obtaining spectrally-pure palladium metal. At first, gold traces are removed by treating the $H_2[PdCl_4]$ with hydrogen sulfide which reduces gold compounds to gold metal. Then the solution is treated with the gaseous chlorine, and a 25%-solution of NH_4Cl is added. After removal of metal chlorides the solution is treated with ammonia and subsequently with hydrochloric acid to settle out palladous ammine. The spectral investigation of palladous ammine obtained in this way did not detect any impurities. Then this compound is roasted, pressed, smelted in a high-frequency furnace and is subjected to mechanical treatment. About 200 g of spectral-pure palladium metal was prepared by this method.

Card 1/2

APPROVED FOR RELEASE: 08/22/2000 CIA-RDP86-00513R001445820007-0"

"APPROVED FOR RELEASE: 08/22/2000 CIA-RDP86-00513R001445820007-0

The Preparation of Spectrally-Pure Palladium SOV/80-32-4-42/47

ASSOCIATION: Institut obshchey i neorganicheskoy khimii imeni P.S. Kurnakova AN SSSR (Institute of General and Inorganic Chemistry imeni P.S. Kurnakov of the AS USSR)

SUBMITTED: November 19, 1958

Card 2/2

APPROVED FOR RELEASE: 08/22/2000 CIA-RDP86-00513R001445820007-0"

"APPROVED FOR RELEASE: 08/22/2000 CIA-RDP86-00513R001445820007-0

SOV/76-33-2-11/45

5(4)

AUTHORS: Rubinshteyn, A. M., El'tekov, Yu. A., Slovetskaya, K. I.

TITLE: The Porous Structure and Specific Surface of $NiO-Al_2O_3$ Catalysts and the Variation of These Properties With Changes in Composition and Thermal Treatment (Poristaya struktura i udel'naya poverkhnost' $NiO-Al_2O_3$-katalizatorov i ikh izmeneniye pri variatsii sostava i usloviy termicheskoy obrabotki)

PERIODICAL: Zhurnal fizicheskoy khimii, 1959, Vol 33, Nr 2, pp 310 - 317 (USSR)

ABSTRACT: The authors conducted thorough investigations on the $NiO-Al_2O_3$ system using the adsorption method as well as parallel investigations on the activity and selectivity of this system in its catalytic effect upon the iso-propanol decomposition (Ref 1), the phase composition, and X-ray structure of this system (Ref 2), and its magnetic properties (Ref 3). Extensive tests were carried out because this system is a mixed catalyst, since Al_2O_3 dehydrates and NiO dehydrogenates, and also because contradictory data on this system are given

Card 1/3

APPROVED FOR RELEASE: 08/22/2000 CIA-RDP86-00513R001445820007-0"

"APPROVED FOR RELEASE: 08/22/2000 CIA-RDP86-00513R001445820007-0

in the publications (Refs 1-7). The thermal treatment of the catalyst took place at 400,600,750, and 900°C, while the granulation varied between 1.1 and 1.3 mm. The adsorption experiments were carried out using a vacuum apparatus containing balances with quartz spirals of the Mak-Ben and Bakr type. The vapor pressure was determined using a U-manometer and a MakLeod manometer, while the catalyst was maintained at a definite temperature by using a Hepler (Gepler) ultra-thermostat. The adsorption isotherms at 20° C(Figs 1-4) are S-shaped and possess a hysteresis loop. The values of the specific surface (s) and the porous volume (V_s) were calculated from the isotherms using the BET method. The Kelvin equation was used to calculate the porous diameter (d) and then the particle dimensions (D)(Table). The experimental results obtained show that the strongest change in the above mentioned properties is observed with a NiO-content between 5 and 15-20 mole%. A definite relationship was shown between the catalytic properties of the catalyst

APPROVED FOR RELEASE: 08/22/2000 CIA-RDP86-00513R001445820007-0"

"APPROVED FOR RELEASE: 08/22/2000 CIA-RDP86-00513R001445820007-0

The Porous Structure and Specific Surface of $NiO-Al_2O_3$ Catalysts and the Variation of These Properties With Changes in Composition and Thermal Treatment SOV/76-33-2-11/45

and the characteristics determined by the adsorption method. The maximal values for s, V_s, d, and D which were obtained with NiO contents up to 20 mole% are explained by crystal structure properties in terms of the effect of the NiO and Al_2O_3 components upon one another. There are 4 figures, 2 tables, and 10 references, 7 of which are Soviet.

ASSOCIATION: Akademiya nauk SSSR, Institut organicheskoy khimii, Moskva (Academy of Sciences, USSR, Institute of Organic Chemistry, Moscow)

SUBMITTED: July 4, 1957

Card 3/3

APPROVED FOR RELEASE: 08/22/2000 CIA-RDP86-00513R001445820007-0"

"APPROVED FOR RELEASE: 08/22/2000 CIA-RDP86-00513R001445820007-0

5(2,3)

AUTHORS: Rubinshteyn, A. M., Afanas'yev, V. A., Akimov, V. M., Pribytkova, N. A., Slovetskaya, K. I.

SOV/20-124-5-32/62

TITLE: The Influence of the Composition and of the Conditions of the Thermal Treatment on the Structure and Catalytic Activity of Al_2O_3-ZrO_2 Catalysts (Vliyaniye sostava i usloviy termicheskoy obrabotki na strukturu i kataliticheskuyu aktivnost' Al_2O_3-ZrO_2-katalizatorov)

PERIODICAL: Doklady Akademii nauk SSSR, 1959, Vol 124, Nr 5, pp 1076-1079 (USSR)

ABSTRACT: The authors are not aware of publications on results of systematic changes of the ratio of components or of the conditions of the thermal treatment nor on the determination of the specific activity of the catalysts mentioned in the title. They have investigated the decomposition of absolute isopropyl alcohol on such catalysts which had been produced by precipitation with 10 % ammonia from 10 % solutions of Al- and Zr-nitrate at room temperature and pH 8.7-9.5. During the calcining of samples of the catalysts at 400, 600, and 750° it was found that the dehydration of the hydroxide is already

Card 1/4

APPROVED FOR RELEASE: 08/22/2000 CIA-RDP86-00513R001445820007-0"

"APPROVED FOR RELEASE: 08/22/2000 CIA-RDP86-00513R001445820007-0

sufficient at 400°. The catalysts consist of oxides. The additional removal of water at 750° was only as much as 2 % which had still remained adsorbed. The values of the velocity constant K of the reaction were calculated from the equation $K = \frac{Nm}{M - m/2}$ (Ref 5) and the specific activity A_{sp} (Table 1) was calculated from K and S (specific surface area). Figure 1 shows the calculated S values (Ref 6). This indicates that the catalysts had a very highly developed surface and a fairly high thermal stability. This expresses the mutual protection afforded by the components before crystallization (sintering). Figure 2 shows the change in the porous structure of the catalysts during calcining. Said catalysts were already active at 230° whereas ZrO_2 alone reaches the same activity only at 300°. Table 1 states the degrees of conversion between 245 and 260°. Only a dehydration of i-C_3H_7OH took place on all binary catalysts. The increase in activity was clearly due in this case to high S values of the binary catalysts compared to

APPROVED FOR RELEASE: 08/22/2000 CIA-RDP86-00513R001445820007-0"

"APPROVED FOR RELEASE: 08/22/2000 CIA-RDP86-00513R001445820007-0

Al_2O_3. It can be concluded that the addition of ZrO_2 does not result in an activation of Al_2O_3 under the conditions given. Figure 3 shows a diagram - the variation of A_{sp} with the composition and the calcining temperature of the catalysts (1-750°, 2-600°, 3-400°) - for experiments carried out at 260°. The fact that A_{sp} is constant throughout a wide range of ZrO_2 concentrations seems to indicate that the reaction is taking place in this case only on Al_2O_3 whereas ZrO_2 behaves only as an inert support. All this is in good agreement with the results of the X-ray analysis (made with the assistance of L. D. Kretalova). It has been found that in co-precipitated catalysts ZrO_2 and Al_2O_3 are present as separate phases rather than solid solutions (in agreement with reference 4). Neither the increase of the temperature at which the experiment was carried out (up to 320°), nor of the volume velocity (up to

APPROVED FOR RELEASE: 08/22/2000 CIA-RDP86-00513R001445820007-0"

"APPROVED FOR RELEASE: 08/22/2000 CIA-RDP86-00513R001445820007-0

The Influence of the Composition and of the Conditions of the Thermal Treatment on the Structure and Catalytic Activity of Al_2O_3-ZrO_2 Catalysts SOV/20-124-5-32/62

12h^{-1}) have destroyed, on the whole, the picture of figure 3 nor affected the conclusions derived therefrom in table 1. This relates to the catalysts calcined at 600°. The total activity (Table 1) and A_{sp} increase with the calcining temperature between 400 and 600° (Fig 3) probably because the finest pores are destroyed, which are difficultly accessible to the alcohol molecules. There are 3 figures, 1 table, and 6 references, 4 of which are Soviet.

ASSOCIATION: Institut organicheskoy khimii im. N. D. Zelinskogo Akademii nauk SSSR (Institute of Organic Chemistry imeni N. D. Zelinskiy of the Academy of Sciences, USSR)

PRESENTED: October 17, 1958, by A. A. Balandin, Academician

SUBMITTED: April 19, 1958

Card 4/4

APPROVED FOR RELEASE: 08/22/2000 CIA-RDP86-00513R001445820007-0"

"APPROVED FOR RELEASE: 08/22/2000 CIA-RDP86-00513R001445820007-0

5.1190

80097
S/020/60/131/06/44/071
B004/B007

AUTHORS: Rubinshteyn, A. M., Slinkin, A. A.

TITLE: The Magnetic Properties of Cr_2O_3-Al_2O_3 Catalysts

PERIODICAL: Doklady Akademii nauk SSSR, 1960, Vol. 131, No. 6, pp. 1386 - 1389

TEXT: After giving a short survey of publications (Refs. 1-5) concerning the measurement of magnetic susceptibility χ and the Weiss constant Δ on catalysts produced by the saturation of Al_2O_3 with chromium compounds, the authors describe their method. They produced the catalysts by the joint precipitation of aluminum- and chromium hydroxide from mixtures of 10% solutions of the nitrates with 10% NH_4OH. The Cr_2O_3 content was varied between 0 and 100 wt %. By means of thermal treatment at 450 or 600° two series of catalysts were obtained, the activity of which was investigated by means of the catalytic decomposition of isopropyl alcohol. In Fig. 1 the change of $\chi_{Cr} \cdot 10^6$ in dependence on the concentration of Cr_2O_3 in catalysts annealed at 450° before and after catalytic reaction is shown. For the same series of catalysts Fig. 2 shows the dependence of the magnetic

Card 1/3

APPROVED FOR RELEASE: 08/22/2000 CIA-RDP86-00513R001445820007-0"

"APPROVED FOR RELEASE: 08/22/2000 CIA-RDP86-00513R001445820007-0

moment μ and of the Weiss constant Δ on the composition of the catalyst and upon the fact whether catalysis was carried out by means of this catalyst or not. From μ the Cr^{6+}-ion content before and after catalysis was calculated (Fig. 3). For the series annealed at 600° similar results were obtained, but the Cr^{6+}-ion content was lower by about 66%. The authors discuss the experimental data and arrive at the following conclusions: Within the range between 0 and 14% Cr_2O_3 there exists a solid solution of Cr_2O_3 in Al_2O_3, which becomes ordered with increasing heating temperature, so that Δ is decreased. Between 14 and 33% Cr_2O_3 there exist several phases with different chromium oxide content. According to the Cr_2O_3-content of these phases, Δ increases or decreases in them. These two processes may lead to a constant Δ. Between 60 and 93% Cr_2O_3 free Cr_2O_3 occurs (increase of χ), and besides a solid solution of Al_2O_3 occurs in Cr_2O_3, which explains the anti-ferromagnetism observed. Whereas the Cr^{6+}-ions on the surface are easily reduced by catalysis, this is not the case with the much greater fraction of Cr^{6+}-ions within the crystal. This explains the small difference in

APPROVED FOR RELEASE: 08/22/2000 CIA-RDP86-00513R001445820007-0"

"APPROVED FOR RELEASE: 08/22/2000 CIA-RDP86-00513R001445820007-0

80097

The Magnetic Properties of Cr_2O_3-Al_2O_3 Catalysts S/020/60/131/06/44/071
B004/B007

the magnetic properties of catalysts with more than 60% of Cr_2O_3 before and after the catalysis. The authors further mention an investigation carried out together with M. I. Rozengart concerning Cr_2O_3-SiO_2 catalysts, which will be the subject of a further report. There are 3 figures and 5 references.

ASSOCIATION: Institut organicheskoy khimii im. N. D. Zelinskogo Akademii nauk SSSR (Institute of Organic Chemistry imeni N. D. Zelinskiy of the Academy of Sciences, USSR)

PRESENTED: January 5, 1959, by B. A. Kazanskiy, Academician

SUBMITTED: January 2, 1959

Card 3/3

APPROVED FOR RELEASE: 08/22/2000 CIA-RDP86-00513R001445820007-0"

"APPROVED FOR RELEASE: 08/22/2000 CIA-RDP86-00513R001445820007-0

GONIKBERG, Mark Gertsovich; KAZANSKIY, B.A., akademik, otv.red.; RUBINSHTEYN, A.M., prof., otv.red.; BANKVITSER, A.L., red. izd-va; MAKUNI, Ye.V., tekhn.red.

[Chemical equilibrium and rates of reactions at high pressures] Khimicheskoe ravnovesie i skorost' reaktsii pri vysokikh davleniiakh. Izd.2., perer. i dop. Moskva, Izd-vo Akad.nauk SSSR, 1960. 271 p. (MIRA 13:7)

(Chemical equilibrium) (Chemical reaction, Rate of)
(High pressure research)

APPROVED FOR RELEASE: 08/22/2000 CIA-RDP86-00513R001445820007-0"

"APPROVED FOR RELEASE: 08/22/2000 CIA-RDP86-00513R001445820007-0

Rubinshteyn, A. M.

PHASE I BOOK EXPLOITATION SOV/3921

Akademiya nauk SSSR. Institut fizicheskoy khimii

Problemy kinetiki i kataliza. [t] 10: Fizika i fiziko-khimiya kataliza (Problems of Kinetics and Catalysis. [vol.] 10: Physics and Physico-Chemistry of Catalysis) Moscow, Izd-vo AN SSSR, 1960. 461 p. Errata slip inserted. 2,600 copies printed.

Eds.: S.Z. Roginskiy, Corresponding Member of the Academy of Sciences USSR, and O.V. Krylov, Candidate of Chemistry; Ed. of Publishing House: A.L. Benkriteer; Tech. Ed.: G.A. Astaf'yeva.

PURPOSE: This collection of articles is addressed to physicists and chemists and to the community of scientists in general interested in recent research on the physics and physical chemistry of catalysis.

COVERAGE: The articles in this collection were read at the conference on the Physics and Physical Chemistry of Catalysis organized by the Otdel khimicheskikh nauk AN SSSR (Section of Chemical Sciences, Academy of Sciences USSR) and by the Academic Council on the problem of "the scientific bases for the selection of catalysts." The Conference was held at the Institut fizicheskoy khimii AN SSSR (Institute of Physical Chemistry of the AS USSR) in Moscow, March 20-23, 1958. Of the great volume of material presented at the conference, only papers not published elsewhere were included in this collection.

Koutecky, J. [Czechoslovak Academy of Science, Institute of Physical Chemistry, Prague]. On the Theory of Chemisorption and of Surface States 34

Bielański, Adam, J. Deren, and J. Haber [Mining and Metallurgical Academy, Cracow]. Investigation of Electric Conductivity of Semiconductor Catalysts 37

Kogan, Sh. M., and V.B. Sandomirskiy [Department of Physics of Moscow State University, Institute of Physical Chemistry AS USSR]. Isotherms and Adsorption Heats in the Electron Theory of Chemical Adsorption 58

Vol'kenshteyn, F.F., and V.B. Sandomirskiy [Institute of Physical Chemistry AS USSR]. Effect of an External Electric Field on the Adsorptive Capacity of a Semiconductor 61

Kogan, Sh. M., and V.B. Sandomirskiy [Institute of Physical Chemistry AS USSR, Department of Physics of Moscow State University]. Measurement of Contact Potential of a Semiconductor as a Method of Detecting the Various Charge States of Particles Adsorbed on it 62

Popovskiy, V.V., and G.K. Boreskov [Moskovskiy khimiko-tekhnologicheskiy institut imeni D.I. Mendeleyeva (Moscow Chemical Technology Institute imeni D.I. Mendeleyev)]. Catalytic Activity of the Metal Oxides of the 4th Period in Relation to the Oxidation Reaction of Hydrogen 67

Keyyer, N.P. [Institute of Physical Chemistry AS USSR]. Nature of the Heterogeneity of the Active Surface of Semiconductor Contacts 73

Chiginkova, G.I., and N.P. Keyyer [Institute of Physical Chemistry AS USSR]. Regularities in the Mechanism of Chemical Adsorption and Catalysis over Solid Solutions of Zinc Oxide 77

Kuteeva, L.N., and N.P. Keyyer [Institute of Physical Chemistry AS USSR]. Investigation of Chemical Adsorption of Gases on Nickel Oxide and Its Solid Solutions 82

Korsunovskiy, G.A. Mechanism of Electron Exchange in the Photooxidation of Water Over Semiconductors 87

Yenikeyev, N.M. [Institute of Physical Chemistry AS USSR]. Study of the Surface Charge of Oxide Semiconductor Catalysts During Adsorption 88

Ivanovskiy, F.O., G.Ye. Braude, T.A. Semenova, and E.G. Lyudkovskaya [Gosudarstvennyy institut azotnoy promyshlennosti (State Institute of the Nitrogen Industry)]. Investigation of Zinc, Chromium, and Copper Oxide Base Catalyst for the Conversion of Carbon Monoxide 90

Rubinshteyn, A.M., V.A. Akimov, and A.A. Slinkin [Institute of Organic Chemistry of the AS USSR]. Roentgenographic and Magnetochemical Investigation of Simultaneously Precipated NiO - Al_2O_3 Catalysts 95

Goryunova, N.A. [Physicotechnical Institute of the AS USSR]. Type of Bond and Properties of Semiconductors of the Crystallochemical Group, Diamond - Zinc Blende - Wurtzite 96

APPROVED FOR RELEASE: 08/22/2000 CIA-RDP86-00513R001445820007-0"

"APPROVED FOR RELEASE: 08/22/2000 CIA-RDP86-00513R001445820007-0

S/020/60/132/02/34/067
B011/B002

AUTHORS: Rozengart, M. I., Slinkin, A. A., Rubinshteyn, A. M.

TITLE: Structure and Catalytic Properties of Chromium-silica Gel Catalysts

PERIODICAL: Doklady Akademii nauk SSSR, 1960, Vol. 132, No. 2, pp. 367-370

TEXT: The authors found out that the chromium-silica gel catalyst first treated with ethyl alcohol and then heated in the air current, soon is poisoned during the aromatization (dehydrocyclization) of n-heptane by coke deposition. This catalyst had antiferromagnetic properties and its radiograph clearly showed lines of Cr_2O_3. The same catalyst but heated in the hydrogen current (instead of air), remained unpoisoned during 2 hours of the experiment, and proved to be paramagnetical, and radiographically amorphous. Fig. 1 gives an adsorption scheme of a paraffin hydrocarbon on crystalline Cr_2O_3. A new molecular C-C bond develops besides the aromatization. This causes the development of molecule chains and networks of the polymer on the surface of the catalyst. They are transformed into coke. The catalytic experiments were conducted according to the methods of Ref. 7. Fig. 2 shows the changes of the refractive index of the

Card 1/3

APPROVED FOR RELEASE: 08/22/2000 CIA-RDP86-00513R001445820007-0"

"APPROVED FOR RELEASE: 08/22/2000 CIA-RDP86-00513R001445820007-0

catalysates during the experiment. Table 1 illustrates the aromatization of n-heptane and cyclohexane under atmospheric pressure. Hence it is clear that the above-mentioned differences in the behavior of catalysts are not due to admixtures of other metal oxides in silica gel. Table 2 gives data on the phase composition and magnetic properties of the catalysts I-IX investigated by the authors. Hence, these catalysts can be classified into two groups: 1) radiographically amorphous, paramagnetic - samples II. and III. The temperature dependence of their susceptibility follows the law of Curie-Weiss. This allowed the calculation of the magnetic moment (3.2μ B). 2) Samples IV-IX are antiferromagnetic. All their radiographic lines were identified as lines of Cr_2O_3. Sample VIII produced from sample I by heating in the hydrogen current without alcohol treatment, thus contained crystalline Cr_2O_3, like samples V. and VI. Sample III however, which was produced by heating sample II in the H_2 current, proved to be radiographically amorphous, and paramagnetic. The authors assume that CrO_3 in the first case is immediately reduced into Cr_2O_3, and by alcohol treatment in the second case develops some intermediate compound of chromium not affected by air. This intermediate compound however, produces the crystalline Cr_2O_3 when heated in the air current. This intermediate compound possibly is a chromium silicate developing during the alcohol

APPROVED FOR RELEASE: 08/22/2000 CIA-RDP86-00513R001445820007-0"

"APPROVED FOR RELEASE: 08/22/2000 CIA-RDP86-00513R001445820007-0

Structure and Catalytic Properties of Chromium-silica Gel Catalysts

S/020/60/132/02/34/067
B011/B002

treatment of the catalyst. It may consist of non-stoichiometric chromium oxides developing during the reduction of CrO_3 by alcohol, in the absence of other mineral acids. There are 2 figures, 2 tables, and 7 references, 4 of which are Soviet.

ASSOCIATION: Institut organicheskoy khimii im. N. D. Zelinskogo Akademii nauk SSSR (Institute of Organic Chemistry imeni N. D. Zelinskiy of the Academy of Sciences, USSR)

PRESENTED: January 23, 1960, by B. A. Kazanskiy, Academician

SUBMITTED: January 19, 1960

Card 3/3

APPROVED FOR RELEASE: 08/22/2000 CIA-RDP86-00513R001445820007-0"

"APPROVED FOR RELEASE: 08/22/2000 CIA-RDP86-00513R001445820007-0

S/062/60/000/012/003/020
B013/B055

AUTHORS: Rubinshteyn, A. M., El'tekov, Yu. A., Bruyeva, T. R.

TITLE: Studies on Adsorption by Aluminum Oxide Monohydrate and γ-Aluminum Oxide

PERIODICAL: Izvestiya Akademii nauk SSSR. Otdeleniye khimicheskikh nauk, 1960, No. 12, pp.2107-2117

TEXT: The present paper is a complex study on the adsorptive properties of aluminum oxide monohydrate (boehmite) and its dehydration products with respect to Ar, N_2, n-C_6H_{14}, C_6H_6, and CH_3OH. The adsorption of argon and nitrogen was studied at -195°C and that of n-hexane and benzene at 20°C using the same samples (1 to 5). Aluminum hydroxide was used as initial compound. It was precipitated from a 10% solution of $Al(NO_3)_3$ with a 10% NH_4OH solution and then treated according to Ref. 1. The experiments were performed in a soldered vacuum apparatus (Fig. 1), consisting of 3 main parts: 1) the vacuum device, 2) a device containing a vacuum microburette and 3) the gas-cleaning system. This apparatus made possible, firstly, the

Card 1/3

APPROVED FOR RELEASE: 08/22/2000 CIA-RDP86-00513R001445820007-0"

"APPROVED FOR RELEASE: 08/22/2000 CIA-RDP86-00513R001445820007-0

investigation of gas adsorption by the volumetric method and vapor adsorption by means of the vacuum microburette using one and the same catalyst and, secondly, the simultaneous measurement of two samples. The experimental adsorption isotherms of nitrogen vapors are shown in Fig. 2a and those of argon in Fig. 2b. The specific surfaces of the samples investigated were calculated by the simpler B-point method and the standard Brunauer-Emmett-Teller method (Fig. 3, Table 1). The results are in satisfactory agreement. The measurements carried out in this study, together with data published in Ref. 1 show that sorbed argon (ω_o = 15.4 A^2) and nitrogen (ω_o = 16.2 A^2) occupy corresponding surface areas. The experimental and calculated data obtained in adsorption studies of n-hexane and benzene are shown in Figs. 4-7 and Tables 2 and 3. From these it can be seen that the calculated specific surfaces of the samples investigated are somewhat fortuitous and characterized by abnormally high values of S. This anomaly is due to the increased sorptive energy of the developed texture of the system Al_2O_3-H_2O and its dependence on the H_2O content. The effect of dehydration of Al_2O_3 on the adsorption was studied and the absolute adsorption isotherms of n-C_6H_{14} and C_6H_6 (Fig. 8), nitrogen (Fig. 9), and argon (Fig. 10) were

APPROVED FOR RELEASE: 08/22/2000 CIA-RDP86-00513R001445820007-0"

"APPROVED FOR RELEASE: 08/22/2000 CIA-RDP86-00513R001445820007-0

calculated. The degree of dehydration inside a water content of 11.6 to 4.0% by weight had no influence on the adsorption of n-C_6H_{14}, whereas it noticeably increased the adsorption of C_6H_6, nitrogen, and even that of argon, in the initial monomolecular range. The increased adsorption of nitrogen in the initial range, as compared to argon, may be explained by an additional interaction energy of the nitrogen quadrupole with the electric field of γ-Al_2O_3. The quadrupole moment of argon is zero. The adsorbability of the investigated vapors on aluminum hydroxide (boehmite) is low because it has a looser lattice than γ-Al_2O_3. The crystal lattice of boehmite contains more excited hydroxyl groups owing to their close mutual neighborhood than γ-Al_2O_3 which is built up of closely packed and entirely or partly ionized oxygen- and aluminum atoms. There are 10 figures, 3 tables, and 20 references: 8 Soviet, 5 US, and 3 German.

ASSOCIATION: Institut organicheskoy khimii im. N. D. Zelinskogo Akademii nauk SSSR (Institute of Organic Chemistry imeni N. D. Zelinskiy of the Academy of Sciences USSR)

SUBMITTED: July 10, 1959

APPROVED FOR RELEASE: 08/22/2000 CIA-RDP86-00513R001445820007-0"

"APPROVED FOR RELEASE: 08/22/2000 CIA-RDP86-00513R001445820007-0

5.1190

78060
SOV/62-60-1-6/37

AUTHORS: Rubinshteyn, A. M., Slovetskaya, K. I., Akimov, V. M., Pribytkova, N. A., Kretalova, L. D.

TITLE: Polymorphism and Catalytic Properties of Al_2O_3

PERIODICAL: Izvestiya Akademii nauk SSSR. Otdeleniye khimicheskikh nauk, 1960, Nr 1, pp 31-38 (USSR)

ABSTRACT: Polymorphic modifications of Al_2O_3 and their catalytic properties were studied. Preparation of γ-, α-, χ-, $\varkappa$-, Θ-, δ-Al_2O_3 modifications is given. It was shown that formation of different Al_2O_3 modifications depends not only on the thermal conditions of dehydration, but also on the structure of the starting aluminum hydroxide. The following three series of conversions are given:

Card 1/5

APPROVED FOR RELEASE: 08/22/2000 CIA-RDP86-00513R001445820007-0"

"APPROVED FOR RELEASE: 08/22/2000 CIA-RDP86-00513R001445820007-0

Polymorphism and Catalytic Properties of Al_2O_3

78060
SOV/62-60-1-6/37

(a) Hydrargillite → $\chi(k', \varepsilon)$-Al_2O_3 → k-Al_2O_3 → α-Al_2O_3

(b) Bayerite
(c) Boehmite } → $\gamma(\eta)$-Al_2O_3 → δ-Al_2O_3 → θ-Al_2O_3 → α-Al_2O_3

(d) diaspore → α-Al_2O_3

General and specific catalytic activity of the above modifications was determined by using them in catalytic dehydration of i-C_3H_7OH. The general catalytic activity of the modifications changes with the change of specific surface. According to their specific catalytic activity the modifications (containing the same amount of residual water per 1 m^2 of surface) form the following series: $\Theta > \chi > \varkappa > \gamma (< \delta) \gg \alpha$. Activity of some modifications prepared at high temperatures is higher than that of modifications prepared at lower temperatures. X-ray studies show that in the catalytic experiments the modifications

Card 2/3

APPROVED FOR RELEASE: 08/22/2000 CIA-RDP86-00513R001445820007-0"

"APPROVED FOR RELEASE: 08/22/2000 CIA-RDP86-00513R001445820007-0

Polymorphism and Catalytic Properties of Al_2O_3

78060
SOV/62-60-1-6/37

retain their structural characteristics. There are 2 tables; 4 figures; and 17 references, 6 U.S., 1 U.K., 1 French, 5 German, 4 Soviet. The 5 most recent U.S. and U.K. references are: H. C. Stumpf, A. S. Russell, I. W. Newson, C. M. Tucker, Industr. and Engng. Chem. 42, 1938 (1950); J. F. Brown, D. Clark, W. Elliot, J. Chem. Soc., 84 (1953); M. K. Day, V. F. Hill, J. Phys. Chem. 57, 946 (1953); A. S. Russell, C. N. Cochran, Industr. and Engng. Chem. 42, 1336 (1950); W. Brey, R. Krieger, J. Am. Chem. Soc., 71, 3637 (1949).

ASSOCIATION: N. D. Zelinskiy Institute of Organic Chemistry Academy of Sciences USSR (Institut organicheskoy khimii imeni N. D. Zelinskogo Akademii nauk SSSR)

SUBMITTED: May 5, 1958

Card 3/3

APPROVED FOR RELEASE: 08/22/2000 CIA-RDP86-00513R001445820007-0"

"APPROVED FOR RELEASE: 08/22/2000 CIA-RDP86-00513R001445820007-0

86-58-5-15/38

AUTHOR: Lugarev, Ye. S., Engr Lt Col, and Rubinshteyn, A. M., Engr Maj

TITLE: Possible Types of Attacks Against Tactical Ground Targets (Vozmozhnosti atak po nazemnym takticheskim tselyam)

PERIODICAL: Vestnik vozdushnogo flota, 1958, Nr 5, pp 30-33 (USSR)

ABSTRACT: The authors discuss the possibility of attacks by fighter airplanes against tactical ground targets. Although an attack is most advantageous, it cannot always be carried out, because a ground target can be attacked successfully only at a distance from it such that the pilot is able to identify the target, to make his decision for the attack, and to maneuver his aircraft into a position suitable for firing his cannons or rockets (bombs). The authors then describe what should be the required distance, altitude, speed, and dive angle at which to attack a target. There are 3 diagrams and 1 graph.

AVAILABLE: Library of Congress

1. Warfare - Tactics 2. Air force operations - USSR

Card 1/1

APPROVED FOR RELEASE: 08/22/2000 CIA-RDP86-00513R001445820007-0"

"APPROVED FOR RELEASE: 08/22/2000 CIA-RDP86-00513R001445820007-0

CHERNYSHEV, V.N., podpolkovnik, voyennyy letchik pervogo klassa;
RUBINSHTEYN, A.M., inzh.-mayor

How to determine an airplane's ceiling. Vest.Vozd.Fl. 41 no.2:85-87 F '59. (MIRA 12:4)

(Airplanes)

APPROVED FOR RELEASE: 08/22/2000 CIA-RDP86-00513R001445820007-0"

"APPROVED FOR RELEASE: 08/22/2000 CIA-RDP86-00513R001445820007-0

TERESHIN, G.S.; RUBINSHTEYN, A.R.; TANANAYEV, I.V.

Yttrium complex formation with methylthymol blue. Zhur. anal. khim. 20 no.10:1082-1092 '65. (MIRA 18:11)

1. Institut obshchey i neorganicheskoy khimii im. N.S. Kurnakova AN SSSR, Moskva.

APPROVED FOR RELEASE: 08/22/2000 CIA-RDP86-00513R001445820007-0"

"APPROVED FOR RELEASE: 08/22/2000 CIA-RDP86-00513R001445820007-0

S/020/62/144/003/023/030
B124/B101

AUTHORS: Paushkin, Ya. M., Yuzvyak, A. G., and Rubinshteyn, A. T.

TITLE: Synthesis of dimethyl cyclohexadiene and vinyl cyclohexene by dimerization of butadiene

PERIODICAL: Akademiya nauk SSSR. Doklady, v. 144, no. 3, 1962, 581-584

TEXT: Optimum conditions for the cyclopolymerization of butadiene to cyclic dimers of various compositions were studied in a stainless-steel reactor with activated-carbon packing. The polymer obtained was subjected to fractional distillation, and cuts with boiling-point intervals from 5 to 7°C were collected and examined. Maximum yields of dimeric fractions were obtained at 400-420°C, with a feeding velocity of 11 hrs^{-1}, and 3 atm pressure, corresponding to 10% 1,3-dimethyl cyclohexadiene and 45% vinyl cyclohexene. The yield of dimers decreases with increasing reaction temperature, and increases with increasing pressure. In addition to the dimethyl cyclohexadienes and vinyl cyclohexene, long-chain aromatic compounds and both cyclooctadiene- and cyclodecene-type hydrocarbons were shown to be present. The thermodynamics of the reactions:

APPROVED FOR RELEASE: 08/22/2000 CIA-RDP86-00513R001445820007-0"

"APPROVED FOR RELEASE: 08/22/2000 CIA-RDP86-00513R001445820007-0

divinyl $\overset{K_p}{\rightleftharpoons}$ vinyl cyclohexene (I); divinyl $\overset{K'_p}{\rightleftharpoons}$ vinyl cyclohexene (I); $\overset{K_p^2}{\rightleftharpoons}$ dimethyl cyclohexadiene (II) were calculated in the gas phase from the equations (1) $K_p = p_{vin}/p_{div}^2$ for reaction I, and both (2) $K_p^{(1)} = p_{vin}/p_{div}^2$ and (3) $K_p^{(2)} = p_{dimethyl}/p_{div}^2$ for reaction (II), where K_p, $K_p^{(1)}$ and $K_p^{(2)}$ are equilibrium constants of the two reactions at constant pressure, and p_{vin}, p_{div}, and $p_{dimethyl}$ are the equilibrium partial pressures of vinyl cyclohexene, divinyl, and dimethyl cyclohexadiene, respectively. If $z \cdot 100$ is the percentage of vinyl cyclohexadiene in reaction, I, $x \cdot 100$ that in reaction II, $y \cdot 100$ the percentage of dimethyl cyclohexadiene in reaction II, and if P_o is the pressure required, we have

(1") $K_p = (1/2)z\left[1 - (1/2)z\right] / (1-z)^2 \cdot P_o$ for reaction I,

(2") $K_p^{(1)} = x\left[1 - (1/2)x - (1/2)y\right] / (1 - x - y)^2 \cdot P_o$ and

(3") $K_p^{(2)} = y\left[1 - (1/2)x - (1/2)y\right] / (1 - x - y)^2 \cdot P_o$ for reaction II. At

APPROVED FOR RELEASE: 08/22/2000 CIA-RDP86-00513R001445820007-0"

"APPROVED FOR RELEASE: 08/22/2000 CIA-RDP86-00513R001445820007-0

the same time, $-RT \ln K_p = \Delta Z^o$; $\Delta Z^o = \Delta H^o_{298.16} - T\Delta S^o_{298.16}$; $\Delta H^o_{298.16} = \Delta H^o_{form.298.16C_8} - 2\Delta H^o_{form.298.16C_4}$; $\Delta S^o_{298.16} = S^o_{298.16C_8} - 2S^o_{296.16C_4}$, where ΔZ^o is the thermodynamic potential, $\Delta H^o_{298.16C_4}$ = heat of formation of divinyl, $S^o_{298.16C_4}$ the entropy of divinyl, and $S^o_{298.16C_8}$ = entropy of the corresponding dimer. There are 3 figures and 3 tables. The English-language reference is: E. Gil. Av. J. Shabtal. F. Steckel, Ind. Eng. Chem. 52, 31 (1960). [Abstracter's note: p.139 given in the original, is wrong.]

ASSOCIATION: Institut neftekhimicheskoy i gazovoy promyshlennosti im. I. M. Gubkina (Institute of Petrochemical and Gas Industry imeni I. M. Gubkin)

PRESENTED: December 30, 1961, by A. V. Topchiyev, Academician

SUBMITTED: December 30, 1961

APPROVED FOR RELEASE: 08/22/2000 CIA-RDP86-00513R001445820007-0"

"APPROVED FOR RELEASE: 08/22/2000 CIA-RDP86-00513R001445820007-0

L 36853-66 EWT(1)

ACC NR: AP6005513 (A) SOURCE CODE: UR/0256/66/000/001/0072/0075

AUTHOR: Rubinshteyn, A. Ya. (Captain)

ORG: none

17
B

TITLE: A phantastron frequency divider

SOURCE: Vestnik protivovozdushnoy oborony, no. 1, 1966, 72-75

TOPIC TAGS: frequency divider, phantastron

ABSTRACT: The use of phantastron generators as pulse frequency dividers is described. The author notes the absence of a detailed description of the principle of operation of phantastron frequency dividers in the literature and cites this as a problem frequently encountered by radar officers. In this mode of operation, phantastrons are capable of generating greater division factors than multivibrators and blocking oscillators and are less sensitive to changes in supply voltages and parameters of the input pulses. Such stability is possible because a linear, rather than an exponential voltage source is used in a phantastron. Figure 1 shows a frequency divider based on a conventional, cathode-coupled phantastron, the function of which depends on the current distribution between the plate and the screen grid. Diode V_1 passes only negative pulses into the divider. Initially, the plate potential of the V_2 cutoff tube is fixed by the R_1, R_2, R_3 voltage divider and the resistance of the open diode is fixed

Card 1/3

APPROVED FOR RELEASE: 08/22/2000 CIA-RDP86-00513R001445820007-0"

"APPROVED FOR RELEASE: 08/22/2000 CIA-RDP86-00513R001445820007-0

L 36853-66

ACC NR: AP6005513

6.

at a level less than the supply voltage. Since in this state the control grid is positive with respect to the cathode, there is heavy current flow through the screen

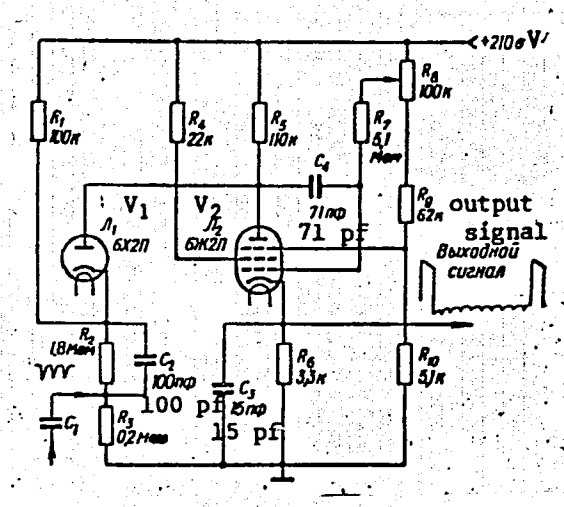

Fig. 1.

grid. Capacitor C_4 is charged by the initial plate voltage prior to the arrival of the first input pulse. The division factor is determined by the time constant of the network C_4, R_7 and R_8. As soon as a negative input pulse is fed to the control grid of the pentode through C_1, V_1 and C_4 the cathode current and the voltage drop through R_4 and R_6 is reduced, which causes redistribution of the total current, with the larger portion now flowing through the plate. An avalanche process takes place in the system, as a result of which the potential on the control grid and that of the plate are reduced close to the cutoff point. This is not a stable condi-

Card 2/3

APPROVED FOR RELEASE: 08/22/2000 CIA-RDP86-00513R001445820007-0"

"APPROVED FOR RELEASE: 08/22/2000 CIA-RDP86-00513R001445820007-0

L 36853-66

ACC NR: AP6005513

tion because after V_2 is turned on, capacitor C_4 starts to discharge. Consequently, plate current increases and plate voltage decreases linearly until the potential difference between the control grid and the cathode is reduced to almost zero. At this point the plate current, screen current, and the cathode voltage increase rapidly. The suppressor grid potential is suddenly reduced with respect to cathode, causing less plate current and more screen current to flow and the plate voltage to go up. Capacitor C_4 charges through R_5, grid and cathode V_2 and R_6. When the plate voltage reaches its initial value diode V_1 clamps it at this level, and the regeneration cycle is completed. After the passage of the first negative pulse, diode V_1 is cutoff for the duration of the regeneration cycle. This interval is determined by the discharge of C_4. The division factor of this system can be adjusted over a wide range by the setting of R_8. Practical evaluation of this system confirms the stability of the division factor in the presence of the usual disturbances. Orig. art. has: 2 tables, 4 figures.

SUB CODE: 09/ SUBM DATE: none/ ORIG REF: 002

Card 3/3

APPROVED FOR RELEASE: 08/22/2000 CIA-RDP86-00513R001445820007-0"

"APPROVED FOR RELEASE: 08/22/2000 CIA-RDP86-00513R001445820007-0

RUBINSHTEYN, A.Ya.; FOMIN, A.I.

Sapropel in agriculture. Zemledelie 27 no.2:61-67 F '65. (MIRA 18:4)

1. Vsesoyuznyy nauchno-issledovatel'skiy institut udobreniy i agropochvovedeniya (for Rubinshteyn). 2. Vsesoyuznyy nauchno-issledovatel'skiy institut gidrotekhniki i melioratsii (for Fomin).

APPROVED FOR RELEASE: 08/22/2000 CIA-RDP86-00513R001445820007-0"

"APPROVED FOR RELEASE: 08/22/2000 CIA-RDP86-00513R001445820007-0

RUBINSHTEYN, A.Ye., gornyy inzh.

Concerning the textbook by A.P.Kiliachkov "Opening and systems of mining coal deposits." Ugol' 38 no.3:64-65 Mr '63. (MIRA 18:3)

APPROVED FOR RELEASE: 08/22/2000 CIA-RDP86-00513R001445820007-0"

"APPROVED FOR RELEASE: 08/22/2000 CIA-RDP86-00513R001445820007-0

RUBINSHTEYN, A.Yu.

Shoulder Joint

Resistance of the shoulder joint to traumatic influence. Uch. zap/ Vt. mosk. med. inst. 2 1951

Monthly List of Russian Accessions, Library of Congress, April 1952 UNCALSSIFIED

APPROVED FOR RELEASE: 08/22/2000 CIA-RDP86-00513R001445820007-0"

"APPROVED FOR RELEASE: 08/22/2000 CIA-RDP86-00513R001445820007-0

RUBINSHTEYN, B. A.

456. **Method for the quantitative determination of glycerol trinitrate in tablets.** M. S. Shralber and B. A. Rubinshtein (*Aptechnoe Delo*, 1954, 3 [5], 46–47).—The glycerol trinitrate is reduced to ammonia, which is then distilled into an excess of 0·1 *N* H_2SO_4. To 40 tablets (0·5 mg per tablet) in a 500-ml round-bottomed flask, add 100 ml of freshly boiled and cooled water and shake until the tablets are completely disintegrated; then add 20 ml of ethanol, 25 ml of 16 per cent. NaOH soln., 5 ml of 10 per cent. $CuSO_4$ soln. and 2 g of aluminium turnings. Connect to a Kjeldahl adaptor and a receiver containing 10 ml of 0·1 *N* H_2SO_4 and a drop of methyl red in freshly boiled water. When the vigorous reaction has ceased, heat carefully. When the reaction is complete, titrate the excess of acid with 0·1 *N* NaOH. A control experiment is carried out at the same time. E. HAYES.

Kb. Pharm-analyt.
Sci. Res. Chem.-Pharm. Inst; Kharkov

APPROVED FOR RELEASE: 08/22/2000 CIA-RDP86-00513R001445820007-0"

"APPROVED FOR RELEASE: 08/22/2000 CIA-RDP86-00513R001445820007-0

RUBINSHTEYN, B. B. (DECEASED) 1963/3

c ' 1962

EPIDEMIOLOGY-
DISEASES

SEE ILC

APPROVED FOR RELEASE: 08/22/2000 CIA-RDP86-00513R001445820007-0"

"APPROVED FOR RELEASE: 08/22/2000 CIA-RDP86-00513R001445820007-0

RUBINSHTEYN, B.I., inzh.

Semiautomatic six-spindle diamond-boring machine.
Mashinostroenie no.1:35-36 Ja-F '65. (MIRA 18:4)

APPROVED FOR RELEASE: 08/22/2000 CIA-RDP86-00513R001445820007-0"

"APPROVED FOR RELEASE: 08/22/2000 CIA-RDP86-00513R001445820007-0

RUBINSHTEYN, B.I., inzh.

Calculating the strength of a double-hulled ship. Sudostroenie 29 no.10:13-14 O '63. (MIRA 16:12)

APPROVED FOR RELEASE: 08/22/2000 CIA-RDP86-00513R001445820007-0"

"APPROVED FOR RELEASE: 08/22/2000 CIA-RDP86-00513R001445820007-0

RUBINSHTEYN, B.I.

Kustanai Division prepares for the transportation of the Virgin Territory crops. Zhel.dor.transp. 43 no.6:13-17 Je '61. (MIRA 14:7)

1. Nachal'nik Kustanayskogo otdeleniya Kazakhskoy dorogi.
(Virgin territory--Grain--Transportation)
(Railroads--Freight)

APPROVED FOR RELEASE: 08/22/2000 CIA-RDP86-00513R001445820007-0"

"APPROVED FOR RELEASE: 08/22/2000 CIA-RDP86-00513R001445820007-0

RUBINSHTEYN, B.I., inzh.

Self-centering three-cam precision chuck. Mashinostroenie no.3:27-28 My-Je '64. (MIRA 17:11)

APPROVED FOR RELEASE: 08/22/2000 CIA-RDP86-00513R001445820007-0"

"APPROVED FOR RELEASE: 08/22/2000 CIA-RDP86-00513R001445820007-0

RUBINSHTEYN, B.L.; YAKUBOVICH, S.V.; Prinimali uchastiye: BOGDANOVA, G.S.; BAZILEVICH, Z.A.

Photometric determination of the dyeing power of ultramarine. Lakokrss.mat. i ikh prim. no.2:70-71 '61. (MIRA 14:4)
(Ultramarine)

APPROVED FOR RELEASE: 08/22/2000 CIA-RDP86-00513R001445820007-0"

"APPROVED FOR RELEASE: 08/22/2000 CIA-RDP86-00513R001445820007-0

RUBINSHTEYN, B.

Finishing and decoration of motorcycles and bicycles. Tekh.est. no.5:22-23 My '65. (MIRA 18:6)

1. Vsesoyuznyy nauchno-issledovatel'skiy institut tekhnicheskoy estetiki.

APPROVED FOR RELEASE: 08/22/2000 CIA-RDP86-00513R001445820007-0"

"APPROVED FOR RELEASE: 08/22/2000 CIA-RDP86-00513R001445820007-0

RUBINSHTEYN, B.L.

YAKUBOVICH, S.V., kandidat tekhnicheskikh nauk; RUBINSHTEYN, B.L., mladshiy nauchnyy sotrudnik

Classification and nomenclature of lacquers and enamel paints. Standartizatsiia no.5:37-44 S-O'55. (MIRA 8:11)
(Paint) (Lacquer and lacquering)

APPROVED FOR RELEASE: 08/22/2000 CIA-RDP86-00513R001445820007-0"

"APPROVED FOR RELEASE: 08/22/2000 CIA-RDP86-00513R001445820007-0

RUBINSHTEYN, B. L. (Jr. Sci.Assoc.) and YAKUBOVICH, S. V.

"Proposed Soviet Classification and Nomenclature for Varnishes and Enamel Paints," Standardizatsiya, No.5, 1955

Translation W-31647

APPROVED FOR RELEASE: 08/22/2000 CIA-RDP86-00513R001445820007-0"

"APPROVED FOR RELEASE: 08/22/2000 CIA-RDP86-00513R001445820007-0

RUBINSHTEYN, B.L.; YAKUBOVICH, S.V.; BOGDANOVA, G.S.; BAZILEVICH, Z.A.

Photometric method for determining the whitening capacity (intensity) of white pigments. Lakokrás.mat.i ikh prim. no.3:51-55 '60. (MIRA 14:4)

(Pigments)

APPROVED FOR RELEASE: 08/22/2000 CIA-RDP86-00513R001445820007-0"

"APPROVED FOR RELEASE: 08/22/2000 CIA-RDP86-00513R001445820007-0

RASSUDOVA, N.S.; TEREKHOVA, A.I.; LILO, G.N.; ALEKSANDROVA, N.A.; STREL'TSOV, I.S.; RUBINSHTEYN, B.L.

Synthesis and investigation of the characteristics of nickel titanates and mixed nickel-titanium pigments. Lakokras.mat. i ikh prim. no.2: 25-29 '63. (MIRA 16:4)

(Titanium) (Nickel) (Pigments)

APPROVED FOR RELEASE: 08/22/2000 CIA-RDP86-00513R001445820007-0"

"APPROVED FOR RELEASE: 08/22/2000 CIA-RDP86-00513R001445820007-0

RUBINSHTEYN, B.N., professor; RUDNEV, G.P., professor, chlen-korrespondent; KHARIN, Yu.M.; KHASHIMOV, D.; LUKOMSKIY, P.Ye., professor; BILIBIN, A.F., professor; RATNER, S.I., professor.

Modern treatment of dysentery. Terap.arkh. 25 no.2:87-89 Mr-Ap '53. (MLRA 6:5)
(Dysentery)

APPROVED FOR RELEASE: 08/22/2000 CIA-RDP86-00513R001445820007-0"

"APPROVED FOR RELEASE: 08/22/2000 CIA-RDP86-00513R001445820007-0

PROCESSES AND PROPERTIES INDEX

CA

1114

Treatment of malaria in pregnant women with acridine preparations. B. N. Rubinshtein and P. S. Dubovskaya. *Klin. Med.* (U. S. S. R.) 15, 614–18(1937); *Chem. Zentr.* 1939, I, 2241; cf. *C. A.* 31, 7118[9].—Good results were obtained by the treatment of 20 malarial patients during pregnancy with atebrin and Acridine No. 8 (dihydrochloride of 2-methoxy-6-chloro-9-diethylaminobutylaminoacridine). M. G. Moore

ASM-SLA METALLURGICAL LITERATURE CLASSIFICATION

APPROVED FOR RELEASE: 08/22/2000 CIA-RDP86-00513R001445820007-0"

"APPROVED FOR RELEASE: 08/22/2000 CIA-RDP86-00513R001445820007-0

RUBINSHTEYN, B.Sh.; TOMILIN, N.F.

Modern construction of flexible shielded cables. Nauch. trudy KNIUI no. 11:104-109 '62. (MIRA 17:7)

APPROVED FOR RELEASE: 08/22/2000 CIA-RDP86-00513R001445820007-0"

"APPROVED FOR RELEASE: 08/22/2000 CIA-RDP86-00513R001445820007-0

KRAUS, E.G.; RUBINSHTEYN, B.Sh.

Intermediate relays of explosion-proof magnetic starters. Nauch. trudy KNIUI no. 11:124-129 '62.

Some reasons for the corrosion of mine starters. Ibid.:133-137 (MIRA 17:7)

APPROVED FOR RELEASE: 08/22/2000 CIA-RDP86-00513R001445820007-0"

"APPROVED FOR RELEASE: 08/22/2000 CIA-RDP86-00513R001445820007-0

KRAUS, E.G.; RUBINSHTEYN, B.Sh.; V'YUNIK, M.V.

Operation of test samples of the PMVI-3 starter. Nauch. trudy KNIUI no. 11:129-133 '62. (MIRA 17:7)

APPROVED FOR RELEASE: 08/22/2000 CIA-RDP86-00513R001445820007-0"

"APPROVED FOR RELEASE: 08/22/2000 CIA-RDP86-00513R001445820007-0

RUBINSHTEYN, B. V.

21045 Rubinshteyn, B.V. Ortopedo-Khirurgicheskoye lecheniye rezidual'noyo poliomiyelita Trudy In-ta (Kazansk nauch-issled in-t ortopedii i vosstanovit. Khirurgii) t.111, 1949, s. 168-74.

SO: LETOPIS ZHURNAL STATEY - Vol. 28, Moskva, 1949

APPROVED FOR RELEASE: 08/22/2000 CIA-RDP86-00513R001445820007-0"

"APPROVED FOR RELEASE: 08/22/2000 CIA-RDP86-00513R001445820007-0

RUBINSHTEYN, B.V.

Treatment of multiple contractures in poliomyelitis. Vest. khir. 71 no.1:71 1951. (CLML 20:8)

APPROVED FOR RELEASE: 08/22/2000 CIA-RDP86-00513R001445820007-0"

"APPROVED FOR RELEASE: 08/22/2000 CIA-RDP86-00513R001445820007-0

RUBINSHTEYN, B.I.; MALAKHOV, K.N., inzh., retsenzent; SHISHLYKOV, Ye.S., inzh., red.; DROZDOVA, N.D., tekhn. red.

[Grain transportation; from the practices of the Kustanay Section of the Kazakh Railroad] Opyt perevozok zerna; iz praktiki Kustanaiskogo otdeleniia Kazakhskoi dorogi. Moskva, 1963. 38 p. (MIRA 16:8)

(Kazakhstan—Grain—Transportation)

APPROVED FOR RELEASE: 08/22/2000 CIA-RDP86-00513R001445820007-0"

"APPROVED FOR RELEASE: 08/22/2000 CIA-RDP86-00513R001445820007-0

RUBINSHTEYN, B.I., inzh.

Calculation of deck strength by the use of electronic computers. Sudostroenie 30 no.7:17-19 Jl '64. (MIRA 18:9)

APPROVED FOR RELEASE: 08/22/2000 CIA-RDP86-00513R001445820007-0"

"APPROVED FOR RELEASE: 08/22/2000 CIA-RDP86-00513R001445820007-0

RUBINSHTEYN, B.L.; YAKUBOVICH, S.V.; BAZILEVICH, Z.A.

Method for determining the resistance to abrasion of paints. Lakokras.mat. i ikh.prim. no.2:50-52 '64. (MIRA 17:4)

APPROVED FOR RELEASE: 08/22/2000 CIA-RDP86-00513R001445820007-0"

"APPROVED FOR RELEASE: 08/22/2000 CIA-RDP86-00513R001445820007-0

RUBINSHTEYN, B.Sh.; V'YUNIK, V.M.; DEGENAU, V.F.

Investigating the wearing-out of starter contacts. Nauch. trudy KNIUI no.15:10-23 '64.

Investigating the operating conditions of electric equipment in mines. Ibid.:41-51 (MIRA 18:8)

APPROVED FOR RELEASE: 08/22/2000 CIA-RDP86-00513R001445820007-0"

"APPROVED FOR RELEASE: 08/22/2000 CIA-RDP86-00513R001445820007-0

RUBINSHTEYN, B.Ye. (Moskva)

Experiment for demonstrating the formation of intermediated compounds in catalytic reactions. Khim.v shkole 10 no.3:74 My-Je '56. (MLRA 9:8)

(Chemical reactions) (Chemistry--Experiments)

APPROVED FOR RELEASE: 08/22/2000 CIA-RDP86-00513R001445820007-0"

"APPROVED FOR RELEASE: 08/22/2000 CIA-RDP86-00513R001445820007-0

RUBINSHTEYN, B.Ye. (Moskva).

Effect of the concentration of reactive substances on the speed of chemical reactions. Khim. v shkole 11 no.6:43-44 N-D '56.
(Chemical reactions--Velocity) (MLRA 9:12)

APPROVED FOR RELEASE: 08/22/2000 CIA-RDP86-00513R001445820007-0"

"APPROVED FOR RELEASE: 08/22/2000 CIA-RDP86-00513R001445820007-0

Category : USSR/Atomic and Molecular Physics - Physics of high-molecular substance D-9

Abs Jour : Ref Zhur - Fizika, No 1, 1957, No 992

Author : Bartenev, G.M., Reytlinger, S.A., Rubinshteyn, B.Ye.,
Inst : Scientific-Research Institute of the Rubber Industry, Moscow

Title : Permeation to Gas and Vitrification of Polymers.

Orig Pub : Zh. fiz. khimii, 1956, 30, No 3, 532-536

Abstract : The authors indicate that the permeation to gas of a polymer P and the mobility of its molecular rings are determined uniquely by the diffusion properties. Therefore, the stronger the inter-molecular bonds, the lower P and the higher the vitrification temperature T_v. Starting with an equation for the temperature dependence of the diffusion constant D , and taking into account that the activation energy of thepolymer diffusion is greater that T_v and proportional to it, the authors obtained the equation $\log D = A + (BT_v/T)$, where A and B are constants. Assuming $P = D\sigma$, where σ is the solubility of the gas in the polymer, assumed by the authors to be constant for a given gas in all polymers, and making many other assumptions they obtained $\log P \approx A_1 + (B_1T_v/T)$. The approximate linear relationships between log D, log P and T_v actually holds in the region of high-elastic states as shown on the basis of data taken from the literature. Factors that contribute to an increase in T_v simultaneously cause a reduction in P.

Card : 1/1

APPROVED FOR RELEASE: 08/22/2000 CIA-RDP86-00513R001445820007-0"

"APPROVED FOR RELEASE: 08/22/2000 CIA-RDP86-00513R001445820007-0

RUBINSHTEYN, B Ye

Theory of the simultaneous [illegible] of catalysts in solution III. Kinetics [illegible] of hydrogen peroxide by the [illegible] of copper sulfate and potassium chromate. [illegible] and B. E. Rubinstein. [illegible] (1966); cf. C.A. 49, 2164g; 50, 13 79f. [illegible] of H_2O_2 in the simultaneous presence of $CuSO_4$ and K_2CrO_4 (concn. of 0.0005 to 0.0417 moles/l.) was studied by the gasometric method. The data show that in neutral and acid media $CuSO_4$ increases the catalytic activity of K_2CrO_4. The energy of activation E for the reaction increases with an increase in the $CuSO_4$ and a decrease in the K_2CrO_4 concn. For $c_{CuSO_4} > c_{K_2CrO_4}$ $dE/dT > 0$, but for $c_{CuSO_4} < c_{K_2CrO_4}$ $dE/dT < 0$. The data point to the formation of a large no. of intermediate products.

J. Rovtar Leach

RM

APPROVED FOR RELEASE: 08/22/2000 CIA-RDP86-00513R001445820007-0"

"APPROVED FOR RELEASE: 08/22/2000 CIA-RDP86-00513R001445820007-0

RUBINSHTEYN, B. Ye.

APPROVED FOR RELEASE: 08/22/2000 CIA-RDP86-00513R001445820007-0"

"APPROVED FOR RELEASE: 08/22/2000 CIA-RDP86-00513R001445820007-0

APPROVED FOR RELEASE: 08/22/2000 CIA-RDP86-00513R001445820007-0"

"APPROVED FOR RELEASE: 08/22/2000 CIA-RDP86-00513R001445820007-0

RUBINSHTEYN, B. E.

APPROVED FOR RELEASE: 08/22/2000 CIA-RDP86-00513R001445820007-0"

"APPROVED FOR RELEASE: 08/22/2000 CIA-RDP86-00513R001445820007-0

AUTHOR: Rubinshteyn, B. Ye. 76-32-2-3/38

TITLE: The Effect of Zinc- and Hydrogen-Ions on the Catalysis of Hydrogen Peroxide by Potassium Chromate (Vliyaniye ionov tsinka i vodoroda na kataliz perekisi vodoroda khromatom kaliya)

PERIODICAL: Zhurnal Fizicheskoy Khimii, 1958, Vol. 32, Nr 2, pp. 224-231 (USSR)

ABSTRACT: The catalysis of hydrogen peroxide by potassium chromate with simultaneous and common presence of zinc sulfate and sulfuric acid was investigated. It is shown that zinc sulfate, which does not show any own catalytic effect on the decomposition of hydrogen peroxide in neutral and acidous media, activates the catalysis of H_2O_2 by potassium chromate. It is further shown that the activating effect of zinc sulfate decreases with the hydrogen-ion concentration. At $[H^+] > 0{,}001$ g.Ion/1 zinc sulfate reduces the velocity of H_2O_2 catalysis by potassium chromate. The influence of f_{ZnSO_4} on the catalysis is analytically expressed by the equation (3):

Card 1/3

APPROVED FOR RELEASE: 08/22/2000 CIA-RDP86-00513R001445820007-0"

"APPROVED FOR RELEASE: 08/22/2000 CIA-RDP86-00513R001445820007-0

$v = \alpha f^{\beta}$. f denoting the concentration of zinc sulfate, v the velocity of catalysis at a substrate concentration of 0,1 Mol/l, α and β coefficients independent of f. The coefficients depend on the temperature as well as on the H^+ concentration. β becomes smaller with the increase of $[H^+]$, vanishes at $[H^+]$ 0,0015 g.Ion/l and finally becomes negative with a further increase of the H^+ concentration. It is shown that in neutral and weakly acidous media the activation energy of reaction becomes smaller with the increase of f_{ZnSO_4} according to the equation (6) $E = 1,63 - 2,86 \lg f$. E denoting the activation energy in kcal/Mol In neutral and weakly acidous media the catalysis of H_2O_2 by potassium chromate with simultaneous action of $ZnSO_4$ and H^+ is ideally reversible. The velocity of catalysis and therefore the concentration of the intermediate compound is, on these conditions directly proportional to the present substrate concentration and to the square root of the zinc sulfate- and potassium chromate concentration. It can be assumed that the composition of the intermediate compound corresponds to the empirical formula $ZnCrO_4 \cdot 2H_2O_2$. It is shown that the

APPROVED FOR RELEASE: 08/22/2000 CIA-RDP86-00513R001445820007-0"

"APPROVED FOR RELEASE: 08/22/2000 CIA-RDP86-00513R001445820007-0

The Effect of Zinc- and Hydrogen-Ions on the Catalysis of Hydrogen Peroxide by Potassium Chromate 76-32-2-3/38

activating effect of Zn^{2+} is greater than that of Cd^{2+}. The coefficient β in the catalysis of H_2O_2 by potassium chromate in the presence of zinc sulfate is greater and the activation energy is smaller than the values of these quantities in an H_2O_2 catalysis by potassium chlorate in the presence of cadmium sulfate. Finally it is shown that in sufficiently acidous media the velocity of H_2O_2 catalysis by potassium chlorate becomes smaller with the increase of the concentration of H^+ and zinc sulfate.
Professor G. A. Bogdanov assisted the author. There are 3 figures, 3 tables, and 2o references, 13 of which are Soviet.

ASSOCIATION: Moskovskiy aviatsionnyy tekhnologicheskiy institut (Moscow Technological Institute of Aviation)

SUBMITTED: April 3, 1956

Card 3/3

1. Hydrogen peroxide--Catalysis 2. Potassium chromate--Catalytic properties 3. Zinc ions--Chemical effects 4. Hydrogen ions--Chemical effects

APPROVED FOR RELEASE: 08/22/2000 CIA-RDP86-00513R001445820007-0"

"APPROVED FOR RELEASE: 08/22/2000 CIA-RDP86-00513R001445820007-0

ACC NR: AP7005344 SOURCE CODE: UR/0181/67/009/001/0179/0183

AUTHOR: Rubinshteyn, B. Ye.; Galaktionova, G. M.

ORG: none

TITLE: Ferromagnetic resonance in single crystals of bismuth-calcium iron-vanadium garnet

SOURCE: Fizika tverdogo tela, v. 9, no. 1, 1967, 179-183

TOPIC TAGS: garnet, ferrite, ferromagnetic resonance, line width, line broadening, magnetic anisotropy, crystal lattice structure

ABSTRACT: To check on the results previously obtained by one of the authors (Rubinshteyn, FTT v. 6, 3538, 1964) that when the Fe^{3+} ions are replaced by V^{5+} ions in a garnet their anisotropy constant decreases and the single-ion model is applicable, the authors measured the ferromagnetic-resonance line width, the effective g-factor, and the anisotropy constant for the garnet $Bi_{3-2x}Ca_{2x}Fe_{5-x}V_xO_{12}$ with $1.13 \leq x \leq 1.46$. The single crystal growing (by A. G. Titova and R. A. Petrov) is described elsewhere (Izv. AN SSSR, neorganicheskiye materialy, in press). The value of x, determined from the lattice parameter, was 1.13, 1.22, 1.26, 1.35, 1.37, and 1.46. The measurements were made on polished spheres of ~0.5 mm diameter in a TE_{105} cavity at 9228 MHz. The results are presented in the form of plots of the line width and the anisotropic constants against the composition and of the effective g-factor and of the anisotropy constant against the temperature. The anisotropy is shown to exhibit a weak depen-

Card 1/2

APPROVED FOR RELEASE: 08/22/2000 CIA-RDP86-00513R001445820007-0"

"APPROVED FOR RELEASE: 08/22/2000 CIA-RDP86-00513R001445820007-0

ACC NR: AP7005344

dence on the composition, and the reason for this is briefly explained. The line width increases with decreasing x, as a result of the fact that the garnet approaches the compensation point. The g-factor decreases little on approaching the compensation point. The authors also calculate the anisotropy constant, assuming a single-ion model, and find good agreement between the calculated and the experimental values. The authors thank A. G. Gurevich for a discussion of the results. Orig. art. has: 4 figures, 4 formulas, and 1 table.

SUB CODE: 20/ SUBM DATE: 14Jun66/ ORIG REF: 002/ OTH REF: 009

Card 2/2

APPROVED FOR RELEASE: 08/22/2000 CIA-RDP86-00513R001445820007-0"

"APPROVED FOR RELEASE: 08/22/2000 CIA-RDP86-00513R001445820007-0

EWT(m)/EWP(t)/ETI IJP(c) JD/JG

ACC NR: AP6006187 SOURCE CODE: UR/0048/66/030/006/1070/1072

AUTHOR: Rubinshteyn, B.Ye.

ORG: none

TITLE: Concerning the symmetry of the crystal field in yttrium garnet with some of the iron ions replaced by chromium [Report, All-Union Conference on the Physics of Ferro- and Antiferromagnetism held 2-7 July 1965 in Sverlovsk]

SOURCE: AN SSSR. Izvestiya. Seriya fizicheskaya, v. 30. no. 6, 1966, 1070-1072

TOPIC TAGS: ferromagnetic resonance, single crystal, yttrium compound, garnet, chromium, CRYSTAL SYMMETRY

ABSTRACT: The author has investigated ferromagnetic resonance in $Y_3Fe_{5-x}Cr_xO_{12}$ single crystals with values of x ranging from zero to 0.34. The measurements were undertaken in order to compare them with earlier measurements of B.Ye.Rubinshteyn, A.G.Titova, and B.L.Lapovok (Fiz. tverdogo tela, 6, 3539 (1964); 7, 1639 (1965)) on yttrium garnet with some of the Fe^{3+} ions replaced by In^{3+} or Ga^{3+}. The crystals were grown from a PbO + PbF_2 melt, using 99.999% pure yttrium oxide. The value of x for each crystal was determined from the measured lattice parameter. The ferromagnetic resonance of the crystals was investigated at a frequency of 9.1 kMHz, using techniques that have been described in the cited references. The dependence of the resonance field on the angle between the 100 axis and the direction of the constant magnetic field in the (110) plane was determined for each sample at 77 and 300° K. From the values of the reson-

Card 1/2

APPROVED FOR RELEASE: 08/22/2000 CIA-RDP86-00513R001445820007-0"

"APPROVED FOR RELEASE: 08/22/2000 CIA-RDP86-00513R001445820007-0

L 08770-67

ACC NR: AP6020137

ance field in the [100], [110], and [111] directions, the effective g factor was calculated. With increasing x the effective g factor increased from its value of 2.002 at x = 0 to a maximum of 2.004 at x = 0.1, decreased nearly to its initial value at x = 0.25, and subsequently increased rapidly, reaching 2.009 at x = 0.34. From the effective g factors there were calculated the g factors of the three sublattices (the tetrahedral and octahedral sublattices and the "suboctahedral" sublattice assumed to be formed by the Cr^{3+} ions); for this calculation the author used the Neel model and three special assumptions, brief arguments for the validity of which are given. The calculated g factors of the iron sublattices increase, and that of the chromium sub-sublattice decreases, with increasing x, the g factors of all the sublattices being different from 2. From that it is concluded that replacement of Fe^{3+} by Cr^{3+} ions is accompanied by a certain symmetrization of the oxygen polyhedra, leading to an increase of the contribution of the orbital angular momentum to the total angular momentum of the ion. The g factor of the Cr^{3+} ions, assumed to be equal to that of the chromium sub-sublattice for small values of x, was found to be 1.969; this value is close to the values obtained by V.A.Atsarkin (Zh. eksperim. i teor. fiz., 43, 839 (1962)) and R.Stahe-Brada and W.Low (Phys. Rev., 116, 561 (1959)) by the paramagnetic resonance method. Although Cr^{3+} ions are closer in size to Fe^{3+} ions than are Ga^{3+} ions, replacement of Fe^{3+} ions by Cr^{3+} ions led to much greater changes in the g factors of both sublattices than did replacement of them by Ga^{3+} ions. This is ascribed to differences between the electron shell structures of the two ions, and it is concluded that the electron shell structure is more significant than the ionic radius.

Card 2/2

APPROVED FOR RELEASE: 08/22/2000 CIA-RDP86-00513R001445820007-0"

"APPROVED FOR RELEASE: 08/22/2000 CIA-RDP86-00513R001445820007-0

L 00770-67

ACC NR: AP6025187

The author thanks A.G.Titova for growing the crystals, S.Sh.Gondolev for discussing the results, and G.M.Galaktionova for assisting with the measurements. Orig. art. has: 3 formulas and 1 figure.

SUB CODE: 20/ SUBM DATE: 00/ ORIG REF: 003/ OTH REF: 004

Card 3/3 bc

APPROVED FOR RELEASE: 08/22/2000 CIA-RDP86-00513R001445820007-0"

"APPROVED FOR RELEASE: 08/22/2000 CIA-RDP86-00513R001445820007-0

1ST AND 2ND ORDERS

PROCESSES AND PROPERTIES INDEX

3RD AND 4TH ORDERS

M

2

Diffusion Processes in Binary Crystalline Systems. B.G. Petrenko and B.E. Rubinshtein (Zhur/ Fizich. Khimii(J. Phys. Chem.), 1939, 13, 508-513; Brit. Chem. Abs., 1939, (A1), 559.-(In Russian,) Diffusion coeffs. and their temperature coeffs. (energies of loosening, Q) in α and β phases of the systems silver-zinc, silver-cadmium, and copper-zinc were determined by observing the rate at which the volatile component evaporates from the alloy. For β phases, Q is much less than for α phases of the systems. The results show that in intermetallic phases Q depends on the melting point of the phase and is proportional to the radium^2 of the diffusing atom.

Lab. Metallography, Inst. Chem., Kharkov State U.

ASM-SLA METALLURGICAL LITERATURE CLASSIFICATION

COMMON ELEMENTS

COMMON VARIABLES INDEX

MATERIALS INDEX

OPEN

MATERIALS INDEX

AUTHOR INDEX

1ST AND 2ND LETTER

2ND LETTER

3RD AND 4TH ORDERS

APPROVED FOR RELEASE: 08/22/2000 CIA-RDP86-00513R001445820007-0"

"APPROVED FOR RELEASE: 08/22/2000 CIA-RDP86-00513R001445820007-0

PROCESSES AND PROPERTIES INDEX

2

*The Relation Between the Diffusion Coefficient in the Solid Crystalline Phase and the Crystal Size [in Silver-Zinc Alloys]. B. G. Petrenko and R. E. Rubinshtein (*Trudy Inst. Khim. Khar'kov. Gosudarst. Univ.*, 1940, 5, 221–225; *Khim. Referat. Zhur.*, 1941, 4, (9), 34; *C. Abs.*, 1944, 38, 903).—[In Russian.] The diffusion coeff. in the α phase of the system silver–zinc was determined for single crystals at 827° C. and for polycrystalline samples at 777°, 727°, 677°, and 627° C. The dependence of the diffusion coeff. on the fineness of the crystallites of the solid phase is discussed.

ASM-SLA METALLURGICAL LITERATURE CLASSIFICATION

APPROVED FOR RELEASE: 08/22/2000 CIA-RDP86-00513R001445820007-0"

"APPROVED FOR RELEASE: 08/22/2000 CIA-RDP86-00513R001445820007-0

AUTHOR: Rubinshteyn, B.Ye. SOV/108-13-7-3/14

TITLE: The Calculation of Losses in a Symmetric Superhigh-Frequency Filter With Three Elements and Quarter-Wave Connection (Raschët poter' simmetrichnogo trëkhzvennogo svch fil'tra s chetvert'volnovoy svyaz'yu)

PERIODICAL: Radiotekhnika, 1958, Vol. 13, Nr 7, pp. 25-35 (USSR)

ABSTRACT: Symmetric superhigh-frequency filters consisting of three elements are investigated. One of the basic characteristics of such filters is the dependence of the losses on wavelength. First, general theses are set up, and a broad-band superhigh-frequency filter with quarter-wave connections, consisting of 3 resonance elements is investigated. The independent variable, by which filter losses are determined, is the relative wavelength δ, whereas the resonance wavelength in relative quantities γ and the quality of the middle element Q serve as parameters α. The dependence of filter losses on the comparative quality of the middle- and boundary elements is investigated and shown that α_{lim} (determining the comparative quality of the elements) with increasing quality of the middle element approaches the value 1. The dependence of filter losses on wavelength, filter losses with any resonance wave-

Card 1/2

APPROVED FOR RELEASE: 08/22/2000 CIA-RDP86-00513R001445820007-0"