"APPROVED FOR RELEASE: 08/25/2000 CIA-RDP86-00513R001446120013-9

SOKOLOV, V.A.; RUSINOV, L.A.

Orange luminescence of thallium chloride. Izv.vys.ucheb.zav.; fiz. no. 2:149-152 '64. (MIRA 17:6)

1. Leningradskiy tekhnologicheskiy institut imeni Lensoveta.

APPROVED FOR RELEASE: 08/25/2000 CIA-RDP86-00513R001446120013-9"

"APPROVED FOR RELEASE: 08/25/2000 CIA-RDP86-00513R001446120013-9

RUSINOV, L.A.

Present-day concepts of the conditions of phosphorite formation. (MLRA 10:4)
Trudy MGRI 29:112-117 '56.
(Phosphorites)

APPROVED FOR RELEASE: 08/25/2000 CIA-RDP86-00513R001446120013-9"

"APPROVED FOR RELEASE: 08/25/2000 CIA-RDP86-00513R001446120013-9

1961/I

RUSINOV, L.I.

DECEASED
c1960

SEE ILC

PHYSICS

APPROVED FOR RELEASE: 08/25/2000 CIA-RDP86-00513R001446120013-9"

"APPROVED FOR RELEASE: 08/25/2000 CIA-RDP86-00513R001446120013-9

SOKOLOV, G.A., doktor geol.-min. nauk, otv. red. Prinimali uchastiye: VLASOVA, D.K.; GLAGOLEV, A.A.; ZHARIKOV, V.A.; LOGINOV, V.P.; LUKIN, L.I.; MYAKELYA, R.O.; OMEL'YANENKO, B.I.; OSTROVSKIY, I.A.; PERTSEV, N.N.; PODDLESSKIY, K.V.; RUSINOV, L.V.; SOFIANO, T.A.; TIMOFEYEVA, L.K.; SHABYNIN, L.I.; SHADLUN, T.N.; LAPIN, V.V., red. izd-va; MAKUNI, Ye.V., tekhn. red.

[Physicochemical problems in connection with the formation of rocks and ores] Fiziko-khimicheskie problemy formirovaniia gornykh porod i rud. Moskva, Vol.1. 1961. 658 p. (MIRA 14:10)

1. Akademiya nauk SSSR. Institut geologii rudnykh mestorozhdenii, petrografii, mineralogii i geokhimii. 2. Institut geologii rudnykh mestorozhdeniy, petrografii, mineralogii i geokhimii AN SSSR, Moskva (for Vlasova, Glagolev, Zharikov, Omel'yanenko, Ostrovskiy, Pertsov, Shabynin). 3. Moskovskiy geologo-razvedochnyy institut im.S.Ordzhonikidze (for Shabynin, Pertsev.)

(Petrology)

APPROVED FOR RELEASE: 08/25/2000 CIA-RDP86-00513R001446120013-9"

"APPROVED FOR RELEASE: 08/25/2000 CIA-RDP86-00513R001446120013-9

RUSINOV, L I

SMOS

Rusinov, Lev Il'ich Prof

Experimental Physics

VAK, Prot No 8, 17 April 48

BMVO 8/48

APPROVED FOR RELEASE: 08/25/2000 CIA-RDP86-00513R001446120013-9"

"APPROVED FOR RELEASE: 08/25/2000 CIA-RDP86-00513R001446120013-9

RUSINOV, L.Ya., slesar'

Simplify the fastening of TE3 diesel locomotive apparatus. Elekt.i tepl. tiaga 5 no.10:39 9 '61. (MIRA 14:10)

1. Teplovozhnoye depo Krasnoufimsk Gor'kovskoy dorogi. (Diesel locomotives)

APPROVED FOR RELEASE: 08/25/2000 CIA-RDP86-00513R001446120013-9"

"APPROVED FOR RELEASE: 08/25/2000 CIA-RDP86-00513R001446120013-9

GRUSHEVSKIY, M.D.; RUSINOV, M.I.; FEDOSEYEV, V.A.

Calculations of the flooding of the bottom lands of the Irtysh River. Trudy GGI no.121:105-144 '65. (MIRA 18:8)

APPROVED FOR RELEASE: 08/25/2000 CIA-RDP86-00513R001446120013-9"

"APPROVED FOR RELEASE: 08/25/2000 CIA-RDP86-00513R001446120013-9

RUSINOV, M.M., doktor tekhn. nauk, prof.

Stereopanoramic surveys. Izv. vys. ucheb. zav.; geod. i aerof. no.2:123-127 '65. (MIRA 18:10)

1. Leningradskiy institut tochnoy mekhaniki i optiki. Submitted September 3, 1964.

APPROVED FOR RELEASE: 08/25/2000 CIA-RDP86-00513R001446120013-9"

"APPROVED FOR RELEASE: 08/25/2000 CIA-RDP86-00513R001446120013-9

L 7764-66 EWT(1) GW

ACC NR: AP5026540 SOURCE CODE: UR/0286/65/000/019/0084/0084

AUTHORS: Rusinov, M. M.; Vyleva, Ye. A.

55 55

ORG: none

TITLE: Wide-angle telescopic Galileo optical system. Class 42, No. 175270

SOURCE: Byulleten' izobreteniy i tovarnykh znakov, no. 19, 1965, 84

TOPIC TAGS: optic system, telescope system, telescope, telescope component, telescope lens

ABSTRACT: This Author Certificate describes a wide-angle telescopic Galileo optical system consisting of two components (see Fig. 1). To correct for astigmatism throughout the whole field of vision and simultaneously to increase the optical constants of the system, the second focus of the elliptical surface is combined with the center of curvature of the second spherical surface of the first component, with the centers of curvature of both spherical surfaces of the second component, and with the center of the exit pupil of the whole system.

Card 1/2 UDC: 535.834.2

APPROVED FOR RELEASE: 08/25/2000 CIA-RDP86-00513R001446120013-9"

"APPROVED FOR RELEASE: 08/25/2000 CIA-RDP86-00513R001446120013-9

L 7764-66

ACC NR: AP5026540

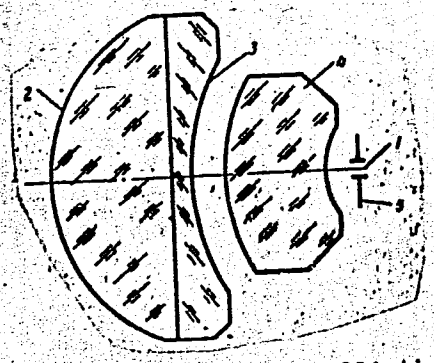

Fig. 1. 1- second focus of the front elliptical surface; 2- front elliptical surface; 3- second spherical surface of the first component; 4- second componsnt; 5- exit pupil of the whole system

Orig. art. has: 1 figure.

SUB CODE: OP/ SUBM DATE: 02Jul64

nw

Card 2/2

APPROVED FOR RELEASE: 08/25/2000 CIA-RDP86-00513R001446120013-9"

"APPROVED FOR RELEASE: 08/25/2000 CIA-RDP86-00513R001446120013-9

RUSINOV, M.M.

Photogrammetric determination of depth profiles in hydraulic models. Izv. Inst. gidrol. i gidr. AN URSR 15:104-109 '59.
(MIRA 12:9)
(Hydraulic models--Photographic measurements)

APPROVED FOR RELEASE: 08/25/2000 CIA-RDP86-00513R001446120013-9"

"APPROVED FOR RELEASE: 08/25/2000 CIA-RDP86-00513R001446120013-9

RUSINOV, M.M.

QB 280.L42

AUTHOR: See Table of Contents

TITLE: Transactions of the Central Scientific Research Institute of Geodesy, Aerial Survey and Cartography (Trudy tsentral'nogo nauchno-issledovatel'skogo instituta geodezii, aeros"yemki i kartografii) Nr 122; Research in Aerial Survey and Photogrammetry (Vypusk 122: Issledovaniya po Aero fotos"yemke i fotogrammetrii).

PUB. DATA: Izdatel'stvo geodezicheskoy literatury, Moscow, 1957, 99 pp., 1000 copies.

ORIG.AGENCY: Glavnoye upravleniye geodezii i kartografii MVD SSSR

EDITORS: Ed.: Zlatkin, Ya. Ye.; Ed. of the Publishing House: Khromchenko, F. I.; Tech. Ed.: Romanova, V. V.; Corrector: Smirnova, A. I.

Card 1/4

APPROVED FOR RELEASE: 08/25/2000 CIA-RDP86-00513R001446120013-9"

"APPROVED FOR RELEASE: 08/25/2000 CIA-RDP86-00513R001446120013-9

QB 280.L42

Transactions of the Central Scientific Research Institute (Cont.)

PURPOSE: This book is part of a series designed to demonstrate improvements and current techniques in air photogrammetry to technically-trained readers.

COVERAGE: This is a group of articles concerning research in photogrammetry and air photography techniques. For personalities and references, see Table of Contents.

TABLE OF CONTENTS

Rusinov, M. M., Doctor of Technical Sciences. Ortoscopy of Non-Centered Aerophoto lenses. 3-32

The author studies the various forms of distortion caused by non-centered air photo lenses, their effect on the photogrammetric properties of photo prints, and the ways of determining the amount of distortion. The study includes a theoretical analysis of distortions of the first and second order which cause the displacement of points in a photo plane or parallaxes which affects the relief image. The writer believes that the residual distortion in the American "Metrogon" lenses is much greater than in the Russian "Russar-29" objectives. There are no personalities or references.

Card 2/4

APPROVED FOR RELEASE: 08/25/2000 CIA-RDP86-00513R001446120013-9"

"APPROVED FOR RELEASE: 08/25/2000 CIA-RDP86-00513R001446120013-9

QB 280.L42

Transactions of the Central Scientific Research Institute (Cont.)

Kozhevnikov, N. P., Candidate of Technical Sciences.
Analysis of Photogrammetric Condensation Methods of Planned Bases. 33-70

The article analyses the precision, special features, and most convenient conditions for composing a reduced base map by means of plane phototriangulation (graphic), photopolygonometry supported by radio-altimeter, and multiplex phototriangulation. Errors and distortions of observations are discussed in detail.

There are no references. The following personalities are mentioned: Skiridov, A. S., Krasheninnikov, G. D., Zhukov, G. P., Aleksapol'-skiy, N. M.

Card 3/4

APPROVED FOR RELEASE: 08/25/2000 CIA-RDP86-00513R001446120013-9"

"APPROVED FOR RELEASE: 08/25/2000 CIA-RDP86-00513R001446120013-9

Rusinov M.M

RUSINOV, M.M., Doktor tekhn. nauk.

Orthoscopy of non-centered aerial photographic objectives. Trudy TSNIIGAIK no.122:3-32 '57. (MIRA 10:12)
(Aerial photogrammetry)

Central Sci Res Inst Geodesy, Aerial Photography, & Cartography.

APPROVED FOR RELEASE: 08/25/2000 CIA-RDP86-00513R001446120013-9"

"APPROVED FOR RELEASE: 08/25/2000 CIA-RDP86-00513R001446120013-9

SOPOLEV, Nikolay Pavlovich; RUSINOV, M.M., prof., doktor tekhn.nauk, retsenzent; SHAVLYUGA, N.I., kand.tekhn.nauk, dots., red.; LEYKINA, T.L., red.izd-va; POL'SKAYA, R.G., tekhn.red.

[Optics in metal cutting machine tools] Optika v metallorezhushchikh stankakh. Moskva, Gos. nauchno-tekhn.izd-vo mashinostroit. lit-ry, 1958. 246 p. (MIRA 11:4)
(Machine tools)

APPROVED FOR RELEASE: 08/25/2000 CIA-RDP86-00513R001446120013-9"

"APPROVED FOR RELEASE: 08/25/2000 CIA-RDP86-00513R001446120013-9

RUSINOV, M.M.

3(4) PHASE I BOOK EXPLOITATION SOV/1835

Akademiya nauk SSSR. Laboratoriya aerometodov

Trudy, t. 6 (Transactions of the Laboratory of Aerial Methods, USSR Academy of Sciences, Vol 6) Moscow, Izd-vo AN SSSR, 1958. 280 p. Errata slip inserted. 1,500 copies printed.

Resp. Ed.: V.F. Miroshnichenko, Candidate of Geological and Mineralogical Sciences; Ed. of publishing House: D.M. Kudritskiy; Tech. Ed.: E.Yu. Bleykh.

PURPOSE: This volume is intended for geologists, photo interpreters, or other personnel engaged in the study of landscape formations, especially from the standpoint of aerial photography.

COVERAGE: This collection of studies and brief articles treats problems in aerial photography and photo interpretation in relation to geological phenomena. The geographical area of study, with minor exceptions, is the Caspian plains and western shore. Most of the studies are well illustrated with aerial photographs. Aside from the numerous articles on geological phenomena of the Caspian basin, the following are also covered: portions of the Russian platform, the Muyunkumy sands of Central Kazakhstan, photo interpretation of clayey flats, desert vegetation and tree cover, the effective lens speed of photographic objectives, photogrammetric determination of profiles on hydro technical models, and others. No personalities are mentioned. References follow each main article.

TABLE OF CONTENTS:

Dementyev, V.I. The Most Favorable Time, in Regard to the Phenological State for Aerial Photographing of Forests, Using Panchromatic Film 176

Rusinov, M.M. Light Distribution Over the Field of Coverage and the Effective Lens Speed of Photographic Objectives 188

BRIEF ARTICLES

Volkov, I.A. Traces of Khvalynskoye Sea Shorelines Northwest of Station Bala-Ishem in Western Turkmeniya 203

Volkov, I.A. Origin of the Planation Surfaces of the Eastern Portion of the Malyy Balkhan (ridge) 207

Kobets, N.V. Forms of Cumulative Relief on the Subsea Slope of the Caspian Sea on the Kitin[illegible]

APPROVED FOR RELEASE: 08/25/2000 CIA-RDP86-00513R001446120013-9"

"APPROVED FOR RELEASE: 08/25/2000 CIA-RDP86-00513R001446120013-9

RUSINOV, M. M.

AUTHOR: Feklistov, Ye. M., Engineer SOV/154-58-2-18/22

TITLE: Scientific and Technical Conference of the MIIGA i K (Nauchno-tekhnicheskaya konferentsiya MIIGA i K) III

PERIODICAL: Izvestiya vysshikh uchebnykh zavedeniy. Geodeziya i aerofotos"yemka, 1958, Nr 2, pp 115-116 (USSR)

ABSTRACT: In the section for aerophoto-geodetical and photogrammetrical instruments the following persons gave lectures: Professor M. M. Rusinov on "New Tendencies in the Production of Objectives in Instruments Used for Cartographical Aerial Photography." Professor A. N. Lobanov: "On Three-Dimensional Phototriangulation and the Use of Electronic Computers." Professor A. P. Mashkovich: "On Some Theoretical Statements With Regard to Questions of Photogrammetry in Connection With the Production of Precision Instruments for These Purposes." Engineer M. V. Mazov: "The Radio-Synchronizer for Simultaneous Photos From Two Airplanes." Professor K. S. Lyalikov: "Apparatus and Laboratories for Aerial Methods of the AS USSR for the Study of Spectral Intensity." Docent N. P. Zakaznov: "Making the Transformation of Aerial Photographs Automatic." Engineer L. P. Churayev: "Automatic Control of the AFA Exposure." Engineer I. G.

Card 1/2

APPROVED FOR RELEASE: 08/25/2000 CIA-RDP86-00513R001446120013-9"

"APPROVED FOR RELEASE: 08/25/2000 CIA-RDP86-00513R001446120013-9

SOV/154-58-2-18/22

Scientific and Technical Conference of the MIIGA i K. III

Indichenko: "Stereophotogrammetrical Coupled Cameras." In a joint session of the sections for geodetical and photogrammetrical instruments Engineer L. Ye Mindlin read a paper on "The Method of Heterodyne Phases in Geophysical Photos." Docent B. N. Rodionov reported on "The Problem of Making Aerial Photography Automatic."
Altogether, there were 32 lectures and reports given. 52 delegates participated in the discussions.

Moscow Inst. of Engineers of Geodesy, Aerial Photography, and Cartography

Card 2/2

APPROVED FOR RELEASE: 08/25/2000 CIA-RDP86-00513R001446120013-9"

"APPROVED FOR RELEASE: 08/25/2000 CIA-RDP86-00513R001446120013-9

AUTHOR: Rusinov, M. M., Doctor of Technical Sciences 6-58-3-7/16

TITLE: On the Correction of Distortion by Means of Deformation of the First Surface of the Rectifying Glass in Aerophotographic Apparatus (Ob ispravlenii distorsii s pomoshch'yu deformirovaniya pervoy poverkhnosti vyravnivayushchego stekla v aerofotoapparatakh)

PERIODICAL: Geodeziya i Kartografiya, 1958, Nr 3, pp. 37-39 (USSR)

ABSTRACT: On the two cases of the use of nonspherical surfaces in optical systems occurring in practice, where the nonspherical surface is paired with a plane one and whereby the so-called "nonspherical correction- or deformed plates" are formed, the case is investigated here where the deformation of one of the surfaces of the pressing glass is used. The pressing glass is placed in the aerophotographic apparatus in the image plane (more exactly: near it) for the correction of the residual distortion of the optical system. The amount of the change of distortion by means of the correction plate will in general be influenced by three factors: 1) the (original) thickness of plate, 2) the change of thickness according to

Card 1/2

APPROVED FOR RELEASE: 08/25/2000 CIA-RDP86-00513R001446120013-9"

"APPROVED FOR RELEASE: 08/25/2000 CIA-RDP86-00513R001446120013-9

On the Correction of Distortion by Means of Deformation of the First Surface of the Rectifying Glass in Aerophotographic Apparatus 6-58-3-7/16

the field, 3) the change of the angle between the main ray and the axis of the optical system after the diffraction through the deformed surface. The formula (10) is derived. It characterizes to a sufficient degree the phenomena occurring in the deformation of the first plate surface and confirms that the three above-mentioned factors influence the change of distortion. This formula is exact. Further the difference of the tangents of the second term, occurring in the formula, is investigated and the formula (20) for this difference is derived. Then formula (10) is transscribed according to (20) and finally the formula (25) is derived. There are 2 figures.

AVAILABLE: Library of Congress

1. Aerial photography--Distortion 2. Photographic equipment--Applications

Card 2/2

APPROVED FOR RELEASE: 08/25/2000 CIA-RDP86-00513R001446120013-9"

"APPROVED FOR RELEASE: 08/25/2000 CIA-RDP86-00513R001446120013-9

SOV/6-58-6-6/21

AUTHORS: Rusinov, [illegible] K., Doctor of Technical Sciences, Viktorov, N. V.

TITLE: On the Prospects and the Peculiarities of Aerial Photography With Especially Wide-Angle Aerial Lenses (O nekotorykh vozmozhnostyakh i osobennostyakh aerofotos"yemki osobo shiro-kougol'nymi aerofotoob"yektivami)

PERIODICAL: Geodeziya i kartografiya, 1958, Nr 6, pp. 27-30 (USSR)

ABSTRACT: The creation of extra-wide-angle aerial lenses with a range of almost 150° (148°30') and a correspondingly small focal length f' = 36 mm results in considerable changes in the relations between some quantities in aerial photography. The conditions, that must be complied with in aerial photographing, and the prospects of using an aerial lens are examined. At a transition to such an extra-short focal length it will be possible to produce aerial photographs for all basic map-scales by a variation of the altitude of the aeroplane within usual limits. The magnitude of image displacement caused by the velocity and the drift (riskantya) of the aeroplane are independent of the focal length of the objective at a given scale factor. The distortions caused by the shaking

Card 1/2

APPROVED FOR RELEASE: 08/25/2000 CIA-RDP86-00513R001446120013-9"

"APPROVED FOR RELEASE: 08/25/2000 CIA-RDP86-00513R001446120013-9

SOV/6-58-6-6/21

On the Prospects and the Peculiarities of Aerial Photography with Especially Wide-Angle Aerial Lenses

of the camera are reduced as the reduction of the focal length and is increased inversely as the square of the cosine of the aperture angle. It is shown that, contrary to ordinary objectives, where an overlap as small as possible is wanted, such a necessity does not exist with extra-wide-angle objectives. Overlaps of up to from 90-95 % can be used. The transition to shorter base lines permits to preserve the format of the picture. The transition to great overlaps and small basis lines is of particular importance, as the requirements as to the orthoscopical properties of the objective can be slackened. A formula for the error Δ_p in the parallaxis due to distortion is deduced. The formula is analysed by means of four tables (2, 3, 4 and 5). It may be seen that at overlaps of up to 60 % (basis line 40 %) the error in the parallaxes is comparable to that caused by distortion. At an overlap of 95 % the error in the parallaxes is almost by one order smaller than in the first case. There are 1 figure, 5 tables, and 1 Soviet reference.

Card 2/2

1. Aerial photography--Equipment 2. Photographic lenses--Performance 3. Photographic lenses--Mathematical analysis

APPROVED FOR RELEASE: 08/25/2000 CIA-RDP86-00513R001446120013-9"

"APPROVED FOR RELEASE: 08/25/2000 CIA-RDP86-00513R001446120013-9

RUSINOV, M.M.

Light distribution and effective aperture of photographic lenses. Trudy Lab. aeromet. 6:188-202 '58. (MIRA 12:1)
(Lenses, Photographic)

APPROVED FOR RELEASE: 08/25/2000 CIA-RDP86-00513R001446120013-9"

"APPROVED FOR RELEASE: 08/25/2000 CIA-RDP86-00513R001446120013-9

RUSINOV, M.M.

Using hydrotechnical models for photogrammetric determination of deep profiles. Trudy Lab. aeromet. 6:262-269 '58. (MIRA 12:1)
(Geological modeling) (Photogrammetric pictures)

APPROVED FOR RELEASE: 08/25/2000 CIA-RDP86-00513R001446120013-9"

"APPROVED FOR RELEASE: 08/25/2000 CIA-RDP86-00513R001446120013-9

SOV/6-59-2-7/22

3(4)

AUTHOR: Rusinov, M. M., Doctor of Technical Sciences

TITLE: On the Influence of the Rectifying Glass Upon the Change in Astigmatism of an Air-camera Objective (O vliyanii vyravnivayushchego stekla na izmeneniye astigmatizma aerofotoob"yektiva)

PERIODICAL: Geodeziya i kartografiya, 1959, Nr 2, pp 33 - 35 (USSR)

ABSTRACT: In the article "On the Correction of Distortions by Means of Deformation of the First Surface of the Rectifying Glass in Air Cameras"(Ref 1, Geodeziya i kartografiya, 1958, Nr 3, pp 37 - 39) the author pointed to the possibility of correcting distortions in air cameras at the expense of a deformation of the lower surface of the glass that is used for rectifying the film. In the present paper the author investigated the influence exercised by deformation of the lower surface of the rectifying glass upon the change in astigmatism of an air-camera objective. Formula (20) is deduced which shows that the quantity of astigmatism substituted by surface deformation in fields of sight of

Card 1/2

APPROVED FOR RELEASE: 08/25/2000 CIA-RDP86-00513R001446120013-9"

"APPROVED FOR RELEASE: 08/25/2000 CIA-RDP86-00513R001446120013-9

On the Influence of the Rectifying Glass Upon the Change in Astigmatism of an Air-camera Objective SOV/6-59-2-7/22

$2\beta = 90^{\circ}$ and more is commensurable with abscissa x of the deformed profile. There are 1 figure and 1 Soviet reference.

Card 2/2

APPROVED FOR RELEASE: 08/25/2000 CIA-RDP86-00513R001446120013-9"

"APPROVED FOR RELEASE: 08/25/2000 CIA-RDP86-00513R001446120013-9

ACC NR: AP6021461 (N) SOURCE CODE: UR/0413/66/000/011/0083/0083

INVENTOR: Rusinov, M. M.; Ivanov, P. D.

ORG: None

TITLE: A fast wide-angle hydrologic surveying objective lens. Class 42, No. 182359

SOURCE: Izobreteniya, promyshlennyye obraztsy, tovarnyye znaki, no. 11, 1966, 83

TOPIC TAGS: lens, hydrologic instrument, surveying instrument

ABSTRACT: This Author's Certificate introduces a fast wide-angle hydrologic surveying objective lens which contains a plano-elliptical lens and an orthoscopic component. To increase the relative aperture and improve image quality, the orthoscopic component is made in the form of a symmetric objective lens with positive plano-convex lenses mounted in the front and back. The lens mounted behind the symmetric objective is made up of three separate lenses cemented together.

Card 1/2 UDC: 771.351.7

APPROVED FOR RELEASE: 08/25/2000 CIA-RDP86-00513R001446120013-9"

"APPROVED FOR RELEASE: 08/25/2000 CIA-RDP86-00513R001446120013-9

ACC NR: AP6021461

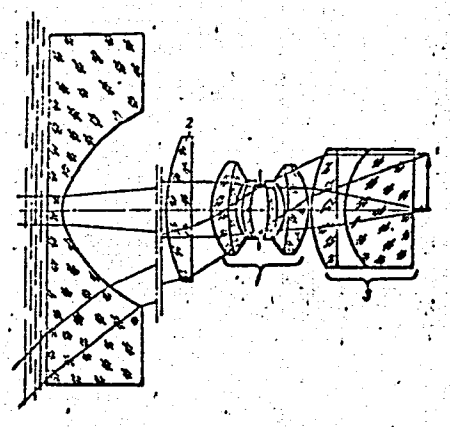

1—symmetric objective lens;
2 and 3—positive plano-convex lenses

SUB CODE: 17, 08/ SUBM DATE: 11Sep64

Card 2/2

APPROVED FOR RELEASE: 08/25/2000 CIA-RDP86-00513R001446120013-9"

"APPROVED FOR RELEASE: 08/25/2000 CIA-RDP86-00513R001446120013-9

ACC NR: AP6025635 (A) SOURCE CODE: UR/0413/66/000/013/0088/0088

INVENTOR: Rusinov, M. M.; Yurchenko, Yu. F.

ORG: None

TITLE: A symmetric wide angle aerial photographic lens. Class 42, No. 183426

SOURCE: Izobreteniya, promyshlennyye obraztsy, tovarnyye znaki, no. 13, 1966, 88

TOPIC TAGS: aerial camera lens, optic element, light aberration

ABSTRACT: This Author's Certificate introduces a symmetric wide angle aerial photographic lens which contains two negative elements and a positive component consisting of two cemented three-lens units. The lens is designed for increased relative aperture with simultaneous correction for aberration, particularly spherical aberration, both in the center of the visual field and in broad oblique rays. Two positive lenses are added to the positive component with a focal length of 20-30% that of the objective. There is a 0.2-1.0 ratio between the difference in the refractive indices of the materials used in the elements of the three-lens component which form cemented radii which are concave toward the diphragm, and the difference in the refractive indices of the material used for the elements in the same component which form cemented radii which are convex toward the diaphragm. The cemented surfaces which are concave toward the diaphragm are located at a distance equal to 10-25% of the focal length of the objective.

Card 1/2

UDC: 771.351.3:778.35

APPROVED FOR RELEASE: 08/25/2000 CIA-RDP86-00513R001446120013-9"

"APPROVED FOR RELEASE: 08/25/2000 CIA-RDP86-00513R001446120013-9

ACC NR: AP6025635

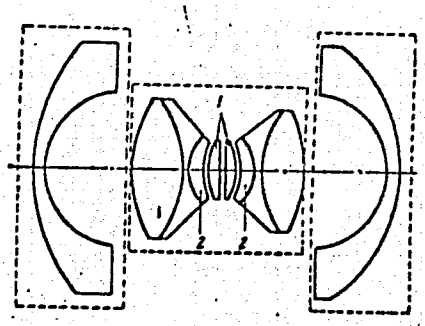

1—positive lenses; 2—three-lens units

SUB CODE: 20, 14/ SUBM DATE: 03May65

Card 2/2

APPROVED FOR RELEASE: 08/25/2000 CIA-RDP86-00513R001446120013-9"

"APPROVED FOR RELEASE: 08/25/2000 CIA-RDP86-00513R001446120013-9

L 11800-66 FSS-2/EWT(1)/EWA(d)/T/EWA(c) IJP(c)

ACC NR: AP6002555 SOURCE CODE: UR/0286/65/000/023/0054/0054

INVENTOR: Agal'tsova, N. A.; Rusinov, M. M.

ORG: none

TITLE: Wide-angle orthoscopic lens for aerial photography. Class 42, No. 176702. [announced by the Central Scientific Research Institute of Geodesy, Aerial Photography, and Cartography (Tsentral'nyy nauchno-issledovatel'skiy institut geodezii, aerosyemki i kartografii)]

SOURCE: Byulleten' izobreteniy i tovarnykh znakov, no. 23, 1965, 54

TOPIC TAGS: photographic lens, aerial camera lens, ~~orthoscopic lens~~ aerial photography

ABSTRACT: A wide-angle orthoscopic lens for aerial photography (see figure) is

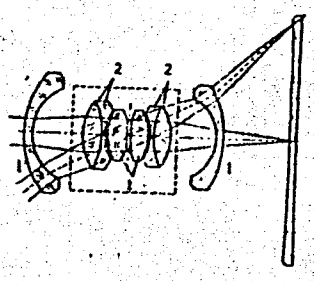

Fig. 1. Wide-angle orthotropic lens

1 - Inner converging lens; 2 - cemented components.

Card 1/2 UDC: 535.813.1:778.35

APPROVED FOR RELEASE: 08/25/2000 CIA-RDP86-00513R001446120013-9"

"APPROVED FOR RELEASE: 08/25/2000 CIA-RDP86-00513R001446120013-9

L 11800-66

ACC NR: AP6002555

introduced. To enlarge the relative aperture with a simultaneous levelling of the film, the inner converging lens is separated from other cemented components by an air gap. Orig. art. has: 1 figure. [JR]

SUB CODE: 14/ SUBM DATE: 11Jun64/ ATD PRESS: 4179

HW

Card 2/2

APPROVED FOR RELEASE: 08/25/2000 CIA-RDP86-00513R001446120013-9"

"APPROVED FOR RELEASE: 08/25/2000 CIA-RDP86-00513R001446120013-9

RUSINOV, M.M., doktor tekhn. nauk, prof.

Obtaining the height of objects from the shadows of stereophotographs. Izv.vys.ucheb.zav.; goed. i aerof. no.1:121-124 '64.

(MIRA 17:12)

1. Leningradskiy institut tochnoy mekhaniki i optiki.

APPROVED FOR RELEASE: 08/25/2000 CIA-RDP86-00513R001446120013-9"

"APPROVED FOR RELEASE: 08/25/2000 CIA-RDP86-00513R001446120013-9

RUSINOV, Mikhail Mikhaylovich; ZAKAZNOV, N.P., red.

[Nonspherical surfaces in optics] Nesfericheskie poverkhnosti v optike. Moskva, Nedra, 1965. 194 p. (MIRA 18:5)

APPROVED FOR RELEASE: 08/25/2000 CIA-RDP86-00513R001446120013-9"

"APPROVED FOR RELEASE: 08/25/2000 CIA-RDP86-00513R001446120013-9

RUSINOV, M.M.

Calculation of an aplanatic system composed of two nonspherical surfaces of a higher order. Izv.vys.ucheb.zav.; prib. 6 no.3:115-117 '63. (MIRA 16:9)

1. Leningradskiy institut tochnoy mekhaniki i optiki. Rekomendovana kafedroy optiko-mekhanicheskikh priborov.

APPROVED FOR RELEASE: 08/25/2000 CIA-RDP86-00513R001446120013-9"

"APPROVED FOR RELEASE: 08/25/2000 CIA-RDP86-00513R001446120013-9

S/035/62/000/012/049/064
A001/A101

AUTHOR: Rusinov, M. M.

TITLE: On some regularities of slit photography

PERIODICAL: Referativnyy zhurnal, Astronomiya i Geodeziya, no. 12, 1962, 16, abstract 12G115 ("Sb. statey po geod.", 1962, no. 12, 75 - 90)

TEXT: The author considers regularities and derives relation formulae between coordinates of the country and aerial photographs taken with a slit ca mera under the following conditions: 1) The optical system produces a plane image whose all points move along definite trajectories with definite (gene non-uniform) speeds. This includes also a case when the optical system p non-plane image, e.g. cylindrical spatial image, which can be brought tc image when considering development of such an image onto a plane; 2) screen with a cut-in slit is located behind the optical system in the the image. The screen slit may be arbitrarily oriented and have a shape; 3) the film, moving uniformly and linearly, is located at of the screen and is exposed while passing by the screen slit.

Card 1/2

APPROVED FOR RELEASE: 08/25/2000 CIA-RDP86-00513R001446120013-9"

"APPROVED FOR RELEASE: 08/25/2000 CIA-RDP86-00513R001446120013-9

On some regularities of slit photography

S/035/62/000/012/049/064
A001/A101

derived can not be solved in general form. Final formulae are given for the following particular cases: 1) Film motion is rectilinear and uniform (the system of slit coordinates does not rotate relative to the film coordinates); 2) film motion is uniform and rectilinear (there is no rotation of the slit coordinate system, and the slit itself is linear); 3) linear slit coincides with the ordinate axis (film motion is rectilinear and uniform); 4) the same as in 3 but systems of coordinates of the slit and film are parallel. The case of panorama and helical photographies is also considered.

S. Knorozov

[Abstracter's note: Complete translation]

Card 2/2

APPROVED FOR RELEASE: 08/25/2000 CIA-RDP86-00513R001446120013-9"

"APPROVED FOR RELEASE: 08/25/2000 CIA-RDP86-00513R001446120013-9

RUSINOV, M.M.

Some characteristics of surveying with a continuous-strip camera. Sbor. stat. po geod. no.12:75-90 '62. (MIRA 15:7)
(Aerial photogrammetry)

APPROVED FOR RELEASE: 08/25/2000 CIA-RDP86-00513R001446120013-9"

"APPROVED FOR RELEASE: 08/25/2000 CIA-RDP86-00513R001446120013-9

RUSINOV, Mikhail Mikhaylovich; LIVSHITS, E.M., red.; VASIL'YEVA, V.I., red.izd-va; ROMANOVA, V.V., tekhn. red.

[Photogrammetric optics] Fotogrammetricheskaia optika. Moskva, Geodezizdat, 1962. 214 p. (MIRA 15:7)
(Photogrammetry)

APPROVED FOR RELEASE: 08/25/2000 CIA-RDP86-00513R001446120013-9"

"APPROVED FOR RELEASE: 08/25/2000 CIA-RDP86-00513R001446120013-9

RUSINOV, M.M.

Joint work of a large-radius surface and a glued surface. Izv.vys. ucheb.zav.; prib. 4 no.5:108-111 '61. (MIRA 14:10)

1. Leningradskiy institut tochnoy mekhaniki i optiki. Rekomendovana kafedroy optiko-mekhanicheskikh priborov.
(Optical instruments)

APPROVED FOR RELEASE: 08/25/2000 CIA-RDP86-00513R001446120013-9"

"APPROVED FOR RELEASE: 08/25/2000 CIA-RDP86-00513R001446120013-9

RUSINOV, M.M.

Astigmatism caused by a glued surface. Izv.vys.ucheb.zav.; prib. 3 no.3:77-84 '60. (MIRA 14:4)

1. Leningradskiy institut tochnoy mekhaniki i optiki. Rekomendovana kafedroy optiko-mekhanicheskikh priborov.
(Astigmatism) (Lenses)

APPROVED FOR RELEASE: 08/25/2000 CIA-RDP86-00513R001446120013-9"

"APPROVED FOR RELEASE: 08/25/2000 CIA-RDP86-00513R001446120013-9

PHASE I BOOK EXPLOITATION SOV/5659

Rusinov, Mikhail Mikhaylovich

Tekhnicheskaya optika (Technical Optics) Moscow, Mashgiz, 1961. 327 p. Errata slip inserted. 15,000 copies printed.

Reviewer: Ye. G. Yakhontov, Doctor of Physical and Mathematical Sciences; Ed.: V. V. Khvalovskiy, Engineer; Eds. of Publishing House: T. L. Leykina and I. A. Borodulina; Tech. Ed.: M. M. Peterson; Managing Ed. for Literature on Machine-Building Technology (Leningrad Department, Mashgiz): Ye. P. Naumov, Engineer.

PURPOSE: This book is intended for technical personnel concerned with calculations of optical systems and for laboratory technicians. It may also be useful to students of optics in schools of higher education.

COVERAGE: The book deals with the development of optical instruments with superior optical characteristics. Data are included

Card ~~1~~/12

APPROVED FOR RELEASE: 08/25/2000 CIA-RDP86-00513R001446120013-9"

"APPROVED FOR RELEASE: 08/25/2000 CIA-RDP86-00513R001446120013-9

on geometric wide-angle optics, collimation of beams of light rays in large fields of vision, aberrations, and the synthesis of optical systems. General laws applicable to large fields of vision and properties of principal design elements for various optical systems are also covered. Data useful in solving basic engineering problems in the development of improved optical systems are also included. No personalities are mentioned. There are 15 references: 9 Soviet, 3 German, 2 English, and 1 French.

TABLE OF CONTENTS:

Foreword 3

PART I. GEOMETRICAL WIDE-ANGLE OPTICS

Ch. I. Collinear Relationship in Large Fields 5
1. Basic conditions 5
2. Concept of focal lengths along the principal ray 7

APPROVED FOR RELEASE: 08/25/2000 CIA-RDP86-00513R001446120013-9"

"APPROVED FOR RELEASE: 08/25/2000 CIA-RDP86-00513R001446120013-9

RUSINOV, M.M.

Relationship between the changes in distortion and astigmatism caused by the displacements of the object. Izv.vys.ucheb.zav.; prib. 4 no.3:103-108 '61. (MIRA 14:6)

1. Leningradskiy institut tochnoy mekhaniki i optiki. Rekomendovana kafedroy optiko-mekhanicheskikh priborov.
(Optical instruments)

APPROVED FOR RELEASE: 08/25/2000 CIA-RDP86-00513R001446120013-9"

"APPROVED FOR RELEASE: 08/25/2000 CIA-RDP86-00513R001446120013-9

RUSINOV, M.M.

Spherical aberration in the range of vision for a meniscus with close and far positions of the sight hole. Izv.vys.ucheb.zav.; prib. 3 no.2:65-75 '60. (MIRA 14:4)

1. Leningradskiy institut tochnoy mekhaniki i optiki. Rekomendovana kafedroy optiko-mekhanicheskikh priborov.
(Aberration)

APPROVED FOR RELEASE: 08/25/2000 CIA-RDP86-00513R001446120013-9"

"APPROVED FOR RELEASE: 08/25/2000 CIA-RDP86-00513R001446120013-9

RUSINOV, M.M.

Distortion and coma of a flat parabolic lens. Izv.vys.ucheb.zav.; prib. 3 no.2:76-80 '60. (MIRA 14:4)

1. Leningradskoy institut tochnoy mekhaniki i optiki. Rekomendovana kafedroy optiko-mekhanicheskikh priborov.
(Lenses)

APPROVED FOR RELEASE: 08/25/2000 CIA-RDP86-00513R001446120013-9"

"APPROVED FOR RELEASE: 08/25/2000 CIA-RDP86-00513R001446120013-9

RUSINOV, M.M.

Over-all size of a two-component objective. Izv.vys.ucheb.zav.; prib. 3 no.6:62-65 '60. (MIRA 14:1)

1. Leningradskoy institut tochnoy mekhaniki i optiki. Rekomendovana kafedroy optiko-mekhanicheskikh priborov.
(Lenses)

APPROVED FOR RELEASE: 08/25/2000 CIA-RDP86-00513R001446120013-9"

"APPROVED FOR RELEASE: 08/25/2000 CIA-RDP86-00513R001446120013-9

RUSINOV, M.M., doktor tekhn.nauk, prof.

Some characteristics of positive lenses. Izv. vys. ucheb. zav.; prib. 3 no. 1:77-89 '60. (MIRA 14:5)

1. Leningradskiy institut tochnoy mekhaniki i optiki. Rekomendovana kafedroy optiko-mekhanicheskikh priborov.
(Lenses)

APPROVED FOR RELEASE: 08/25/2000 CIA-RDP86-00513R001446120013-9"

"APPROVED FOR RELEASE: 08/25/2000 CIA-RDP86-00513R001446120013-9

RUSINOV, M.M., doktor tekhn.nauk, prof.

Some characteristics of lenses with nonspherical surfaces of the second order. Izv. vys. ucheb. zav.; prib. 3 no. 1:90-96 '60. (MIRA 14:5)

1. Leningradskiy institut tochnoy mekhaniki i optiki. Rekomendovana kafedroy optiko-mekhanicheskikh priborov.
(Lenses)

APPROVED FOR RELEASE: 08/25/2000 CIA-RDP86-00513R001446120013-9"

"APPROVED FOR RELEASE: 08/25/2000 CIA-RDP86-00513R001446120013-9

RUSINOV, Mikhail Mikhaylovich; YAKHONTOV, Ye.G., doktor fiz.-matem. nauk, retsenzent; KHVALOVSKIY, V.V., inzh., red.; LEYKINA, T.L., red.izd-va; BORODULINA, I.A., red.izd-va; PETERSON, M.M. tekhn.red.

[Technical optics] Tekhnicheskaia optika. Moskva, Gos.nauchno-tekhn.izd-vo mashinostroit.lit-ry, 1961. 327 p. (MIRA 14:6)

(Optics)

APPROVED FOR RELEASE: 08/25/2000 CIA-RDP86-00513R001446120013-9"

"APPROVED FOR RELEASE: 08/25/2000 CIA-RDP86-00513R001446120013-9

87871

9,1910

S/146/60/003/006/007/013
B012/B060

AUTHOR: Rusinov, M. M.

TITLE: Size of a Two-component Objective

PERIODICAL: Izvestiya vysshikh uchebnykh zavedeniy. Priborostroyeniye, 1960, Vol. 3, No. 6, pp. 62 - 65

TEXT: The author studied the relationships between the dimensions of the front lenses of wide-angle objectives consisting of two lens systems. With the aid of Fig.1 formulas are derived, by which it is possible to determine the refractive powers of the two systems, the distances between the lens systems, as well as the enlargement for the second system. The quantities given are the angular enlargement of the first system and the ratio of the diameter of the first system to the diameter of the image produced by the objective. Fig.1 shows f_1' and f_2' - the focal length of the first and the second system, respectively, the air interspace d, and the height H of the main beam in the first system. The angular enlargement $W_1 = \beta_2/\beta_1$ V_2 is the enlargement of the second

Card 1/2

APPROVED FOR RELEASE: 08/25/2000 CIA-RDP86-00513R001446120013-9"

"APPROVED FOR RELEASE: 08/25/2000 CIA-RDP86-00513R001446120013-9

Size of a Two-component Objective

87871
S/146/60/003/006/007/013
B012/B060

component; $y' = -f'\beta_1$. φ_1 and φ_2 are the refractive power of the first and second system, respectively. The publication of this article was recommended by the kafedra optiko-mekhanicheskikh priborov (Department for Optical and Mechanical Instruments). There is 1 figure.

ASSOCIATION: Leningradskiy institut tochnoy mekhaniki i optiki (Leningrad Institute of Precision Mechanics and Optics)

SUBMITTED: January 14, 1960

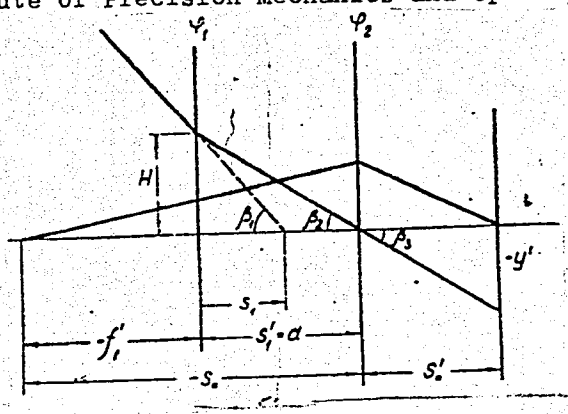

Fig.1

Card 2/2

APPROVED FOR RELEASE: 08/25/2000 CIA-RDP86-00513R001446120013-9"

"APPROVED FOR RELEASE: 08/25/2000 CIA-RDP86-00513R001446120013-9

MINIOVICH, David Semenovich [deceased]; RUSINOV, M.M., prof., doktor tekhn. nauk, nauchnyy red.; SHAKHOV, A.I., inzh., nauchnyy red.; KUSKOVA, A.I., red.; KOROVENKO, Yu.N., tekhn.red.

[Using photogrammetry in shipbuilding and ship repairing] Fotogrammetricheskii metod v sudostroenii i sudoremonte. Nauchnye red. M.M.Rusinov i A.I.Shakhov. Leningrad, Gos.soiuznoe izd-vo sudostroit.promyshl., 1960. 135 p. (MIRA 14:3)
(Photogrammetry) (Shipbuilding)
(Ships--Maintenance and repair)

APPROVED FOR RELEASE: 08/25/2000 CIA-RDP86-00513R001446120013-9"

"APPROVED FOR RELEASE: 08/25/2000 CIA-RDP86-00513R001446120013-9

9.5300

S/123/60/000/019/006/008
A005/A001

Translation from: Referativnyy zhurnal, Mashinostroyeniye, 1960, No. 19, p. 295, # 106056

AUTHOR: Rusinov, M. M.

TITLE: On Changes in the Spheric Aberration of Optical Systems 21 Consisting of Concentric Surfaces, When the Object Position Alters

PERIODICAL: Sb. statey. Leningr. in-t tochnoy mekhan. i optiki, 1958, No. 27, pp. 32-38

TEXT: Formulae are derived which connect the changes in the spherical aberation of concentric optical systems with the changes in the object position. It is assumed that the properties of the concentric system may be extended also to non-concentric systems with nearly equal properties of the images. There are 3 figures and 4 references. VB

K. I. Yu.

Translator's note: This is the full translation of the original Russian abstract.

Card 1/1

APPROVED FOR RELEASE: 08/25/2000 CIA-RDP86-00513R001446120013-9"

"APPROVED FOR RELEASE: 08/25/2000 CIA-RDP86-00513R001446120013-9

RUSINOV, M.M.

Selection of telephoto lenses. Sbor. st. po geod. no.11:39-42 '60. (MIRA 13:8)

(Lenses, Photographic)

APPROVED FOR RELEASE: 08/25/2000 CIA-RDP86-00513R001446120013-9"

"APPROVED FOR RELEASE: 08/25/2000 CIA-RDP86-00513R001446120013-9

RUSINOV, M.M.

Rectification expansion of panoramic aerial photographs. Sbor. st. po geod. no.11:43-48 '60. (MIRA 13:8)
(Rectifiers (Photogrammetry)

APPROVED FOR RELEASE: 08/25/2000 CIA-RDP86-00513R001446120013-9"

"APPROVED FOR RELEASE: 08/25/2000 CIA-RDP86-00513R001446120013-9

PHASE I BOOK EXPLOITATION SOV/4321
SOV/43-S-31

Moscow. Institut inzhenerov geodezii, aerofotos"yemki i kartografii

Trudy, vyp. 31 (Transactions of the Moscow Institute of Engineering Geodesy, Aerial Photography, and Cartography no. 31) Moscow, Geodezizdat, 1959. 163 p. Errata slip inserted. 1,000 copies printed.

Editorial Board: A.I. Mazmishvili (Resp. Ed.), V.I. Avgevich (Deputy Resp. Ed.), G.V. Bagratuni, N.Ya. Bobir, M.N. Volkov, A.I. Durnev, S.V. Yeliseyev, P.S. Zakatov, G.P. Levchuk, N.I. Modrinskiy, M.D. Solov'yev, B.V. Fefilov, and P.F. Shokin; Ed. of Publishing House: T.A. Shazarova; Tech. Ed.: V.V. Romanova.

PURPOSE: This collection of articles is intended for specialists in geodesy, cartography, and photogrammetry.

COVERAGE: The book is a collection of 20 papers presented at the MIIGAIK in October 1957 and printed in abbreviated form. The reports presented discuss the current status and the future prospects for development of aerial photography, topographic mapping, geodesy and geodetic astronomy, instrumentation, photogrammetry and photo interpretation, cartography and its associated mathematical and practical problems. No personalities are mentioned. References follow several of the articles.

Card 1/4

1. Baranov, A.N. 40 Years of Soviet Geodesy and Cartography 5

2. Romanovskiy, G.V. Results and Prospects of the Development of Aerial Photography in the USSR 11

3. Zakatov, P.S. Basic Problems of Higher Education in Geodesy in the USSR 15

4. Podobedov, N.S. Contemporary Topographic Maps and Methods for Improving Them 23

5. Velichko, V.A. Prospects of Using Location by Beams of Light for the Construction of Geodetic Grids 31

6. Kolupayev, A.P., A.N. Luzmanov, and A.T. Mazayev. State and Prospects of Development of Geodetic Astronomy 41

7. Shillinger, V.I. Present State and Prospects of Developments of Automatic-Leveling Instruments 49

8. Konshin, M.D. Determining the Elements of External Orientation in Flight 57

9. Rusinov, M.M. New Aerial-Photographic Lenses 63

10. Kargopolov, I.D. On the Rectification of Photogrammetric Networks 71

11. Gol'dman, L.M. Problems of Topographic Interpretation of Aerial Photographs 77

12. Mikhaylov, V.Ya. Effect of the Photographic Properties of Aerial Photographs on Their Interpretability 83

13. Starostin, F.A. Basic Methods for the Development of Mathematical Cartography 87

14. Koldayev, P.K. Ways and Means for Improving Plastic Representation of Relief on Maps 97

15. Zarutskiya, I.P. Cartographic Mapping Agricultural Areas in the USSR 103

16. Bordyukov, M.P. Electronic Cartographic Rectifier 113

17. Perikov, V.M. Plastic Foundations and Non-Silver Photosensitive Layers in Cartographic Production 117

18. Merkulov, V.A. Microfilming and the Possibilities of Its Use in Cartography 123

19. Ginzburg, G.A. Investigation of Certain Aspects of the Problem of the Mathematical Basis of Small-Scale Geographic Maps in the Transactions of the TsNIIGAIK 133

20. Solov'yev, M.D. Perspective Projections With Multiple-Image Perspectives 137

AVAILABLE: Library of Congress (ZB 275.M63, no. 31, 1959)

Card 2/2 AC/af/afm

Rusinov, M.M.

APPROVED FOR RELEASE: 08/25/2000 CIA-RDP86-00513R001446120013-9"

"APPROVED FOR RELEASE: 08/25/2000 CIA-RDP86-00513R001446120013-9

RUSINOV, M.M., doktor tekhnicheskikh nauk

Use of plates with aspherical surfaces between the exit pupil and the image. Geod.i kart. no.1:32-38 Ja '60. (MIRA 13:6)
(Cameras)

APPROVED FOR RELEASE: 08/25/2000 CIA-RDP86-00513R001446120013-9"

"APPROVED FOR RELEASE: 08/25/2000 CIA-RDP86-00513R001446120013-9

81559
S/146/60/003/03/10/0[illegible]
B019/B054

24.3900

AUTHOR: Rusinov, M. M.

TITLE: Astigmatism Caused by Puttied Surfaces

PERIODICAL: Izvestiya vysshikh uchebnykh zavedeniy. Priborostroyeniye, 1960, Vol. 3, No. 3, pp. 77 - 84

TEXT: In the present paper, the author investigates problems of correcting the astigmatism in optical systems with puttied surfaces. Formulas are derived which permit an evaluation of the influence of puttied surfaces in the case of large fields of view. On the basis of astigmatic invariants (1), the author shows that the influence of glued surfaces is strong on the border of the field of view, and relatively small in the center, if sin(i) (Fig. 1) becomes sufficiently large. For a plano-convex lens, the positions of the entrance pupil are investigated in which the astigmatism can be corrected. It is shown that the introduction of an anomalous puttying in plano-convex lenses increases the negative astigmatism. In meniscus lenses, it is convenient to use a normal puttying for far positions of the entrance pupil, and an anomalous

Card 1/2

APPROVED FOR RELEASE: 08/25/2000 CIA-RDP86-00513R001446120013-9"

"APPROVED FOR RELEASE: 08/25/2000 CIA-RDP86-00513R001446120013-9

puttying for close positions of the pupil. The wide-angle lens of the type ГОИ (GOI) (Ye. Yezhova) is considered as an example (Fig. 3). The lens works with a far distant entrance pupil, and possesses positive astigmatic zones. The aberration diagram is shown in Fig. 3. By introduction of a "normal" puttying, the positive zone of astigmatism can be fully eliminated (Fig. 4). The publication of this article was recommended by the Kafedra optikomekhanicheskikh priborov (Chair of Optic-mechanical Instruments). There are 5 figures and 1 Soviet reference.

ASSOCIATION: Leningradskiy institut tochnoy mekhaniki i optiki (Leningrad Institute of Precision Mechanics and Optics)

SUBMITTED: January 14, 1960

APPROVED FOR RELEASE: 08/25/2000 CIA-RDP86-00513R001446120013-9"

"APPROVED FOR RELEASE: 08/25/2000 CIA-RDP86-00513R001446120013-9

RUSINOV, M.M.

Transactions of the Laboratory (~~Cont.~~) of Aeromethods, AS USSR SOV/3815
V.7, Materials of 7th AU Interdept Conf. Aerial Survey (Dec 56), Moscow, 1959, 331pp.

Arzhanov, Ye.P. [Moscow Institute of Geodetic, Photogrammetric, and Cartographic Engineering].
New Methods of Flattening the Aerial Films 102

Romanovskiy, G.V. [Nauchno-issledovatel'skiy institut voyenno-topograficheskoy sluzhby, SA - Scientific-Research Institute of the Military Topography Service, SA].
The Present State and Future Prospects of Aerial Topographic Surveying in the USSR 107

Rusinov, M.M. [Leningradskiy institut tochnoy mekhaniki i optiki - Leningrad Institute of Precision Mechanics and Optics].
New Wide-Angle Lenses for Aerial Photography and Future Prospects of Development 114

Zhukov, G.P. [Scientific-Research Institute of the Military Topography Service, SA].
Photogrammetric Apparatus 121

Card 5/15

APPROVED FOR RELEASE: 08/25/2000 CIA-RDP86-00513R001446120013-9"

"APPROVED FOR RELEASE: 08/25/2000 CIA-RDP86-00513R001446120013-9

SOV/3866

PHASE I BOOK EXPLOITATION

Rusinov, Mikhail Mikhaylovich

Gabaritnyy raschet opticheskikh sistem (Dimensional Design of Optical Systems) [Riga] Geodezizdat, 1959. 257 p. Errata slip inserted. 2,500 copies printed.

Ed.: Ye.G. Yakhontov; Ed. of Publishing House: V. I. Vasil'yeva; Tech. Ed.: M. V. Botvinko.

PURPOSE: This book is intended for those working in the development of optical instruments and for students completing their work in optics at higher and intermediate technical institutes.

COVERAGE: The book is divided into four parts. The first part discusses the theory of optical devices necessary for an understanding of the remaining parts of the book. The second part discusses the summing of aberrations in an optical system which consists of a series of successively located and independently adjusted components. The third part discusses the dimensional design of optical devices and gives precise formulas which take into account the angle of beam refraction.

~~Card 1/8~~

[illegible] physics [illegible] The author thanks Pro- [illegible] and Ye.G. Yakhontov for their help in pre- [illegible] book. There are 8 references, all Soviet.

TABLE OF CONTENTS:

Preface 3

PART I. GENERAL ASPECTS FROM THE THEORY OF OPTICAL DEVICES

Ch. I. Fundamentals of the Theory of Collimation
1. Fundamental aspects. Rule of signs 5
2. Linear magnification. Principal planes. Foci distances. Newton's formula 6
3. Formula for segments of principal points. Angular and longitudinal magnification 10
4. Complex system. Telescopic system 14

~~Card 2/8~~

APPROVED FOR RELEASE: 08/25/2000 CIA-RDP86-00513R001446120013-9"

"APPROVED FOR RELEASE: 08/25/2000 CIA-RDP86-00513R001446120013-9

RUSINOV, M.M., doktor tekhn. nauk, prof.

New objectives for aerial cameras. Trudy MIIGAIK no.31:63-70 '59.
(MIRA 13:3)

1. Leningradskiy institut tochnoy mekhaniki i optiki.
(Lenses, Photographic)
(Aerial photogrammetry--Equipment and supplies)

APPROVED FOR RELEASE: 08/25/2000 CIA-RDP86-00513R001446120013-9"

"APPROVED FOR RELEASE: 08/25/2000 CIA-RDP86-00513R001446120013-9

24(4)

S/146/60/003/01/011/016
D002/D006

AUTHOR: Rusinov, M.M., Doctor of Technical Sciences, Professor

TITLE: On Some Characteristics of Positive Lenses 3

PERIODICAL: Izvestiya vysshikh uchebnykh zavedeniy. Priborostroyeniye, Vol 3, 1960, Nr 1, pp 77-89 (USSR)

ABSTRACT: This is a general discussion of the major characteristics of positive lenses with a wide visual field when considering two input-aperture positions, permitting the elimination of astigmatism at given field angles. The existence of large negative astigmatism zones for a close position of the input aperture is revealed, and of relatively small negative zones when the input aperture is farther away. Reference is made to the book by A.I. Tudorovskiy [Ref. 1] on the theory of optical devices. The article was recommended by the Kafedra optiko-mekhanicheskikh priborov (Chair of Optical and Mechanical Devices). There are 5 graphs (one on insert), and 1 Soviet reference.

Card 1/2

APPROVED FOR RELEASE: 08/25/2000 CIA-RDP86-00513R001446120013-9"

"APPROVED FOR RELEASE: 08/25/2000 CIA-RDP86-00513R001446120013-9

S/146/60/003/01/011/016
D002/D006

On Some Characteristics of Positive Lenses

ASSOCIATION: Leningradskiy institut tochnoy mekhaniki i optiki (Leningrad Institute of Precision Mechanics and Optics)

SUBMITTED: January 14, 1960

Card 2/2

APPROVED FOR RELEASE: 08/25/2000 CIA-RDP86-00513R001446120013-9"

"APPROVED FOR RELEASE: 08/25/2000 CIA-RDP86-00513R001446120013-9

24(4)

S/146/60/003/01/012/016
D002/D006

AUTHOR: Rusinov, M.M., Doctor of Technical Sciences, Professor

TITLE: On Some Characteristics of Lenses With Non-Spherical Second Order Surfaces

PERIODICAL: Izvestiya vysshikh uchebnykh zavedeniy. Priborostroyeniye, 1960, Vol 3, Nr 1, pp 90-96 (USSR)

ABSTRACT: This is a mathematical investigation of some lense characteristics, viz., of the relationships between the meridional and sagittal radii of second-order rotation surfaces and the superposition of apertures giving astigmatism corrections for the case of an infinitely distant object. The article was recommended by the Kafedra optiko-mekhanicheskikh priborov (Chair of Optical-Mechanical Devices). There is 1 graph.

ASSOCIATION: Leningradskiy institut tochnoy mekhaniki i optiki (Leningrad Institute of Precision Mechanics and Optics)

Card 1/2

APPROVED FOR RELEASE: 08/25/2000 CIA-RDP86-00513R001446120013-9"

"APPROVED FOR RELEASE: 08/25/2000 CIA-RDP86-00513R001446120013-9

S/146/60/003/01/012/016
D002/D006

On Some Characteristics of Lenses With Non-Spherical Second Order Surfaces

SUBMITTED: January 14, 1960

Card 2/2

APPROVED FOR RELEASE: 08/25/2000 CIA-RDP86-00513R001446120013-9"

"APPROVED FOR RELEASE: 08/25/2000 CIA-RDP86-00513R001446120013-9

RUSINOV, Mikhail Mikhaylovich. Prinimal uchastiye SLYUSAREV, G.G., prof., doktor fiziko-matem.nauk. YAKHONTOV, Ye.G., red.; VASIL'YEVA, V.I., red.izd-va; BOTVINKO, M.V., tekhn.red.

[Dimensional calculation of optical systems] Gabaritnyi raschet opticheskikh sistem. Izd-vo geodez.lit-ry, 1959. 257 p. (MIRA 13:4)

(Optics, Geometrical)

APPROVED FOR RELEASE: 08/25/2000 CIA-RDP86-00513R001446120013-9"

"APPROVED FOR RELEASE: 08/25/2000 CIA-RDP86-00513R001446120013-9

YELISEYEV, Sergey Vladimirovich, dotsent, kand.tekhn.nauk; RUSINOV, M.M., prof., retsenzent; MORDASOV, N.K., retsenzent; FEFILOV, B.V., prof., retsenzent; SIKACHEV, V.A., red.; KHROMCHENKO, F.I., red. izd-va; ROMANOVA, V.V., tekhn.red.

[Geodetic instruments and apparatus; principles of calculation and design and specific features of manufacture] Geodezicheskie instrumenty i pribory; osnovy rascheta, konstruktsii i osobennosti izgotovleniia. Izd.2., perer. i dop. Moskva, Izd-vo geodez.lit-ry, 1959. 478 p. (MIRA 13:4)

1. Kafedra optiko-mekhanicheskikh priborov Leningradskogo instituta tochnoy mekhaniki i optiki (LITMO) (for Rusinov).
(Surveying--Instruments)

APPROVED FOR RELEASE: 08/25/2000 CIA-RDP86-00513R001446120013-9"

"APPROVED FOR RELEASE: 08/25/2000 CIA-RDP86-00513R001446120013-9

RUSINOV, M.M.

Modern wide-angle aerial photogrammetric optics and immediate prospects for its development. Trudy Lab.aeromet. 7:114-120 '59. (MIRA 13:1)

1. Leningradskiy institut tochnoy mekhaniki i optiki.
(Aerial photogrammetry)

APPROVED FOR RELEASE: 08/25/2000 CIA-RDP86-00513R001446120013-9"

"APPROVED FOR RELEASE: 08/25/2000 CIA-RDP86-00513R001446120013-9

SOV/6-60-1-6/17

3(4), 24(4)

AUTHOR: Rusinov, M. M., Doctor of Technical Sciences

TITLE: On the Use of a Plate With Nonspherical Surface Between the Exit Pupil and the Image

PERIODICAL: Geodeziya i kartografiya, 1960, Nr 1, pp 32-38 (USSR)

ABSTRACT: Plates with nonspherical surface have recently been used more and more in optical systems. In Shmidt's mirror system, there is such a correction plate in the entrance pupil. Professor V. N. Churilovskiy suggested the use of so-called "planoid" (planoidnyy) mirrors in astronomical reflecting lenses. The author (Ref, Footnote p 32) described the case of distortion correction by means of a plate with deformed surface. Here, the author studies the use of a correction plate with non-spherical surface between the exit pupil and the image plane. At first, formula (29) is derived for $\Delta y''$ (change in distortion with the use of a correction plate). It shows that the re-fracting surface, which is rather distant from the image plane, is influenced by the amount of the angle of inclination of the curve. This amount will not exert a noticeable influence on a nonspherical surface near the image. Formula (32) is derived

Card 1/2

APPROVED FOR RELEASE: 08/25/2000 CIA-RDP86-00513R001446120013-9"

"APPROVED FOR RELEASE: 08/25/2000 CIA-RDP86-00513R001446120013-9

SOV/6-60-1-6/17

On the Use of a Plate With Nonspherical Surface Between the Exit Pupil and the Image

for the case where the image plane lies in infinity. In this case, the deformation of the plate surface does not directly influence distortion. Here, the distortion is determined by the angle between the y-axis and the tangent on the deformed surface in the point where the ray is refracted. Next, the astigmatism caused by the correction plate with nonspherical surface is investigated. In conclusion, it is stated on the strength of the two formulas (29) and (32) that it is not always possible to locate the correction plate with deformed surface near the image. Formulas (40), (41), and (52), derived for the special case where the generatrix of the deformed surface is a parabola of 4th order, show as follows: At given position of s_0' (distance between plate and image plane), of the deformed surface, of the field of vision, and of the amount of distortion to be corrected, the coefficient A is clearly defined. Therefore, the radii of curvature causing the change in astigmatism (caused by the deformed surface) will have quite a definite length. Formulas (43), (44), and (50)-(53) permit the solution of the inverted problem. In this case, the correction plate with deformed surface is used to correct the astigmatism. There are 4 figures and 1 Soviet reference.

Card 2/2

APPROVED FOR RELEASE: 08/25/2000 CIA-RDP86-00513R001446120013-9"

"APPROVED FOR RELEASE: 08/25/2000 CIA-RDP86-00513R001446120013-9

MINIOVICH, David Semenovich [deceased]; RUSINOV, M.M., prof., doktor tekhn.nauk, nauchnyy red.; SHAKHOV, A.I., inzh., nauchnyy red.; KUSKOVA, A.I., red.; KOROVENKO, Yu.N., tekhn.red.

[Photogrammetry in building and in the repair of ships] Fotogrammetricheskii metod v sudostroenii i sudoremonte. Nauchn. red.M.M.Rusinov i A.I.Shakhov. Leningrad, Gos.soiuznoe izd-vo sudostroit.promyshl., 1960. 132 p. (MIRA 14:1)

(Photogrammetry) (Shipbuilding)
(Ships--Maintenance and repair)

APPROVED FOR RELEASE: 08/25/2000 CIA-RDP86-00513R001446120013-9"

"APPROVED FOR RELEASE: 08/25/2000 CIA-RDP86-00513R001446120013-9

RUSINOV, M.M.

Effect of a glued surface on spherical aberration. Izv.vys.ucheb. zav.; prib. 3 no.4:59-68 '60. (MIRA 13:9)

1. Leningradskiy institut tochnoy mekhaniki i optiki. Rekom. kafedroy optiko-mekhanicheskikh pribotov.
(Aberration)

APPROVED FOR RELEASE: 08/25/2000 CIA-RDP86-00513R001446120013-9"

"APPROVED FOR RELEASE: 08/25/2000 CIA-RDP86-00513R001446120013-9

86349

S/146/60/003/005/013/017
B019/B054

9.5300

AUTHOR: Rusinov, M. M.

TITLE: The Invariant for the Meridional Coma of a Spherical Surface of Refraction

PERIODICAL: Izvestiya vysshikh uchebnykh zavedeniy. Priborostroyeniye, 1960, Vol. 3, No. 5, pp. 106 - 109

TEXT: With reference to Fig.1, the author derived the following relation

$$dt/di = \frac{\frac{R}{t}\cos i + \sin i}{\frac{\cos i}{t} - \frac{1}{r}} \quad (13).$$

This relation likewise holds for spatial representation. Further, the author gives the meridional invariant

$$\frac{n'\cos^2 i'}{t'} - \frac{n'\cos i'}{r} = \frac{n\cos^2 i}{t} - \frac{n\cos i}{r} \quad (15).$$

The following expression is obtained by an extensive calculation:

Card 1/3

APPROVED FOR RELEASE: 08/25/2000 CIA-RDP86-00513R001446120013-9"

"APPROVED FOR RELEASE: 08/25/2000 CIA-RDP86-00513R001446120013-9

86349

The Invariant for the Meridional Coma of a Spherical Surface of Refraction

S/146/60/003/005/013/017
B019/B054

$$\frac{\cos^3 i'}{t'^3} \cdot \frac{R'}{\sin i'} + 3\left(\frac{\cos e''}{t'} - \frac{1}{r}\right)\frac{\cos i'}{t'}$$

$$= \frac{\cos^3 i}{t^3} \cdot \frac{R}{\sin i} + 3\left(\frac{\cos i}{t} - \frac{1}{r}\right)\frac{\cos i}{t} \quad (28).$$

The primed quantities refer to the spatial representation. The publication of this article was recommended by the Kafedra optiko-mekhanicheskikh priborov (Chair of Optical and Mechanical Instruments). There are 1 figure and 1 Soviet reference.

ASSOCIATION: Leningradskiy institut tochnoy mekhaniki i optiki (Leningrad Institute of Precision Mechanics and Optics)

SUBMITTED: January 14, 1960

Card 2/3

APPROVED FOR RELEASE: 08/25/2000 CIA-RDP86-00513R001446120013-9"

"APPROVED FOR RELEASE: 08/25/2000 CIA-RDP86-00513R001446120013-9

86349

S/146/60/003/005/013/017
B019/B054

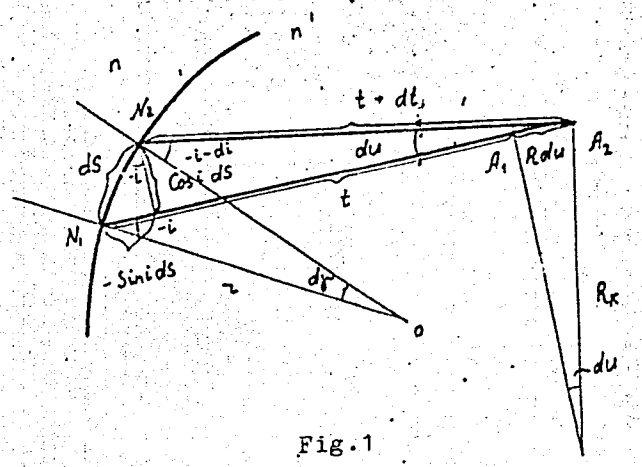

Fig. 1
Фиг. 1

Card 3/3

APPROVED FOR RELEASE: 08/25/2000 CIA-RDP86-00513R001446120013-9"

"APPROVED FOR RELEASE: 08/25/2000 CIA-RDP86-00513R001446120013-9

RUSINOV, Mikhail Mikhaylovich; YAKHONTOV, Ye.G., red.; VASIL'YEVA, V.I., red.izd-va; ROMANOVA, V.V., tekhn. red.

[Dimension calculations of optical systems] Gabaritnye raschety opticheskikh sistem. 2., perer. izd. Moskva, Gosgeoltekhizdat, 1963. 399 p. (MIRA 17:3)

APPROVED FOR RELEASE: 08/25/2000 CIA-RDP86-00513R001446120013-9"

"APPROVED FOR RELEASE: 08/25/2000 CIA-RDP86-00513R001446120013-9

RUSINOV, M.N.

Rated method for making die-casting molds. Mashinostroitel' no.9:21 S '60. (MIRA 13:9)

(Molding (Founding))

APPROVED FOR RELEASE: 08/25/2000 CIA-RDP86-00513R001446120013-9"

"APPROVED FOR RELEASE: 08/25/2000 CIA-RDP86-00513R001446120013-9

BUCHKOV, N.

"The calculation report as a means for strengthening the workshop cost accounting in the industrial combines."

p. 6. (Leka Promishlenost, Vol. 7, No. 7, 1958, Sofiia, Bulgaria)

Monthly Index of East European Accessions (EEAI) LC, Vol. 7, No. 12, Dec 58

APPROVED FOR RELEASE: 08/25/2000 CIA-RDP86-00513R001446120013-9"

"APPROVED FOR RELEASE: 08/25/2000 CIA-RDP86-00513R001446120013-9

SKRIPOV, V.P.; RUSINOV, N.Ya.

Distribution of heavy water between liquid phases in a solution of triethylamine - light water - heavy water divided into layers. Nauch.dokl.vys.shkoly; khim. i khim.tekh. no.2:250-252 '59. (MIRA 12:8)

1. Predstavlena kafedroy teoreticheskoy fiziki Ural'skogo politekhnicheskogo instituta im. S.M.Kirova.
(Deuterium oxide) (Systems (Chemistry))

APPROVED FOR RELEASE: 08/25/2000 CIA-RDP86-00513R001446120013-9"

"APPROVED FOR RELEASE: 08/25/2000 CIA-RDP86-00513R001446120013-9

21(1), 5(4) SOV/156-59-2-7/48

AUTHORS: Skripov, V. P., Rusinov, N. Ya.

TITLE: The Distribution of the Heavy Water Between the Liquid Phases in the StratifiedSolution Triethylamine - Light Water - Heavy Water (Raspredeleniye tyazheloy vody mezhdu zhidkimi fazami v rasslaivayushchemsya rastvore trietilamin - legkaya voda - tyazhelaya voda)

PERIODICAL: Nauchnyye doklady vysshey shkoly. Khimiya i khimicheskaya tekhnologiya, 1959, Nr 2, pp 250-252 (USSR)

ABSTRACT: The distribution coefficient of heavy water between the upper and lower layer of an unmixed solution of triethylamine cooled below the critical temperature is given by a table and amounts to $\alpha = 1.01$. The pycnometric determination of the content of heavy water and the purification of water from triethylamine residuals by repeated unmixing at 72°, filtration through active coal and distillation repeated by 5 times, as well as purity test of water by measuring the electric conductivity are described in detail. Similar investigations carried out in the USA are mentioned (Ref 4). The difference between the value found by the authors ($\alpha = 1.01$) and that found in the USA ($\alpha = 1.04$) is explained by the different

Card 1/2

APPROVED FOR RELEASE: 08/25/2000 CIA-RDP86-00513R001446120013-9"

"APPROVED FOR RELEASE: 08/25/2000 CIA-RDP86-00513R001446120013-9

SOV/156-59-2-7/48

The Distribution of the Heavy Water Between the Liquid Phases in the Stratified Solution Triethylamine - Light Water - Heavy Water

type of the experimental order. The result of the thermodynamical analysis on the basis of the generalized Clapeyron-Clausius equation amounts for α to 1.005. Taking into account the further terms of the equation with the differential quotient of the chemical potential of the components leads to a higher α-value; it was, however, not possible as a result of inadequate experimental data. There are 1 table and 4 references, 3 of which are Soviet.

PRESENTED BY: Kafedra teoreticheskoy fiziki Ural'skogo politekhnicheskogo instituta im. S. M. Kirova (Chair of Theoretical Physics, Ural Polytechnic Institute imeni S. M. Kirov)

SUBMITTED: September 22, 1958

Card 2/2

APPROVED FOR RELEASE: 08/25/2000 CIA-RDP86-00513R001446120013-9"

"APPROVED FOR RELEASE: 08/25/2000 CIA-RDP86-00513R001446120013-9

RUSINOV, P. (Podol'sk)

Use of returnable wooden containers. Sov.torg. 33 no.3:51 Mr '60. (MIRA 13:6)

(Containers)

APPROVED FOR RELEASE: 08/25/2000 CIA-RDP86-00513R001446120013-9"

"APPROVED FOR RELEASE: 08/25/2000 CIA-RDP86-00513R001446120013-9

RUSINOV, P.

AGRICULTURE

Periodical: OTCHETNOST I KONTROL NA SELSKOTO STOPANSTVO. Vol. 3, No. 7, 1958.

RUSINOV, P. Strict control in financial expenditures. p. 289.

Monthly List of East European Accessions (EEAI), LC. Vol. 8, No. 2
February 1959, unclass.

Monthly List of East European Accessions (EEAI)

APPROVED FOR RELEASE: 08/25/2000 CIA-RDP86-00513R001446120013-9"

"APPROVED FOR RELEASE: 08/25/2000 CIA-RDP86-00513R001446120013-9

APPROVED FOR RELEASE: 08/25/2000 CIA-RDP86-00513R001446120013-9"

"APPROVED FOR RELEASE: 08/25/2000 CIA-RDP86-00513R001446120013-9

RUSINOV, P.R.

Comparing mechanical characteristics of flat and round test pieces.
Zav.lab. 22 no.10:1225-1227 '56. (MLRA 10:5)
(Metals--Testing)

APPROVED FOR RELEASE: 08/25/2000 CIA-RDP86-00513R001446120013-9"

"APPROVED FOR RELEASE: 08/25/2000 CIA-RDP86-00513R001446120013-9

24164

S/032/61/027/005/010/017
B130/B220

18.8200 also 2807

AUTHOR: Rusinov, P. R.

TITLE: Tensile tests at temperatures up to 1200°C

PERIODICAL: Zavodskaya laboratoriya, v. 27, no. 5, 1961, 591 - 595

TEXT: Suggestions are made for tensile tests at high temperatures (1200-1220°C). It has been proved that a machine ensuring low elongation rates has to be chosen for these tests. (Elongation rate 2 mm/min). The tests should be made with specimens of 6 mm diameter and 30 mm length. The heating of the specimens is performed in an electric resistance furnace ensuring a uniform heating of the specimen. Two possibilities were examined for the heating: on the one hand direct electric heating, on the other hand heating in an electric resistance furnace. The first method was discarded, however, because the specimen is not heated uniformly. Then, the tests were continued by using furnaces having an internal diameter of 32 mm and a height of 160 - 180 mm. The length of the specimen amounts then merely to 1/5 - 1/6 of the length of the furnace. Thus, it is achieved that the temperature difference of the specimen amounts to ± 4°C for

Card 1/3

APPROVED FOR RELEASE: 08/25/2000 CIA-RDP86-00513R001446120013-9"

"APPROVED FOR RELEASE: 08/25/2000 CIA-RDP86-00513R001446120013-9

24164

S/032/61/027/005/010/017
B130/B220

Tensile tests at...

heating up to 900°C and to ± 6°C for heating over 900°C. Chips of cast iron are used for the heating up to 900°C to protect the surface against oxidation. Boric acid is used to obtain a protecting film and, thus, achieve better results. The specimen is heated up to 320 - 340°C and immersed into boric acid. The film formed remains elastic also at elevated temperatures and protects the surface of the specimen. At a temperature of 750 - 800°C the surface of the specimen kept the light grey color that it had at 340°C. At temperatures surpassing 850 - 900°C the surface became speckled. Graphite powder was used for temperatures of more than 900°C. Commercial argon containing 0.3 - 0.4 % O_2, 14 - 16 % N_2, and 0.08 % CO_2 was used for temperatures between 1200 and 1220°C. The blowing of nitrogen through the furnace gave no satisfactory results. Good results were obtained with the use of argon and cast iron chips or argon and graphite; this was proved by metallographical analyses of specimens of low-alloyed steel used for ship-building. The thickness of the scale was insignificant in all cases and did not exceed 0.005 mm. Graphite and argon produced the thinnest oxidation film (0.002 - 0.003 mm), argon the thickest (0.004 - 0.005 mm). An oxidation film of 0.003 - 0.004 mm forms

Card 2/3

APPROVED FOR RELEASE: 08/25/2000 CIA-RDP86-00513R001446120013-9"

"APPROVED FOR RELEASE: 08/25/2000 CIA-RDP86-00513R001446120013-9

24164
S/032/61/027/005/010/017
B130/B220

Tensile tests at...

with the use of cast iron chips. The use of argon results in a heavy decarburization of the surface, whereas graphite produces a better surface. The carbon content of the surface seems to increase, when argon and cast iron chips are used. There are 1 figure and 3 tables.

Card 3/3

APPROVED FOR RELEASE: 08/25/2000 CIA-RDP86-00513R001446120013-9"

"APPROVED FOR RELEASE: 08/25/2000 CIA-RDP86-00513R001446120013-9

L 39691-66 EWT(1)/EWT(m)/T WW/WE/GD-2

ACC NR: AP6009725 SOURCE CODE: UR/0114/66/000/003/0019/0021

AUTHOR: Rusinov, R. V. (Candidate of technical sciences); Lavrova, M. A. (Engineer)

ORG: none

TITLE: Calculating the hydraulic characteristics of fuel-injection nozzles in diesels

SOURCE: Energomashinostroyeniye, no. 3, 1966, 19-21

TOPIC TAGS: diesel engine, fuel nozzle

ABSTRACT: The hydraulic characteristic of an injection nozzle expressed as a function of the total effective cross-section of nozzle ports depending on the pin lift is developed analytically for two nozzle designs (see figure). The characteristic is described by this formula:

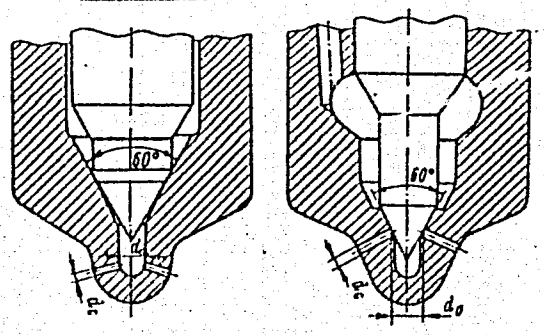

Ports at the central channel — Ports at the pin cone

Fuel-injection nozzles

Card 1/2 UDC: 621.43.037.001.24

APPROVED FOR RELEASE: 08/25/2000 CIA-RDP86-00513R001446120013-9"

"APPROVED FOR RELEASE: 08/25/2000 CIA-RDP86-00513R001446120013-9

L 39691-66

ACC NR: AP6009725

$$\mu/_c = \frac{\pi}{2} \cdot \frac{\mu_\kappa\left(d_0 - \frac{\sqrt{3}}{4} h_u\right) h_u}{\sqrt{1 + \frac{4\left[\mu_\kappa\left(d_0 - \frac{\sqrt{3}}{4} h_u\right) h_u\right]^2}{(\mu_c d_c^2 n)^2}}}.$$

Two numerical examples illustrate the use of this formula which is claimed to be suitable for calculating the fuel-supply process on a computer. Orig. art. has: 5 figures, 18 formulas, and 2 tables.

SUB CODE 21 / SUBM DATE: none / ORIG REF: 002

Card 2/2

APPROVED FOR RELEASE: 08/25/2000 CIA-RDP86-00513R001446120013-9"

"APPROVED FOR RELEASE: 08/25/2000 CIA-RDP86-00513R001446120013-9

ACCESSION NR: AR4034727 S/0124/64/000/003/B049/B049

SOURCE: Ref. zh. Mekhan., Abs. 3B291

AUTHOR: Rusinov, R. V.

TITLE: Determining the parameters of an exhaust-scavengeing system of a double-stroke diesel

CITED SOURCE: Tr. Novocherk. politekhn. in-ta, v. 148, 1963, 109-115

TOPIC TAGS: diesel engines, diesel engine design, mathematical calculation, scavengeing system

TRANSLATION: An analysis of a earlier solution by the author of a differential equation of the fluctuating process of the filling of a double-stroke diesel is given. An expression is proposed for determining the most advantageous geometric functions of the gas tract, which provide for the filling of the cylinder. The results of calculation for one engine are compared with actual data, and the calculated curves of pressure-change during the period of the exhaust-scavengeing process are compared with the experimental curves.

Card 1/2

APPROVED FOR RELEASE: 08/25/2000 CIA-RDP86-00513R001446120013-9"

"APPROVED FOR RELEASE: 08/25/2000 CIA-RDP86-00513R001446120013-9

ACCESSION NR: AR4034727

DATE ACQ: 02Apr64 SUB CODE: AI, MM ENCL: 00

Card 2/2

APPROVED FOR RELEASE: 08/25/2000 CIA-RDP86-00513R001446120013-9"

"APPROVED FOR RELEASE: 08/25/2000 CIA-RDP86-00513R001446120013-9

RUSINOV, R.V., kand. tekhn. nauk

Concerning A.S. Lyshevskii's book "Fuel atomization processes in diesel jets." Energomashinostroenie 10 no.4: 47-48 Ap '64. (MIRA 17:6)

APPROVED FOR RELEASE: 08/25/2000 CIA-RDP86-00513R001446120013-9"

"APPROVED FOR RELEASE: 08/25/2000 CIA-RDP86-00513R001446120013-9

RUSHNOV, R.V.

Reviewing standards for fuel systems of diesel engines. Standartizatsiia 26 no.5:30-34 My '62. (MIRA 15:7)
(Diesel engines—Fuel systems)

APPROVED FOR RELEASE: 08/25/2000 CIA-RDP86-00513R001446120013-9"

"APPROVED FOR RELEASE: 08/25/2000 CIA-RDP86-00513R001446120013-9

RUSINOV, R.V., AKIMOV, P.F., prof., retsenzent

[Design and construction of diesel engine fuel equipment] Konstruktsiia i raschet dizel'noi topliwnoi apparatury. Moskva, Mashinostroenie, 1965. 125 p. (MIRA 18:2)

APPROVED FOR RELEASE: 08/25/2000 CIA-RDP86-00513R001446120013-9"

"APPROVED FOR RELEASE: 08/25/2000 CIA-RDP86-00513R001446120013-9

RUSINOV, R.V., kand.tekhn.nauk

Fuel system equipment for diesel engines with fuel injection. Energomashinostroenie 8 no.10:22-25 O '62. (MIRA 15:11)

(Diesel engines—Fuel systems)

APPROVED FOR RELEASE: 08/25/2000 CIA-RDP86-00513R001446120013-9"

"APPROVED FOR RELEASE: 08/25/2000 CIA-RDP86-00513R001446120013-9

RUSINOV, R.V.; PAVLOVA, V.M.

Standardization of hydraulic tests of diesel engine sprayers. Standartizatsiia 28 no.3:16-19 Mr'64. (MIRA 17:5)

APPROVED FOR RELEASE: 08/25/2000 CIA-RDP86-00513R001446120013-9"