"APPROVED FOR RELEASE: 08/25/2000 CIA-RDP86-00513R001446120018-4

BALATSKIY, L.T.; RUSNAK, N.T.

New method for making bushings of rod brass. Mashinostroitel' no.8:23 Ag '60. (MIRA 13:9)

(Machine-shop practice)

APPROVED FOR RELEASE: 08/25/2000 CIA-RDP86-00513R001446120018-4"

"APPROVED FOR RELEASE: 08/25/2000 CIA-RDP86-00513R001446120018-4

RUSNAK, N.T.

Drill chuck with a safety device. Stan.i instr. 31 no.7:36 Jl '60. (MIRA 13:7)
(Chucks)

APPROVED FOR RELEASE: 08/25/2000 CIA-RDP86-00513R001446120018-4"

"APPROVED FOR RELEASE: 08/25/2000 CIA-RDP86-00513R001446120018-4

RUSNAK, N.T.

123 - 1 - 150 D

Translation from: Referativnyy Zhurnal, Mashinostroyeniye, 1957, Nr 1, p. 25 (USSR)

AUTHOR: Rusnak, N.T.

TITLE: Research on Cast and Babbit Lined Friction Joints in Marine Machinery (Issledovaniye litykh i naplavlennykh babbitov uzlov treniya sudovykh mekhanizmov)

ABSTRACT: Bibliographic entry on the author's dissertation for the degree of Candidate of Technical Sciences, presented to the Odessa Polytechnical Institute (Odessa politekhn.in-t), Odessa, 1956

ASSOCIATION: Odessa Polytechnical Institute (Odessa politekhn.in-t)

Card 1/1

APPROVED FOR RELEASE: 08/25/2000 CIA-RDP86-00513R001446120018-4"

"APPROVED FOR RELEASE: 08/25/2000 CIA-RDP86-00513R001446120018-4

RUSNAK, N.T., kand.tekhn.nauk; SOLYANOV, A.Ya., inzh.

Testing of cast anchor chains. Sudostroenie 30 no.1:15-16 Ja '64. (MIRA 17:3)

APPROVED FOR RELEASE: 08/25/2000 CIA-RDP86-00513R001446120018-4"

"APPROVED FOR RELEASE: 08/25/2000 CIA-RDP86-00513R001446120018-4

BOGUN, A.F.; RUSNAK, N.T.; ANDREYEVA, L.S., red.; LAVRENOVA, N.B., tekhn.red.

[Organization and mechanization of docking operations] Opyt organizatsii i mekhanizatsii dokovykh rabot. Moskva, Izd-vo "Morskoi transport," 1959. 100 p. (MIRA 13:2)
(Ships--Maintenance and repair) (Dry docks)

APPROVED FOR RELEASE: 08/25/2000 CIA-RDP86-00513R001446120018-4"

"APPROVED FOR RELEASE: 08/25/2000 CIA-RDP86-00513R001446120018-4

RUSNAK, N. T.

Rusnak, N. T. "Investigation of cast and built-up babbits for the friction points of ship machinery." Min Higher Education Ukrainian SSR. Odessa Polytechnic Inst. Odessa, 1956. (Dissertation for the Degree of Candidate in Technical Science)

So: Knizhnaya letopis', No. 27, 1956. Moscow. Pages 94-109; 111.

APPROVED FOR RELEASE: 08/25/2000 CIA-RDP86-00513R001446120018-4"

"APPROVED FOR RELEASE: 08/25/2000 CIA-RDP86-00513R001446120018-4

RUSNAK, N.T., kand.tekhn.nauk; SOLYANOV, A.Ya., inzh.

Reducing the weight of anchor chains by means of improving the shape of links. Sudostroenie 29 no.4:23-25 Ap '63. (MIRA 16:4)
(Anchors)

APPROVED FOR RELEASE: 08/25/2000 CIA-RDP86-00513R001446120018-4"

"APPROVED FOR RELEASE: 08/25/2000 CIA-RDP86-00513R001446120018-4

KHRENNIKOVA, Vera Yevgen'yevna[Khriennikova, V.IE.]; VOPYLKIN, Vadim Alekseyevich[Vopylkin, V.O.]; RUSNAK, Nikolay Terent'yevich; SEVASTOPOL'SKIY, Natan Ottovich [Sevastopol's'kyi, N.O.]; YURCHENKO, P.M., red.

[Use of the State Standards for mechanical drawing in schools; aid for teachers] Zastosuvannia kresliars'kykh HOSTiv u shkoli; posibnykh dlia vchyteliv. Kiev, Radians'ka shkola, 1964. 48 p. (MIRA 18:1)

APPROVED FOR RELEASE: 08/25/2000 CIA-RDP86-00513R001446120018-4"

"APPROVED FOR RELEASE: 08/25/2000 CIA-RDP86-00513R001446120018-4

RUSNAK, N.Ye., veterinarnyy vrach.

Hemotherapy for diplococcus septicemia in young calves. Veterinariia 31 no.12:32-33 D '54. (MLRA 7:12)
(SEPTICEMIA) (CALVES--DISEASES) (BLOOD AS FOOD OR MEDICINE)

APPROVED FOR RELEASE: 08/25/2000 CIA-RDP86-00513R001446120018-4"

"APPROVED FOR RELEASE: 08/25/2000 CIA-RDP86-00513R001446120018-4

RUSNAK, Pavel, promovany ekonom

Problems of operation management. Zel dop tech 12 no.12:324-325 '64.

1. Head of the Section of Operations, Kosice.

APPROVED FOR RELEASE: 08/25/2000 CIA-RDP86-00513R001446120018-4"

"APPROVED FOR RELEASE: 08/25/2000 CIA-RDP86-00513R001446120018-4

RUSNAK, Pavel, promovany ekonom

Problem of economic effectiveness of electric railroads.
Zelez dop tech 9 no.11:330-332 '61.

APPROVED FOR RELEASE: 08/25/2000 CIA-RDP86-00513R001446120018-4"

"APPROVED FOR RELEASE: 08/25/2000 CIA-RDP86-00513R001446120018-4

RUSNAK, ST.
J. V. DUBSKY, Chem. Listy 33, 346-52, 1939

APPROVED FOR RELEASE: 08/25/2000 CIA-RDP86-00513R001446120018-4"

"APPROVED FOR RELEASE: 08/25/2000 CIA-RDP86-00513R001446120018-4

RUSNAK, Stepan

Modified method for determining directly reacting bilirubin in the blood. Scr. med. fac. med. Brunensis 36 no.1/2:47-54 '63.

1. Katedra lekarske chemie lekarske fakulty UJEP v Brne Prednosta: prof. dr. O. Wagner.
(BILIRUBIN) (BLOOD CHEMICAL ANALYSIS)
(AZO COMPOUNDS)

APPROVED FOR RELEASE: 08/25/2000 CIA-RDP86-00513R001446120018-4"

"APPROVED FOR RELEASE: 08/25/2000 CIA-RDP86-00513R001446120018-4

RUSNAK, Vladimir, inz.; PETROVIC, Jan, inz.; KOSTIHA, Frantisek

Apparatus for preparing pure solvents. Chem zvesti 19 no.5: 424 426 '65.

1. Institute of Inorganic Chemistry of the Slovak Academy of Sciences, Bratislava, Dubravska cesta (for Rusnak and Petrovic).
2. Development Center of the Institute of Chemistry of the Slovak Academy of Sciences, Bratislava, Dubravske cesta. Submitted October 6, 1964.

APPROVED FOR RELEASE: 08/25/2000 CIA-RDP86-00513R001446120018-4"

"APPROVED FOR RELEASE: 08/25/2000 CIA-RDP86-00513R001446120018-4

L 21334-66 T

ACCESSION NR: AP5025534 CZ/0043/65/000/005/0424/0426

AUTHOR: Rusnak, V. (Engineer); Petrovic, J. (Petrovich, Ya.) (Engineer, Candidate of sciences); Kostiha, F. (Kostiga, F.)

15
B

TITLE: Apparatus for the preparation of pure solvents

SOURCE: Chemicke zvesti, no. 5, 1965,424-426

TOPIC TAGS: chemical laboratory apparatus, chemical engineering

ABSTRACT: The apparatus is designed for laboratory use, and made of glass. The solvent is heated in a vessel provided with a reflux condenser, and a chemically active agent that can purify the solvent is added. After a desired reaction period the solvent is distilled out of the vessel by simply changing the position of a valve. Overheating of the liquid is prevented by bubbling an inert gas through the boiling liquid. The apparatus is designed for work with a selected gas atmosphere. Orig. art. has: 1 figure.

ASSOCIATION: Ustav Anorganickej Chemie Slovenskej Akademie Vied, Bratislava (Institute of Inorganic Chemistry, Slovak Academy of Sciences) Vyvojove Stredisko pri Chemickom Ustave Slovenskej Akademie Vied, Bratislava (Development Center at the Chemical Institute of the Slovak Academy of Sciences)

Card 1/2

APPROVED FOR RELEASE: 08/25/2000 CIA-RDP86-00513R001446120018-4"

"APPROVED FOR RELEASE: 08/25/2000 CIA-RDP86-00513R001446120018-4

L 21334-66

ACCESSION NR: AP5025534

SUBMITTED: 06Oct64 ENCL: 00 SUB CODE: GC

NR REF SOV: 000 OTHER: 002 JPRS

Card 2/2

APPROVED FOR RELEASE: 08/25/2000 CIA-RDP86-00513R001446120018-4"

"APPROVED FOR RELEASE: 08/25/2000 CIA-RDP86-00513R001446120018-4

STRANSKY, Karel; RUSNAK, Zdenek

Statistical evaluation of the effect of technology on mechanical properties of cast steel. Slevarenstvi 10 no.2:48-49 F '62

APPROVED FOR RELEASE: 08/25/2000 CIA-RDP86-00513R001446120018-4"

"APPROVED FOR RELEASE: 08/25/2000 CIA-RDP86-00513R001446120018-4

L 13221-66

ACC NR: AP6006077 SOURCE CODE: CZ/0053/65/014/004/0310/0310

AUTHOR: Rusnakova, M.; Rusnak, J.; Kovalcik, V.

ORG: Department of Pharmacology, Medical Faculty, Comenius University, Bratislava

TITLE: Effect of some synthetic polypeptides on the isolated atrium [This paper was presented during the Twelfth Pharmacologic Days, Smolenice, 28 Jan 65.]

SOURCE: Ceskoslovenska fysiologie, v. 14, no. 4, 1965, 310

TOPIC TAGS: rabbit, rat, cardiovascular system, pharmacology, drug effect, amino acid

ABSTRACT: Study of perfused spontaneously beating rabbit and rat atria revealed that angiotensin 10^{-5}M has positive inotropic without negative chronotropic effects; tachyphylaxis develops. Bradykinin and eledoizin 2×10^{-8} had no effect on the contractile force or frequency. [JPRS]

SUB CODE: 06 / SUBM DATE: none / ORIG REF: 001

Card 1/1

APPROVED FOR RELEASE: 08/25/2000 CIA-RDP86-00513R001446120018-4"

"APPROVED FOR RELEASE: 08/25/2000 CIA-RDP86-00513R001446120018-4

SULICA, M., Dr.; DECANOVICI, I., dr.; KOKAY, L., dr.; RUSNEAC, V., dr.

Study of the effect of natural lighting of classrooms on vision of the students. Rev. igiena microb. epidem., Bucur. Vol.3:71-78 July-Sept 55.

1. Institutul de igiena al R. P. R., filiala Cluj, sectia igiena scolara, sanepidul regional Cluj, sectia de igiena scolara, spitalul unificat de sn copii Cluj, serviciul de oftalmologie.

(VISION
of school child., eff. of lighting of classrooms, survey of Rumanian students.

(ILLUMINATION
of classrooms, eff. on vision of child., survey of Rumanian students.

APPROVED FOR RELEASE: 08/25/2000 CIA-RDP86-00513R001446120018-4"

"APPROVED FOR RELEASE: 08/25/2000 CIA-RDP86-00513R001446120018-4

F

A

3593. RULES FOR USE OF WINDING ROPES. Rusnak, F. (Przegl. Górniczy (Min. Rev.), June 1951, vol. 7, 242-245). (L).

APPROVED FOR RELEASE: 08/25/2000 CIA-RDP86-00513R001446120018-4"

"APPROVED FOR RELEASE: 08/25/2000 CIA-RDP86-00513R001446120018-4

RUSNITSKIY, A. A.: PANTELEYMONOV, L. A.: PIMENOVA, V. V.: BEREZKINA, M. YE.

Cobalt

Solubility of copper in cobalt in a solid state. Vest. Mosk. un. 7 No. 3, 1952.

9. Monthly List of Russian Accessions, Library of Congress, October, 1952 1953. Unclassified.

APPROVED FOR RELEASE: 08/25/2000 CIA-RDP86-00513R001446120018-4"

"APPROVED FOR RELEASE: 08/25/2000 CIA-RDP86-00513R001446120018-4

RUSNOK, Boguslaw, mgr. inz.

Achievements of the Metal Goods and Agricultural Equipment Factory in Osowiec, near Opole. Przegl techn no.25:9. Je '62.

APPROVED FOR RELEASE: 08/25/2000 CIA-RDP86-00513R001446120018-4"

"APPROVED FOR RELEASE: 08/25/2000 CIA-RDP86-00513R001446120018-4

P/005/62/000/025/003/007

AUTHOR: Rusnok, Boguslaw, Master of Engineering

TITLE: Achievements of the Fabryka Wyrobów Metalowych i Narzedzi Gospodarczych (Metalworks and Agricultural Machinery Plant) at Osowiec near Opole

PERIODICAL: Przeglad techniczny, no. 25, 1962, 9

TEXT: The introduction of approved technical standards and norms required extensive preparatory work during the 1960-1961 period. This involved important revisions of available technical documentation and complete reorganization of work methods. The new arrangement offered significant technical advantages and resulted in substantial savings. The 1961 plan was fulfilled 106.2 percent; and the plan for the first quarter of 1962, 140 percent. The replacement of 300 tons of imported raw materials with domestic materials is considered one of the most important achievements of the enterprise. Modernization of the heating system in the metalworking section is anticipated in the near future. This improvement is expected to affect the development of the plant, in particular with respect to exports. No references or illustrations.

Card 1 of 1

APPROVED FOR RELEASE: 08/25/2000 CIA-RDP86-00513R001446120018-4"

"APPROVED FOR RELEASE: 08/25/2000 CIA-RDP86-00513R001446120018-4

RUSNNOV, A. I.

Rusnnov, A. I. -- "The effect of Ca and Zn ionophoresis on the reactiveness of the organism. (Changes in resistance of guinea pigs to strychnin poisoning)," Sbornik trudov (Tomskiy obl. nauch.-issled. in-t fiz. metodov lecheniya i kurortologii), Vol VI, 1949, p. 89-97, - Bibliogs 9 items

SO: u-5241, 17 December 1953, (Letopis 'zhurnal 'nykh Statey, No. 26, 1949).

APPROVED FOR RELEASE: 08/25/2000 CIA-RDP86-00513R001446120018-4"

"APPROVED FOR RELEASE: 08/25/2000 CIA-RDP86-00513R001446120018-4

NIKITINA, Lidiya Mikhaylovna; LYKOV, A.V., akademik, red.; RUSNOV, A.A., red.

[Tables of equilibrium specific moisture content and the binding energy between moisture and materials] Tablitsy ravnovesnogo udel'nogo blagosoderzhaniia i energii sviazi vlagi s materialami. Moskva, Gosenergoizdat, 1963. 175 p. (MIRA 18:8)

1. AN Belorusskoy SSR (for Lykov).

APPROVED FOR RELEASE: 08/25/2000 CIA-RDP86-00513R001446120018-4"

"APPROVED FOR RELEASE: 08/25/2000 CIA-RDP86-00513R001446120018-4

RUSNYAK, Ishtvan [Rusznyak, Istvan]

Medical science in Hungary. Vest.AMN SSSR 17 no.7:83-87 '62.
(MIRA 15:10)

1. Prezident Vengerskoy akademii nauk.
(HUNGARY--MEDICINE)

APPROVED FOR RELEASE: 08/25/2000 CIA-RDP86-00513R001446120018-4"

"APPROVED FOR RELEASE: 08/25/2000 CIA-RDP86-00513R001446120018-4

PAPP, M.; RELIKH, P.; RUSNYAK, I.; TERE, I.

Ultrastructure of the central lacteal sinus of the intestinal villus. Arkh. anat., gist. i embr. 42 no.6:24-29 Je '62. (MIRA 15:6)

1. Otdel patologicheskoy fiziologii i morfologii Instituta eksperimental'noy meditsiny Vengerskoy akademii nauk (dir. - akademik Ishtvan Rusnyak) i Instituta gistologii i embriologii Budapeshtskogo meditsinskogo universiteta (dir. - akademik Imre Tere). Adres avtorov: Vengriya, Budapesht, Institut eksperimental'noy meditsiny Vengerskoy AN i Institut gistologii i embriologii Budapeshtskogo meditsinskogo universiteta. Otdel patologicheskoy fiziologii i morfologii.

(INTESTINES)
(ELECTRON MICROSCOPY)

APPROVED FOR RELEASE: 08/25/2000 CIA-RDP86-00513R001446120018-4"

"APPROVED FOR RELEASE: 08/25/2000 CIA-RDP86-00513R001446120018-4

RUSO, G., k.t.n.

Main water arteries in the Soviet Union. Khidrotekh i melior 9 no.8:255-256 '64.

APPROVED FOR RELEASE: 08/25/2000 CIA-RDP86-00513R001446120018-4"

"APPROVED FOR RELEASE: 08/25/2000 CIA-RDP86-00513R001446120018-4

POPKOVA, P.I., kand. med. nauk; RUSO, G.S.

Waldmann's cup endothelial test in influenza A_2. Trudy Kaf. proped. vnutr. bol. LPMI no.3:100-101 '64. (MIRA 19:1)

APPROVED FOR RELEASE: 08/25/2000 CIA-RDP86-00513R001446120018-4"

"APPROVED FOR RELEASE: 08/25/2000 CIA-RDP86-00513R001446120018-4

RUSO, L. V., inzh.

Welding of aluminum construction in shipbuilding. Tekhnika Bulg 10 no.1:8-11 '61.

APPROVED FOR RELEASE: 08/25/2000 CIA-RDP86-00513R001446120018-4"

"APPROVED FOR RELEASE: 08/25/2000 CIA-RDP86-00513R001446120018-4

RUSOL, I. S.

RUSOL,S.P., inzhener; RUSOL,I.S., inzhener

Frame with a lever device for loading lumber on trucks in pallets. Rats. i izobr.predl. v stroi. no.109:18-19 '55. (MLRA 8:12)
(Lumber--Transportation)

APPROVED FOR RELEASE: 08/25/2000 CIA-RDP86-00513R001446120018-4"

"APPROVED FOR RELEASE: 08/25/2000 CIA-RDP86-00513R001446120018-4

RUSOL, I.S.

RUSOL.S.P., inzhener; RUSOL,I.S., inzhener

Frame with a screw device for loading lumber on trucks in pallets. Rats. i izobr.predl. v stroi. no.109:21-23 '55. (MLRA 8:12)
(Lumber--Transportation)

APPROVED FOR RELEASE: 08/25/2000 CIA-RDP86-00513R001446120018-4"

"APPROVED FOR RELEASE: 08/25/2000 CIA-RDP86-00513R001446120018-4

RUSOL.S.P., inzhener; RUSOL,I.S., inzhener

Frame with a screw device for loading lumber on trucks in pallets. Rats. i izobr.predl. v stroi. no.109:21-23 '55. (MLRA 8:12)
(Lumber--Transportation)

APPROVED FOR RELEASE: 08/25/2000 CIA-RDP86-00513R001446120018-4"

"APPROVED FOR RELEASE: 08/25/2000 CIA-RDP86-00513R001446120018-4

RUSOL,S.P., inzhener; RUSOL,I.S., inzhener

Frame with a lever device for loading lumber on trucks in pallets. Rats. i izobr.predl. v stroi. no.109:18-19 '55. (MLRA 8:12)
(Lumber--Transportation)

APPROVED FOR RELEASE: 08/25/2000 CIA-RDP86-00513R001446120018-4"

"APPROVED FOR RELEASE: 08/25/2000 CIA-RDP86-00513R001446120018-4

CHEREMUKHIN, L.F.; PALAGIN, Ye.M.; RUSONIK, M.Ye.

Use of gangleron in preoperative care of patients with Basedow's disease. Sov. med. 28 no.4:43-45 Ap '64. (MIRA 17:12)

1. Fakul'tetskaya khirurgicheskaya klinika (zav. - prof. V.I. Kukosh) Gor'kovskogo meditsinskogo instituta im. S.M. Kirova i klinicheskaya khirurgicheskaya bol'nitsa No.7 (glavnyy vrach O.N. Serebryakov), Gor'kiy.

APPROVED FOR RELEASE: 08/25/2000 CIA-RDP86-00513R001446120018-4"

"APPROVED FOR RELEASE: 08/25/2000 CIA-RDP86-00513R001446120018-4

CHEREMUKHIN, L. F.; PALAGIN, Ye. M.; RUSONIK, M. Ye.

Intratracheal anesthesia in gastric surgery. Khirurgiia no.4: 63-67 '62. (MIRA 15:6)

1. Iz kafedry fakul'tetskoy khirurgii (zav. - dotsent V. I. Kukosh) Gor'kovskogo meditsinskogo instituta imeni S. M. Kirova.

(INTRATRACHEAL ANESTHESIA) (STOMACH--SURGERY)

APPROVED FOR RELEASE: 08/25/2000 CIA-RDP86-00513R001446120018-4"

"APPROVED FOR RELEASE: 08/25/2000 CIA-RDP86-00513R001446120018-4

RUSONOV, V.D., LOBANOV, Yu.N., LOGUNOV, V.N., OVCHINNIKOV, E.P., PETUKHOV, V.A., RABINOVICH, M.S.

"Experimental Investigations of Physical Processes Facilitating the Capture of Electrons Injected into the Betatron," papers presented at CERN Symposium, 1956, appearing in Nuclear Instruments, No. 1, pp. 21-30, 1957

APPROVED FOR RELEASE: 08/25/2000 CIA-RDP86-00513R001446120018-4"

"APPROVED FOR RELEASE: 08/25/2000 CIA-RDP86-00513R001446120018-4

S/123/60/000/02/03/015

Translation from: Referativnyy zhurnal. Mashinostroyeniye, 1960, No. 2, p. 79, # 5600

AUTHOR: Rusov, A. A.

TITLE: Using Mineral-Ceramic Cutting Tools in Plants of the Shipbuilding Industry

PERIODICAL: V sb.: Rezaniye mineralokeram. instrumentami. Moscow, Oborongiz, 1958, pp. 49-59

TEXT: The author describes the operation practice of plants of the shipbuilding industry, using tools fitted with mineral-ceramic bits for metal cutting operations. Tools with mineral-ceramic bits can be efficiently used for roughing, semi-finishing and finishing machining of rolled, forged and pressed machine parts of steel and cast iron at increased cutting speeds (by 1.5 - 2 times higher than the cutting speed of hard-alloy tools). Mineral-ceramic end mills operate more efficiently than hard-alloy cutters in the roughing and finishing machining of cast iron. The fundamental prerequisites for an introduction of mineral-ceramics in the factories are a properly organized centralized grinding, the

Card 1/2

APPROVED FOR RELEASE: 08/25/2000 CIA-RDP86-00513R001446120018-4"

"APPROVED FOR RELEASE: 08/25/2000 CIA-RDP86-00513R001446120018-4

S/123/60/000/02/03/015

Using Mineral-Ceramic Cutting Tools in Plants of the Shipbuilding Industry

training of grinders and quality checks of the ground tools. There are 16 figures.

O.A.B.

Card 2/2

APPROVED FOR RELEASE: 08/25/2000 CIA-RDP86-00513R001446120018-4"

"APPROVED FOR RELEASE: 08/25/2000 CIA-RDP86-00513R001446120018-4

YUGOSLAVIA

GLIGORIJEVIC, J., C. RUSOV, and D. DJUKIC, Institute for the Application of Nuclear Energy in Agriculture, Veterinary Medicine, and Forestry (Institut za Primenu Nuklearne Energije u Poljoprivredi, Veterinarstvu i Sumarstvu), Belgrade.

"The Therapeutic Effect of Radioactive Phosphorus on Certain Forms of Leucosis in Poultry."

Belgrade, Veterinarski Glasnik, Vol 17, No 6, 1963, pp 483-489.

Abstract: /Authors' English summary modified/ The authors' experiment showed that a single application of radioactive P-32 with a dosage of 300 microcuries per kilogram in poultry affected by erythroleucosis and lymphomatosis causes clinical and hematological remission. Pathomorphological study showed that there had been a certain abatement of the process, accompanied by multiplication of the /1/ unspecific connective tissue. Photos, 19 references.

APPROVED FOR RELEASE: 08/25/2000 CIA-RDP86-00513R001446120018-4"

"APPROVED FOR RELEASE: 08/25/2000 CIA-RDP86-00513R001446120018-4

ACC NR: AP7005346 SOURCE CODE: UR/0181/67/009/001/0196/0199

AUTHOR: Rusov, G. I.

ORG: Institute of Physics, SO AN SSSR, Krasnoyarsk (Institut fiziki SO AN SSSR)

TITLE: Ferromagnetic and spin-wave resonance in thin films of Fe-Ni alloys

SOURCE: Fizika tverdogo tela, v. 9, no. 1, 1967, 196-199

TOPIC TAGS: ferromagnetic resonance, spin wave resonance, resonance absorption, magnetic thin film

ABSTRACT: The purpose of the investigation was to study certain parameters (saturation magnetization, g factor, exchange-interaction constant, and resonance-absorption widths) of thin films of Fe-Ni alloys with a wide range of compositions, obtained under identical technological conditions. The films were prepared by thermal sputtering in vacuum on glass substrates. The sputtering system made it possible to obtain films of ten compositions without breaking the vacuum. The film thickness ranged from 1000 to 3500 Å. The ferromagnetic resonance absorption was measured at 9.1 GHz by a procedure described elsewhere (Izv. AN SSSR ser. fiz. v. 30, 6, 1966). A table of all the measured quantities is presented. The results show that the saturation magnetization is approximately the same as for bulk materials. The g factor ranged from 2.12 to 2.18 and exhibited no dependence on the composition. The resonance-absorption curve was broader for the pure metals (Ni and Fe) than for the alloys, for both parallel and perpendicular orientation of the film relative to the external field.

Card 1/2

APPROVED FOR RELEASE: 08/25/2000 CIA-RDP86-00513R001446120018-4"

"APPROVED FOR RELEASE: 08/25/2000 CIA-RDP86-00513R001446120018-4

ACC NR: AP7005346

In the case of perpendicular orientation of the external magnetic field, a spin-wave resonance spectrum is observed. The exchange-interaction constants obtained from an analysis of these spectra agreed well with the values obtained by other methods. Orig. art. has: 2 figures, 3 formulas, and 1 table.

SUB CODE: 20/ SUBM DATE: 17Jun66/ ORIG REF: 001/ OTH REF: 004

Card 2/2

APPROVED FOR RELEASE: 08/25/2000 CIA-RDP86-00513R001446120018-4"

"APPROVED FOR RELEASE: 08/25/2000 CIA-RDP86-00513R001446120018-4

CHISTYAKOV, N.S.; RUSOV, G.I.; BAYUKOV, O.A.; RUSOVA, S.G.

Ferromagnetic resonance in multilayer film systems. Izv. AN SSSR. Ser.fiz. 30 no.1:64-67 Ja '66. (MIRA 19:1)

1. Institut fiziki Sibirskogo otdeleniya AN SSSR.

APPROVED FOR RELEASE: 08/25/2000 CIA-RDP86-00513R001446120018-4"

"APPROVED FOR RELEASE: 08/25/2000 CIA-RDP86-00513R001446120018-4

RUSKOV, M.; PETROV, P.

Effect of planted grain seed treated with disinfectants on partridges. p. 175.

NAUCHNI TRUDOVE. Vissh lesotekhnicheski institut. Sofiia, Bulgaria, Vol. 6, 1958.

Monthly list of East European Accessions (EEAI) LC, Vol. 9, No. 1, January 1960.

Uncl.

APPROVED FOR RELEASE: 08/25/2000 CIA-RDP86-00513R001446120018-4"

"APPROVED FOR RELEASE: 08/25/2000 CIA-RDP86-00513R001446120018-4

CHEREMUKHIN, L.F.; RUSONIK, M.Ye.; PALAGIN, Ye.M.

Asphyxia and its prevention in strumectomy. Kaz. Med. Zhur. no.6:13-14 '62. (MIRA 17:5)

1. Fakul'tetskaya khirurgicheskaya klinika (zav. - dotsent V.I. Kukosh) Gor'kovskogo meditsinskogo instituta imeni S.M. Kirova.

APPROVED FOR RELEASE: 08/25/2000 CIA-RDP86-00513R001446120018-4"

"APPROVED FOR RELEASE: 08/25/2000 CIA-RDP86-00513R001446120018-4

CA

Kinetics of the catalytic oxidation of acetylene on activated MnO_2. V. Rolter and M. Rusov. *J. Phys. Chem.* (U. S. S. R.) 17, 87-90(1943). The catalytic oxidation of C_2H_2 by atm. O in air mixts. contg. 0.04 to 0.57% C_2H_2 passed over an active MnO_2 surface at the rate of 30-100 l./hr. per cc. of catalyst proceeds as an internal kinetic reaction at temps. from 140 to 170°; as an internal diffusion reaction from 170 to 220° and as an external diffusion reaction above 220°. The transition from one region to another is characterized by a change in the order of the reaction and in the magnitude of the energy of activation as follows: 140-170°, the order is 0.5, E = 16 Cal.; at 170-220°, the order is 0.75, E = 8 Cal.; above 220° the order is 1.0, E = 0. These data are in good agreement with the predictions of the theory of the kinetics of reactions on porous and powderlike substances as developed by Zel'dovich (*C. A.* 33, 7182). These exptl. data may be regarded as sufficient for a verification of the Z. theory. F. H. Rathmann

ASM-SLA METALLURGICAL LITERATURE CLASSIFICATION

APPROVED FOR RELEASE: 08/25/2000 CIA-RDP86-00513R001446120018-4"

"APPROVED FOR RELEASE: 08/25/2000 CIA-RDP86-00513R001446120018-4

YUGOSLAVIA

RUSOV, C., Dr., Research Associate, Institute for the Use of Nuclear Energy in Agriculture, Veterinary Medicine, and Forestry, Belgrade-Zemun;
PAVLOVIĆ-KENTERA, Vera, Dr., Research Associate, Institute for Medical Research, Belgrade

"Studies of Erythropoiesis in Poultry"

Belgrade, Veterinarski Glasnik, Vol 20, No 9, 1966, pp 675-678

Abstract: Effects of hypoxic hypoxia, of blood loss and hemolysis anemia, and of starvation on chicken erythropoiesis has been studied. The erythropoiesis of 4-5 monts old chickens was estimated from the measurement of ^{59}Fe incorporation into the peripheral blood cells and the counting of reticulocytes. The ^{59}Fe incorporation into the peripheral red blood cells of the control birds was gradual and reached its maximum on the sixth day after radioiron injection. There was a statistically significant difference in the ^{59}Fe incorporation rate in the experimental groups. According to the results obtained, anemia and hypoxia stimulate erythropoiesis in chickens while starvation has a depressive effect. There are 5 Western references. (Manuscript received, 28 Jun 66.)

1/1

APPROVED FOR RELEASE: 08/25/2000 CIA-RDP86-00513R001446120018-4"

"APPROVED FOR RELEASE: 08/25/2000 CIA-RDP86-00513R001446120018-4

IJP(c) JD/HW

SOURCE CODE: UR/0048/66/030/006/1009/1

...Kusov, G.I.; Tushkov, B.P.; Kuz'min, Yo.V.

ORG: Institute of Physics, Siberian Section, Academy of Sciences, SSSR (Institut fiziki Sibirskogo otdeleniya Akademii nauk SSSR)

TITLE: Spin-wave resonance in thin Fe-Ni-Co alloy films [Report, All-Union Conference on the Physics of Ferro- and Antiferromagnetism held 2-7 July 1965 in Svordlovsk]

SOURCE: AN SSSR. Izvestiya. Seriya fizicheskaya, v. 30, no. 6, 1966, 1009-1010

TOPIC TAGS: spin wave, spin wave spectrum, nickel base alloy, iron containing alloy, cobalt containing alloy, magnetic thin film

ABSTRACT: The authors have investigated spin-wave resonance at 9.1 kMHz in 350 to 1800 Å thick films of 17Fe-80Ni-3Co alloy, vacuum deposited at 10^{-5} mm Hg onto glass substrates heated to 200° C. The specimens were mounted in a rectangular cavity which was excited in the H_{120} mode and had a loaded Q factor of about 1500. From resonance absorption measurements with the films in different orientations with respect to the constant magnetic field it was found that the effective magnetization was independent of the film thickness and equal to $9900/4\pi$ G. Spin-wave resonances were observed only in the thickest (~ 1800 Å) films when the external field was perpendicular to the film. The data were satisfactorily described by the theory of

003

Card 1/2

SUB CO...

APPROVED FOR RELEASE: 08/25/2000 CIA-RDP86-00513R001446120018-4"

"APPROVED FOR RELEASE: 08/25/2000 CIA-RDP86-00513R001446120018-4

RUSOV (Engineer, Estonian SSR), REKHLYAVIUS, G. Yu., (Engineer, Lithuanian SSR), and YERSHOVA, N. D. (Engineer, Latvian SSR)

"The status and prospects for the development of welding in the Baltic republics".

Report presented at the 3rd Baltic Conference on Welding, convened by the Sovnarkhozes of the Lithuanian SSR, Latvian SSR, and Estonian SSR, 8-9 Apr 1964, Vilnyus.

[Avtomaticheskaya SVARKA, No. 7, 1964 - p. 95]

APPROVED FOR RELEASE: 08/25/2000 CIA-RDP86-00513R001446120018-4"

"APPROVED FOR RELEASE: 08/25/2000 CIA-RDP86-00513R001446120018-4

RUSOV, K.D.; PISAREV, A.A.

Automatic control of the hardening of thin-walled cylinder liners. Avt. prom. 28 no.7:41-43 Jl '62. (MIRA 16:6)

1. Yaroslavskiy motornyy zavod.
(Cast iron--Hardening)
(Automatic control)

APPROVED FOR RELEASE: 08/25/2000 CIA-RDP86-00513R001446120018-4"

"APPROVED FOR RELEASE: 08/25/2000 CIA-RDP86-00513R001446120018-4

S/117/60/000/012/018/022
A004/A001

AUTHOR: Rusov, K. D.

TITLE: The Centrifugal Lining of Bimetallic Bushings and Bearing Bushes With Lead Bronze Using H-F Currents

PERIODICAL: Mashinostroitel', 1960, No. 12, p. 38

TEXT: The author reports that the Yaroslavskiy motornyy zavod (Yaroslavl Motor Plant) and the NIITVCh have mastered the centrifugal lining of bimetallic bushings with the C-30 (S-30) lead bronze. He points out that the former method of static lining of bimetallic bushings and bearings resulted only in a utilization factor of bronze of 4% for bushings of distributing and balancing shafts, and of 12% for bearing bushes of crankshafts. Moreover, he mentions the fact, that until recently, the centrifugal lining with alloys tending to strong liquation of their components, among others also the S-30 lead bronze, was not practised much owing to the lead segregating to the surface of the steel blank, because of the effects of the centrifugal force. At the Plant the bearing-bush blanks 90 mm in diameter, of the crank journals of the crankshaft and the bushing blanks, 40 mm in diameter, of the distributing and balancing shaft, were lined with the S-30 lead bronze. The

Card 1/4

APPROVED FOR RELEASE: 08/25/2000 CIA-RDP86-00513R001446120018-4"

"APPROVED FOR RELEASE: 08/25/2000 CIA-RDP86-00513R001446120018-4

S/117/60/000/012/018/022
A004/A001

The Centrifugal Lining of Bimetallic Bushings and Bearing Bushes With Lead Bronze Using H-F Currents

centrifugal lining of the 90 mm - diameter blanks was effected at a speed of 500 rpm, while that of the 40 mm-diameter blanks was carried out at 1,200 rpm. The bronze lining obtained was 3mm thick. Temperature conditions in both cases were the same. As a result of the lining and machining of the test lot it was found that the lining process of the blanks 40 mm in diameter proved to be more reliable. This is explained by the fact that in the radial cross-section of the 40 mm-diameter blank a smaller quantity of bronze participates in the lining process owing to which the probability of the lead forming large inclusions is smaller. The lead liquation at a constant blank diameter grows with an increased quantity of bronze. Also the cooling rate of the bronze-lined blank affects the liquation considerably, as the forces arise which set the lead in motion in a direction opposite to the effect of the centrifugal force, i. e. from the inner surface of the steel blank to the center. Metallographic analyses of the bronze of the bushings 40 mm in diameter revealed that the microstructure of the S-30 bronze poured by the centrifugal method is not inferior to that of the bronze bushings lined by the static method. A laminar chemical analysis proved the uniform distribution of lead over the bronze bushing produced by the centrifugal method. For the heating of the

Card 2/4

APPROVED FOR RELEASE: 08/25/2000 CIA-RDP86-00513R001446120018-4"

"APPROVED FOR RELEASE: 08/25/2000 CIA-RDP86-00513R001446120018-4

S/117/60/000/012/018/022
A004/A001

The Centrifugal Lining of Bimetallic Bushings and Bearing Bushes With Lead Bronze Using H-F Currents

blanks and the smelting of the bronze the author recommends the two-position МГЗ-108 (MGZ-108) h-f current installation which has to be somewhat modified. One position of the installation is used for the blank heating, the second for the smelting of bronze. During the heating of the blanks the induction furnace is switched off, being automatically switched on again in the intervals between the heating periods, which ensures an expedient utilization of the generator. The illustration shows the h-f current installation for the centrifugal lining of bimetallic bushings. Rings 1 of 0.5 mm sheet steel are rolled on the face ends of the blank to prevent the

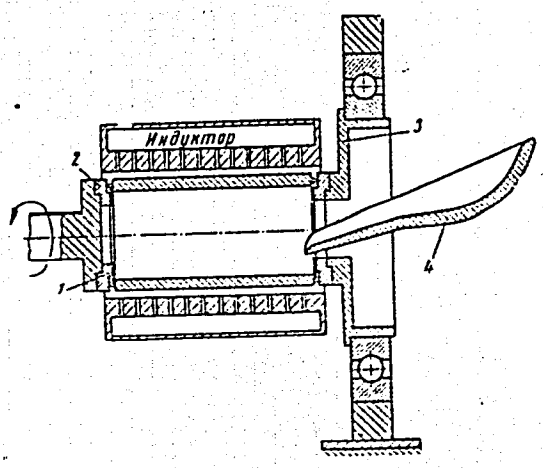

Card 3/4

APPROVED FOR RELEASE: 08/25/2000 CIA-RDP86-00513R001446120018-4"

"APPROVED FOR RELEASE: 08/25/2000 CIA-RDP86-00513R001446120018-4

S/117/60/000/012/018/022
A004/A001

The Centrifugal Lining of Bimetallic Bushings and Bearing Bushes With Lead Bronze Using H-F Currents

molten bronze from coming into contact with the centers of the machine during the pouring process. Besides, to increase the life of the centers they are protected by cast-iron rings 2. The tail stock of the machine has a hollow center 3 with a hole through which the bronze is poured into the blank by hopper 4. There is 1 figure.

Card 4/4

APPROVED FOR RELEASE: 08/25/2000 CIA-RDP86-00513R001446120018-4"

"APPROVED FOR RELEASE: 08/25/2000 CIA-RDP86-00513R001446120018-4

RUSOV, M.

RT-1029 (Kenetics of catalytic oxidation of acetylene on active manganese dioxide)
Kitetika kataliticheskogo okisleniia atsetilena na aktivnoi dvuokisi margantsa.
ZHURNAL FIZICHESKOI KHIMII, 17(2): 87-96, 1943.

APPROVED FOR RELEASE: 08/25/2000 CIA-RDP86-00513R001446120018-4"

"APPROVED FOR RELEASE: 08/25/2000 CIA-RDP86-00513R001446120018-4

PAVLEV, V.; RUSOV, M.

"Kinetics of Catalytic Oxidation of Acetylene on Active Dioxide of Manganese." Shur. Fiz. Khim., Vol. 17, No. 2, 1943

BR-52059019

APPROVED FOR RELEASE: 08/25/2000 CIA-RDP86-00513R001446120018-4"

"APPROVED FOR RELEASE: 08/25/2000 CIA-RDP86-00513R001446120018-4

RUSOV, M.

"Kinetics of Catalytic Oxidation of Acetylene on Active Dioxide of Manganese." Zhur. Fiz. Khim., Vol. 17, No. 2, 1943

ER-52059019

APPROVED FOR RELEASE: 08/25/2000 CIA-RDP86-00513R001446120018-4"

"APPROVED FOR RELEASE: 08/25/2000 CIA-RDP86-00513R001446120018-4

PROCESSES AND PROPERTIES INDEX

KINETICS OF THE CATALYTIC OXIDATION OF ACETYLENE ON ACTIVE MANGANESE DIOXIDE. V. POITER AND M. RUSOV (J. PHYS. CHEM. RUSS., 1943, 17, 87-96) --30--100 l. of air containing 0.04--5% of C_2H_2 were passed per 1 hr. through 1 g. of commercial active MnO_2. The rate v of oxidation was determined from the temp. of the air before and after passing the catalyst; this method was more exact than chemical analysis, provided that the temp. of the air before and after passing the catalyst; this method was more exact than chemical analysis, provided that the temp. of the oncoming air. At 142° $v \propto (C_2H_2)$, at 190° $v \propto (C_2H_2)^{0.7}$, and at 220° $v \propto (C_2H_2)$ o.r.; at lower temp. it is determined by the rate of reaction, and at higher temp. by the rate of diffusion. At 142° v is nearly independent of the speed of air flow and of the grain size of MnO_2, but at 220-250° it increases with this speed and the degree of dispersity (1-5 mm.) of MnO_2. The apparent heat of activation at < 170° is 14-23 kr.-cal. per g.-mol. JB

ASM-SLA METALLURGICAL LITERATURE CLASSIFICATION

APPROVED FOR RELEASE: 08/25/2000 CIA-RDP86-00513R001446120018-4"

"APPROVED FOR RELEASE: 08/25/2000 CIA-RDP86-00513R001446120018-4

RUSOL, S.P., inzh.; POLYAKOV, M.I., tekhnik

Thermomechanical continuous lime slaking unit. Suggested by S.P.Rusol, M.I.Poliakov. Rats.i izobr.predl.v stroi. no.14: 66-68 '60. (MIRA 13:6)

1. Po materialam Byuro tekhnicheskoy pomoshchi Upravleniya stroitel'stva sovnarkhoza Moldavskoy SSR, Kishinev, ul.Pushkina, 26.

(Lime industry--Equipment and supplies)

APPROVED FOR RELEASE: 08/25/2000 CIA-RDP86-00513R001446120018-4"

"APPROVED FOR RELEASE: 08/25/2000 CIA-RDP86-00513R001446120018-4

YUGOSLAVIA

GLIGORIJEVIC, J.; and RUSOV, C., Institute for the Application of Nuclear Energy in Agriculture Veterinary Medicine and Forestry (Institut za primenu nuklearne energije u poljoprivredi, veterinarstvu i sumarstvu), Belgrade - Zemun

"The Radiation Syndrome in Poultry"

Belgrade, Veterinarski Glasnik, Vol 20, No 10, 1966, p. 743-747

Abstract [English summary modified]: 74 White Rock 1 year old cocks were X-irradiated at 20 r/m with total whole-body dose of 400, 600, 1200 r. Hemotologic data between 30 minutes to 63 days post-irradiation revealed that changes, were essentially the same as in other domestic animals; except that cocks seemed slightly more radioresistant. Diagram, 2 graphs, 2 Yugoslav, 2 Soviet references, 11 Western references; manuscript received 25 Apr 66.

APPROVED FOR RELEASE: 08/25/2000 CIA-RDP86-00513R001446120018-4"

"APPROVED FOR RELEASE: 08/25/2000 CIA-RDP86-00513R001446120018-4

Belgrade, Veterinarski Glasnik, Vol 15, No 18, 1961 (cont'd)

11. "Lesions and Accidents of Staff in Artificial Insemination Centers" R. SIC; pp 1027-1031.

12. "Supplies of Drinking Milk in Bosnia and Hercegovina" S. ZELJKOVIC; pp 1033-1036.

13. "Diabetes Insipidus in a Bitch" B. RADISKO, Clinical Center of the Veterinary Department of FAGVB (Abbr. not identified) Ljubljana; pp 1037-1039.

14. "Bovine Psoroptosis" K. PETROVIC and N. DEVIR, Vet. Institute People's Rebuplic of Serbia, Belgrade; pp 1041-1042.

15. "Localization of Pathologic Changes in Amidostomosis" V. VISACKI; Veterinary Station Mramorsk; pp 1043-1044.

16. "Veterinary Station Prolog in the Cakovod Kotor - An Initiator and Participant in the Current Animal Breeding Program" I. MIJATOVIC; pp 1045-1048.

1-Institut za primenu nuklearne energije u poljoprivredi, veterinarstvu i sumarstvu. 2-Veterinarski zavod. 3-Institut i Klinika za narasne Veterinarskog fakultata. 4-Veterinarska dijagnostika stanica. 5-Institut za invazione bolesti. 6-Veterinarski centar. 7-Veterinarski institut NRS. 8-Veterinarska stanica.

— 2/2 —

APPROVED FOR RELEASE: 08/25/2000 CIA-RDP86-00513R001446120018-4"

"APPROVED FOR RELEASE: 08/25/2000 CIA-RDP86-00513R001446120018-4

L 17410-66 EWT(m)/EWA(d)/EWP(e)/EWP(t) IJP(c) JD/EW/JG

ACC NR: AP6004469 SOURCE CODE: UR/0048/66/030/001/0064/0067

82
75
B

AUTHOR: Chistyakov, N.S.; Rusov, G.I.; Bayukov, O.A.; Rusova, S.G.

ORG: Physics Institute of the Siberian Section of the SSSR Academy of Sciences (Institut fiziki Sibirskogo otdeleniya, Akademii nauk SSSR)

TITLE: Ferromagnetic resonance in multilayer film systems (Transactions of the Second All-Union Symposium on the Physics of Thin Ferromagnetic Films held at Irkutsk 10 July to 15 July 1964)

SOURCE: AN SSSR. Izvestiya, Seriya fizicheskaya, v. 30, no. 1, 1966, 64-67

TOPIC TAGS: ferromagnetic film, magnetic thin film, iron nickel alloy, cobalt, molybdenum, quartz, laminated material, ferromagnetic resonance, superhigh frequency

ABSTRACT: The authors have investigated the ferromagnetic resonance at 9 kMHz of thin ferromagnetic films and multilayer film systems consisting of alternate layers of ferromagnetic alloy and quartz. The films were vacuum evaporated at 10^{-5} mm Hg in a 100 Oe magnetic field at the rate of 60 Å/sec onto glass substrates heated to 200C. The ferromagnetic resonance absorption was measured in a rectangular cavity resonator excited in the TE_{104} mode and having a Q factor of approximately 1000. The 7-mm-diameter circular films, fastened to the end of a brass rod, were introduced into the resonator through a 7 mm diameter hole in the end wall. The resonator was tuned with a teflon rod inserted through a hole in the side wall. The magnetic field was modulated at

Card 1/3

APPROVED FOR RELEASE: 08/25/2000 CIA-RDP86-00513R001446120018-4"

"APPROVED FOR RELEASE: 08/25/2000 CIA-RDP86-00513R001446120018-4

L 17410-66

ACC NR: AP6004469

435 Hz with a special winding and was given a saw-tooth form by varying the current in the main winding. The resonance curves were displayed on an oscilloscope or recorded with a recording millivoltmeter. Single-layer films of composition 18Fe-79Ni-3Mo and 17Fe-80Ni-3Co and thickness from 400 to 2000 Å were investigated. For the Mo-containing films the resonant magnetic field decreased with increasing thickness from 1214 Oe for a 400 Å film to 818 Oe for a 2000 Å film and the width of the resonance ranged between 33 and 47 Oe. This small width of the resonance absorption line is favorable for practical applications. Data are reported on only three Co-containing films. Of these, the thickest (2000 Å) showed two absorption peaks separated by 60-80 Oe. No explanation for this is offered. A 600 Å film had a 34 Oe wide absorption line at 886 Oe and a film of unspecified thickness between 1000 and 2000 Å had a 38-Oe-wide absorption line at 861 Oe. Multilayer film systems having up to 10 layers were investigated. In these systems the metal films were approximately 1000 Å thick and the intervening quartz films were from 1500 to 2000 Å thick. As the number of layers was increased the absorption line became deeper and wider and began to evince complex structure. A ten-layer system clearly showed four resonance peaks separated by 60-80 Oe. This behavior is ascribed partly to dipole-dipole interaction between neighboring layers, as suggested by D.Chen and A.H.Morrish (J. Appl. Phys., Suppl., 33 N 3 (1962)), and partly to the influence of the conditions of deposition. It was found that if the vacuum was broken between deposition of metal and deposition of quartz the structure of the absorption curve of the resulting multilayer system was considerably different from that of a system which was deposited without breaking the vacuum. Auxiliary experiments with single-layer 20Fe-80Ni and 30Fe-45Ni-25Co films with and without quartz coverings

Card 2/3

APPROVED FOR RELEASE: 08/25/2000 CIA-RDP86-00513R001446120018-4"

"APPROVED FOR RELEASE: 08/25/2000 CIA-RDP86-00513R001446120018-4

L 17410-66
ACC NR: AP6004469

showed that the presence of the quartz considerably reduced the strength of the resonant field and increased the width of the resonance. The resonance lines of two-layer systems with quartz between the layers occurred at approximately the same field strength and were of approximately the same width as those of the corresponding single films with quartz coverings.

SUB CODE: 20/ SUBM DATE: none/ ORIG. REF: 003/
ATD PRESS: 4260

OTH REF: 003

jt

Card 3/3

APPROVED FOR RELEASE: 08/25/2000 CIA-RDP86-00513R001446120018-4"

"APPROVED FOR RELEASE: 08/25/2000 CIA-RDP86-00513R001446120018-4

RUSOV, K.

Using high-frequency currents in centrifugal casting of bimetallic bushings and liners with copper-lead alloys. Mashinostroitel' no.12:38 D '60. (MIRA 13:12)

(Centrifugal casting)

APPROVED FOR RELEASE: 08/25/2000 CIA-RDP86-00513R001446120018-4"

"APPROVED FOR RELEASE: 08/25/2000 CIA-RDP86-00513R001446120018-4

KOZUB G.M.; RUSOV, M.T.; VLASENKO, V.M.

Electronic state of catalysts in adsorption and catalysis. Part 3: Mechanism of hydrogenation of carbon dioxide on a nickel catalyst. Kinet kat. 6 no.3:556-558 My-Je '65. (MIRA 18:10)

1. Institut fizicheskoy khimii imeni Pisarzhevskogo AN UkrSSR.

APPROVED FOR RELEASE: 08/25/2000 CIA-RDP86-00513R001446120018-4"

"APPROVED FOR RELEASE: 08/25/2000 CIA-RDP86-00513R001446120018-4

VLASENKO, V.M.; YUZEFOVICH, G.Ye.; RUSOV, M.T.

Kinetics of carbon monoxide hydrogenation on a nickel catalyst. Kin. i kat. 6 no.4:688-694 Jl-Ag '65. (MIRA 18:9)

1. Institut fizicheskoy khimii imeni Pisarzhevskogo AN UkrSSR.

APPROVED FOR RELEASE: 08/25/2000 CIA-RDP86-00513R001446120018-4"

"APPROVED FOR RELEASE: 08/25/2000 CIA-RDP86-00513R001446120018-4

VLASENKO, V.M.; GLUKHOVA V.G.; MIKHALEVA, F.F.; ROZENFEL'D, M.G.; RUSOV, M.T.; SICHKOV, P.V.

Changes in the properties of zinc-chromium catalysts during the production of methyl alcohol. Khim. prom. 42 no.9:664-666 S '65. (MIRA 18:9)

APPROVED FOR RELEASE: 08/25/2000 CIA-RDP86-00513R001446120018-4"

"APPROVED FOR RELEASE: 08/25/2000 CIA-RDP86-00513R001446120018-4

PROCESSES AND PROPERTIES INDEX

Kinetics of the catalytic synthesis of ammonia M. T. Rusov and V. A. Rolter. *J. Phys. Chem.* U. S. S. R. 11, 390-9(1938). A schematic picture of the app. and its use is given. The catalyst No. 340 of the GIA was used. The relation between velocity of the reaction and total, partial pressures of the components and the compn. of the reaction mixt. was investigated. In all cases the total pressure was less than 1 atm. The order of the reaction was measured by the tangent of the angle formed by the line ($\ln \Delta p_i$ vs. $\ln p$) with the x-axis, i. e., $\ln \Delta p_i$ vs. $\ln p$, where Δp_i is a decrease of total pressure of the circulating gas and p is the total pressure, and was equal to 1.25 in the case of total pressure vs. velocity of the reaction, to 1.1.1 in the case of partial pressure of H_2 vs. velocity of the reaction, and to 0.5 that of N_2 vs. velocity of the reaction. The adsorption of NH_3 on the catalyst followed the equation $A = abp/(1 + bp)$, where $a = 0.2$ (v. and $b = 0.001$). The equation $U = K(p_{H_2}p_{N_2}^{0.5}/p^{0.5})$ accounting for the adsorption of NH_3 on the catalyst represents quite well the kinetics of the process for the case of variation of the total pressure of the mixt. The above equation states that the max. velocity is obtained with the N_2:H_2 ratio of 1:2, which is in good agreement with the experimentally found ratio (1:1.5). The energy of activation of the process is 9000 cal. The equation given by Benton (cf. C. A. 21, 1744) holds at a pressure above 10 atm., since at that pressure the adsorption of NH_3 reaches a satn.

A. A. Podgorny

ASM-SLA METALLURGICAL LITERATURE CLASSIFICATION

APPROVED FOR RELEASE: 08/25/2000 CIA-RDP86-00513R001446120018-4"

"APPROVED FOR RELEASE: 08/25/2000 CIA-RDP86-00513R001446120018-4

RUSOV, M. T.

USSR/Chemistry - Catalysts

Card : 1/1 Pub. 116 - 18/20

Authors : Strel'tsov, O. A. and Rusov, M. T.

Title : Kinetics of reduction of individual grains of an ammonium catalyst

Periodical : Ukr. khim. zhur. 20, Ed. 4, 438 - 446, 1954

Abstract : The kinetics of hydrogen reduction, of individual grains (of various size) of a technical ammonium catalyst, was investigated in isothermal conditions in a quasi-dynamic system at pressures ranging from 0.8 kg/cm^2, flow rate of 42 liters/hr and gradual temperature increase from ~ 300 to ~500°C. It was established that the process of catalyst grain reduction is retarded by the internal diffusion exchange of the reaction components. The effect of grain size reduction on the activity of the catalyst, is explained. Seven references: 6-USSR and 1-Ukrainian (1937-1950). Tables; graphs; drawing.

Institution : Acad. of Sc. Ukr-SSR, The L. V. Pisarzhevskiy Institute of Phys. Chemistry

Submitted : January 5, 1954

APPROVED FOR RELEASE: 08/25/2000 CIA-RDP86-00513R001446120018-4"

"APPROVED FOR RELEASE: 08/25/2000 CIA-RDP86-00513R001446120018-4

RUSOV, M.T.

USSR/Chemistry - Physical chemistry

Card 1/1 Pub. 147 - 13/27

Authors : Rusov, M. T., Pevzner, Ts. V.

Title : Kinetics of the synthesis and decomposition of ammonia over iron catalysts

Periodical : Zhur. fiz. khim. 28/9, 1628-1637, Sep 1954

Abstract : Results obtained during comparative investigation of the kinetics of ammonia decomposition over an iron porous-granule and smooth iron-foil "Armko" are presented. The results obtained by studying the kinetics of ammonia synthesis over a porous-granule of an iron catalyst, were found to be in conformity with data obtained in a quasidynamic system. The rate of reaction in a 290 - 500° temperature range was determined by the diffusion interchange in the porous-granule. The process of ammonia decomposition over an iron foil is explained. Three USSR references (1939-1950). Table; graphs; drawing.

Institution : Acad. of Sc. Ukr-SSR, The L. V. Pisarzhevskiy Institute of Phys. Chem., Kiev

Submitted : January 9, 1954

APPROVED FOR RELEASE: 08/25/2000 CIA-RDP86-00513R001446120018-4"

"APPROVED FOR RELEASE: 08/25/2000 CIA-RDP86-00513R001446120018-4

USSR/Chemistry - Catalytic decomposition

Card 1/1 Pub. 147 - 8/25

Authors : Rusov, M. T., and Pevzner, Ts. V.

Title : The kinetics of ammonia decomposition over catalysts of different nature

Periodical : Zhur. fiz. khim. 28/10, 1765-1769, Oct 1954

Abstract : The process of ammonia decomposition was investigated in conditions eliminating any diffusion distortion of the kinetics of this reaction. The investigation was conducted in strictly isothermal conditions employing catalysts of different chemical nature (iron, copper and quartz). It is shown that the kinetics of ammonia decomposition over a smooth iron foil at temperatures of 540-740° follows an outer kinetic process with an energy of decomposition activation of 54.0 kcal/mol. At temperatures above 740° the process changes into an outer-diffusion zone. The specific rate constants and the frequency factors of the decomposition reaction, over the above mentioned catalysts, are explained. Nine USSR references (1934-1954). Table; graphs; drawing.

Institution : Acad. of Sc. Ukr-SSR, The L. V. Pisarzhevskiy Institute of Phys. Chemistry, Kiev

Submitted : January 1, 1954

APPROVED FOR RELEASE: 08/25/2000 CIA-RDP86-00513R001446120018-4"

"APPROVED FOR RELEASE: 08/25/2000 CIA-RDP86-00513R001446120018-4

RUSOV, M.T.

USSR

62
(2)

The kinetics of ammonia synthesis when unaffected by diffusional inhibition. A. N. Gerasenkova, M. T. Rusov, and O. A. Strel'tsova. *Doklady Akad. Nauk S.S.S.R.* 96, 1015-16(1954).—The synthesis and decompn. of NH_3 on double-promoted porous Fe catalyst were previously proved at the U.S.S.R. Acad. of Sci. to be greatly inhibited by diffusion through the catalyst pores at temp. above 300°, and over a wide range of pressures. The present investigation of the kinetics of NH_3 synthesis was made under conditions that made the synthesis independent from external and internal diffusion processes. A thin Armco-Fe foil, 0.1 mm. thick, promoted with Al_2O_3, was used as a catalyst by oxidizing the foil at 450-70° with steam, and by applying $Al(OH)_3$ to the surface by immersion in 10% $Al(NO_3)_3$ soln., drying, and keeping it in an atm. of NH_3, then reducing with a N_2-H_2 mixt. Synthesis was studied at 400-500° and at room temp. with a stoichiometric mixt. of gases. The reaction energy was found to be 59.0 ± 1.0 kcal./mol., and is higher than usually found with porous catalysts (40.0-46.5 kcal./mol.). W. M. Sternberg

APPROVED FOR RELEASE: 08/25/2000 CIA-RDP86-00513R001446120018-4"

"APPROVED FOR RELEASE: 08/25/2000 CIA-RDP86-00513R001446120018-4

RUSOV, M. T.

USSR/Chemistry - Physical Chemistry

Card : 1/1

Authors : Gerasenkova, A. N. Rusov, M. T. and Stel'tsov, O. A.

Title : Effect of reducing conditions on the activity of a smooth surface of an iron catalyst

Periodical : Dokl. AN SSSR, 96, Ed. 6, 1179 - 1181, June 1954

Abstract : The effect of reducing conditions on the activity of a smooth surface iron catalyst was investigated on a thin smooth iron foil activated with aluminum oxide. The activity of the catalyst depends not only upon the chemical composition and the preparation of the contact but also upon the conditions of its formation. The process of reducing such catalysts is retarded by the internal diffusion exchange of reaction components which leads to a change in the activity of the catalyst and change in grain structure. Seven references. Tables, graphs.

Institution : ...

Presented by : Academician A. N. Frumkin, March 15, 1954

APPROVED FOR RELEASE: 08/25/2000 CIA-RDP86-00513R001446120018-4"

"APPROVED FOR RELEASE: 08/25/2000 CIA-RDP86-00513R001446120018-4

Risov M.I.

APPROVED FOR RELEASE: 08/25/2000 CIA-RDP86-00513R001446120018-4"

"APPROVED FOR RELEASE: 08/25/2000 CIA-RDP86-00513R001446120018-4

RUSOV, M.T., doktor khim.nauk; SIDOROV, I.P., kand.tekhn.nauk; STREL'TSOV, O.A., kand.khim.nauk; KURKCHI, G.A.; TRETYAK, V.G.; KORYAKINA, Ye.V.

Macrokinetics of the catalytic synthesis of ammonia at high pressures in a recirculation system. Trudy GIAP no.7:101-120 '57. (MIRA 12:9)

(Ammonia) (Catalysis)

APPROVED FOR RELEASE: 08/25/2000 CIA-RDP86-00513R001446120018-4"

"APPROVED FOR RELEASE: 08/25/2000 CIA-RDP86-00513R001446120018-4

SKARCHENKO, V.K.; RUSOV, M.T.; STREL'TSOV, O.A.; RADCHENKO, N.P.; SNIGUROVSKAYA, Yu.A.

Effect of the reduction conditions of industrial catalysts for ammonia synthesis on their specific activity. Report No.1: Kinetics of the catalyst reduction. Ukr. khim. zhur. 24 no.4: 443-448 '58. (MIRA 11:10)

1. Institut fizicheskoy khimii im. L.V. Pisarzhevskogo AN USSR.
(Catalysts) (Reduction, Chemical)

APPROVED FOR RELEASE: 08/25/2000 CIA-RDP86-00513R001446120018-4"

"APPROVED FOR RELEASE: 08/25/2000 CIA-RDP86-00513R001446120018-4

SKARCHENKO, V.K.; RUSOV, M.T.; STREL'TSOV, O.A.

Effect of the reduction conditions of industrial catalysts for ammonia synthesis on their relative activity. Part 2: Sorption of methyl alcohol on an iron catalyst for ammonia synthesis. Ukr. khim. zhur. 24 no.4:449-452 '58. (MIRA 11:10)

1. Institut fizicheskoy khimii im. L.V. Pisarzhevskogo AN USSR.
(Methanol) (Sorption) (Catalysts)

APPROVED FOR RELEASE: 08/25/2000 CIA-RDP86-00513R001446120018-4"

"APPROVED FOR RELEASE: 08/25/2000 CIA-RDP86-00513R001446120018-4

SKARCHENKO, V.K.; RUSOV, M.T.; STREL'TSOV, O.A.; RADCHENKO, N.P.; SNIGUROVSKAYA, Yu.A.

Effect of the reduction conditions on specific activity of industrial catalysts for ammonia synthesis. Part 3: Effect of the grain size and temperature conditions of reduction on specific activity of the catalyst. Ukr.khim.zhur. 24 no.5:602-607 '58. (MIRA 12:1)

1. Institut fizicheskoy khimii imeni L.V. Pisarzhevskogo AN USSR.
(Catalysts) (Activity coefficients) (Ammonia)

APPROVED FOR RELEASE: 08/25/2000 CIA-RDP86-00513R001446120018-4"

"APPROVED FOR RELEASE: 08/25/2000 CIA-RDP86-00513R001446120018-4

5.4300
~~5 (1), 5 (2)~~

67791
S/064/59/000/07/012/035
B005/B123

AUTHOR: Rusov, M. T.

TITLE: An Empirical Equation for the Process of Ammonia Synthesis and Its Application

PERIODICAL: Khimicheskaya promyshlennost', 1959, Nr 7, pp 594 - 596 (USSR)

ABSTRACT: The general kinetic equation for the formation process of ammonia from elements set up by Temkin and Pyzhev (Ref 1) has the following form:

$$\frac{d\,P_{NH_3}}{d\tau} = K_1 P_{N_2} \left[\frac{P^3_{H_2}}{P^2_{NH_3}}\right]^{\alpha} - K_2 \left[\frac{P^2_{NH_3}}{P^3_{H_2}}\right]^{1-\alpha} \qquad (1)$$

(K_1, K_2 ... velocity constant of the formation and decomposition respectively, of ammonia; α ... coefficient). The value of α varies depending on the coating density of the catalyst surface by the adsorbed nitrogen between 0 and 1. Equation (1) does not hold for industrial conditions (temperatures > 400°, pressures from 0.8-300 kg.cm^{-2}, technical catalysts of a grain size of >1 mm), as in these cases the synthesis is determined by the

Card 1/3

APPROVED FOR RELEASE: 08/25/2000 CIA-RDP86-00513R001446120018-4"

"APPROVED FOR RELEASE: 08/25/2000 CIA-RDP86-00513R001446120018-4

transportation of the substance in the pores of the catalyst. For the capacity Y of the catalyst (in $kg.hours.m^{-3}$) the following general equation was found (Ref 12):

$Y = K \tau^{-b} P^{n}$ (2) (τ ... contact time in sec; P ... total pressure of the gas in $kg.cm^{-2}$; K ... constant, depending on temperature and activity of the catalyst; n ... total order of the reaction; b ... exponent). In order to compute the concentration Z of ammonia by percent, equation (2) can be transformed into two equations:

$Z = K_2 T^{b} U_z^{b-1} P^{n-b}$ (4) $Z = K_3 \tau^{1-b} P^{n-1}$ (5) ($K_2 = \frac{100K}{3600^{b} \varphi^{b} T_o^{b} i}$;

$K_3 = \frac{100KT}{3600 \varphi i T_o}$; T ... temperature of catalysis in ^{o}K; U_z ... flow velocity of the gas, referred to the unit volume, in $hours^{-1}$; $\varphi = 0.5$; i ... specific weight of ammonia equals 0.77 $g.l^{-1}$). If the ammonia synthesis is carried out isothermally and the con-

APPROVED FOR RELEASE: 08/25/2000 CIA-RDP86-00513R001446120018-4"

"APPROVED FOR RELEASE: 08/25/2000 CIA-RDP86-00513R001446120018-4

centration Z_o of ammonia when entering the sphere of catalysis, equals zero, equations (2), (4) and (5) can be used for computing the yield of ammonia and the capacity of the catalyst, referred to the layer length, at various pressures, flow velocities of the gas and temperatures. For $Z_o \neq 0$ a correction must be made considering the time during which the amount Z_o of ammonia might have been formed. In 4 tables the data of which are taken from the chemical literature mentioned, computed values and values found by experiment for the capacity of the catalyst under varying conditions, are compared. Although conditions varied a great deal, equation (2) was satisfied in all cases. This equation characterizes therefore the process of ammonia synthesis in a wide range of gas flow velocities, pressures and temperatures. Equation (2) is furthermore very interesting because it holds for the catalytic ammonia synthesis made under kinetic transition conditions, up to 80-90% of equilibrium. There are 1 figure, 4 tables, and 16 Soviet references.

APPROVED FOR RELEASE: 08/25/2000 CIA-RDP86-00513R001446120018-4"

"APPROVED FOR RELEASE: 08/25/2000 CIA-RDP86-00513R001446120018-4

5.1190
~~5(4)~~

66866

AUTHORS: Strel'tsov, O.A., Rusov, M.T., Skarchenko, V.K. SOV/76-33-11-26/47

TITLE: Influence of the Conditions of Formation on the Specific Activity of an Ammonia Catalyst

PERIODICAL: Zhurnal fizicheskoy khimii, 1959, Vol 33, Nr 11, pp 2521-2523 (USSR)

ABSTRACT: The influence of the conditions at the reduction of catalysts, (for the ammonia synthesis) of a certain chemical composition, on the size of the catalyst surface and the catalytic activity has been investigated. A twice "promoted" (4% Al_2O_3, 2% K_2O) commercial iron catalyst of type A was applied, the granulation of the catalyst and the reduction temperature were changed (Table 1). The catalytic activity was determined by the reaction rate of the ammonia synthesis according to the circulation method at 730 mm Hg, a volume rate of 6300 l/hour·1 catalyst, and at 200-500°C, while the rate constant was calculated according to the equation of M.I. Temkin and V.M. Pyzhev (Ref 1). The surface of the samples was calculated according to the BET method from the sorption isothermal lines for methanol at 20°C. Variations of the reduc-

Card 1/2

APPROVED FOR RELEASE: 08/25/2000 CIA-RDP86-00513R001446120018-4"

"APPROVED FOR RELEASE: 08/25/2000 CIA-RDP86-00513R001446120018-4

tion conditions have little influence on the size of the total surface of the catalyst. An increase in the granulation of the catalyst (Table 2) from 0.4 to 5.5 mm decreases the specific activity (at 225°C) 7 to 9-times. An increase in the temperature of the catalyst reduction also causes a decrease in the specific activity (at 225°) 3 to 4-times. With an increase in the granulation of the catalyst, the concentration of the water in the catalyst pores increases and thus the travel of the water molecule from the center of the catalyst segment to its surface is longer, which, naturally, causes a decrease in the catalyst activity. The difference of the specific activity of the catalyst (of a certain chemical composition) in dependence on the reduction conditions can only be explained by the heterogeneity of the active surface. There are 2 tables and 5 Soviet references.

ASSOCIATION: Akademiya nauk USSR, Institut fizicheskoy khimii im. L. V. Pisarzhevskogo, Kiyev (Academy of Sciences of the UkrSSR, Institute of Physical Chemistry imeni L. V. Pisarzhevskiy, Kiyev)

APPROVED FOR RELEASE: 08/25/2000 CIA-RDP86-00513R001446120018-4"

"APPROVED FOR RELEASE: 08/25/2000 CIA-RDP86-00513R001446120018-4

STREL'TSOV, O.A.; RUSOV, M.T.; KUKHAR', L.A.; LOZA, A.N.

Dependence of the activity of the ammonia catalyst GK-1 on the rate of gas flow in the course of the reduction. Kin. i kat. 1 no. 4:597-603 N-D '60. (MIRA 13:12)

1. Institut fizicheskoy khimii imeni L.V. Pisarzhevskogo AN USSR.
(Reduction) (Catalysts)

APPROVED FOR RELEASE: 08/25/2000 CIA-RDP86-00513R001446120018-4"

"APPROVED FOR RELEASE: 08/25/2000 CIA-RDP86-00513R001446120018-4

VLASENKO, V.M.; KRUGLOV, B.I.; ROZENFEL'D, M.G.; RUSOV, M.T.

Preparation and regeneration of zinc-chromium catalysts in the synthesis of alcohols. Khim.prom. no.1:1-6 Ja '61. (MIRA 14:1)
(Alcohols) (Catalysts)

APPROVED FOR RELEASE: 08/25/2000 CIA-RDP86-00513R001446120018-4"

"APPROVED FOR RELEASE: 08/25/2000 CIA-RDP86-00513R001446120018-4

KOZUB, G.M.; RUSOV, M.T.; VLASENKO, V.M.

Electronic state of catalysts during adsorption and catalysis. Part 1: Temperature dependence of the electric conductivity and type of conductivity of catalysist in the synthesis of isobutyl alcohol. Kin. i kat. 2:240-244 Mr-Ap '61. (MIRA 14:6)

1. Institut fizicheskoy khimii imeni L. V. Pisarzhevskogo AN USSR, Kiyev.
(Catalysts--Electric properties)
(Isobutyl alcohol)

APPROVED FOR RELEASE: 08/25/2000 CIA-RDP86-00513R001446120018-4"

"APPROVED FOR RELEASE: 08/25/2000 CIA-RDP86-00513R001446120018-4

RUSOV, M.T.; KOZUB, G.M. [Kozub, H.M.]; VLASENKO, V.M.

Studying the mechanism of catalytic synthesis of methyl alcohol by the change of the work function. Dop.AN URSR no.7:935-937 '61. (MIRA 14:8)

1. Institut fizicheskoy khimii AN USSR. Predstavleno akademikom AN USSR A.I.Brodskim [Brods'kyi, O.I.].
(Methanol) (Catalysis)

APPROVED FOR RELEASE: 08/25/2000 CIA-RDP86-00513R001446120018-4"

"APPROVED FOR RELEASE: 08/25/2000 CIA-RDP86-00513R001446120018-4

VLASENKO, V.M.; RUSOV, M.T.; YUZEFOVICH, G.Ye.; Prinimali uchastiye: ZHULINSKAYA, V.A.; SIKORSKAYA, E.K.

Kinetics of carbon dioxide hydrogenation on a nickel catalyst. Kin.i kat. 2 no.4:525-528 Jl-Ag '61. (MIRA 14:10)

1. Institut fizicheskiy khimii imeni L.V.Pisarzhevskogo AN USSR, Kiyev.
(Carbon dioxide) (Hydrogenation) (Nickel, Catalyst)

APPROVED FOR RELEASE: 08/25/2000 CIA-RDP86-00513R001446120018-4"

"APPROVED FOR RELEASE: 08/25/2000 CIA-RDP86-00513R001446120018-4

[illegible] TR[illegible]

[illegible] of the active surface of a commercial iron ammonia catalyst by means of various reducing agents. Ukr.khim.zhur. [illegible] 14:11)

1. Institut fizicheskoy khimii im. L.V. Pisarzhevskogo AN UESR.
(Catalysts)

APPROVED FOR RELEASE: 08/25/2000 CIA-RDP86-00513R001446120018-4"

"APPROVED FOR RELEASE: 08/25/2000 CIA-RDP86-00513R001446120018-4

VLASENKO, V.M.; KRUGLOV, B.I.; ROZENFEL'D, M.G.; RUSOV, M.T.; SICHKOV, P.V.

Change of properties of zinc-chromium catalysts in the course of isobutyl alcohol production. Khim.prom. no.4:244-248 Ap '62. (MIRA 15:5)

(Isobutyl alcohol) (Catalysts)

APPROVED FOR RELEASE: 08/25/2000 CIA-RDP86-00513R001446120018-4"

"APPROVED FOR RELEASE: 08/25/2000 CIA-RDP86-00513R001446120018-4

VLASENKO, V.M.; KUKHAR', L.A.; ROZENFEL'D, M.G.; RUSOV, M.T.

State of the promoting potassium salt added to a zinc-chromium catalyst of isobutyl alcohol synthesis. Khim.prom. no.9:555-558 Ag '62. (MIRA 15:9)
(Isobutyl alcohol)
(Catalysts)

APPROVED FOR RELEASE: 08/25/2000 CIA-RDP86-00513R001446120018-4"

"APPROVED FOR RELEASE: 08/25/2000 CIA-RDP86-00513R001446120018-4

STREL'TSOV, O.A.; SAMARIN, B.P.; SIDOROV, I.P.; RUSOV, M.T.

Catalysts and catalytic processes occurring in long layers.
Kin.i kat. 3 no.4:580-582 Jl-Ag '62. (MIRA 15:8)

1. Gosudarstvennyy institut azotnoy promyshlennosti i Institut fizicheskoy khimii imeni L.V.Pisarzhevskogo AN USSR.
(Catalysis) (Chemical reactors)

APPROVED FOR RELEASE: 08/25/2000 CIA-RDP86-00513R001446120018-4"

"APPROVED FOR RELEASE: 08/25/2000 CIA-RDP86-00513R001446120018-4

ARTYUKH, Yu.N.; RUSOV, M.T.; STREL'TSOV, O.A.

Kinetics of reduction of ammonia catalysts of various chemical compostion. Ukr.khim.zhur. 28 no.7:825-828 '62. (MIRA 15:10)

1. Institut fizicheskoy khimii im.L.V.Pisarzhevskogo AN UkrSSR.
(Ammonia) (Catalysts) (Reduction, Chemical)

APPROVED FOR RELEASE: 08/25/2000 CIA-RDP86-00513R001446120018-4"

"APPROVED FOR RELEASE: 08/25/2000 CIA-RDP86-00513R001446120018-4

ARTYUKH, Yu.N.; RUSOV, M.T.; STREL'TSOV, O.A.

Heats of activation of the reaction of ammonia decomposition on catalysts of various chemical nature. Part 1: Iron-based catalysts. Kin.i kat. 4 no.1:134-138 Ja-F '63. (MIRA 16:3)

1. Institut fizicheskoy khimii imeni L.V.Pisarzhevskogo AN UkrSSR.
(Heat of decomposition) (Ammonia) (Iron catalysts)

APPROVED FOR RELEASE: 08/25/2000 CIA-RDP86-00513R001446120018-4"

"APPROVED FOR RELEASE: 08/25/2000 CIA-RDP86-00513R001446120018-4

ARTYUKH, Yu.N.; RUSOV, M.T.; STREL'TSOV, O.A.

Heats of activation of ammonia decomposition reaction on catalysts of different chemical nature. Part 2: Cobalt, nickel, copper, and zirconium based catalysts. Kin.i kat. 4 no.2:299-302 Mr-Ap '63. (MIRA 16:5)

1. Institut fizicheskoy khimii imeni L.V.Pisarzhevskogo AN UkrSSR.
(Catalysts) (Ammonia) (Heat of decomposition)

APPROVED FOR RELEASE: 08/25/2000 CIA-RDP86-00513R001446120018-4"

"APPROVED FOR RELEASE: 08/25/2000 CIA-RDP86-00513R001446120018-4

GELLER, B.A.; NEYMARK, I.Ye.; RUBANIK, M.Ya.; GRAGEROV, I.P.; POLYAKOV, M.V.; RUSOV, M.T.; DAIN, B.Ya.; REKASHEVA, A.F.; STRAZHESKO, D.N.; LUNENOK, V.A.; ROYTER, V.A.; SULIMA, L.V.; FOMENKO, A.S.

Aleksandr Il'ich Brodskii, 1895- ; on his seventieth birthday. Zhur. fiz. khim. 39 no.6:1540-1541 Je '65.

(MIRA 18:11)

APPROVED FOR RELEASE: 08/25/2000 CIA-RDP86-00513R001446120018-4"

"APPROVED FOR RELEASE: 08/25/2000 CIA-RDP86-00513R001446120018-4

VLASENKO, V.M.; YUZEFOVICH, G.Ye.; RUSOV, M.T.

Hydrogenation of carbon monoxide and dioxide over a nickel catalyst. Kin.i kat. 6 no.5:938-941 S-O '65.

(MIRA 18:11)

1. Institut fizicheskoy khimii imeni Pisarzhevskogo AN UkrSSR.

APPROVED FOR RELEASE: 08/25/2000 CIA-RDP86-00513R001446120018-4"

"APPROVED FOR RELEASE: 08/25/2000 CIA-RDP86-00513R001446120018-4

KOZUB, G.M.; RUSOV, M.T.; VLASENKO, V.M.

Electronic states of catalysts in adsorption and catalysis. Part 2: Mechanism of carbon monoxide hydrogenation over a nickel catalyst. Kin. i kat. 6 no.2:244-249 Mr-Ap '65. (MIRA 18:7)

1. Institut fizicheskoy khimii imeni Pisarzhevskogo AN UkrSSR.

APPROVED FOR RELEASE: 08/25/2000 CIA-RDP86-00513R001446120018-4"

"APPROVED FOR RELEASE: 08/25/2000 CIA-RDP86-00513R001446120018-4

L 64294-65 EWT(m)/EPF(c)/EWP(j)/EWP(t)/EWP(z)/EWP(b) IJP(c) JD/JW/HW/RM

ACCESSION NR: AP5020985 UR/0195/65/006/004/0688/0694

541.127:542.941.7:546.962.3-31:546.74-44

AUTHOR: Vlasenko, V. M.; Yuzefovich, G. Ye.; Rusov, M. T.

TITLE: Kinetics of the hydrogenation of carbon monoxide on a nickel catalyst

SOURCE: Kinetika i kataliz, v. 6, no. 4, 1965, 688-694

TOPIC TAGS: hydrogenation, kinetic equation, carbon monoxide, nickel alloy, catalysis, activation energy, physical diffusion

ABSTRACT: Tests were carried out by the continuous circulation method at atmospheric pressure and at different carbon monoxide contents in hydrogen which had been previously purified of oxygen by catalysis at a temperature of 250-300C. The catalyst was either charged into the reactor in a solid bed or placed in baskets. Special experiments at a temperature of 160C established that the rate of the process does not depend on the manner of charging the catalyst. All catalyst samples were previously reduced with hydrogen at 300C. Experimental results are given in tabular form. The reaction rate in the kinetic region was found to be described by an equation of zero order, with an activation energy of 16.2 kcal/mole

Card 1/2

APPROVED FOR RELEASE: 08/25/2000 CIA-RDP86-00513R001446120018-4"