"APPROVED FOR RELEASE: 06/20/2000 CIA-RDP86-00513R001446210016-6

RUVINSKIY, V.A.; TENGIBAROVA, R.N.

Safe electric tests in explosion-hazardous sections of refineries; a discussion. Energ. biul. no.4:1-8 Ap '58. (MIRA 11:5)
(Electric testing)

APPROVED FOR RELEASE: 06/20/2000 CIA-RDP86-00513R001446210016-6"

"APPROVED FOR RELEASE: 06/20/2000 CIA-RDP86-00513R001446210016-6

Ruvinskiy, V.A.

SOV/112-58-1-43

Translation from: Referativnyy zhurnal, Elektrotekhnika, 1958, Nr 1, p 4 (USSR)

AUTHOR: Ruvinskiy, V. A., and Vol'pe, S. M.

TITLE: Electric Safety Measures in Construction and Installation Work on Marine Foundations and Trestles (Mery elektrobezopasnosti pri stroitel'nomontazhnykh rabotakh na morskikh osnovaniyakh i estakadakh)

PERIODICAL: Tr. Vses. n.-i. in-ta po tekhn. bezopasnosti, 1956, Nr 9, pp 91-102

ABSTRACT: Bibliographic entry.

AVAILABLE: Library of Congress

1. Marine engineering 2. Electricity--Safety measures

Card 1/1

APPROVED FOR RELEASE: 06/20/2000 CIA-RDP86-00513R001446210016-6"

"APPROVED FOR RELEASE: 06/20/2000 CIA-RDP86-00513R001446210016-6

SOV-90-58-10-1/9

AUTHORS: Pavlov, P.P., Kulikov, B.A., Ruvimskiy, V.A., Vol'pe, C.M.

TITLE: The Determination of the Permissible Current Load of a Single Strand of KTO-4 Logging Cable (Opredeleniye dopustimoy tokovoy nagruzki odinarnoy zhily karotazhnogo kabelya KTO-4)

PERIODICAL: Energeticheskiy byulleten', 1958, Nr 10, pp 1 - 3 (USSR)

ABSTRACT: The authors state that at the present time, old KTO-4 cable, unsuitable for logging, is being used in the oil industry for the illumination of borings. The Baku laboratory of TsNIIPO and the All-Union Scientific Research Institute for Safety Measures in the Oil Industry (VNIITB) have carried out an experiment to find the permissible current load of a single strand of KTO-4 logging cable, under a surrounding temperature of 35° C, and the maximum permissible temperature for the heat-resistant rubber insulation of the strand, according to the catalogue 65° C. The experiment was carried out on a section of an insulated strand 1.5 meters long, placed in a thermostat where the temperature was 35°. The current was fed to the strand from the lower side of a 220/12 volt transformer with a capacity of 300 watts, which was supplied from a 220 volt network. With the temperature

Card 1/2

APPROVED FOR RELEASE: 06/20/2000 CIA-RDP86-00513R001446210016-6"

"APPROVED FOR RELEASE: 06/20/2000 CIA-RDP86-00513R001446210016-6

in the thermostat at 35°, the current flowing through the cable was found to be 25.5 amps when the temperature in the steel strand of the cable was 65°. Separate insulated strands of KTO-4 logging cable can therefore be used for lighting purposes providing the current load does not exceed 25 amps and the voltage is not over 220 v. The authors then give a formula for calculating the maximum length of strand which can be used. Besides the conclusions given above, the authors finally give the following: 1) the safety devices on the line should not be set higher than 25 amps; 2) KTO-4 cable cannot be used for feeding lighting or power loads either as a complete cable or in separate strands; 3) when the strands are used in external wiring they should be fastened to porcelain insulators; 4) the strands can only be used in lighting systems if the colored layer of rubberized linen is left on the rubber insulation. There is one diagram.

1. Electric cables--Electrical properties 2. Electric cables --Insulation

APPROVED FOR RELEASE: 06/20/2000 CIA-RDP86-00513R001446210016-6"

"APPROVED FOR RELEASE: 06/20/2000 CIA-RDP86-00513R001446210016-6

ZHURAVLEVA, G.V., inzh.; RUVINSKIY, V.A., inzh.

Lighting of drilling stations. Bezop.truda v prom. 4 no.1:17-19 Ja '60. (MIRA 13:5)

1. Vsesoyuznyy nauchno-issledovatel'skiy institut po tekhnike bezopasnosti v neftyanoy promyshlennosti.
(Oil well drilling) (Lighting)

APPROVED FOR RELEASE: 06/20/2000 CIA-RDP86-00513R001446210016-6"

"APPROVED FOR RELEASE: 06/20/2000 CIA-RDP86-00513R001446210016-6

RUVINSKIY, V.A.

AUTHORS: Ruvinskiy, V.A.; Yengibarova, R.N. 90-58-4-1/6

TITLE: Safe Method for Electrical Tests on Oil Refinery Premises Filled with Explosive Fumes (Bezopasnoye provedeniye elektricheskikh ispytaniy vo vzryvoopasnykh pomeshcheniyakh neftepererabatyvayushchikh zavodov)

PERIODICAL: Energeticheskiy Byulleten', 1958, Nr 4, pp 1-8 (USSR)

ABSTRACT: During the testing of electrical equipment in rooms subject to the danger of explosion the usual test methods cannot be applied, because spark and arc formation must be avoided. The All-Union Scientific Research Institute of Accident Prevention in the Oil Industry has developed special methods and equipment for electrical tests under these conditions. The testing of electrical equipment by means of a megohm-meter is carried out in such a way that the device to be tested is completely assembled with switches and starters, etc. in "on" position. The measuring is done outside the room. If the measured resistance is below the admissible value, every part of the installation is separately measured. The application of a kenotron to cables is especially dangerous because of the possibility of intensive spark and arc formation. The kenotron should be

Card 1/4

APPROVED FOR RELEASE: 06/20/2000 CIA-RDP86-00513R001446210016-6"

"APPROVED FOR RELEASE: 06/20/2000 CIA-RDP86-00513R001446210016-6

established at one end of the cable in a safe room. New equipment has been developed which can be used for testing 10 kv cables in dangerous rooms, applying a test voltage of 30-40 kv. A ventilator is installed at least 20 m outside the danger zone and connected by means of a tube with the junction box of the cable around which a casing is made. Within the sleeve connecting the air tube with the casing a blocking device with a disc is installed. This disc is operated by air flow and closes the contacts and the coil chain of the relay RE-218 which in turn operates the kenotron (Figure 2). A cable with a cross section of 2 x 1.5 mm^2 is laid within the air tube to the contacts in the sleeve. If the insulation of the cable is damaged, there is no danger. Connecting the leads from the ventilator to the air tube is done by means of a current lead (Figure 3). From the current lead a tube cable with a cross section of 2 x 1.5 mm^2 is laid to the control desk (Figure 4). The automatic device consists of a time relay RE-218, the insulator OA-35 of 35 kv, and the grounding rod (Figure 2). The control desk consists of a two-

APPROVED FOR RELEASE: 06/20/2000 CIA-RDP86-00513R001446210016-6"

"APPROVED FOR RELEASE: 06/20/2000 CIA-RDP86-00513R001446210016-6

pole switch for switching the device on and off, a button for switching on the kenotron type KU-1, and a panel with terminals for connecting the automatic circuit-breaking device, the current lead, the kenotron, and a 220 v wire from the main electric line (Figure 4). The ventilator supplying the air should have a capacity of 50 m^3/h at a pressure of 40 kg/m^2. The usual type of vacuum cleaner may also be used. The checking of the grounding and the neutralization of electric installations consists usually in the measuring of the resistance of the grounding and of the leads of the grounding or neutralization. The measuring is done by a grounding-measuring device or a double bridge. This method of measuring has the drawback that the resistance caused by the connection of the cramp and the measured object is measured as originating from the object. It is also shown that currents of 25-30 ma are capable of exploding explosive vapor-air and gas-air mixtures. It was found necessary to develop an explosion-proof cramp. This cramp is used for connecting the wires from the measuring bridge to the checked object and is

APPROVED FOR RELEASE: 06/20/2000 CIA-RDP86-00513R001446210016-6"

"APPROVED FOR RELEASE: 06/20/2000 CIA-RDP86-00513R001446210016-6

90-58-4-1/6

Safe Method for Electrical Tests on Oil Refinery Premises Filled with Explosive Fumes

shown in Figures 6 and 7. It consists of a screw with a chamber. In the chamber there are 2 mobile and 2 immobile contacts for the current and potential wires. The chamber has a displacement volume of 0,175 cm^3. If there is a spark during connection the volume is so small that even a mixture of hydrogen and air is not dangerous. The minor explosion does not spread outside. The measuring bridge is installed at least 20 m outside the danger area. The bridge is switched on after the cramps have been installed. Grounding resistance is measured by means of the device MS-C7. This device must also be installed 20 m outside of the danger zone.
There are 7 figures.

AVAILABLE: Library of Congress

Card 4/4

1. Petroleum 2. Electrical equipment-Safety devices
3. Electrical equipment-Safety measures

APPROVED FOR RELEASE: 06/20/2000 CIA-RDP86-00513R001446210016-6"

"APPROVED FOR RELEASE: 06/20/2000 CIA-RDP86-00513R001446210016-6

RUVINSKIY, V.A.; YENGIBAROVA, R.N.

Methods of safely conducting electrical measurements in places subject ot explosion. Trudy VNIITB no.10:152-163 '58. (MIRA 15:5)

(Petroleum industry--Electric equipment)

APPROVED FOR RELEASE: 06/20/2000 CIA-RDP86-00513R001446210016-6"

"APPROVED FOR RELEASE: 06/20/2000 CIA-RDP86-00513R001446210016-6

GUMELYA, A.N., inzh.; RUVINSKIY, Z.L., inzh.

Overhead communication lines on reinforced concrete stayed poles. Stroi.truboprov. 3 no.11:9-13 N '58. (MIRA 11:12)
(Telecommunications) (Reinforced concrete construction)

APPROVED FOR RELEASE: 06/20/2000 CIA-RDP86-00513R001446210016-6"

"APPROVED FOR RELEASE: 06/20/2000 CIA-RDP86-00513R001446210016-6

RUVINSKIY, Z.L., inzh., mladshiy nauchnyy sotrudnik

Lightweight porous fillers for concrete and methods for their production. Vest.sviazi 18 no.11:11-12 N '58. (MIRA 11:12)

1. TSentral'nyy nauchno-issledovatel'skiy institut svyazi.
(Aggregates (Building materials)

APPROVED FOR RELEASE: 06/20/2000 CIA-RDP86-00513R001446210016-6"

"APPROVED FOR RELEASE: 06/20/2000 CIA-RDP86-00513R001446210016-6

BERMANT, Anisim Fedorovich, professor; RUVKIN, A.Z., redaktor; TUMARKINA, N.A., tekhnicheskiy redaktor

[A course in mathematical analysis] Kurs matematicheskogo analiza. Izd. 6-oe, sterotip. Moskva, Gos. izd-vo tekhniko-teoret. lit-ry. Pt.2. 1956. 358 p. (MLRA 9:10)
(Calculus)

APPROVED FOR RELEASE: 06/20/2000 CIA-RDP86-00513R001446210016-6"

"APPROVED FOR RELEASE: 06/20/2000 CIA-RDP86-00513R001446210016-6

RUSZCZEWSKI, Zygmunt; ZAWADZKI, Ryszard; GRYNSZTAJN, Adam; KAPUSCINSKA, Wanda; RUTINSKI, Bohdan; WIECZOREK, Miroslaw; SZOZDA, Mieczyslaw

Anatomic and pathologic studies on the effect of cotton dust on the respiratory tract. Polski tygod. lek. 9 no.50:1602-1604 13 Dec 54.

1. Z Zakladu Anatomii Patologicznej A.M.w Lodiz; kierownik: prof. dr A.Pruszczynski.

(RESPIRATORY TRACT, physiology,
eff. of cotton dust, autopsy findings in subjects exposed to dust)
(DUST,
cotton dust, eff. on resp. tract, autopsy findings in subjects exposed to dust)
(COTTON,
cotton dust, eff. on resp. tract, autopsy findings in subjects exposed to dust)

APPROVED FOR RELEASE: 06/20/2000 CIA-RDP86-00513R001446210016-6"

"APPROVED FOR RELEASE: 06/20/2000 CIA-RDP86-00513R001446210016-6

AID P - 3611

Subject : USSR/Electricity

Card 1/2 Pub. 28 - 2/7

Author : Ruvinskiy, D. A.

Title : New method for locating a short circuit in a 380 volt network supplying power to deep oil pumps

Periodical : Energ. byul., 10, 7-10, 1955

Abstract : The author points to many inconveniences and difficulties in locating the short circuit in high-voltage systems by conventional methods. He presents his own method for location of the short circuit spot in the 380 volt-network, commonly used in the oil fields to operate deep oil pumps. This method eliminates the necessity of a cumbersome, step-by-step inspection the many branches of a whole line, using current reduced to only a few amperes by a 380/12 volt 100/250 watt-transformer, plain current-measuring instrument and a hook-up illustrated by 2 diagrams.

RELEASE: 06/20/2000 CIA-RDP86-00513R001446210016-6

"APPROVED FOR RELEASE: 06/20/2000 CIA-RDP86-00513R001446210016-6

RUVINSKIY, V.A.

Power supply for water-pumping compressor stations in oil fields. Energ. biul.no.7:5-11 Jl '56. (MLRA 9:10)
(Pumping stations) (Electric power) (Compressors)

APPROVED FOR RELEASE: 06/20/2000 CIA-RDP86-00513R001446210016-6"

"APPROVED FOR RELEASE: 06/20/2000 CIA-RDP86-00513R001446210016-6

GUMELYA, Anton Nikolayevich; RUVINSKIY, Zinoviy Lazarevich; LIBERMAN, V.G., otvetstvennyy redaktor; DOBRYNINA, A.Ya., redaktor; SUSHKEVICH, V.I., tekhnicheskiy redaktor

[Preparation of reinforced concrete supports and attachments in building yards] Izgotovlenie zhelezobetonnykh opor i pristavok na poligonakh. Moskva, Gos. izd-vo lit-ry po voprosam sviazi i radio, 1956. 48 p. (MLRA 10:3)

(Precast concrete)

APPROVED FOR RELEASE: 06/20/2000 CIA-RDP86-00513R001446210016-6"

"APPROVED FOR RELEASE: 06/20/2000 CIA-RDP86-00513R001446210016-6

RUUS, C.

The cohabitation of geese. p. 364.

GAZ, WODA I TECHNIKA SANITARNA (Stowarzyszenie Naukowo-Techniczne Inzynierow i Technikow Sanitarnych, Ogrzewnictwa i Gazownictwa) Warszawa, Poland, Vol. 13, no. 8, Aug. 1958.

Monthly list of East European Accession (EEAI) LC, Vol. 9, no. 2, Feb. 1960

Uncl.

APPROVED FOR RELEASE: 06/20/2000 CIA-RDP86-00513R001446210016-6"

"APPROVED FOR RELEASE: 06/20/2000 CIA-RDP86-00513R001446210016-6

NOWICKA, H.; SZENDZIKOWSKI, S.; RUWINSKI, B.

Trichobezoar of the stomach. Polski tygod. lek. 14 no.11:489-491 16 Mar 59.

1. (Z Pracownii Radiologicznej Szpitala im. Korczaka w Lodzi; kierownik: H. Nowicka i z Zakladu Anatomii Patologicznej A.M. w Lodzi; kierownik: prof. dr med. A. Pruszczynsk). Dr. s. Szendzikowski Lodz, ul. Nowotki 84 B. m. 6.

(BEZOARS, in inf. & child
trichobezoar of stomach, case report (Pol))

APPROVED FOR RELEASE: 06/20/2000 CIA-RDP86-00513R001446210016-6"

"APPROVED FOR RELEASE: 06/20/2000 CIA-RDP86-00513R001446210016-6

RUYBENE, E.P.

Some diagnostic indices of the activity of the rheumatic process in children during the period of its quiescence. Pediatriia no.8: 45-48 '62. (MIRA 15:10)

1. Iz Instituta eksperimental'noy meditsiny (dir. - dotsent B.R. Penkauskas) AN Litovskoy SSR nauchnyy rukovoditel' - deystvitel'nyy chlen AMN SSSR prof. O.D.Sokolova-Ponomareva.
(RHEUMATIC FEVER)

APPROVED FOR RELEASE: 06/20/2000 CIA-RDP86-00513R001446210016-6"

"APPROVED FOR RELEASE: 06/20/2000 CIA-RDP86-00513R001446210016-6

L 14348-65 EWT(m)/EWP(t)/EWP(b) AFWL/SSD JD
ACCESSION NR: AP4046663 S/0185/64/009/009/1009/1015

AUTHOR: Ruvins'ky*y, M. A. (Ruvinskiy, M. A.)

TITLE: Interaction of nonlocalized Mott excitons with dislocations

SOURCE: Ukrayins'ky*y fizy*chny*y zhurnal, v. 9, 1964, 1009-1015

TOPIC TAGS: exciton interactions, elastic exciton scattering, inelastic exciton scattering, exciton free path, exciton-dislocation interaction, dislocation zone

ABSTRACT: The elastic and inelastic scattering of excitons at screw dislocations were investigated, localized electrons around the nucleus of the dislocation being taken into account, and the time and free paths of excitons during elastic scattering at the edge dislocations were calculated. The results show that in an NaCl crystal at a temperature $T \approx 6K$, with an impurity concentration $N_i \approx 10^{15} - 10^{16}$ cm^{-3} and dislocation density $N_d \approx 10^6$ cm^{-2}, the free paths of excitons are determined essentially by interaction with dislocations. The main role among the investigated inelastic scattering processes is played by a process associated with the excitation of only a continuous spectrum of electrons localized in the neighborhood of the dislocation (dislocation zones). In all

Card 1/2

APPROVED FOR RELEASE: 06/20/2000 CIA-RDP86-00513R001446210016-6"

"APPROVED FOR RELEASE: 06/20/2000 CIA-RDP86-00513R001446210016-6

L 14348-65
ACCESSION NR: AP4045663

2

cases it was assumed that the inner state of the exciton does not change. "The author thanks Prof. A. Yu. Glauberman for guiding the work." Orig. art has: 26 formulas.

ASSOCIATION: Drogobits'ky*y pedinsty*tut im. I. Ya. Franka (Drogobych Pedagogical Institute)

SUBMITTED: 28Oct63 ENCL: 00 SUB CODE: SS

NO REF SOV: 007 OTHER: 000

Card 2/2

APPROVED FOR RELEASE: 06/20/2000 CIA-RDP86-00513R001446210016-6"

"APPROVED FOR RELEASE: 06/20/2000 CIA-RDP86-00513R001446210016-6

L 41745-66 EWT(1)/EWT(m)/T/EWP(t)/ETI IJP(c) JD/AT

ACC NR: AP6018040 SOURCE CODE: UR/0185/66/011/006/0673/0675

AUTHOR: Glauberman, A. Yu.; Ruvins'kyy, M. A.--Ruvinskiy,

ORG: L'vov State University im. I. Franko (L'vivs'kyy derzhuniversytet)

72
B

TITLE: Capture of free Wannier-Mott excitons in atomic crystals by shallow traps

SOURCE: Ukrayins'kyy fizychnyy zhurnal, v. 11, no. 6, 1966, 673-675

TOPIC TAGS: exciton, phonon, wave function, Schroedinger equation, capture cross section, energy band structure, crystal theory

ABSTRACT: The authors present the results of a quantum-mechanical analysis of the thermal capture of free excitons in atomic crystals by shallow traps whose energies lie at a distance smaller than the Debye end-point energy of the phonon below the bottom of the exciton band. The interaction between the exciton and the phonons is described with the aid of a Bardeen-Shockley potential. The probability of the process is calculated by using for the initial state a wave function obtained by solving the Schroedinger equation for the free exciton in the field of a singly-charged Coulomb center. The value obtained for the cross section of capture of the free Wannier-Mott excitons by this method is found to be the same as obtained by the methods of classical mechanics. Orig. art. has: 4 formulas.

SUB CODE: 20/ SUBM DATE: 11Jan66/ ORIG REF: 003/ OTH REF: 005

Card 1/1

APPROVED FOR RELEASE: 06/20/2000 CIA-RDP86-00513R001446210016-6"

"APPROVED FOR RELEASE: 06/20/2000 CIA-RDP86-00513R001446210016-6

RUIDALCHUK, S. A.

PORC LAIN PYROMETER TUBES. S.A. RUIDALCHUK (KERAM I STEKLO 1935, 11, (11) 22-26. C. Abs. 1936, 30, 4285) (in Russian) Briefly described experiments to determine mechanical properties, thermal, resista co, effect of diameter on thermal resistance, temperature of softening, coeff. of expansion, thermal conductivity and chemical stability. SG Immediate source clipping

APPROVED FOR RELEASE: 06/20/2000 CIA-RDP86-00513R001446210016-6"

"APPROVED FOR RELEASE: 06/20/2000 CIA-RDP86-00513R001446210016-6

RUYAYA, S.M.; SOLOV'YEVA, N.K.

Comparative characteristics of strains of Act. rimosus (producer of oxytetracycline) and experimentally produced variants. Mikrobiologiia 29 no.3:433-440 My-Je '60. (MIRA 13:7)

1. Vsesoyuznyy nauchno-issledovatel'skiy institut antibiotikov.
(ACTINOMYCES) (TERRAMYCIN)

APPROVED FOR RELEASE: 06/20/2000 CIA-RDP86-00513R001446210016-6"

"APPROVED FOR RELEASE: 06/20/2000 CIA-RDP86-00513R001446210016-6

RUIDALCHUK, S. A.

PORC LAIN PYROMETER TUBES. S.A. RUIDALCHUK (KERAM I STEKLO 1935, 11, (11) 22-26. C. Abs. 1936, 30, 4285) (in Russian) Briefly describes experiments to determine mechanical properties, thermal, resistance, effect of diameter on thermal resistance, temperature of softening, coeff. of expansion, thermal conductivity and chemical stability. SG Immediate source clipping

APPROVED FOR RELEASE: 06/20/2000 CIA-RDP86-00513R001446210016-6"

"APPROVED FOR RELEASE: 06/20/2000 CIA-RDP86-00513R001446210016-6

RUYATKIN, V.A., inzhener-lesomeliorator.

Speeding up the growth of protective oak tree shelter belts.
Put' i put. khoz. no.7:38-39 Jl '57. (MLRA 10:8)
(Windbreaks, shelter belts, etc.)

APPROVED FOR RELEASE: 06/20/2000 CIA-RDP86-00513R001446210016-6"

"APPROVED FOR RELEASE: 06/20/2000 CIA-RDP86-00513R001446210016-6

RUESS, H.

Composition of the Alpine salt clays. O. SCHAUBERGER AND H. RUESS. *Berg.-u. hüttenmänn. Montash. montan. Hochschule Leoben*, 96 [9] 187-95 (1951).—The geographical and geological conditions of the clays which appear in four modifications are described. The chemical analyses are given for all modifications in detail: alumina silicate (clay substance + mica) 0 to 58%, Mg silicate 0 to 20%, and quartz 0 to 22%. The density is between 2.71 and 2.85. 9 references. M.HA.

APPROVED FOR RELEASE: 06/20/2000 CIA-RDP86-00513R001446210016-6"

"APPROVED FOR RELEASE: 06/20/2000 CIA-RDP86-00513R001446210016-6

CA

Spectroscopic determination of arsenic in lead oxide. R. V. Ruyitskaya. *Zavodskaya Lab.* 16, 100-7(1950).—The use of an a... arc excitation permits the approx. detn. of 0.0001-0.0000% concns. of As, by means of the 2349.84 A. line of As. G. M. Kosolapoff

APPROVED FOR RELEASE: 06/20/2000 CIA-RDP86-00513R001446210016-6"

"APPROVED FOR RELEASE: 06/20/2000 CIA-RDP86-00513R001446210016-6

CA

4

Spectral analysis in electrical battery production. Kh. Kh. Zak and R. V. Ruvinskaya. *Izvest. Akad. Nauk S.S.S.R., Ser. Fiz.* 14, 635-9(1950). Pb powder for battery is melted in an elec. arc to form electrodes for a Frussner type spark generator. Concns. of Bi (0.001-0.01%) and Cu (0.0015-0.01%) were detd. with the line pairs Cu 3247.5 – Pb 3210.2 A. and Bi 3217.7 – Pb 3118.9 A. The working curve of As in concns. 0.0007-0.05% was based on relative intensities of the As line 2349.8 and the adjoining mod. As spectrum. Tl 0.0002-0.01, Zn 0.002-0.05, Pb 0.001-0.10, and Cu 0.02-0.03% were detd. in Cd in an a.-c. arc discharge with the line pairs of Tl 3519.21, Zn 3345, Pb 2614.20, Cu 3273.96, and the Cd line 3250.29. At higher concns. of Cu (0.02-0.10%), a Frussner generator was used.

S. Pakswer

1951

APPROVED FOR RELEASE: 06/20/2000 CIA-RDP86-00513R001446210016-6"

"APPROVED FOR RELEASE: 06/20/2000 CIA-RDP86-00513R001446210016-6

RUVMAN, B.S.

Rickets control in infants during the first year of life. Vop.okh. mat. i det. 2 no.1:62-63 Ja-F '57. (MLRA 10:2)

1. Iz kafedry gospital'noy pediatrii i propedevtiki detskikh bolezney (zav. - prof. T.L.Mariupol'skaya) Omskogo gosudarstvennogo meditsinskogo instituta.
(RICKETS) (INFANTS--DISEASES)

APPROVED FOR RELEASE: 06/20/2000 CIA-RDP86-00513R001446210016-6"

"APPROVED FOR RELEASE: 06/20/2000 CIA-RDP86-00513R001446210016-6

RUXANDRU C.

RUMANIA/Chemical Technology. Chemical Products and Their Applications. Chemical Processing of Natural Gases and Petroleum. Motor and Rocket Fuels. Lubricants.

Abs Jour : Ref Zhur-Khimiya, No 7, 1959, 24877

Author : Ruxandru, C.
Inst : -
Title : Testing of Lubes Containing Indigenous Additivns on Tractor Engines KDR-35 and RNR.

Orig Pub : An. Inst. cercetari mecaniz. si electrif. agric., 1958, 2, 152-163

Abstract : Presented are the results of the tests performed on various motor lubes containing indigenous and imported additives. It is shown here that the indigenous additive

Card : 1/2

H-107

Chemical Technology. Chemical Products and Their Applications. Chemical Processing of Natural Gases and Petroleum. Motor and Rocket Fuels. Lubricants.

Abs Jour : Ref Zhur-Khimiya, No 7, 1959, 24877

APPROVED FOR RELEASE: 06/20/2000 CIA-RDP86-00513R001446210016-6"

ICEP-6 may replace the Soviet additive AZNII-4. -- M. Rudenko

Card : 2/2

"APPROVED FOR RELEASE: 06/20/2000 CIA-RDP86-00513R001446210016-6

SEMENOVA, V.A.; SOLOV'YEVA, N.K.; RUYANOVSKAYA, I.S.; DMITRIYEVA, V.S.; TRAKHTENBERG, D.M.; RODIONOVSKAYA, E.I.; CHERENKOVA, L.V.; KHOKHLOV, A.S.; BYCHKOVA, M.M.; GINZBURG, G.N.

Antibiotic phytobacteriomycin, effective in controlling bacteriosis in plants. Trudy Vses. inst. sel'khoz. mikrobiol. 17:131-139 '60. (MIRA 15:3)

(Antibiotics) (Bacteria, Phytopathogenic)

APPROVED FOR RELEASE: 06/20/2000 CIA-RDP86-00513R001446210016-6"

"APPROVED FOR RELEASE: 06/20/2000 CIA-RDP86-00513R001446210016-6

RUYKOVICH, Viktor

Composer's portrait. Sov.foto 20 no.4:18 Ap '60.
(MIRA 13:8)

1. Fotokorrespondent zhurnala "Sovetskiy Soyuz"
(Solov'ev-Sedoi, Vasilii Pavlovich, 1907-)

APPROVED FOR RELEASE: 06/20/2000 CIA-RDP86-00513R001446210016-6"

"APPROVED FOR RELEASE: 06/20/2000 CIA-RDP86-00513R001446210016-6

NEYELOV, O.; GENDE-ROTE, V.; ZEL'MA, G.; RUYKOVICH, V.; STANOVOV, A.; GRANOVSKIY, N.; RED'KIN, M.; KHLEBNIKOV, A.; PORTER, L.; KOPOSOV, G.

Let's talk about your snapshots. Sov.foto 23 no.1:42-45 Ja '63. (MIRA 16:5)

1. Chlen moskovskoy fotosektsii Soyuza zhurnalistov SSSR (for Neyelov). 2. Fotokorrespondenty TASS (for Gende-Rote, Granovskiy, Red'kin, Porter). 3. Fotokorrespondenty zhurnala "Sovetskaya zhenshchina" (for Zel'ma, Stanovov). 4. Fotokorrespondent zhurnala "Sovetskiy Soyuz" (for Ruykovich). 5. Predsedatel' Moskovskogo fotokluba (for Khlebnikov). 6. Fotokorrespondent zhurnala "Ogonek" (for Koposov).

(Photography)

APPROVED FOR RELEASE: 06/20/2000 CIA-RDP86-00513R001446210016-6"

"APPROVED FOR RELEASE: 06/20/2000 CIA-RDP86-00513R001446210016-6

RUINSKAVA, F. S.

The combined effect of radiation and catalysts. I. The effect of ultraviolet light on the catalytic activity of catalysts in the catalytic decomposition of hydrogen peroxide in water solutions. L. V. Pisarzhevskii, R. K. Korabel'nik, and F. S. Ruinskava Bull.acad.sci. U.R.S.S., Classe sci math. nat. 1934, 931-50(in German 951) --Irradiation of the catalyst during the catalytic decompn. of H_2O_2 almost tripled the rate of decompu. when graphic was used. The effect was smaller for PhO_2, and still smaller or even neg. for smooth or slightly platinized Pt. Some discussion of the theory is given S. Katzoff

S.M.

APPROVED FOR RELEASE: 06/20/2000 CIA-RDP86-00513R001446210016-6"

"APPROVED FOR RELEASE: 06/20/2000 CIA-RDP86-00513R001446210016-6

RUIZHANOV, S.

537.312.5 = 82 115

Contribution to the theory of photo-electric conductivity of allochromatic crystals. RUIZHANOV, S. *J. Exp. Theor. Phys.*, 16 (*No.* 3) 229-45 (1946) *In Russian.*—Expressions are derived for the displacement with temperature of the frequency of the selective maximum for the *F* and *V* bands, assuming that the photo-electric conductivity is related to a direct transition of the electrons into the dielectric conductivity band. Electron displacement and its temperature dependence is discussed. A.

APPROVED FOR RELEASE: 06/20/2000 CIA-RDP86-00513R001446210016-6"

"APPROVED FOR RELEASE: 06/20/2000 CIA-RDP86-00513R001446210016-6

RUIZHANOV, S. J.

537.312.5 = 82

Contribution to the theory of photo-electric conductivity of allochromatic crystals. RUIZHANOV, S. J. *J. Exp. Theor. Phys.*, 16 (*No.* 3) 229-45 (1946) *In Russian.*—Expressions are derived for the displacement with temperature of the frequency of the selective maximum for the *F* and *V* bands, assuming that the photo-electric conductivity is related to a direct transition of the electrons into the dielectric conductivity band. Electron displacement and its temperature dependence is discussed. A.

APPROVED FOR RELEASE: 06/20/2000 CIA-RDP86-00513R001446210016-6"

"APPROVED FOR RELEASE: 06/20/2000 CIA-RDP86-00513R001446210016-6

RUIZHOV, V. P.

The effect of catalysts and of antitcatalysts on the kinetics and mechanism of the oxidation of sulfur dioxide with ozone. L. I. Kashuenov and V. P. Ruizhov. J. Gen. Chem. (U. S. S. R.) 6, 732–47(1936); cf. C. A. 30, 6732[8].—The oxidation of SO_2 by O_3 is not affected by the presence of phenol (catalyst poison) because the phenol is oxidized by O_3 to quinone, a nonpoison. The rate of gas passage affects neither the rate nor the degree of oxidation. The percentage of oxidation and the rate increase with rise in temp. and with increase of SO_2 concn. in the soln., the increase in rate being especially marked in the temp. interval 20-40°. The rate of oxidation and the utilization of O_3 decrease with increase of H_2SO_4 concn. in the absorbing soln. The stoichiometric coeff. increases with increase of SO_2 concn. in the initial phase and with decrease in O_3 concn. The poisoned catalyst is not regenerated by O_3 in the presence of SO_2 at 20°. Phenol and $MnSO_4$ do not exert an effect on either the stoichiometric coeff. or the rate of reaction in the temp. limits studied. The presence of Mn salts in the absorber soln. markedly raises, with increase in acidity, both the degree of oxidation and the value of the stoichiometric coeff. Accumulation of H_2SO_4 in the adsorber does not hinder the use of O_3 as a means of removing SO_2 from flue gases. John Livak

APPROVED FOR RELEASE: 06/20/2000 CIA-RDP86-00513R001446210016-6"

"APPROVED FOR RELEASE: 06/20/2000 CIA-RDP86-00513R001446210016-6

RUZ, Roman Zakharovich; ARKHIPOV, Ivan Andreyevich; ILYUSHIN, A.P., red.; EL'KINA, E.M., tekhn. red.

[Organization and technique in the sale of industrial goods] Organizatsiia i tekhnika torgovli promyshlennymi tovarami. Izd.2., perer. Moskva, Ekonomika, 1964. 231 p. (MIRA 17:2)

APPROVED FOR RELEASE: 06/20/2000 CIA-RDP86-00513R001446210016-6"

"APPROVED FOR RELEASE: 06/20/2000 CIA-RDP86-00513R001446210016-6

15.8061

45275

S/190/61/003/007/019/021
B101/B230

AUTHORS: Ryšavy, D., Balaban, L., Slavik, V., Ruža, J.

TITLE: Oxidation of isotactic polypropylene

PERIODICAL: Vysokomolekulyarnyye soyedineniya, v. 3, no. 7, 1961, 1110 - 1115

TEXT: Polypropylene being processed at very high temperatures, the target of the present paper was to study the oxidation of isotactic polypropylene at 120 - 150°C. For all experiments, polypropylene of a molecular weight of 400,000, ash contents 0.5 % was used. Absorption of oxygen was measured at atmospheric pressure by heating the polypropylene in a reaction vessel filled with O_2. Decrease of volume due to absorption of O_2 was determined visually by means of a graduated, horizontal, U-shaped capillary tube (total length about 1300 mm) filled with mercury, or a platinum wire (diameter 0.1 mm) was fused into the capillary tube and the change of reactance, due to the shift of the mercury within the capillary

Card 1/5

APPROVED FOR RELEASE: 06/20/2000 CIA-RDP86-00513R001446210016-6"

"APPROVED FOR RELEASE: 06/20/2000 CIA-RDP86-00513R001446210016-6

tube, was measured by a Wheatstone bridge. Volatile acids were determined by passing O_2 through the heated reaction vessel and subsequent bubbling through $Ba(OH)_2$. Acid quantity absorbed was determined by titration. For determining the acetaldehyde and formaldehyde, the gaseous products were trapped in a 0.1 molar solution of LiOH; the aldehydes were determined by polarography. Acetic acid was determined by conversion to calcium acetate, heating to high temperature, and reacting the acetone produced with o-nitro-benzaldehyde in alkaline medium. Reducing the sample with magnesium powder, presence of formic acid was proved by drop reaction with phenylhydrizin hydrochloride and potassium ferrocyanide. Passing the reaction products with O_2 in the absorber failed to turn out reproducible results. These were obtained by following arrangement of experiment: A test tube, lined inside with solid KOH, was placed into the reaction vessel. Into this test tube the polymer film (0.1 mm thick, weight 0.03 g) wound around a glass tube was introduced leaving a clearance of about 3 mm between KOH and film. Fig. 5 shows the experiment results at 150°C. The maximum oxidation rate w was rapidly attained after the beginning of

APPROVED FOR RELEASE: 06/20/2000 CIA-RDP86-00513R001446210016-6"

"APPROVED FOR RELEASE: 06/20/2000 CIA-RDP86-00513R001446210016-6

oxidation. It was depending on the surface area of the sample and, herewith, on the rate of diffusion. After consuming 0.73 moles of O_2 per mole of monomer links, oxidation ceased. About 50 % of the original weight of the sample were left over. In the oxidation products were found: acetic and formic acids; acetaldehyde and formaldehyde occurred only in subsequent phases of oxidation. For formaldehyde, merely qualitative determination was possible, probably, for being oxidized either to formic acid or to CO_2. Formation of acetaldehyde and acid products was in correspondence with the Arrhenius equation. For the formation of volatile acids E = 22 kcal, for the formation of acetaldehyde E = 30.4 kcal was calculated. Various possible types of reactions were discussed: 1) Isomerization of the peroxide radicals with formation of formaldehyde and acetaldehyde; 2) decomposition of peroxides with formation of alcohol groups in the chain; 3) breaking the chain and decomposition of hydroperoxide; formation of the radical $CH_2\text{-}\overset{CH_3}{\overset{|}{C}}H\text{-}R_2$ forming again a peroxide;

APPROVED FOR RELEASE: 06/20/2000 CIA-RDP86-00513R001446210016-6"

"APPROVED FOR RELEASE: 06/20/2000 CIA-RDP86-00513R001446210016-6

25215 S/190/61/003/007/019/021
B101/B230

Oxidation of isotactic polypropylene

this may decompose a) forming an alcohol group at the end of the chain; b) forming formaldehyde and acetaldehyde. From Fig. 5 it is deduced that the rate of formation of volatile acids is lower by two orders of magnitude than the rate of O_2 absorption. At maximum oxidation rate merely 8 % are ascribed to reactions 1) and 3b). Accordingly, in the first phase of oxidation, predominantly alcohols are formed. Mentioned are: V. B. Miller, M. V. Neyman, V. S. Pudov, Yu. A. Shlyapnikov, and L. I. Lafer. There are 6 figures and 5 references: 4 Soviet-bloc and 1 non-Soviet-bloc. The reference to English-language publication reads as follows: W. L. Hawkins, W. Matreyek, F. H. Winslow. Papers presented at Boston Meeting of American Chemical Society, 19, 30, 1959.

ASSOCIATION: Scientific Research Institute of Macromolecular Chemistry, Brno

SUBMITTED: January 7, 1961

Card 4/5

APPROVED FOR RELEASE: 06/20/2000 CIA-RDP86-00513R001446210016-6"

"APPROVED FOR RELEASE: 06/20/2000 CIA-RDP86-00513R001446210016-6

RUZA, J.

Stanek, J. Technical and economic indexes as a means for more economical utilization of capital investment. p. 208.
ZA SOCIALISTICKOU VEDU A TECHNIKU, Prague, Vol. 4, no. 5, May 1954.

SO: Monthly List of East European Accessions, (EEAL), LC, Vol. 5, No. 6, June 1956, Uncl.

APPROVED FOR RELEASE: 06/20/2000 CIA-RDP86-00513R001446210016-6"

"APPROVED FOR RELEASE: 06/20/2000 CIA-RDP86-00513R001446210016-6

RUZA, Lukacic-Ocak, d-r; RUZICA, Ilic, d-r

Progressive vision loss in glaucoma simplex chronicum after fistulation operation and induction of intraocular hypotension. Med. arh., Sarajevo 13 no.5:27-30 S-O '59.

1. Ocna klinika Medicinskog fakulteta u Beogradu, upravnik: prof. d-r Vladimir Cavka.
(GLAUCOMA surg.)

APPROVED FOR RELEASE: 06/20/2000 CIA-RDP86-00513R001446210016-6"

"APPROVED FOR RELEASE: 06/20/2000 CIA-RDP86-00513R001446210016-6

RUZA, S. ; TESAR, A.

12th Congress of the International Institute of Welding in Opatija, Yugoslavia.
p. 286.

ZVARANIE. (Ministerstvo hutneho prumyslu a rudnych bani a Ministerstvo strojareustva)
Bratislava, Estonia.
Vol. 8, no. 9, Sept. 1959

Monthly List of East European Accessions (EEAI) Lc, Vol. 8, no. 11
November 1959

Uncl.

APPROVED FOR RELEASE: 06/20/2000 CIA-RDP86-00513R001446210016-6"

"APPROVED FOR RELEASE: 06/20/2000 CIA-RDP86-00513R001446210016-6

RUZA, S.

Production of welded presses in the German Democratic Republic. p.144.
(Zaranie, Vol. 6, No. 5, May 1957, Bratislava, Czechoslovakia)

SO: Monthly List of East European Accessions (EEAL) LC. Vol. 6, No. 9, Sept. 1957. Uncl.

APPROVED FOR RELEASE: 06/20/2000 CIA-RDP86-00513R001446210016-6"

"APPROVED FOR RELEASE: 06/20/2000 CIA-RDP86-00513R001446210016-6

RUZA, J.

What Soviet welding scientists are writing about at the present time.

P. 331. (ZVARANIE.) (Bratislava, Czechoslovakia) Vol. 6, No. 11, Nov. 1957

SO: Monthly Index of East European Accession (EEAI) LC. Vol. 7, No. 5, 1958

APPROVED FOR RELEASE: 06/20/2000 CIA-RDP86-00513R001446210016-6"

"APPROVED FOR RELEASE: 06/20/2000 CIA-RDP86-00513R001446210016-6

RUZA, S.

The 1957 international welding congress in Smolenice.

P. 354. (ZVARANIE) (Bratislava, Czechoslovakia) Vol. 6, no. 12, Dec. 1957

SO: Monthly Index of East European Accession (EEAI) LC Vol. 7, No. 5, 1958

APPROVED FOR RELEASE: 06/20/2000 CIA-RDP86-00513R001446210016-6"

"APPROVED FOR RELEASE: 06/20/2000 CIA-RDP86-00513R001446210016-6

RUZA, S.

Academican v. P. Nikitin is among us, p. 353, ZVARANIE (Ministerstvo hutneho prumhslu a rudnych bani a Ministerstvo strojarstvo) Baratislava, Vol. 3, No. 12, Dec. 1954

SOURCE: East European Accessions List (EEAL) Library of Congress, Vol. 4, No. 12, December 1955

APPROVED FOR RELEASE: 06/20/2000 CIA-RDP86-00513R001446210016-6"

"APPROVED FOR RELEASE: 06/20/2000 CIA-RDP86-00513R001446210016-6

RUZA, St.

"Welding of a machine part" by V.Makovicky, V.Michalec. Reviewed by St. Ruza. Zvaranie 12 no.11:340 N'63.

APPROVED FOR RELEASE: 06/20/2000 CIA-RDP86-00513R001446210016-6"

"APPROVED FOR RELEASE: 06/20/2000 CIA-RDP86-00513R001446210016-6

RUZA, Stanislav, inz.

Welding in India. Zvaranie 12 no. 12: 341-346 D '63.

1. Vyskumny ustav zvaracsky, Bratislava.

APPROVED FOR RELEASE: 06/20/2000 CIA-RDP86-00513R001446210016-6"

"APPROVED FOR RELEASE: 06/20/2000 CIA-RDP86-00513R001446210016-6

BUK, V.

Some notes on problems of soldering with flame. p. 72.
(Zvaranie, Vol. 4, no. 3, Mar. 1955, Praha.)

SO: Monthly List of East European Accession, (EEAL), LC, Vol. 4,
No. 11, Nov. 1955, Uncl.

APPROVED FOR RELEASE: 06/20/2000 CIA-RDP86-00513R001446210016-6"

"APPROVED FOR RELEASE: 06/20/2000 CIA-RDP86-00513R001446210016-6

RUZA, Viliam, inz.; LONGAUER, Jozef, dr.

Revision of weldability data in the quality standards of copper semi-products. Zvaranie 11 no.4:122-124 Ap '62.

1. Vyskumny ustav zvaracsky, Bratislava.

APPROVED FOR RELEASE: 06/20/2000 CIA-RDP86-00513R001446210016-6"

"APPROVED FOR RELEASE: 06/20/2000 CIA-RDP86-00513R001446210016-6

RUZA, Viliam, inz. CSc.

Properties of welds of the VUK electroconductive Al-Mg-Si-Fe alloy. Zvaranie 14 no.3:67-70 Mr '65.

1. Research Institute of Welding, Bratislava.

APPROVED FOR RELEASE: 06/20/2000 CIA-RDP86-00513R001446210016-6"

"APPROVED FOR RELEASE: 06/20/2000 CIA-RDP86-00513R001446210016-6

RUZA, Viliam, inz.

Flame soldering of Ti 99,5 and Ti-Al 5 - Sn 2,5. Stroj vyr 12 no.9:631-633 S '64.

1. Research Institute of Welding, Bratislava.

APPROVED FOR RELEASE: 06/20/2000 CIA-RDP86-00513R001446210016-6"

"APPROVED FOR RELEASE: 06/20/2000 CIA-RDP86-00513R001446210016-6

RUZA, V.

"Research into characteristic features of the Ms 60 hard alloys for brazing."

p. 235 (Zvaranie) Vol. 6, no. 8, Aug. 1957
Prague, Czechoslovakia

SO: Monthly Index of East European Accessions (EEAI) LC. Vol. 7, no. 4, April 1958

APPROVED FOR RELEASE: 06/20/2000 CIA-RDP86-00513R001446210016-6"

"APPROVED FOR RELEASE: 06/20/2000 CIA-RDP86-00513R001446210016-6

S/137/62/000/004/154/201
A060/A101

AUTHORS: Novotný, J., Ruža, V.

TITLE: 2nd International colloquium on welding of non-ferrous metals in Weimar (GDR)

PERIODICAL: Referativnyy zhurnal, Metallurgiya, no. 4, 1962, 2, abstract 4E8 ("Zváranie", 1961, 10, no. 11, 345 - 347, Slovak)

TEXT: A colloquium organized by the Central Institute for welding of the GDR (ZIS Halle) was held on 2 - 3 March, 1961, with the participation of numerous German and foreign specialists. The majority of the papers dealt with problems of welding Al and its alloys, but papers were also contributed which dealt with the spot welding of thin wires of Cu, Mo, and W in combination with Ni; on the welding of Ti and its alloys; of Ni alloys; on the mechanism of passing the metal through the arc in the course of welding in a protective gas environment. Discussions have shown that abroad greater attention is paid in particular to self-hardening Al-alloys possessing favorable mechanical characteristics for welded structures. Ye. Greyl'

[Abstracter's note: Complete translation]

Card 1/1

APPROVED FOR RELEASE: 06/20/2000 CIA-RDP86-00513R001446210016-6"

"APPROVED FOR RELEASE: 06/20/2000 CIA-RDP86-00513R001446210016-6

RUZHEK, I. Cnad Tech Sci -- (diss) "On the problem of increasing the effectiveness of the steps of presonic axial compressors." Mos, 1959. 12 pp (Min of Higher and Secondary Specialized Education USSR. Mos Order of Lenin and Order of Labor Red Banner Higher Tech School im Bauman), 120 copies (KL, 46-59, 138)

APPROVED FOR RELEASE: 06/20/2000 CIA-RDP86-00513R001446210016-6"

"APPROVED FOR RELEASE: 06/20/2000 CIA-RDP86-00513R001446210016-6

NOVOTNY, J., inz.; RUZA, V., inz.

Second International Conference on Welding of Nonferrous metals in Weimar. Zvaranie 10 no.11:345-347 N '61.

APPROVED FOR RELEASE: 06/20/2000 CIA-RDP86-00513R001446210016-6"

"APPROVED FOR RELEASE: 06/20/2000 CIA-RDP86-00513R001446210016-6

RUZA, V.

Characteristic properties of additional materials for soldering of metals. p. 398

STROJIRENSKA VYROBA. (Ministerstvo tezkeho strojirenstvi, Ministerstvo presneho strojirenstvi a Ministerstvo automobiloveho prumyslu a zemedelskych stroju) Praha, Czechoslovakia. Vol. 7, no. 9, Sept. 1959

Monthly List of East European Accessions (EEAI) LC, Vol. 8, No. 12, Dec. 1959
Uncl.

APPROVED FOR RELEASE: 06/20/2000 CIA-RDP86-00513R001446210016-6"

"APPROVED FOR RELEASE: 06/20/2000 CIA-RDP86-00513R001446210016-6

RUZA, V.

Technological properties of fluxes for soldering. p. 445

STROJIRENSKA VYROBA. (Ministerstvo tezkeho strojirenstvi, Ministerstvo presneho strojirenstvi a Ministerstvo automobiloveho prumyslu a zemedelskych stroju) Praha, Czechoslovakia. Vol. 7, no. 10, Oct. 1959

Monthly List of East European Accessions (EEAI) LC, Vol. 8, No. 12, Dec. 1959
Uncl.

APPROVED FOR RELEASE: 06/20/2000 CIA-RDP86-00513R001446210016-6"

"APPROVED FOR RELEASE: 06/20/2000 CIA-RDP86-00513R001446210016-6

RUZA, Viliam inz.

Revision of the Czechoslovak standards on fusion weldability for aluminum semi-products. Zvaranie 11 no.2:57-61 F '62.

1. Vyskumny ustav svaracsky, Bratislava.

APPROVED FOR RELEASE: 06/20/2000 CIA-RDP86-00513R001446210016-6"

"APPROVED FOR RELEASE: 06/20/2000 CIA-RDP86-00513R001446210016-6

RUZA, V.

Capillary soldering of metals by induction heating. p. 211.

ZVARANIE. (Ministerstvo hutneho prumyslu a rudnych bani a Ministerstvo strojarenstva) Bratislava, Czechoslovakia. Vol. 8, no. 7, July 1959.

Monthly list of East European Accessions (EEAI) LC, Vol. 8, no. 10, Oct. 1959. Uncl.

APPROVED FOR RELEASE: 06/20/2000 CIA-RDP86-00513R001446210016-6"

"APPROVED FOR RELEASE: 06/20/2000 CIA-RDP86-00513R001446210016-6

RUZA, V.

Capillary soldering in furnaces with shielding stmosphere. p.230.

ZVARANIE. (Ministerstvo hutneho prumyslu a rudnych bani a Ministerstvo strojareustva)
Bratislava, Estonia
Vol. 8, no. 8, Aug. 1959

Monthly List of East European Accessions (EEAI) LC, Vol. 8, No. 11.
Nov. 1959
Uncl.

APPROVED FOR RELEASE: 06/20/2000 CIA-RDP86-00513R001446210016-6"

"APPROVED FOR RELEASE: 06/20/2000 CIA-RDP86-00513R001446210016-6

RUZA, V.

Capillary soldering of metals. p. 34

ZVARANIE. Bratislava, Czechoslovakia. Vol. 8, no. 2, Feb. 1959

Monthly List of East European Accessions (EEAI), LC. Vol. 8, No. 9, September 1959
uncl.

APPROVED FOR RELEASE: 06/20/2000 CIA-RDP86-00513R001446210016-6"

"APPROVED FOR RELEASE: 06/20/2000 CIA-RDP86-00513R001446210016-6

RUZA, V.

"Some results of problems of capillary soldering of metals." p. 259.

STROJIRENSKA VYROBA. (MINISTERSTVO TEZKEHO STROJIRENSTVI, MINISTERSTVO PRESNEHO STROJIRENSTVI A MINISTERSTVO AUTOMOBILOVEHO PRUMYSLU A ZEMEDELSKYCH STROJU.) Praha, Czechoslovakia, Vol. 7, no. 6, June 1959.

Monthly List of East European Accessions (EEAI), LC, Vol, 8, No. 9, September 1959. Uncl.

APPROVED FOR RELEASE: 06/20/2000 CIA-RDP86-00513R001446210016-6"

"APPROVED FOR RELEASE: 06/20/2000 CIA-RDP86-00513R001446210016-6

RUZA, V.

RUZA, V. Testing brazing material. p. 136

Vol. 5, no. 5, May 1956
ZVARANIE
TECHNOLOGY
Bratislava, Czechoslovakia

So: East European Accession Vol. 6, no. 2, 1957

APPROVED FOR RELEASE: 06/20/2000 CIA-RDP86-00513R001446210016-6"

"APPROVED FOR RELEASE: 06/20/2000 CIA-RDP86-00513R001446210016-6

RUZA, V.

Effects of certain factors on the moistening and flowing properties of brazed joints. p. 206. ZVARNIE. (Ministerstvo hutneho prumyslu a rudnych bani a Ministerstvo strojarstva) Bratislava. Vol. 5, no. 6, June 1956.

SOURCE: East European Accessions List, (EEAL). Library of Congress. Vol. 5, no. 12, December 1956.

APPROVED FOR RELEASE: 06/20/2000 CIA-RDP86-00513R001446210016-6"

"APPROVED FOR RELEASE: 06/20/2000 CIA-RDP86-00513R001446210016-6

RUZA, V.

RUZA, V. Using the evidence of capillarity when soldering metals. p. 258

Vol. 5, no. 8/9, Sept. 1956
ZVARANIE
TECHNOLOGY
Bratislava, Czechoslovakia

So: East European Accession Vol. 6, no. 2, 1957

APPROVED FOR RELEASE: 06/20/2000 CIA-RDP86-00513R001446210016-6"

"APPROVED FOR RELEASE: 06/20/2000 CIA-RDP86-00513R001446210016-6

RUZA, V.

New Czechoslovak standard for welding nonferrous metals. p.78.
(Zvaranie, Vol. 6, No. 3, Mar. 1957, Bratislava, Czechoslovakia)

SO: Monthly List of East European Accessions (EEAL) LC. Vol. 6, No. 9, Sept. 1957. Uncl.

APPROVED FOR RELEASE: 06/20/2000 CIA-RDP86-00513R001446210016-6"

"APPROVED FOR RELEASE: 06/20/2000 CIA-RDP86-00513R001446210016-6

RUZA, Viliam, inz., SoC.

Manual argon-shielded titanium welding. Zvaranie 12 no. 6: 157-163 Je '63.

1. Vyskumny ustav zvaracsky, Bratislava.

APPROVED FOR RELEASE: 06/20/2000 CIA-RDP86-00513R001446210016-6"

"APPROVED FOR RELEASE: 06/20/2000 CIA-RDP86-00513R001446210016-6

RUZA, Viliam, inz.; LONGAUER, Jozef, dr.

A new standard of brazes for hard soldering of metals. Zvaranie 11 no.8:249-251 Ag '62.

1. Vyskumny ustav zvaracsky, Bratislava.

APPROVED FOR RELEASE: 06/20/2000 CIA-RDP86-00513R001446210016-6"

"APPROVED FOR RELEASE: 06/20/2000 CIA-RDP86-00513R001446210016-6

23170
Z/032/61/011/007/001/003
E073/E535

1.2400

AUTHOR: Ruža, V., Engineer

TITLE: Brazing of Thin Steel Pipes

PERIODICAL: Strojírenství, 1961, Vol.11, No.7, pp. 519-522

TEXT: The author criticises the practice of using gas and arc welding for connecting thin walled steel pipes and other components produced from thin steel sheet. He recommends that brazing should be used instead and describes results of strength tests obtained with brazed joints. The tests were made on tubes with a wall thickness of 1.5 mm made of a steel with a UTS of 36-37 kg/mm^2 [Abstractor's Note: kg/cm^2 in the text is obviously a printing error], using a brass brazing alloy Ms-Ni8 (σ_{Pt} = 40 to 46 kg/mm^2, δ = 20 to 40%). The tests were made on brazed joints of tubes as shown in Fig.3 (a-d). The base material had an average breaking strength σ_{Pt} of about 37 kg/mm^2. The measured mechanical properties of the brazed connections were as follows (σ_{Pt}, kg/mm^2): 37.0 for the brazed joint as shown in Fig.3a, 32.8 (Fig.3b), 35.6 (Fig.3c) and 36.0 (Fig.3d). The tests have

Card 1/3

APPROVED FOR RELEASE: 06/20/2000 CIA-RDP86-00513R001446210016-6"

"APPROVED FOR RELEASE: 06/20/2000 CIA-RDP86-00513R001446210016-6

Brazing of Thin Steel Pipes

23170
Z/032/61/011/007/001/003
E073/E535

shown that both as regards strength and appearance brazing is fully satisfactory and superior to gas and arc welding for manufacturing steel furniture, bicycle frames and various other goods made of tubes and other thin walled sections. There are 6 figures, 1 table and 5 references: 1 Czech and 4 non-Czech.

ASSOCIATION: Výzkumný ústav zváračský, Bratislava (Welding Research Institute, Bratislava)

Card 2/3

APPROVED FOR RELEASE: 06/20/2000 CIA-RDP86-00513R001446210016-6"

"APPROVED FOR RELEASE: 06/20/2000 CIA-RDP86-00513R001446210016-6

23170
Z/032/61/011/007/001/003
E073/E535

Brazing of Thin Steel Pipes

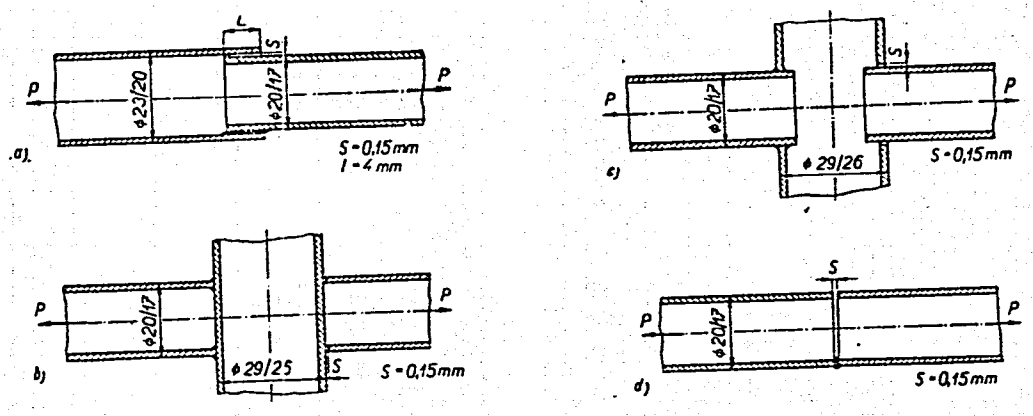

Card 3/3

Fig.3

APPROVED FOR RELEASE: 06/20/2000 CIA-RDP86-00513R001446210016-6"

"APPROVED FOR RELEASE: 06/20/2000 CIA-RDP86-00513R001446210016-6

Ruza, Viliam

3000

13622* (Czech.) Testing Solders. Skúšanie spájok. Viliam Ruza. Zvárania, v. 5, no. 5, May 1956, p. 136-141.

Testing apparatus and procedures for evaluating and comparing the properties of vairous types of hard and soft solders. Performance and evaluation tests for determining ability of solder to fuse with the metals being joined, flowing properties, strength, and working temperature

Metal Trad

VAR

LFH

APPROVED FOR RELEASE: 06/20/2000 CIA-RDP86-00513R001446210016-6"

"APPROVED FOR RELEASE: 06/20/2000 CIA-RDP86-00513R001446210016-6

RUZA, V.

AID Nr. 976-4 24 May

CZECHOSLOVAK DISSERTATIONS IN METALLURGY (CZECHOSLOVAKIA)

Teindl, J. Hutnické Listy, v. 18, no. 3, Mar 1963, 223-224.
Z/034/63/018/003/003/004

The dissertation of J. Maly dealt with the hot cracking of fully austenitic welds. It confirmed the beneficial effect of elements forming low-melting eutectics and of fine grained structure. Tungsten, a strong carbide former, lowers the carbon content of the residual liquid phase, which raises the melting point of this phase and makes it less effective in preventing hot cracking. Weak spots formed by solidified low-melting eutectics can be eliminated by homogenizing annealing. Rare-earth metals do not appear to have any beneficial effect in reducing the weld susceptibility to hot cracking. V. Ruža studied the properties of brazing alloys and brazed joints and the effect of various brazing variables. C. Dočkal's work dealt with the intergranular corrosion of duralumin, primarily with the effect of aging at 150°C. He found that the corrosion behavior of duralumin in an aqueous solution containing 3%

Card 1/2

APPROVED FOR RELEASE: 06/20/2000 CIA-RDP86-00513R001446210016-6"

"APPROVED FOR RELEASE: 06/20/2000 CIA-RDP86-00513R001446210016-6

AID Nr. 976-4 24 May

CZECHOSLOVAK DISSERTATIONS [Cont'd] Z/034/63/018/003/003/004

NaCl and 0.1% HCl depends not only on the degree of decomposition of the solid solution but also on the physicochemical characteristics of the precipitated phase, which in turn are determined by the distribution of the precipitated phase in the solid solution matrix. The precipitated particles are cathodes. Corrosion develops in the grain area adjacent to the grain boundaries. Plastic deformation prior to aging intensifies the precipitation and promotes intergranular corrosion. [DV]

Card 2/2

APPROVED FOR RELEASE: 06/20/2000 CIA-RDP86-00513R001446210016-6"

"APPROVED FOR RELEASE: 06/20/2000 CIA-RDP86-00513R001446210016-6

RUZA, Viliam, inz.

Contribution to the mechanization of induction and gas brazing in mechanical engineering. Zvar sbor 10 no.3:309-323 '61.

1. Vyskumny ustav zvaracsky, Bratislava.

APPROVED FOR RELEASE: 06/20/2000 CIA-RDP86-00513R001446210016-6"

"APPROVED FOR RELEASE: 06/20/2000 CIA-RDP86-00513R001446210016-6

L 24350-65 EWT(m)/EWP(v)/T/EWP(t)/EWP(k)/EWP(b) Pf-4 IJP(c) JD/HM

ACCESSION NR: AP4044905 Z/0031/64/012/009/0631/0633

AUTHOR: Ruza, Viliam (Engineer)

TITLE: Torch brazing and soldering of 99.5% pure titanium and Ti-Al5-Sn2.5 alloy

SOURCE: Strojirenska vyroba, v. 12, no.9, 1964, 631-633

TOPIC TAGS: titanium brazing, titanium alloy brazing, titanium soldering, titanium alloy soldering

ABSTRACT: Unalloyed titanium and titanium-base alloy containing 5% Al and 2.5% Sn can be brazed or soldered with a standard oxyacetylene torch. Brazing alloy or solder in a suitable form must be placed in the joint and covered with flux. The flux layer should be wide enough to cover the whole area which could be oxidized during the brazing. Heating is done from the opposite side. Silver and aluminum and their alloys can be used as brazing alloys. The method can be used also for brazing titanium alloys to other metals. The quality of the joint depends very much on the skill of the operator and gen-

Card 1/2

APPROVED FOR RELEASE: 06/20/2000 CIA-RDP86-00513R001446210016-6"

"APPROVED FOR RELEASE: 06/20/2000 CIA-RDP86-00513R001446210016-6

L 24350-65

ACCESSION NR: AP4044905

erally is inferior to that of joints obtained by furnace brazing in a protective atmosphere or in a vacuum. Brazed joints made with silver in unalloyed titanium had a shear strength of 6—11 kg/mm^2, and those in titanium alloy 1—2 kg/mm higher. Orig. art. has: 2 figures.

ASSOCIATION: Vy'zkumny' u'stav zva'rackyˈ, Bratislava (Welding Research Institute)

SUBMITTED: 00 ENCL: 00 SUB CODE: MM

NO REF SOV: 001 OTHER: 003 ATD PRESS: 3124

Card 2/2

APPROVED FOR RELEASE: 06/20/2000 CIA-RDP86-00513R001446210016-6"

"APPROVED FOR RELEASE: 06/20/2000 CIA-RDP86-00513R001446210016-6

RUZA, Viliam, inz.

Testing the flash weldability of aluminum and copper sheets of 2 to 20 mm thickness. Zvar sbor 11 no.4:474-500 '62.

1. Vyskumny ustav zvaracsky, Bratislava.

APPROVED FOR RELEASE: 06/20/2000 CIA-RDP86-00513R001446210016-6"

"APPROVED FOR RELEASE: 06/20/2000 CIA-RDP86-00513R001446210016-6

L 10896-65 EPF(c)/EPF(n)-2/EWP(v)/EPR/EWP(t)/EWP(k)/EWP(b) Pf-4/Pr-4/
Ps-4/Pu-4 ASD(f)-2/ESD(gs)/ASD(m)-3/AEDC(b) JD/HM

ACCESSION NR: AP4049715 Z/0031/64/012/008/0566/0571

AUTHOR: Ruza, V. (Engineer) B

TITLE: Welding of Ti 99.5 and Ti-Al 5--Sn 2.5 in a protective argon atmosphere 16

SOURCE: Strojirenska vyroba, v. 12, no. 8, 1964, 566-571

TOPIC TAGS: welding, titanium, titanium base alloy, aluminum, tin, welding technique, argon 27 27 27 27

Abstract: Described are results in experiments with welding of titanium and Ti-Al-Sn alloys, conducted in the Research Institute of Welding. The argon medium is used to protect the material against oxidation and nitridation. Experiments proved that under certain conditions it is possible to achieve a quality of an annealed material with a high economic effect. A table is included with technical data on welding conditions. Original article has 4 figures and 2 tables.

Card 1/2

APPROVED FOR RELEASE: 06/20/2000 CIA-RDP86-00513R001446210016-6"

"APPROVED FOR RELEASE: 06/20/2000 CIA-RDP86-00513R001446210016-6

L 10896-65

ACCESSION NR: AP4049715

ASSOCIATION: Vyskumny ustav zvaracsky, Bratislava (Research Institute of Welding)

SUBMITTED: 00 ENCL: 00 SUB CODE: MM

NO REF SOV: 001 OTHER: 004 JPRS

Card 2/2

APPROVED FOR RELEASE: 06/20/2000 CIA-RDP86-00513R001446210016-6"

"APPROVED FOR RELEASE: 06/20/2000 CIA-RDP86-00513R001446210016-6

RUZA, Viliam, inz. CSc.

Weldability of the Ti-Al 5 - Sn 2 5 alloy by the argon-shielded tungsten arc process. Zvaranie 13 no.3:65-71 Mr'64

1. Welding Research Institute, Bratislava.

APPROVED FOR RELEASE: 06/20/2000 CIA-RDP86-00513R001446210016-6"

"APPROVED FOR RELEASE: 06/20/2000 CIA-RDP86-00513R001446210016-6

RUZA, Viliam, inz., C.Sc.

Effect of air on the properties of titanium welds. Zvaranie 12 no.2:28-33 F '63.

1. Vyskumny ustav zvaracsky, Bratislava.

APPROVED FOR RELEASE: 06/20/2000 CIA-RDP86-00513R001446210016-6"

"APPROVED FOR RELEASE: 06/20/2000 CIA-RDP86-00513R001446210016-6

RUZA, Viliam, inž., C.Sc.

Automatic tungsten electrode welding of titanium in an argon flow with additional weld protection. Zvaranie 12 no.3:53-58 Mr '63.

1. Vyskumny ustav zvaracsky, Bratislava.

APPROVED FOR RELEASE: 06/20/2000 CIA-RDP86-00513R001446210016-6"

"APPROVED FOR RELEASE: 06/20/2000 CIA-RDP86-00513R001446210016-6

RUZA, Viliam, inz.

Mechanical properties of brazed joints from titanium and its alloys. Zvaranie 13 no.12:348-353 D '64.

1. Research Institute of Welding, Bratislava.

APPROVED FOR RELEASE: 06/20/2000 CIA-RDP86-00513R001446210016-6"

"APPROVED FOR RELEASE: 06/20/2000 CIA-RDP86-00513R001446210016-6

RUZAKOV, V.

We will achieve new sucess in construction. Sel'.stroi.11 no.5:6 My '56. (MLRA 9:9)

1.Nachal'nik otdela po stroitel'stvu v kolkhozakh Minusinskogo rayona Krasnoyarskogo kraya.
(Construction industry)

APPROVED FOR RELEASE: 06/20/2000 CIA-RDP86-00513R001446210016-6"

"APPROVED FOR RELEASE: 06/20/2000 CIA-RDP86-00513R001446210016-6

RUZAKOV, V.

Tekhnik Minusinskogo rayonnogo otdela sel'skogo i kolkhoznogo stroitel'stva Krasnoyarskogo kraya

Sel' stroi., 1952, no. 4, iyul'-avgust

APPROVED FOR RELEASE: 06/20/2000 CIA-RDP86-00513R001446210016-6"

"APPROVED FOR RELEASE: 06/20/2000 CIA-RDP86-00513R001446210016-6

RUZAKOV, V., CHERNYAKOV, L.

Silos - Siberia

Experience of building half-silos in Siberia. Sel'. stroi. no. 4, 1952.

9. Monthly List of Russian Accessions, Library of Congress, November 1952 ~~1953~~. Unclassified.

APPROVED FOR RELEASE: 06/20/2000 CIA-RDP86-00513R001446210016-6"

"APPROVED FOR RELEASE: 06/20/2000 CIA-RDP86-00513R001446210016-6

RUZAKOV, V., CHERNYAKOV, L.

Siberia - Silos

Experience of building half-silos in Siberia. Sel'.stroi. no. 4, 1952.

Monthly List of Russian Accessions, Library of Congress, November 1952. UNCLASSIFIED.

APPROVED FOR RELEASE: 06/20/2000 CIA-RDP86-00513R001446210016-6"

"APPROVED FOR RELEASE: 06/20/2000 CIA-RDP86-00513R001446210016-6

RUZANKIN, N., inzh.

Operation of the souring kiln at the Odessa ruberoid plant.
Stroi. mat. 4 no.11:28-29 N '58. (MIRA 11:12)
(Bitumen)

APPROVED FOR RELEASE: 06/20/2000 CIA-RDP86-00513R001446210016-6"

"APPROVED FOR RELEASE: 06/20/2000 CIA-RDP86-00513R001446210016-6

1ST AND 2ND ORDERS

PROCESSES AND PROPERTIES INDEX

3RD AND 4TH ORDERS

CA

22

Bitumens from the Ishimbaevo fuel oil. G. P. Grigor'ev and N. S. Ruzankin. *Neftyanoe Khoz.* 1939, No. 3, 53-5. The yield of bitumens in the oxidation of the above fuel oil is 61-72% on the latter, and on the acid sludge from the fuel oil 61-62%. The treating temp. must be in excess of 240°; the oxidation sets in after blowing for 2 hrs., increasing with temp.; it is proportional to the amt. of air fed. The high S content of the above fuel oil catalyzes the asphalt formation. Best results were obtained at about 300° and on using about 51 mm. of air per kg. of fuel oil to be oxidized. These asphalts were suitable for roofing paper. The exptl. are described. A. A. B.

ASB SLA METALLURGICAL LITERATURE CLASSIFICATION

APPROVED FOR RELEASE: 06/20/2000 CIA-RDP86-00513R001446210016-6"

"APPROVED FOR RELEASE: 06/20/2000 CIA-RDP86-00513R001446210016-6

RUZANKIN, Yu., inzh.

Hydraulic removers. Rech. transp. 19 no. 6:47 Je '60. (MIRA 14:2)

(Hydraulic machinery)

APPROVED FOR RELEASE: 06/20/2000 CIA-RDP86-00513R001446210016-6"

"APPROVED FOR RELEASE: 06/20/2000 CIA-RDP86-00513R001446210016-6

L 22147-66

ACC NR: AP6012951 SOURCE CODE: UR/0096/65/000/011/0012/0020

AUTHOR: Rubinshteyn, Ya. M. (Doctor of technical sciences); Sokolov, Ye. Ya. (Doctor of technical sciences); Komarov, N. F. (Engineer); Bunin, V. S. (Engineer); Ruzankov, V. N. (Engineer)

ORG: All-Union Heat Engineering Institute (Vsesoyuznyy teplotekhnicheskiy institut)

TITLE: Thermic characteristics of heating turbine model T-100-130-TMZ

SOURCE: Teploenergetika, no. 11, 1965, 12-20

TOPIC TAGS: thermoelectric power plant, power generating station

ABSTRACT: The first model of the T-100-130 heating and power turbine was put in operation at heat and electric power station TETs-20 at Moscow in 1963. The turbine is designed to supply nominal loads of 100 Mw electric power and 186 Mw (160 Gcal/hr) heat energy. The turbine has a number of new features: a two-stage heating system for water supply; an increased range of pressure of heating steam, from 0.6 to 2.5 at. in the upper, from 0.5 to 2.0 at. in the lower takeoff point; heat outlets for heating water in the turbine condensors. The turbine can operate in one condensation and three heating regimes, depending on the time of year. Graphs presented in this article show the thermic characteristics produced in tests with the unit operating in all four regimes. The tests showed the unit to be reliable and efficient, more efficient than the factory guarantee by about 5%. The turbine is capable of turning out 109

Card 1/2 UDC: 621.165.6.001.5

APPROVED FOR RELEASE: 06/20/2000 CIA-RDP86-00513R001446210016-6"

"APPROVED FOR RELEASE: 06/20/2000 CIA-RDP86-00513R001446210016-6

L 22147-66
ACC NR: AP6012951 0

Mw in the condensation and 120 Mw in the heating regimes, although the generators being used with it are capable of only 100 Mw. Detailed recommendations for improving the operational characteristics of the equipment and increasing reliability are published in Elektricheskiye Stantsii, no. 1, 1965 (article by Komarov, Pechenkin, Bunin, and Ruzankov). Orig. art. has: 10 figures and 2 tables. [JPRS]

SUB CODE: 10 / SUBM DATE: none / ORIG REF: 003

Card 2/2 dda

APPROVED FOR RELEASE: 06/20/2000 CIA-RDP86-00513R001446210016-6"

"APPROVED FOR RELEASE: 06/20/2000 CIA-RDP86-00513R001446210016-6

RUBINSHTEYN, Ya.M., doktor tekhn. nauk; SOKOLOV, Ye.Ya., doktor tekhn. nauk; KOMAROV, N.F., inzh.; BUNIN, V.S., inzh.; RUZANKOV, V.N., inzh.

Thermal characteristics of the T-100-130 central heating turbine. Teploenergetika 12 no.11:12-20 N '65. (MIRA 18:10)

1. Vsesoyuznyy teplotekhnicheskiy institut.

APPROVED FOR RELEASE: 06/20/2000 CIA-RDP86-00513R001446210016-6"