"APPROVED FOR RELEASE: 06/20/2000 CIA-RDP86-00513R001446410003-8

RYBAS, I.I.; TISHCHENKO, Ye.I. [Tishchenko, K.I.]

Methods of isolating pathogenic fungi from animals. Mikrobiol.zhur. 26 no.4:92-94 '64. (MIRA 18:10)

1. Chernovitskiy meditsinskiy institut.

APPROVED FOR RELEASE: 06/20/2000 CIA-RDP86-00513R001446410003-8"

"APPROVED FOR RELEASE: 06/20/2000 CIA-RDP86-00513R001446410003-8

ZAKRIVIDOROGA, S.P.; RYBAS, I.I.

Action of antibiotics in combination with cholinomimetic substances. Vrach.delo no.12:87-90 D '62. (MIRA 15:12)

1. Kafedra farmakologii (zav. - prof. S.P.Zakrividoroga) i mikrobiologii (zav. - dotsent I.I.Rybas) Chernovitskogo meditsinskogo instituta.
(ANTIBIOTICS)(CHOLINE)

APPROVED FOR RELEASE: 06/20/2000 CIA-RDP86-00513R001446410003-8"

"APPROVED FOR RELEASE: 06/20/2000 CIA-RDP86-00513R001446410003-8

RYBASENKO, I D

129-10-4/12

AUTHOR: Rybasenko, I.D., Candidate of Technical Sciences.

TITLE: Influence of carbon on the fatigue limit of case-hardened steel. (Vliyaniye ugleroda na predel ustalosti tsementuyemoy stali.)

PERIODICAL: "Metallovedeniye i Obrabotka Metallov" (Metallurgy and Metal Treatment) 1957, No.10, pp.19-21 (U.S.S.R.)

ABSTRACT: Information published by I.S. Kozlovskiy and Yu.M. Orzhekhovskiy (2), (3), relating to the influence of the carbon content of the non-saturated core on the fatigue limit is contradictory to results obtained by A. Almer and A. Boegehold (1). In this paper, the influence was studied of the carbon content on the strength of surface-hardened steel subjected to alternating loads. The chemical composition of the investigated steels was as follows:

Steel	C	Si	Mn	S	P	Cr	Ni
I	0.22	0.36	0.44	0.030	0.040	1.03	0.25
II	0.44	0.34	0.50	0.035	0.040	1.02	0.23.

It was found that the fatigue limit of the surface-carburised steels with a carbon content in the diffusion layer of up to 1.1% increased with increasing carbon content in the non-saturated core of the component. Increase in the carbon content of the layer above 1.1% leads to a sharp decrease in

Card 1/2

APPROVED FOR RELEASE: 06/20/2000 CIA-RDP86-00513R001446410003-8"

"APPROVED FOR RELEASE: 06/20/2000 CIA-RDP86-00513R001446410003-8

AVERBUKH, M.L.; RYBAS, I.I.; TROYAN, G.A.; SHIL'MAN, R.M.

Diagnosis of schizophrenia by means of the complement fixation reaction. Lab.delo 6 no.3:6-10 My-Je '60. (MIRA 13:7)

1. Kafedra psikhatrii (zav. - prof. G.Yu. Malis) i kafedra mikrobiologii (zav. - dotsent I.I. Rybas) Chernovitskogo meditsinskogo instituta (dir. - dotsent M.M. Kovalev) i Chernovitskoy psikhonevrologicheskoy bol'nitsy (glavnyy vrach N.F. Chubinets).

(SCHIZOPHRENIA) (COMPLEMENT FIXATION)

APPROVED FOR RELEASE: 06/20/2000 CIA-RDP86-00513R001446410003-8"

"APPROVED FOR RELEASE: 06/20/2000 CIA-RDP86-00513R001446410003-8

RYBAS, I. I.

"The Phasic Development and Variability of Microorganisms, Report IV," I. I. Rybas, "Preliminary Data on Obtaining Variants in the Early Phases of Development of Gaertner Bacteria", Zhur Mikrobiol Epidemiol i Immunobiol, No. 12, pp 8-10, 1950.

APPROVED FOR RELEASE: 06/20/2000 CIA-RDP86-00513R001446410003-8"

"APPROVED FOR RELEASE: 06/20/2000 CIA-RDP86-00513R001446410003-8

BOYARCHENKO, Ivan Fomich; RYBAS, T., red.; IL'IN, A., tekhn.red.

[To the far reaches of the universe] V glubiny vselennoi. Lugansk, Luganskoe obl.izd-vo, 1960. 118 p. (MIRA 13:12)

(Cosmology) (Artificial satellites)

APPROVED FOR RELEASE: 06/20/2000 CIA-RDP86-00513R001446410003-8"

"APPROVED FOR RELEASE: 06/20/2000 CIA-RDP86-00513R001446410003-8

MALYSHEV, I.F.; RYBAS, K.P.

Time of existence of a virtual cathode. Elektrofiz. app. no.2:179-188 '64. (MIRA 18:3)

APPROVED FOR RELEASE: 06/20/2000 CIA-RDP86-00513R001446410003-8"

"APPROVED FOR RELEASE: 06/20/2000 CIA-RDP86-00513R001446410003-8

L 63537-65 EPF(n)-2/EPA(s)-2/EWA(h)/EWT(m)/EWP(b)/EWP(t) Pt-5/Pu-1/Peb IJP(c)

ACCESSION NR: AP5017828 WW/JD/JG UR/0286/65/000/011/0058/0058

621.521

35

B

AUTHOR: Malyshev, I. F.; Rybas, K. P.; Ivanov, B. A.; Yefimov, V. K.

TITLE: Device for evaporation of titanium. Class 27, No. 171500

SOURCE: Byulleten' izobreteniy i tovarnykh znakov, no. 11, 1965, 58

TOPIC TAGS: evaporation device, titanium evaporation

ABSTRACT: This Author Certificate introduces a device for evaporation of titanium by means of electron-beam heating in sorption-ionic pumps. The device contains an incandescent tungsten cathode and titanium condenser. To assure complete and uniform evaporation and to prevent overheating, the condenser from the side cathode is equipped with a refractory tantalum substrate. Orig. art. has: 1 figure. [AZ]

ASSOCIATION: Predpriyatiye gosudarstvennogo komiteta po ispol'zovaniyu atomnoy energii SSSR (State Committee on Atomic Energy Utilization, SSSR)

SUBMITTED: 10Jun63 ENCL: 00 SUB CODE: MM, NP

NO REF SOV: 000 OTHER: 000 ATD PRESS: 4049

metal vapors

Card 1/1

APPROVED FOR RELEASE: 06/20/2000 CIA-RDP86-00513R001446410003-8"

"APPROVED FOR RELEASE: 06/20/2000 CIA-RDP86-00513R001446410003-8

RYBAS, V.

Flour and groats mills need gas chambers. Muk.-elev.prom. 20 no.11:27 N '54. (MLRA 8:3)

1. Kalininskaya taroremontnaya masterskaya Zagotzerno. (Flour mills) (Bagging)

APPROVED FOR RELEASE: 06/20/2000 CIA-RDP86-00513R001446410003-8"

"APPROVED FOR RELEASE: 06/20/2000 CIA-RDP86-00513R001446410003-8

RYBASENKO, I.D.

USSR

Strength of Cast Iron in Different Sections of a Casting. I. D. Rybasenko and M. N. Vitkovskii. (*Liteinoi Proizvodstvo*, [illegible] [in Russian]. In the investigation described the differences produced in the mechanical properties of iron castings through differences in cooling rate were studied. Specimens of four irons covering a wide range of composition (C 2·50–3·34%, Si 1·45–2·27%, Mn 0·45–0·70, Cr < 0·43%, Ni 0·28–0·42%, S 0·08–0·14%, P 0·15–0·24%) were cast in dried vertical moulds into bars 10–50 mm. in dia. and 340 mm. long. From extrapolation of the results of the mechanical tests a diagram is constructed for finding, from compression tests on standard test pieces, the type and strength of iron required for various wall thicknesses.—S. K.

APPROVED FOR RELEASE: 06/20/2000 CIA-RDP86-00513R001446410003-8"

"APPROVED FOR RELEASE: 06/20/2000 CIA-RDP86-00513R001446410003-8

RYBASENKO, I.D.

RYBASENKO, I.D., kand.tekhn.nauk.

Effect of carbon on the fatigue limit of steel undergoing cementation. Metalloved.i obr.met. no.10:19-21 O '57. (MIRA 10:11)

1. Kramatorskiy vecherniy filial Donetskogo industrial'nogo instituta imeni N.S.Khrushcheva.
(Cementation (Metallurgy)) (Steel--Fatigue)

APPROVED FOR RELEASE: 06/20/2000 CIA-RDP86-00513R001446410003-8"

"APPROVED FOR RELEASE: 06/20/2000 CIA-RDP86-00513R001446410003-8

RYBASENKO, I.D., inzh.; VASIL'YEV, F.G., inzh.

Unit for testing the alloys at the end contacts in the electroforming of steel articles. Mashinostroenie no.6:68-69 N-D '64 (MIRA 18:2)

APPROVED FOR RELEASE: 06/20/2000 CIA-RDP86-00513R001446410003-8"

"APPROVED FOR RELEASE: 06/20/2000 CIA-RDP86-00513R001446410003-8

RYBASENKO, I.D.; YAKUBOVSKIY, L.A.; KAGAN, I.Z.; NEVSKIY, B.N., inzhener, redaktor; MEDOVAR, B.I., kandidat tekhnicheskikh nauk, retsensent; BORT, M.M., inzhener, retsenzent; PRITSKER, G.S., tekhredaktor.

[Technology of making chemical apparatus of stainless steel] Tekhnologiia izgotovleniia khimicheskoi apparatury iz nerzhaveiushchei stali. Kiev, Gos.nauchno-tekhn.izd-vo mashinostroit. lit-ry, 1951, 145 p. [Microfilm] (MIRA 10:5)

(Chemical apparatus) (Steel, Stainless)

APPROVED FOR RELEASE: 06/20/2000 CIA-RDP86-00513R001446410003-8"

"APPROVED FOR RELEASE: 06/20/2000 CIA-RDP86-00513R001446410003-8

RYBASENKO, I. D.

USSR/Miscellaneous - Foundry processes

Card 1/1 : Pub. 61 - 19/23

Authors : Rybasenko, I. D., and Vitkovskiy, M. N.

Title : Strength of cast-iron in various sections of the casting

Periodical : Lit. proizv. 4, 29-30, July 1954

Abstract : Method of testing the yield strength of cast-iron in various parts of the casting is briefly described. The chemical composition of the samples, on which yield strength experiments were carried out, is shown in table. Graphs.

Institution : ...

Submitted : ...

APPROVED FOR RELEASE: 06/20/2000 CIA-RDP86-00513R001446410003-8"

"APPROVED FOR RELEASE: 06/20/2000 CIA-RDP86-00513R001446410003-8

16(7) SOV/148-59-2-12/24

AUTHOR: Rybasenko, I.D., Candidate of Technical Sciences

TITLE: The Problem of Efficient Evaluation of Carburized Steel Strength (K voprosu o ratsional'noy otsenke prochnosti tsementirovannoy stali)

PERIODICAL: Izvestiya vysshikh uchebnykh zavedeniy, Chernaya metallurgiya, 1959, Nr 2, pp 101-106 (USSR)

ABSTRACT: Information is given on results of experiments carried out for the purpose of determining the effect of different methods of loading on changes in carburized steel strength. Specimens of five steel grades were subjected to mechanical tests, including static and dynamic bend, static tension, compression and rotary bend. It was stated that the strength of the carburized steel depended on the hardness of the carburized layer and of the core. In static bending and tensile tests the strength of the specimen increased with stronger hardness of the non-saturated core up to a critical point ($380H_B$). In static tension, bending and uniaxial compression, maximum strength was observed in the case of optimum carbon content in the carburized layer. In dynamic bend and triaxial non-

Card 1/2

APPROVED FOR RELEASE: 06/20/2000 CIA-RDP86-00513R001446410003-8"

"APPROVED FOR RELEASE: 06/20/2000 CIA-RDP86-00513R001446410003-8

SOV/148-59-2-12/24

The problem of Efficient Evaluation of Carburized Steel Strength

uniform compression, an effect of carbon concentration in the layer was not observed. The author presents graphs showing the dependence of the loading on the hardness of the non-saturated core.
There are 3 tables, 5 graphs and 8 Soviet references

ASSOCIATION: Donetskiy industrial'nyy institut (Donets Industrial Institute) Kafedra metallovedeniya i termoobrabotki (Chair of Metallography and Thermal Treatment)

SUBMITTED: October 2, 1958

Card 2/2

APPROVED FOR RELEASE: 06/20/2000 CIA-RDP86-00513R001446410003-8"

"APPROVED FOR RELEASE: 06/20/2000 CIA-RDP86-00513R001446410003-8

RYBASENKO, I.D.; VITKOVSKIY, M.N.

Strength of iron cast in different thicknesses. Lit.proizv. no.4:29-30 Jl '54. (MLRA 7:7)
(Cast iron)

APPROVED FOR RELEASE: 06/20/2000 CIA-RDP86-00513R001446410003-8"

"APPROVED FOR RELEASE: 06/20/2000 CIA-RDP86-00513R001446410003-8

RYBASENKO, I.D., kand.tekhn.nauk

Testing case-hardened steel. Konstr.i tekh.mash. no.1:243-254 '61. (MIRA 15:2)
(Steel--Testing)

APPROVED FOR RELEASE: 06/20/2000 CIA-RDP86-00513R001446410003-8"

"APPROVED FOR RELEASE: 06/20/2000 CIA-RDP86-00513R001446410003-8

1. KASHCHENKO, K.A.-Eng. RYBASENKO, I.D. -Eng.

2. USSR (600)

3. Machinery

4. Inferior book ("Chemical and thermic processing of machine parts"). D.S.Kazarnovskiy, I.S.Svet. Reviewed by Eng. K.A.Kashchenko, Eng.I.D.Rybasenko. Vest. Mash. 32 No. 7 - 1952.

9. Monthly List of Russian Acessions, Library of Congress, February, 1953. Unclassified.

APPROVED FOR RELEASE: 06/20/2000 CIA-RDP86-00513R001446410003-8"

"APPROVED FOR RELEASE: 06/20/2000 CIA-RDP86-00513R001446410003-8

Rybashov, M.V.

PHASE I BOOK EXPLOITATION SOV/4403

Akademiya nauk SSSR. Institut avtomatiki i telemekhaniki

Avtomaticheskoye upravleniye; [sbornik rabot] (Automatic Control; Collected Works) [Moscow] Izd-vo AN SSSR [1960] 431 p. Errata slip inserted. 5,500 copies printed.

Ed.: Ya.Z. Tsypkin, Doctor of Technical Sciences, Professor; Ed. of Publishing House: Ye.N. Grigor'yev; Tech. Ed.: G.A. Astaf'yeva.

PURPOSE: This collection of reports is intended for scientists and engineers engaged in the study of automation.

COVERAGE: The collection contains reports presented at the 6th Conference of Young Scientists of the Institut avtomatiki i telemekhaniki AN SSSR (Institute of Automation and Telemechanics of the Academy of Sciences USSR) in January 1959. The collection covers a wide range of scientific and technical problems connected with automatic control. No personalities are mentioned. References accompany each report.

Shubin, A.B. Controller-Unit Circuits in Multichannel Automatic Optimizers 129
The author reviews and analyzes various circuits of the controller unit of a multichannel optimizer and discusses the methods of the search for an extremum. There are 3 references, all Soviet.

PART II. AUTOMATIC CHECKING

Grabovetskiy, V.P. Checking of Specific Electric Resistance and Geometrical Dimensions of Nonmagnetic Metallic Products by Means of Eddy Currents 135
The author studies a long, prismatic, nonmagnetic, conductive sample by placing it in a high-frequency magnetic field of a coil. The induced eddy currents create their own magnetic flux, opposite to the flux of the coil. This results in changes of coil resistance and reactance. The author obtains mathematical formulas and draws curves connecting the values of the introduced resistances with the parameters of the investigated sample. He also uses this method for the detection of defects in nonmagnetic metals. There are 4 references: 2 Soviet, 1 English, and 1 German.

Lakunina, L.V. Some Application of Hall-Effect Components 145
The author gives a detailed mathematical analysis of the parameters, characteristics, and operating conditions of components built of materials possessing considerable galvanomagnetic and Hall effects. She also includes some suggestions as to the design of such components to be used in automation and telemechanic equipment. There are 4 references, all Soviet.

Nauman, A.A. Application of Reverse Scattered β-Radiation for the Automatic Checking of the Composition of Complex Media 152
The author discusses certain aspects of the application of reverse scattered β-radiation for continuous, contactless, automatic checking of the composition of complex media containing three or more components. There are 10 references: 5 Soviet, 4 English, and 1 French.

Panasenko, I.M., M.V. Rybashov, and I.A. Tsaturova. Automatic Potentiometer With Dynamic Correction of Primary Transducers 160
The authors aim at developing a corrected automatic potentiometer for eliminating the time lag of thermocouples (with time constants up to 15 minutes) for use in chemical and heat-producing installations. They conclude that the method which they applied for correcting primary transducers may be also used for a large class of d-c input data sources which are described by first and second order linear equations with constant coefficients. There are 5 references: 3 Soviets, and 2 English.

APPROVED FOR RELEASE: 06/20/2000 CIA-RDP86-00513R001446410003-8"

"APPROVED FOR RELEASE: 06/20/2000 CIA-RDP86-00513R001446410003-8

27971
S/194/61/000/004/002/052
D249/D302

9,6000 (1013,1040)

AUTHORS: Panasenko, I.M., Rybashov, M.V. and Tsaturova, I.A.

TITLE: Automatic potentiometer with dynamic correction of primary transducers

PERIODICAL: Referativnyy zhurnal. Avtomatika i radioelektronika, no. 4, 1961, 20, abstract 4 A139 (V sb. Avtomat. upravleniye, M., AN SSSR, 1960, 160-168)

TEXT: The problem of reducing the time-lag in instrumentation transducers is considered. The reduction of the time-lag at the expense of transducer's construction is normally not permissible. The inclusion of series, passive, correcting devices leads to a decrease in the signal strength and a requirement for additional amplification. It is relatively simple, however, to correct for a long time constant of a transducer by means of a measuring instrument with modified dynamic characteristics. Such characteristics can be produced by inserting in the feedback circuit of an electron-

Card 1/2

Card 2/2

APPROVED FOR RELEASE: 06/20/2000 CIA-RDP86-00513R001446410003-8"

"APPROVED FOR RELEASE: 06/20/2000 CIA-RDP86-00513R001446410003-8

RYBASHOV, M.V., PANASENKO, I.M., LERNER, A.YE

"On the response-time of automatic potentiometers and the dynamic correction of primary transducers."

Report presented at the 2nd Intl. Conf of Instruments and Measurements, IMEKO, Budapest, 25 June - 1 July 1961.

APPROVED FOR RELEASE: 06/20/2000 CIA-RDP86-00513R001446410003-8"

"APPROVED FOR RELEASE: 06/20/2000 CIA-RDP86-00513R001446410003-8

88816

S/103/61/022/001/008/012
B019/B056

9.7200

AUTHOR: Rybashov, M. V. (Moscow)

TITLE: The Solution of Algebraic and Transcendental Equations on a Simulator by Means of the Gradient Method

PERIODICAL: Avtomatika i telemekhanika, 1961, Vol. 22, No. 1, pp. 77-88

TEXT: In the present paper, it is shown that it is of advantage for the solution of a system of finite equations with simulators to set up an initial differential equation by using the gradient method. This method permits the ansatz for setting up a differential equation and, in most cases, warrants the convergence to a steady point, viz., the solution of the system. For setting up the system of differential equations from a system of algebraic or transcendental equations by means of the gradient method, the author uses a theorem by A. M. Lyapunov on the asymptotic stability in equilibrium. It is necessary that the steady point be asymptotically stable, and it is shown here that, owing to the favorable effect of small perturbation forces, the gradient method in most cases warrants the asymptotic stability of the steady point. If the system of the

Card 1/3

APPROVED FOR RELEASE: 06/20/2000 CIA-RDP86-00513R001446410003-8"

"APPROVED FOR RELEASE: 06/20/2000 CIA-RDP86-00513R001446410003-8

88516

The Solution of Algebraic and Transcendental Equations on a Simulator by Means of the Gradient Method

S/103/61/022/001/008/012
B019/B056

algebraic or transcendental equation is given with $f_i(x_1,\ldots,x_n) = 0$ $(i = 1,\ldots,n)$ (5), the equilibrium point $(\alpha_1,\ldots,\alpha_n)$ of the system

$$dy_i/dt = f_i(\alpha_1 + y_1, \ldots, \alpha_n + y_n) \qquad (7)$$

is, according to the theorem by Lyapunov, asymptotically stable in the case of sufficiently small y_i $(i = 1,\ldots,n)$, if there is a positive-definite function $V = V(y_1,\ldots,y_n)$, whose derivative with respect to t from (7) is negative-definite. A sufficient representation for the asymptotic stability of equilibrium in the selection of V in the form of $V = \frac{1}{2}\sum_k^n f_k^2$ and perturbations that do not exceed the range of the attractive force, is given by the condition

$$\mathrm{Det}\begin{pmatrix} \partial f_1/\partial x_1 & \ldots\ldots & \partial f_1/\partial x_n \\ \ldots & \ldots\ldots & \ldots \\ \partial f_n/\partial x_n & \ldots\ldots & \partial f_n/\partial x_n \end{pmatrix} \neq 0 \qquad (6).$$

Card 2/3

APPROVED FOR RELEASE: 06/20/2000 CIA-RDP86-00513R001446410003-8"

"APPROVED FOR RELEASE: 06/20/2000 CIA-RDP86-00513R001446410003-8

88826

The Solution of Algebraic and Transcendental Equations on a Simulator by Means of the Gradient Method

S/103/61/022/001/008/012
B019/B056

Among the asymptotically stable steady points of the differential system of equations there may also be points that are not roots of the system of finite equations. In the present paper, it is shown that if the left part of a given finite equation is an analytic function, the system of equation has no asymptotically stable wrong steady points. As is seen from the study of the effect of the linearity of the computing elements of the simulator, the manner of operation in which only the functional converter is nonlinear, is not dangerous, whereas that in which the integrators are nonlinear, is dangerous. There are 6 figures and 4 Soviet references.

SUBMITTED: June 2, 1960

Card 3/3

APPROVED FOR RELEASE: 06/20/2000 CIA-RDP86-00513R001446410003-8"

"APPROVED FOR RELEASE: 06/20/2000 CIA-RDP86-00513R001446410003-8

S/194/62/000/004/017/105
D222/D309

AUTHORS: Shumilovskiy, N. N. and Rybashov, M. V.

TITLE: The use of computer elements in automatic measuring devices

PERIODICAL: Referativnyy zhurnal, Avtomatika i radioelektronika, no. 4, 1962, abstract 4-2-18g (Nauchn. zap. L'vovsk. politekhn. in-t, 1961, no. 79, 143-159)

TEXT: By analyzing the structural diagram of a number of automatic instruments using computer devices, methods and possibilities of constructing automatic systems without the use of accurate and bulky multiplier and divider devices, are indicated. The structural schemes of the following measurements are examined: Volume outflow of a gas, outflow of steam, temperature in a gas flow, temperature in a gas flow at high speeds. An automatic control system, described by equations with separated variables, is presented. It is shown that the accuracy of the computational operations depends on the degree of influence from various independent quantities on the final

Card 1/2

APPROVED FOR RELEASE: 06/20/2000 CIA-RDP86-00513R001446410003-8"

"APPROVED FOR RELEASE: 06/20/2000 CIA-RDP86-00513R001446410003-8

result of all mathematical operations. The accuracy of the computer elements in automatic systems must correspond to the accuracy of the measuring instruments (approx. 0.5 - 1%), with the condition that the influence of independent quantities on the result of the calculation is comparable to the influence of the basic (most characteristic) independent variable. If inessential independent quantities exist and their influence on the result of the calculation is about 10 - 12%, it is recommended that computer elements of reduced accuracy (approx. 5 - 10%) should be used to account for these quantities. 9 figures. /Abstracter's note: Complete translation./

APPROVED FOR RELEASE: 06/20/2000 CIA-RDP86-00513R001446410003-8"

"APPROVED FOR RELEASE: 06/20/2000 CIA-RDP86-00513R001446410003-8

RYBASHOV, M.V. (Moskva)

Determination of the roots of finite equation systems by means of an electronic computer using differential equations with a variable structure. Avtom. i telem. 22 no.12:1638-1648 D '61. (MIRA 14:12)

(Electronic calculating machines) (Differential equations)

APPROVED FOR RELEASE: 06/20/2000 CIA-RDP86-00513R001446410003-8"

"APPROVED FOR RELEASE: 06/20/2000 CIA-RDP86-00513R001446410003-8

55

RYBASHOV, M. V.

PHASE I BOOK EXPLOITATION SOV/6012

Akademiya nauk SSSR. Institut avtomatiki i telemekhaniki.

Avtomaticheskoye regulirovaniye i upravleniye (Automatic Regulation and Control) Moscow, Izd-vo AN SSSR, 1962. 526 p. Errata slip inserted. 9000 copies printed.

Resp. Ed.: Ya. Z. Tsypkin, Professor, Doctor of Technical Sciences; Ed. of Publishing House: Ye. N. Grigor'yev; Tech. Ed.: I. N. Dorokhina.

PURPOSE: This book is intended for scientific research workers and engineers concerned with automation.

COVERAGE: The book is a collection of articles consisting of papers delivered at the 7th Conference of Junior Scientists of the Institute of Automation and Telemechanics, Academy of Sciences USSR, held in March 1960. A wide range of scientific and technical questions relating to automatic regulation and control is covered.

Card 1/12

APPROVED FOR RELEASE: 06/20/2000 CIA-RDP86-00513R001446410003-8"

"APPROVED FOR RELEASE: 06/20/2000 CIA-RDP86-00513R001446410003-8

The articles are organized in seven sections, including automatic control systems, automatic process control, computing and decision-making devices, automation components and devices, statistical methods in automation, theory of relay circuits and finite automatic systems, and automated electric drives. No personalities are mentioned. References are given at the end of each article.

TABLE OF CONTENTS:

PART I. AUTOMATIC CONTROL SYSTEMS

Andreychikov, B. I. The effect of dry friction and slippage [play] on error during reverse gear operation of servo-feed systems 3

Andreychikov, B. I. Dynamic accuracy of machine tools with programmed control 14

APPROVED FOR RELEASE: 06/20/2000 CIA-RDP86-00513R001446410003-8"

"APPROVED FOR RELEASE: 06/20/2000 CIA-RDP86-00513R001446410003-8

PART III. COMPUTING AND DECISION-MAKING DEVICES

Butkovskiy, A. G. Modelling some objects with distributed parameters 242

Brik, V. A. Digital computer for compiling a program for machining parts on a milling machine 248

Gul'ko, F. B. High speed electronic multipliers 265

Novosel'tseva, Zh. A. Modelling controlled delay 274

Rybashov, M. V. One type of functional generator with several inputs 281

Rybashov, M. V. Solution of one type of linear algebraic equations by means of electronic models [analogs] 291

APPROVED FOR RELEASE: 06/20/2000 CIA-RDP86-00513R001446410003-8"

"APPROVED FOR RELEASE: 06/20/2000 CIA-RDP86-00513R001446410003-8

RYBASHOV, M.V. (Moskva)

Use of an electronic model in a certain method for finding the roots of finite equations. Izv. AN SSSR. Otd. tekh. nauk. Energ. i avtom. no.5:151-156 S-O '62. (MIRA 15:11)
(Electronic calculating machines)
(Differential equations)

APPROVED FOR RELEASE: 06/20/2000 CIA-RDP86-00513R001446410003-8"

"APPROVED FOR RELEASE: 06/20/2000 CIA-RDP86-00513R001446410003-8

RYBASHOV, M.V.

Dynamic correction of simple transducers. Izm.tekh. no.12:23-27 D '62. (MIRA 15:12)
(Transducers)

APPROVED FOR RELEASE: 06/20/2000 CIA-RDP86-00513R001446410003-8"

"APPROVED FOR RELEASE: 06/20/2000 CIA-RDP86-00513R001446410003-8

43262

S/108/62/017/012/002/010
D413/D308

6.9500

AUTHOR: Rybashov, M.V.

TITLE: On the time-quantization of a signal of finite area

PERIODICAL: Radiotekhnika, v. 17, no. 12, 1962, 13-15

TEXT: The author considers the problem of quantizing in time a signal limited in area and spectrum in such a way that the absolute difference between successive amplitudes never exceeds a given value, and derives the following lower bound for the quantization frequency:

$$F \geqslant \frac{1}{\Delta_{max}} \cdot \frac{\sigma\sqrt{\sigma}}{\sqrt{3\pi}} \|\dot{x}\|. \qquad (4)$$

where F is the quantization frequency, Δ_{max} the maximum permissible amplitude step, σ the cut-off frequency and $\|x\|$ the

Card 1/2

APPROVED FOR RELEASE: 06/20/2000 CIA-RDP86-00513R001446410003-8"

"APPROVED FOR RELEASE: 06/20/2000 CIA-RDP86-00513R001446410003-8

norm of the signal. This is illustrated by an example, and is also extended to cover the case where the signal passes through a linear filter before quantization. There are 2 figures.

SUBMITTED: August 4, 1961 (initially)
June 22, 1962 (after revision)

APPROVED FOR RELEASE: 06/20/2000 CIA-RDP86-00513R001446410003-8"

"APPROVED FOR RELEASE: 06/20/2000 CIA-RDP86-00513R001446410003-8

35327
S/103/62/023/002/015/015
D230/D301

16.6800 (1250,1327,1329,1344)

AUTHOR: ~~Rybashov, M.V.~~ (Moscow)

TITLE: Some methods for solving linear algebraic equation systems using electronic computers

PERIODICAL: Avtomatika i telemekhanika, v. 23, no. 2, 1962, 248 - 255

TEXT: Four methods of solution are presented: 1) The method based on choice of signs in the right-hand part of differential equations is not general since it does not yield stability of solution. It can be used in certain cases in conditions limiting the coefficients of an algebraic system. Otherwise, this method can only be used for a relatively small number of equations. One of the advantages of this system is the small number of computing elements involved. 2) The method based on the multiplication of matrices - A^T; adequate solution stability is obtained for an arbitrary matrix A, however, due to need to multiply matrices it is laborious. The basic advantages of this method are its general applicability and a small number of computing elements involved. It is suitable for sol-

Card 1/2

APPROVED FOR RELEASE: 06/20/2000 CIA-RDP86-00513R001446410003-8"

"APPROVED FOR RELEASE: 06/20/2000 CIA-RDP86-00513R001446410003-8

GRADETSKIY, V.G.; PUSTYL'NIKOV, V.M.; RYBASHOV, M.V.

Eighth Scientific and Technical Conference of the Young Scientists of the Institute of Automatic and Remote Control. Avtom.i telem. 23 no.4:546-549 Ap '62. (MIRA 15:4)
(Automatic control--Congresses) (Remote control--Congresses)

APPROVED FOR RELEASE: 06/20/2000 CIA-RDP86-00513R001446410003-8"

"APPROVED FOR RELEASE: 06/20/2000 CIA-RDP86-00513R001446410003-8

41527

S/103/62/023/010/008/008
D201/D308

9,7200

AUTHOR: Rybashov, M. V. (Moscow)

TITLE: A method of electronic analog solution of the general problem of determining roots of polynomial equations

PERIODICAL: Avtomatika i telemekhanika, v. 23, no. 10, 1962, 1396-1398

TEXT: Let the system of equations

$$f_i(x_1,\ldots,x_n) = 0 \quad (i = 1,\ldots,n) \qquad (1)$$

have k isolated roots $\vec{x}_i = (x_1^{(i)},\ldots, x_n^{(i)})$ in a certain finite domain D. Let the original function be continuously differentiable in this space. The first n-1 equations of system (1) represent in the n-dimensional Euclidean space a certain uni-dimensional set M_1, or, in a particular case, a curve Γ. The remaining nth equation

Card 1/2

APPROVED FOR RELEASE: 06/20/2000 CIA-RDP86-00513R001446410003-8"

"APPROVED FOR RELEASE: 06/20/2000 CIA-RDP86-00513R001446410003-8

represents a (n-1)-dimensional hypersurface M_2. The roots of system (1) will be points at which the curve Γ intersects the hypersurface M_2. If Γ is closed, assuming that $\Gamma \subset D$, choosing a point $\vec{x}^0$ on Γ and letting it move in one direction one can find all points of intersection. If Γ is not closed, one must return to the initial point after having reached the boundary of D, and move in the opposite direction. The motion along Γ can be obtained by simulating an auxiliary system of differential equations. An example is given. In this way one can find extremum points of $y = f(x_1, \ldots, x_n)$, also with additional restraints. The method is applicable when the form of Γ can be determined, e.g. when the first (n-1) equations are nearly linear. There are 2 figures.

SUBMITTED: June 26, 1962

APPROVED FOR RELEASE: 06/20/2000 CIA-RDP86-00513R001446410003-8"

"APPROVED FOR RELEASE: 06/20/2000 CIA-RDP86-00513R001446410003-8

L 17771-63 EWT(d)/FCC(w)/BDS AFFTC/ASD/APGC/IJP(C)

ACCESSION NR: AT3001888 S/2906/62/000/000/0245/0249

55

AUTHOR: Ry*bashov, M. V.

TITLE: Method for the simultaneous determination of all the roots of an algebraic polynomial 16

SOURCE: Kombinirovannyye vychislitel'nyye mashiny; trudy II Vsesoyuznoy konferentsii-seminara po teorii i metodam matematicheskogo modelirovaniya. Moscow, Izd-vo AN SSSR, 1962, 245-249

TOPIC TAGS: computer, polynomial, algebraic, root, simultaneous, multiple, roots, determination, minimization, complex, analog

ABSTRACT: This theoretical paper explains the limitation of existing analog computers (AC), optimizers, and universal digital machines (DC) in the finding of complex roots of algebraic polynomials with real coefficients, in which the solution of the problem extends only to the stage of the organization of the regions of attraction about the roots in the plane XOY, with convergence to one of the roots of the polynomial; the author outlines a method for the simultaneous finding of all such roots. The author cites the example of the minimization of a function, V(x, y), the absolute minimums of which coincide with the roots of the polynomial f(x+iy). Upon mini-

Card 1/2

APPROVED FOR RELEASE: 06/20/2000 CIA-RDP86-00513R001446410003-8"

"APPROVED FOR RELEASE: 06/20/2000 CIA-RDP86-00513R001446410003-8

L 17771-63

ACCESSION NR: AT3001888

mization of the function V(x, y) by means of a suitable method, the entire plane XOY divides into separate regions of attraction, each of which contains a root or several multiple roots of the polynomial. Here the problem of the search for the roots of the polynomial reduces to the problem of the successive location of the initial conditions (x^0, y^0) in all regions of attraction. Frequently such a transformation completes the problem, since in numerous cases, especially with a polynomial of low order, all regions of attraction can be readily searched. An alternative method is provided for the search for the roots in a certain fixed region. An expansion of the initially selected region will then lead to the finding of all other roots. A method is adduced for the determination of the multiplicity of a root. It is noted that in the general case the accuracy of the calculation of the coordinates of a root deteriorates in a multiple root and that the accuracy of such determination depends substantially on the direction of approach to the minimum. Upon identification of a multiple root it is advisable to repeat the solution several times, selecting each time different initial conditions in the vicinity of the minimum. Orig. art. has 8 numbered equas.

ASSOCIATION: none

SUBMITTED:	00	DATE ACQ:	11Apr63	ENCL:	00
SUB CODE:	CP, MM	NO REF SOV:	004	OTHER:	000

Card 2/2

APPROVED FOR RELEASE: 06/20/2000 CIA-RDP86-00513R001446410003-8"

"APPROVED FOR RELEASE: 06/20/2000 CIA-RDP86-00513R001446410003-8

S/044/62/000/011/050/064
A060/A000

16.6800

AUTHOR: Rybashov, M.V.

TITLE: Solving a type of linear algebraic equations on electronic simulators

PERIODICAL: Referativnyy zhurnal, Matematika, no. 11, 1962, 37, abstract 11V161 (In collection "Avtomat. regulirovaniye i upr. , Moscow, AN SSSR, 1962, 291 - 296)

TEXT: As the approximate solution of a system of linear algebraic equations

$$\sum_{k}^{n} a_{ik} x_k + b_i = 0 \quad (i = 1, \ldots, n)$$

it is possible to take the solution of the corresponding system of differential equations

$$\frac{dx_i}{dt} = \sum_{k}^{n} g_{ik} x_k + c_i \quad (i = 1, \ldots, n) \qquad (1)$$

in the steady state (i.e., the solution of system (1) with arbitrary initial conditions after the lapse of the transient process). In solving the system (1) us-

Card 1/2

APPROVED FOR RELEASE: 06/20/2000 CIA-RDP86-00513R001446410003-8"

"APPROVED FOR RELEASE: 06/20/2000 CIA-RDP86-00513R001446410003-8

ing electronic simulators, owing to the inertia of the latter, there unavoidably arises the so-called dynamic error. The author analyzes the problem of constructing a system of differential equations such that in it this dynamic error decreases with time or, with appropriate initial conditions is equal to zero.

V.K. Saul'yev

[Abstracter's note: Complete translation]

APPROVED FOR RELEASE: 06/20/2000 CIA-RDP86-00513R001446410003-8"

"APPROVED FOR RELEASE: 06/20/2000 CIA-RDP86-00513R001446410003-8

S/020/62/147/006/007/034
B104/B180

16.8000
16.6500

AUTHOR: Rybashov, M. V.

TITLE: The synthesis of a class of computer

PERIODICAL: Akademiya nauk SSSR. Doklady, v. 147, no. 6, 1962, 1304-1305

TEXT: A method is described for the synthesis of computers for extracting the square roots $\vec{x}^*(t) = (x_1^*, x_2^*, \ldots, x_n^*)$ of a system $f_i(x_1, \ldots, x_n, u_1, \ldots, u_r)$ (1) of finite equations with zero error under steady state conditions. $u_1, \ldots, u_r$ are time-dependent, limited, and differentiable parameters; the f_i are continuously differentiable and the system of their functions has a regular Jacobi matrix $A = \left\{\partial f_i/\partial x_k\right\}$. The system $df_i/dt = \Phi_i(f_1, \ldots, f_n)$ (2) is studied, where Φ_i and the f_i satisfy Lipschitz conditions and are so chosen that (2) has an asymptotically stable stationary point $\vec{f} = 0$ $(f_1 = \ldots = f_n = 0)$

Card 1/3

APPROVED FOR RELEASE: 06/20/2000 CIA-RDP86-00513R001446410003-8"

"APPROVED FOR RELEASE: 06/20/2000 CIA-RDP86-00513R001446410003-8

in the phase space F. System (2) leads implicitly to a system $dy/dt = \bar{A}^{-1}(\Phi - Bdu/dt)$ (4) in the variables $y_1, \ldots, y_n$, where dy/dt, du/dt, and Φ are the column matrices of the derivatives and of the Φ_i functions. Any $\vec{x}_k^*(t)$ solution of system (1) is a particular solution of system (4). With initial conditions $\vec{y}(t_0) = \vec{x}_k(t_0)$, satisfying system (1), one solution $\vec{y}(t, \vec{y}(t_0))$ of system (4) satisfies system (1) for all $t > t_0$. It is shown that the phase trajectory $\vec{y}(t) = \vec{x}_k(t)$ is asymptotically stable. The dynamic error diminishes with time so that the steady-state error is zero by the end of the transient response. Equation (4) can be represented by analog computer technique.

ASSOCIATION: Institut avtomatiki i telemekhaniki Gosudarstvennogo Komiteta Soveta Ministrov SSSR po avtomatizatsii i mashinostroyeniyu i Akademii nauk SSSR (Institute of Automation and Telemechanics of the State Committee of the Council of Ministers USSR for Automation and Machine-Building and of the Academy of Sciences USSR)

APPROVED FOR RELEASE: 06/20/2000 CIA-RDP86-00513R001446410003-8"

"APPROVED FOR RELEASE: 06/20/2000 CIA-RDP86-00513R001446410003-8

S/103/63/024/001/006/012
D201/D308

6.9200

AUTHOR: Rybashov, M. V. (Moscow)

TITLE: Determination of the required frequency of periodic measurements of a continuous signal

PERIODICAL: Avtomatika i telemekhanika, v. 24, no. 1, 1963, 75-81

TEXT: Two methods are considered. The first results directly from the problem and is independent of indirect signal characteristics. It is based on the determination of a maximizing function of the variable changes and can be applied when this function depends only loosely on the duration of sampling. The second method is that of majorant functions, which makes it possible to determine the sampling frequency and to satisfy strictly the conditions of quantization. If both functions coincide, the method of majorants gives the necessary and sufficient conditions for the choice of sampling frequency. There are 6 figures.

SUBMITTED: May 8, 1962

Card 1/1

APPROVED FOR RELEASE: 06/20/2000 CIA-RDP86-00513R001446410003-8"

"APPROVED FOR RELEASE: 06/20/2000 CIA-RDP86-00513R001446410003-8

S/103/63/024/003/007/015
D405/D301

AUTHORS: Karpinskaya, N.N. and Rybashov, M.V. (Moscow)

TITLE: On a method of solution in linear-programming by means of an analog computer

PERIODICAL: Avtomatika i telemekhanika, v. 24, no. 3, 1963, 361-368

TEXT: The problem of linear programming is solved by a method involving the systematic inspection of the vertices of the polyhedron of solutions. The polyhedron is formed by the set of hypersurfaces

$$P_j = \sum_{k=1}^{n} a_{jk}x_k + b_j = 0. \qquad (3)$$

Normally, linear programming involves solving several systems of linear algebraic equations, their number being equal to C^n_{m+n}. Therefore the well-known method of solution (by analog computers) is only expedient if the number of original inequalities is small. However, in various practical problems and also in the case of systematic in-

Card 1/2

Card 2/2

APPROVED FOR RELEASE: 06/20/2000 CIA-RDP86-00513R001446410003-8"

"APPROVED FOR RELEASE: 06/20/2000 CIA-RDP86-00513R001446410003-8

S/103/63/024/003/014/015
D405/D301

AUTHORS: Raykin, A.L. and Rybashov, M.V.

TITLE: Ninth scientific-technical conference of young scientists of the Institute of Automation and Remote Control (IAT)

PERIODICAL: Avtomatika i telemekhanika, v. 24, no. 3, 1963, 425-428

TEXT: The regular annual conference of young scientists of the IAT was held from 16-18 April, 1962. The conference surveyed the work done (or completed) in 1961. The participants were scientific workers from research institutes, design and planning bodies, schools of higher learning, and industrial plants from Moscow and Moscow region. The conference was opened by the director of the IAT Academican V.A. Trapeznikov. At the plenary session Doctor of Technical Sciences A.A. Fel'dbaum reported on 'Automatic optimization and self-learning systems'. In all, 44 reports and papers were presented at the following sections: 1) Automatic regulation. 2) Auto-

Card 1/2

APPROVED FOR RELEASE: 06/20/2000 CIA-RDP86-00513R001446410003-8"

"APPROVED FOR RELEASE: 06/20/2000 CIA-RDP86-00513R001446410003-8

S/103/63/024/003/014/015
D405/D301

Ninth scientific-technical ...

matic control. 3) Elements and apparatus of automation and remote control. 4) Computing devices. 5) Theory of relay systems and finite automata. 6) Remote control. The reports dealt (among others) with the following subjects: High-speed sampled data systems with switching during a sampling period. Parametric programming (related to control of cement manufacture). Optimal control using passive networks. Optimal control in iron-ore caking. Correlation analysis of catalytic cracking. Extremal control under non-Gaussian random signals with storing of information about plant. Periodic regimes in sampled-data extremal systems. Linearization devices. Semiconductor triggers. Digital indicator units. Control of mass discharges of flows. New methods of measuring electrolyte concentration. Electro-pneumatic converters with millivolt input. Switching-diode circuits. The use of conducting polymers in preparing control elements and devices. Pulse filter circuits for simulation. Various digital devices. Minimization of Boolean functions. Machine algorithm of synthesis of transition tables. Noise stability of a decoder for a two-frequency code. Estimate of optimal number of functional elements of a code-frequency remote control system.

Card 2/2

APPROVED FOR RELEASE: 06/20/2000 CIA-RDP86-00513R001446410003-8"

"APPROVED FOR RELEASE: 06/20/2000 CIA-RDP86-00513R001446410003-8

ACCESSION NR: AP4044828 S/0280/64/000/004/0091/0103

AUTHOR: Ry*bashov, M.V.(Moscow); Dudnikov, Ye. Ye.(Moscow)

TITLE: A solution of the problem of minimizing development costs by simulation

SOURCE: AN SSSR. Izvestiya. Tekhnicheskaya kibernetika, no. 4, 1964, 91-103

TOPIC TAGS: development cost, cost minimization, simulation, electronic simulation, analog computer, PERT-COST method, linear simulation

ABSTRACT: Possible application on the PERT-COST method using electronic simulation is considered, a curve is found for the dependence of the cost of an optimum project of its duration, and the parameters for the net of an optimum project are determined. Block diagrams and oscilloscope traces for a simple problem are first shown, and then the method is extended to the case where cost and duration of an operation are described by quadratic, convex functions. The total cost of the project is then also convex and Pyne's method may be used without requiring an increase in equipment as compared with the linear case. It is necessary to reduce the overall practical problem, involving many operations, for piecewise solution, the problem being broken down into subproblems of lower dimensionality. The project can also be divided into subprojects, each then

1/2

Card

APPROVED FOR RELEASE: 06/20/2000 CIA-RDP86-00513R001446410003-8"

"APPROVED FOR RELEASE: 06/20/2000 CIA-RDP86-00513R001446410003-8

RYBASHOV, M.V.

Some problems in the dynamic correction of nonlinear transducers. Izm.tekh. no.6:31-34 Je '65. (MIRA 18:8)

APPROVED FOR RELEASE: 06/20/2000 CIA-RDP86-00513R001446410003-8"

"APPROVED FOR RELEASE: 06/20/2000 CIA-RDP86-00513R001446410003-8

L 32136-65 EWT(d) IJP(c)

ACCESSION NR: AP5002688 S/0280/64/000/006/0117/0122

AUTHOR: Rybashov, M. V. (Moscow); Dudnikov, Ye. Ye. (Moscow)

8
B
16

TITLE: Using the direct method of Lyapunov for solving nonlinear-programing problems

SOURCE: AN SSSR. Izvestiya. Tekhnicheskaya kibernetika, no. 6, 1964, 117-122

TOPIC TAGS: direct Lyapunov method, second Lyapunov method, nonlinear problem programing

ABSTRACT: A method is suggested for solving a set of nonlinear inequalities of this form: $\varphi_j(z) \leqslant 0$, $j = 1, 2, \ldots, m$, $z = (z_1, \ldots, z_n)$, which has a single permissible solution: $z^* = (z_1^*, \ldots, z_n^*)$. By using the direct (second) method of Lyapunov, a special gradient set of differential equations is written; the set possesses these properties: (a) the coordinates of its stationary point coincide

Card 1/2

APPROVED FOR RELEASE: 06/20/2000 CIA-RDP86-00513R001446410003-8"

"APPROVED FOR RELEASE: 06/20/2000 CIA-RDP86-00513R001446410003-8

L 32136-65
ACCESSION NR: AP5002688

with the coordinates of the vector of solution of the inequalities set and (b) this stationary point is asymptotically stable in the large. Theorems are formulated which prove convergence of the solution. The proofs do not require consideration of the convexity conditions of the initial functions; thus, a wide class of sets bounded only by the applicability of the second Lyapunov method can be handled. Direct and reciprocal linear- and nonlinear-programing problems and finite matrix games can be reduced to the above simultaneous set of nonlinear inequalities. Orig. art. has: 42 formulas.

ASSOCIATION: none

SUBMITTED: 19Mar64 ENCL: 00 SUB CODE: DP, MA

NO REF SOV: 004 OTHER: 002

Card 2/2

APPROVED FOR RELEASE: 06/20/2000 CIA-RDP86-00513R001446410003-8"

"APPROVED FOR RELEASE: 06/20/2000 CIA-RDP86-00513R001446410003-8

L 3195-66 EWT(d)/T IJP(c)

ACCESSION NR: AP5012756 UR/0020/65/161/006/1289/1290 33 30 B

AUTHOR: Rybashov, M. V.; Dudnikov, Ye. Ye. 44,55
(Academician) 44,55

TITLE: Parametric method of solving the problems of fractional programming on analog computers 16,44,55

SOURCE: AN SSSR. Doklady, v. 161, no. 6, 1965, 1289-1290

TOPIC TAGS: fractional programming, analog computer

ABSTRACT: This problem of nonlinear programming is considered: $\lambda^* = \min \{P(x), x \in R\}$ with a fractional target function: $P(x) = F_1(x) / F_2(x)$ and a nonempty permissible restricted and closed set R defined by these constraints:

$$\varphi_s(x) \leqslant 0, \qquad s = 1, \ldots, m,$$
$$\psi_j(x) = \sum_{k=1}^{n} a_{jk} x_k + b_j = 0, \quad j = 1, \ldots, q; \; q < n,$$
$$\alpha_i \leqslant x_i \leqslant \beta_i, \qquad i = 1, \ldots, n,$$

Card 1/2

APPROVED FOR RELEASE: 06/20/2000 CIA-RDP86-00513R001446410003-8"

"APPROVED FOR RELEASE: 06/20/2000 CIA-RDP86-00513R001446410003-8

L 3195-66

ACCESSION NR: AP5012756

3

where $x \in E_n$; $F_1(x)$, $\varphi_s(x)$ are convex functions; a_{jk}, b_j, α_i, β_i are real numbers. The above problem includes the A. Charnes and W. W. Cooper problem of fractional-linear programming (Nav. Res. Logist. Quart., v. 9, nos. 3-4, 181, 1962) plus additional constraints. Orig. art. has: 12 formulas.

ASSOCIATION: Institut avtomatiki i telemekhaniki AN SSSR (Institute of Automation and Telemechanics, AN SSSR) 44,55

SUBMITTED: 11Nov64 ENCL: 00 SUB CODE: DP

NO REF SOV: 002 OTHER: 002

Card 2/2

APPROVED FOR RELEASE: 06/20/2000 CIA-RDP86-00513R001446410003-8"

"APPROVED FOR RELEASE: 06/20/2000 CIA-RDP86-00513R001446410003-8

L 14068-66 EWT(d)/T/EWP(1) IJP(c)

ACC NR: AP6002397 SOURCE CODE: UR/0103/65/026/012/2151/2162

AUTHOR: Rybashov, M. V. (Moscow)

ORG: None

TITLE: The gradient method of solving problems in linear and quadratic programming on an analog computer

SOURCE: Avtomatika i telemekhanika, v. 26, no. 12, 1965, 2151-2162

TOPIC TAGS: analog computer, computer programming, linear programming

ABSTRACT: The author investigates gradient systems of differential equations by means of which problems of linear and quadratic programming may be solved by electronic analog computers. The gradient method proposed elsewhere (Rybashev, M. V., Gradiyentnyy metod resheniya zadach vypuklogo programmirovaniya na elektronnoy modeli. Avtomatika i telemekhanika, v. 26, no. 11, 1965) is used. Different versions of setting up these systems are presented. A method is proposed for solving on an electronic analog computer the subsidiary problem of quadratic programming, i.e., the determination of the non-negative fature of quadratic forms. Orig. art. has: 8 figures and 11 formulas.

SUB CODE: 09 / SUBM DATE: 19Mar65 / ORIG REF: 010 / OTH REF: 007

Card 1/1 UDC: 62-501.72:519.82

APPROVED FOR RELEASE: 06/20/2000 CIA-RDP86-00513R001446410003-8"

"APPROVED FOR RELEASE: 06/20/2000 CIA-RDP86-00513R001446410003-8

L 9002-66 EWT(d)/T/EWP(1) IJP(c)

ACC NR: AP5027889 SOURCE CODE: UR/0103/65/026/011/1955/1967

45

AUTHOR: Rybashov, M.V. (Moscow)

ORG: none

B

16,44,55

TITLE: The gradient method for solving convex programming problems on electronic analog computers

SOURCE: Avtomatika i telemekhanika, v. 26, no. 11, 1965, 1955-1967

TOPIC TAGS: computer programming, analog computer, approximation method, differential equation system, approximation convergence

ABSTRACT: The article mainly investigates theoretical problems pertaining to the method of an approximate solution to the general problem of convex programming. The conditional extremum problem is reduced to finding the absolute minimum of the auxiliary convex function. The set of points of the minimum of this function depends on a certain parameter α and subtends to the optimal solution of the problem of the conditional extremum for $\alpha \to +\infty$. In order to determine the minimum in the case of a fixed parameter α a differential equation system is constructed with solutions converging, independent

Card 1/2 UDC: 62-501.72:519.82

APPROVED FOR RELEASE: 06/20/2000 CIA-RDP86-00513R001446410003-8"

"APPROVED FOR RELEASE: 06/20/2000 CIA-RDP86-00513R001446410003-8

L 9002-66

ACC NR: AP5027889

of the initial conditions, to the points of the absolute minimum. The ideas of the direct Lyapunov method are used to prove the convergence. Orig. art. has: 23 formulas.

SUB CODE: MA, DP / SUB DATE: 19 Mar65 / ORIG REF: 011 / OTH REF: 005

Card 2/2

APPROVED FOR RELEASE: 06/20/2000 CIA-RDP86-00513R001446410003-8"

"APPROVED FOR RELEASE: 06/20/2000 CIA-RDP86-00513R001446410003-8

YAROVOY, L.V.; RYBASOV, N.A.; SHAFERSHTEYN, D.L.

Clinicoepidemiological characteristics of sheep and goat brucellosis in factory workers engaged in the primary processing of wool. Sov. med. 27 no.10:52-58 O '63. (MIRA 17:6)

1. Iz kafedry infektsionnykh bolezney (zav.-dotsent L.V. Yarovoy) Stavropol'skogo meditsinskogo instituta i Stavropol'skogo kraevogo otdela zdravookhraneniya.

APPROVED FOR RELEASE: 06/20/2000 CIA-RDP86-00513R001446410003-8"

"APPROVED FOR RELEASE: 06/20/2000 CIA-RDP86-00513R001446410003-8

VYSHIVKINA, Aleksandra Sergeyevna; RYBASOV, V.A., red.;
BEL'CHIKOVA, Yu.S., tekhn. red.

[Mutual assistance of the population in the use of chemical weapons (poisonous substances)] Vzaimopomoshch' naseleniia pri primenenii khimicheskogo oruzhiia (otravliaiushchikh veshchestv). Moskva, Medgiz, 1963. 71 p. (MIRA 16:12)
(CHEMICAL WARFARE) (CIVIL DEFENSE)

APPROVED FOR RELEASE: 06/20/2000 CIA-RDP86-00513R001446410003-8"

"APPROVED FOR RELEASE: 06/20/2000 CIA-RDP86-00513R001446410003-8

KOVALENKO, Valentina Yakovlevna; RYBASOV, Vsevolod Aleksandrovich; BURNAZYAN, A.I., red.; ANDREYENKO, Z.D., red.; POPOVA, S.M., tekhn. red.

[Giving medical aid to victims of nuclear weapons; problems of organization] Okazanie meditsinskoi pomoshchi postradavshim iadernogo oruzhiia; voprosy organizatsii. Pod red. A.I. Burnaziana. Moskva, Atomizdat, 1964. 106 p.

(MIRA 17:2)

APPROVED FOR RELEASE: 06/20/2000 CIA-RDP86-00513R001446410003-8"

"APPROVED FOR RELEASE: 06/20/2000 CIA-RDP86-00513R001446410003-8

RYBASOV, Vsevolod Aleksandrovich; SHMATIKOV, Mikhail Dmitriyevich; LAGUTINA, Ye.V., red.; NAZAROVA, A.S., tekhn. red.

[Personal hygiene]Lichnaia gigiena. Moskva, Izd-vo "Znanie," 1962. 38 p. (Narodnyi universitet kul'tury: Fakul'tet zdorov'ia, no.9) (MIRA 15:11)

(HYGIENE)

APPROVED FOR RELEASE: 06/20/2000 CIA-RDP86-00513R001446410003-8"

"APPROVED FOR RELEASE: 06/20/2000 CIA-RDP86-00513R001446410003-8

RYBASOV V. A.

PA 44/49T108

USSR/Science Mar 49
Scientific Ideology

"Russian Women in Science," V. A. Rybasov, 3 pp

"Nauka i Zhizn'" No 3

Describes advantages shared by Soviet women in science. Very general, but contains some valuable biographical reference material.

FDB 44/49T108

APPROVED FOR RELEASE: 06/20/2000 CIA-RDP86-00513R001446410003-8"

"APPROVED FOR RELEASE: 06/20/2000 CIA-RDP86-00513R001446410003-8

RYBASOV, V. A.

"The First Russian 'Angels of Mercy' for the Care of the Wounded and Patients in Military Hospitals," Med. Sestra., No. 1, 1949.

APPROVED FOR RELEASE: 06/20/2000 CIA-RDP86-00513R001446410003-8"

"APPROVED FOR RELEASE: 06/20/2000 CIA-RDP86-00513R001446410003-8

RYBASOV, V. A.

"The First Preparatory School for Medical Assistant in Russia," Fel'dsher i Akusher, No. 11, 1948.

APPROVED FOR RELEASE: 06/20/2000 CIA-RDP86-00513R001446410003-8"

"APPROVED FOR RELEASE: 06/20/2000 CIA-RDP86-00513R001446410003-8

RYBASOV, V. A.

"Red Nurses in the Civil War," Med. Sestra., No. 3, 1949.

APPROVED FOR RELEASE: 06/20/2000 CIA-RDP86-00513R001446410003-8"

"APPROVED FOR RELEASE: 06/20/2000 CIA-RDP86-00513R001446410003-8

ACCESSION NR AM4022183 BOOK EXPLOITATION S/

Kovalenko, Valentina YAkovlevna; Ry*basov, Vsevolod Aleksandrovich

Rendering medical aid to nuclear weapon victims; problems of organization (Okazaniye meditsinskoy pomoshchi postradavshim ot yadernogo oruzhiya; voprosy* organizatsii), Moscow, Atomizdat, 1964, 106 p. illus., biblio. 92,300 copies printed.

TOPIC TAGS: civil defense, biology, medicine, first aid, nuclear radiation

TABLE OF CONTENTS:

Foreword -- 3
Ch. I. Damaging factors of nuclear weapons and types of damage to the population -- 7
Ch. II. Problems and basic principles of organization of medical aid to the population -- 23
Ch. III. Self help and mutual aid -- 31
Ch. IV. First aid -- 36
Ch. V. Preliminary aid from a doctor -- 48
Ch. VI. Specialized medical aid -- 60
Ch. VII. Sanitary and anti-epidemic measures -- 79

Card 1/2

APPROVED FOR RELEASE: 06/20/2000 CIA-RDP86-00513R001446410003-8"

"APPROVED FOR RELEASE: 06/20/2000 CIA-RDP86-00513R001446410003-8

SAFONOV, A.G., red.; RYBASOV, V.A., red.; KRAKOVSKIY, N.I., red.; PETROVA, N.K., tekhn. red.

[Textbook for the training of nurses] Uchebnik dlia podgotovki meditsinskikh sester. Moskva, Medgiz, 1962. 715 p. (MIRA 15:6)

(NURSES AND NURSING—HANDBOOKS, MANUALS, ETC.)

APPROVED FOR RELEASE: 06/20/2000 CIA-RDP86-00513R001446410003-8"

"APPROVED FOR RELEASE: 06/20/2000 CIA-RDP86-00513R001446410003-8

RYBATSKIY, V. (Kustanay, KazSSR)

Steppe fire. Pozh.delo 4 no.8:13 Ag '58. (MIRA 11:9)
(Kazakhstan--Steppes)

APPROVED FOR RELEASE: 06/20/2000 CIA-RDP86-00513R001446410003-8"

"APPROVED FOR RELEASE: 06/20/2000 CIA-RDP86-00513R001446410003-8

ACCESSION NR: AP4044827 S/0280/64/000/004/0081/0090

AUTHOR: Gal'perin, M.V.(Moscow); Korotkevich, G. I.(Moscow); Minsker, I. N. (Moscow); Ry*basov, V. I. (Moscow)

TITLE: Solving nonlinear mathematical programming problems having one or more extrema on analog computers

SOURCE: AN SSSR. Izvestiya. Tekhnicheskaya kibernetika, no. 4, 1964, 81-90

TOPIC TAGS: computer programming, analog computer, nonlinear programming, mathematical programming, Pyne gradient method

ABSTRACT: The authors discuss Pyne's gradient method for analog computer solution of linear and convex programming problems from the standpoints of accuracy, speed and controllability. A monotonous convex function is considered, using a piecewise linear approximation, and an expression is derived for the time to solve a one-extremum programming problem using Pyne's method; the errors in the solution are also investigated. Using broad-band transistor amplifiers with a 100 ns time constant and 8-blocks having a 50 ns risetime, a linear or quadratic problem can be solved in less than 10 μsec. Methods are next considered for reducing multiple-extremum problems to a finite set of one-extremum problems suitable for determinate solution (in contrast to the Monte Carlo approach). The block-diagram for solving the mutiple extremum problem

Card 1/2

APPROVED FOR RELEASE: 06/20/2000 CIA-RDP86-00513R001446410003-8"

"APPROVED FOR RELEASE: 06/20/2000 CIA-RDP86-00513R001446410003-8

ACCESSION NR: AP4044827

is then discussed in detail. Limitations of the method are determined basically by the static accuracy of the function generator, the performance of diode nonlinearity units and the speed of the analog unit, which can solve, on the average, 5×10^4 one-extremum problems per second, typical times being 1-2 hours for an accuracy of 2% and 5 minutes for 3-4%. Thus, the method is useful for finding the type of rough global minimum which is adequate for many control problems. Orig. art. has: 3 figures and 42 formulas.

ASSOCIATION: none

SUBMITTED: 27Nov63

NO REF SOV: 004

ENCL: 00

OTHER: 003

SUB CODE: DP

Card 2/2

APPROVED FOR RELEASE: 06/20/2000 CIA-RDP86-00513R001446410003-8"

"APPROVED FOR RELEASE: 06/20/2000 CIA-RDP86-00513R001446410003-8

PASECHNIK, I.I.; RYBASOV, V.I.

Application of the symbolic method to studies of stresses and roof shifts in chamber mining systems with ribbon pillars. Trudy Sekt. mat. i mekh. AN Kazakh. SSR 7:169-179 '63. (MIRA 16:10)

APPROVED FOR RELEASE: 06/20/2000 CIA-RDP86-00513R001446410003-8"

"APPROVED FOR RELEASE: 06/20/2000 CIA-RDP86-00513R001446410003-8

RYBASOV, V.I.

Effect of the unloading of pillars in chamber-and-pillar mining and its quantitative evaluation. Vest. AN Kazakh.SSR 19 no.10:91-94 O '63. (MIRA 17:1)

APPROVED FOR RELEASE: 06/20/2000 CIA-RDP86-00513R001446410003-8"

"APPROVED FOR RELEASE: 06/20/2000 CIA-RDP86-00513R001446410003-8

REZNIKOVSKIY, P.T. (Moskva); RYBASOV, V.I. (Moskva); CHAYANOV, V.A., (Moskva)

Formulation and solution of a problem on nonlinear mathematical programming. Izv. AN SSSR. Tekh. kib. no.5:121-132 S-O '63. (MIRA 16:12)

APPROVED FOR RELEASE: 06/20/2000 CIA-RDP86-00513R001446410003-8"

"APPROVED FOR RELEASE: 06/20/2000 CIA-RDP86-00513R001446410003-8

RYBASOV, V.; KRUGLYY, A.; MORDVINOVA, R.

The hospital is protected.... Voen. znan. 41 no.3:28-29 Mr '65.
(MIRA 18:5)

APPROVED FOR RELEASE: 06/20/2000 CIA-RDP86-00513R001446410003-8"

"APPROVED FOR RELEASE: 06/20/2000 CIA-RDP86-00513R001446410003-8

GAL'FERIN, M.V. (Moskva); KOROTKEVICH, G.I. (Moskva); MINSKER, I.N. (Moskva); RYBASOV, V.I. (Moskva)

Solution of problems in nonlinear mathematical programming with one and multiple extremes using analog computers. Izv. AN SSSR. Tekh. kib. no.4:81-90 Jl-Ag '64. (MIRA 17:12)

APPROVED FOR RELEASE: 06/20/2000 CIA-RDP86-00513R001446410003-8"

"APPROVED FOR RELEASE: 06/20/2000 CIA-RDP86-00513R001446410003-8

RYBASOV, V.I., inzh.

Redistribution of loads to interchamber and block pillars in the mining of deposits on several levels. Izv. vys. ucheb. zav.; gor. zhur. 6 no.9:3-14 '63. (MIRA 17:1)

1. Moskovskiy institut radioelektroniki i gornoy elektromekhaniki. Rekomendovana kafedroy vysshey matematiki.

APPROVED FOR RELEASE: 06/20/2000 CIA-RDP86-00513R001446410003-8"

"APPROVED FOR RELEASE: 06/20/2000 CIA-RDP86-00513R001446410003-8

PASECHNIK, I.I., starshiy prepodavatel'; RYBASOV, V.I., inzh.

Relationship between the shape of a lateral cross section of a gallery and the state of stress and deformation in the massif. Izv. vys. uch. zav.; gor. zhur. 5 no.6:22-27 '62. (MIRA 15:9)

1. Moskovskiy gornyy institut. Rekomendovana kafedroy vysshey matematiki.

(Rock pressure)

APPROVED FOR RELEASE: 06/20/2000 CIA-RDP86-00513R001446410003-8"

"APPROVED FOR RELEASE: 06/20/2000 CIA-RDP86-00513R001446410003-8

KHATUNTSEVA, N.V.; RYBASOVA, G.V.

Immunoelectrophoretic analysis of typhoid and paratyphoid A- and B-antigens. Zhur.mikrobiol., epid. i immun. 42 no.12:117-121 D '65. (MIRA 19:1)

1. Institut epidemiologii i mikrobiologii imeni Gamalei AMN SSSR.

APPROVED FOR RELEASE: 06/20/2000 CIA-RDP86-00513R001446410003-8"

"APPROVED FOR RELEASE: 06/20/2000 CIA-RDP86-00513R001446410003-8

7(1)

AUTHORS: Bidulya, V. I., Rybatskiy, V. V. SOV/32-25-2-58/78

TITLE: An Acoustic Layer of Water Glass for the Ultrasonic Materiology of Products With Unfinished Surfaces (Akusticheskaya prosloyka iz zhidkogo stekla dlya ul'trazvukovoy defektoskopii izdeliy s neobrabotannoy poverkhnost'yu)

PERIODICAL: Zavodskaya Laboratoriya, 1959, Vol 25, Nr 2, p 236 (USSR)

ABSTRACT: Metal samples with unfinished surfaces can be examined by means of ultrasonic materiology by applying to the rough surface of the sample a layer of a material whose acoustic rigidity is similar to that of the metal. Experiments showed that a water glass layer serves the purpose best (Fig). In the examination of forgings with artificial and natural flaws constant impulses were obtained. A comparison with transformer oil as a contact medium in examinations of steel standard samples also confirmed the advantages of water glass as a contact medium. Thus, when water glass is used wrong impulses never occur, or if so, only with much higher amplifications

Card 1/2

APPROVED FOR RELEASE: 06/20/2000 CIA-RDP86-00513R001446410003-8"

"APPROVED FOR RELEASE: 06/20/2000 CIA-RDP86-00513R001446410003-8

An Acoustic Layer of Water Glass for the Ultrasonic Materiology of Products With Unfinished Surfaces SOV/32-25-2-58/78

and capacities than with use of transformer oil. There is 1 figure.

ASSOCIATION: Dnepropetrovskiy zavod metallurgicheskogo oborudovaniya (Dnepropetrovsk Plant for Metallurgical Equipment)

Card 2/2

APPROVED FOR RELEASE: 06/20/2000 CIA-RDP86-00513R001446410003-8"

"APPROVED FOR RELEASE: 06/20/2000 CIA-RDP86-00513R001446410003-8

RYBATSKIY, V.V.; STREL'NIKOVA, N.I.

Die stamping large diameter stainles steel bottoms. Kuz. shtam. proizv. 2 no.12:36-38 D '60. (MIRA 14:3)
(Sheet-metal work)
(Steel, Stainless)

APPROVED FOR RELEASE: 06/20/2000 CIA-RDP86-00513R001446410003-8"

"APPROVED FOR RELEASE: 06/20/2000 CIA-RDP86-00513R001446410003-8

BIDULYA, V.I.; RYBATSKIY, V.V.

Acoustic interlayer of liquid glass for ultrasonic defectoscopy of manufactured objects with an unfinished surface. Zav.lab.25 no.2:236 '59. (MIRA 12:3)

1. Dnepropetrovskiy zavod metallurgicheskogo oborudovaniya.
(Ultrasonic testing)

APPROVED FOR RELEASE: 06/20/2000 CIA-RDP86-00513R001446410003-8"

"APPROVED FOR RELEASE: 06/20/2000 CIA-RDP86-00513R001446410003-8

S/182/60/000/012/009/010
A161/A030

AUTHORS: Rybatskiy, V.V., Strel'nikova, N.I.

TITLE; Stamping Large-Diameter Bottoms From Stainless Steel

PERIODICAL: Kuznechno-shtampovochnoye proizvodstvo, 1960, No. 12, pp. 36-38

TEXT: The Dnepropetrovskiy zavod metallurgicheskogo oborudovaniya (Dnepropetrovsk Metallurgical Equipment Plant) has started stamping vessel bottoms 3024 mm in diameter and 12 mm thickness from stainless 1Х18Н9Т (1Kh18N9T) steel. The special 2,500-ton press has insufficient space between columns to stamp whole bottoms, therefore, they are stamped in halves and welded, as is practiced at Dneprodzerzhinskiy zavod im. Dzerzhinskogo (Dneprodzerzhinsk Plant im. Dzerzhinskiy) with carbon steel bottoms, with the difference that a fixing shank (Fig.2) is used on the blank. The shank eliminates the necessity of a large allowance on the straight edge of the bottom half (for the blank is not fixed in the bottom die, and it can shift too far under the punch). The proper shank length is 1/3 ÷ 1/4 of the blank radius, and it must be of the same metal as the blank body; the

Card 1/6

APPROVED FOR RELEASE: 06/20/2000 CIA-RDP86-00513R001446410003-8"

"APPROVED FOR RELEASE: 06/20/2000 CIA-RDP86-00513R001446410003-8

S/182/60/000/012/009/010
A161/A030

Stamping Large-Diameter Bottoms From Stainless Steel

machining allowance can be reduced to only 30-40 mm when the shank is used. Blanks are cut as shown (Fig.3) in two different ways depending on the sheet width (a_1 - machining allowance; b_1 width to which the allowance a_1 spreads in stamping the die). The dimension b_1 is calculated as in the following: The blank diameter is calculated first as equal to the diameter of ready stamping (or calculated by the volumes), and then the diameter of the unflanged bottom D_1 (Fig.4) is determined with the formula

$$D_1 = 2r \sin \frac{\varphi}{2}$$

and thereafter

$$b_1 = 0.7\pi \frac{D_1 - D_2}{2}$$

This applies to sheet thickness from 12 to 20 mm. Drawings of the special die and punch are included (Fig. 5 and 6). The two rows of holes, d and d_1 are for removal of stampings by inserting 25-30 mm diameter pins, and for the outlet of air during stamping. Stampings are pulled out of the die

Card 2/6

APPROVED FOR RELEASE: 06/20/2000 CIA-RDP86-00513R001446410003-8"

"APPROVED FOR RELEASE: 06/20/2000 CIA-RDP86-00513R001446410003-8

S/182/60/000/012/009/010
A161/A030

Stamping Large-Diameter Bottoms From Stainless Steel

on two chains spread with a distance rod; the chains are attached to the crane hook with one end by means of a ring, and with the other end to hooks inserted into lugs on the stamping. Blanks are heated to 1,000-1,100°C in view of high heat conductivity of 1Kh18N9T steel and its tendency to become susceptible to intercrystalline corrosion in the 500-700° interval; they cool down to 800-900° to the moment of deformation. No heat treatment of stampings is necessary when such heating is used . There are 7 figures.

Fig. 2 - the stamping shank; cross hatched area - the machining allowance.

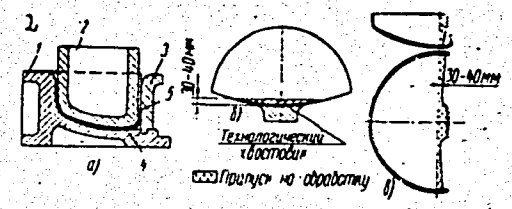

Card 3/6

APPROVED FOR RELEASE: 06/20/2000 CIA-RDP86-00513R001446410003-8"

"APPROVED FOR RELEASE: 06/20/2000 CIA-RDP86-00513R001446410003-8

S/182/60/000/012/009/010
A161/A030

Stamping Large-Diameter Bottoms From Stainless Steel

3

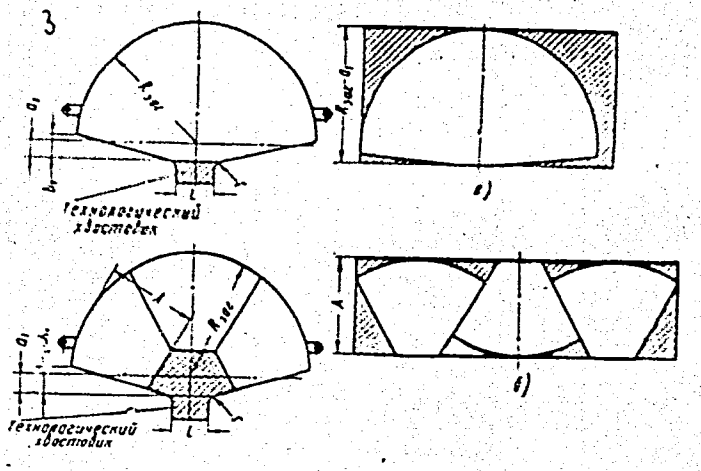

Fig. 3

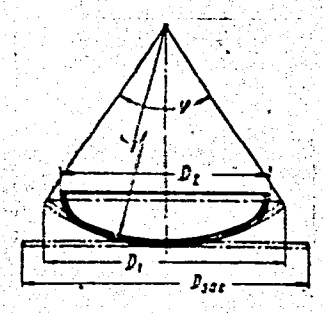

Fig. 4

Card 4/6

APPROVED FOR RELEASE: 06/20/2000 CIA-RDP86-00513R001446410003-8"

"APPROVED FOR RELEASE: 06/20/2000 CIA-RDP86-00513R001446410003-8

S/182/60/000/012/009/010
A161/A030

Stamping Large-Diameter Bottoms From Stainless Steel

Fig. 5

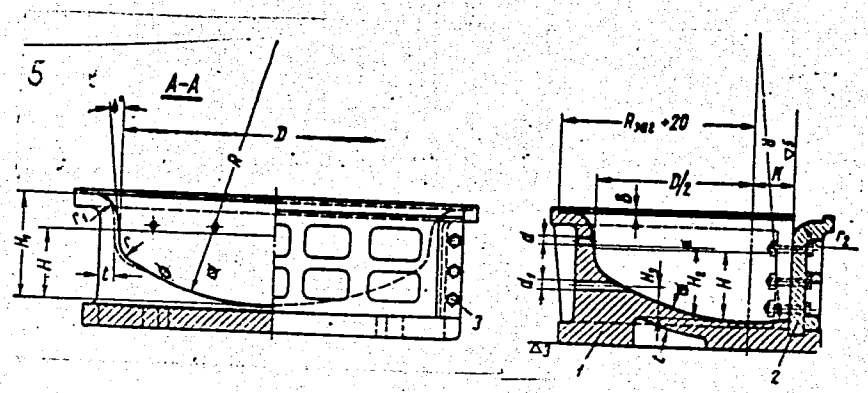

Card 5/ 6

APPROVED FOR RELEASE: 06/20/2000 CIA-RDP86-00513R001446410003-8"

"APPROVED FOR RELEASE: 06/20/2000 CIA-RDP86-00513R001446410003-8

S/182/60/000/012/009/010
A161/A030

Stamping Large-Diameter Bottoms From Stainless Steel

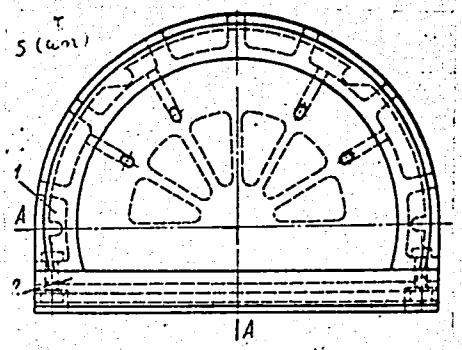

Fig. 5 (continued)

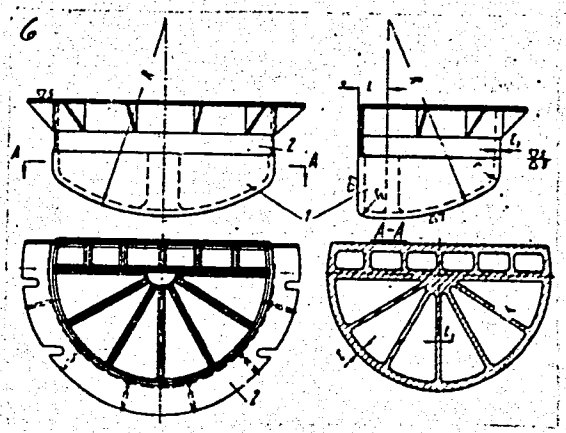

Fig. 6

Card 6/6

APPROVED FOR RELEASE: 06/20/2000 CIA-RDP86-00513R001446410003-8"

"APPROVED FOR RELEASE: 06/20/2000 CIA-RDP86-00513R001446410003-8

RYBATSKIY, V.V., inzh.

Using sliding rules for rapid determination of weight of forgings. Mashinostroitel' no.12:37-38 D '57. (MIRA 10:12)
(Steel forgings) (Slide rule)

APPROVED FOR RELEASE: 06/20/2000 CIA-RDP86-00513R001446410003-8"

"APPROVED FOR RELEASE: 06/20/2000 CIA-RDP86-00513R001446410003-8

TATARNIKOV, V.V.; ZANNES, A.N.; KYBAYEV, F.P.

Machine for hardening saw teeth for hot metal cutting.
Metallurg 3 no.8:28 Ag '58. (MIRA 11:9)

1. Zavod "Azovstal'."
(Metal-cutting tools)

APPROVED FOR RELEASE: 06/20/2000 CIA-RDP86-00513R001446410003-8"

"APPROVED FOR RELEASE: 06/20/2000 CIA-RDP86-00513R001446410003-8

SOV/130-58-8-12/18

AUTHORS: Tatarnikov, V.V., Zannes, A.N. and Rybayev, F. P.

TITLE: Installation for Tooth-hardening on Saws for the Hot Cutting of Metal (Agregat dlya uprochneniya zub'yev pil goryachey rezki metalla)

PERIODICAL: Metallurg, 1958, Nr 8, p 28 (USSR)

ABSTRACT: A brief account is given of one of two disc-saw, tooth-hardening installations service tested in 1956 at the "Azovstal'" Works. It consisted of a tooth cutter and the hardening unit. In the latter (figure), contact resistance between an electrode and the tooth heated a 3-mm deep layer of the tooth to the hardening temperature in 4 seconds (controlled by a time relay) for a tooth sharpened to 45-52° and 7-10 mm thick and with a voltage of 6 and amperage of 1 100. Experience at the works has shown that the durability of hot-metal saws with teeth heated in this way and quenched was three times that of unhardened saws. There is 1 figure.

ASSOCIATION: Zavod "Azovstal'" ("Azovstal'" Works)

1. Cutting tools--Hardening 2. Circular saws--Applications

Card 1/1

APPROVED FOR RELEASE: 06/20/2000 CIA-RDP86-00513R001446410003-8"

"APPROVED FOR RELEASE: 06/20/2000 CIA-RDP86-00513R001446410003-8

RYBAYLO, O.I.; KUSHTA, G.P.

Sample holder for a KROS-type X-ray camera. Zav.lab. 29 no.11: 1385-1386 '63. (MIRA 16:12)

1. Chernovitskiy gosudarstvennyy universitet.

APPROVED FOR RELEASE: 06/20/2000 CIA-RDP86-00513R001446410003-8"

"APPROVED FOR RELEASE: 06/20/2000 CIA-RDP86-00513R001446410003-8

L 41554-65 EWT(1)/EWT(m)/T/EWP(t)/EEC(b)-2/EWP(b)/EWA(c) Pi-4 IJP(c)
JD/JG/GG

ACCESSION NR: AP5001237 S/0126/64/018/005/0664/0669 33 32 B

AUTHOR: Val'chikovskaya, V. A.; Rybaylo, O. I.; Kushta, G. P.

TITLE: Temperature dependence of the characteristic x-ray temperature in gold

SOURCE: Fizika metallov i metallovedeniye, v. 18, no. 5, 1964, 664-669

TOPIC TAGS: Debye temperature, crystal, thermal vibration, gold 27

ABSTRACT: The authors have experimentally determined the dependence of the Debye temperature in gold in the temperature interval from 16 to 700C. The "anharmonicity" of gold was estimated. The relationship

$$\frac{d \ln \theta}{dT} \cong -2\eta\beta,$$

was used as the measure of anharmonicity of thermal vibrations of the crystalline atoms. The deviations between this relation and the published data are discussed. The results permit the determination of the coefficient of the quasielastic force and of the coefficients of the third and fourth order. Orig. art. has: 8 equations.

Card 1/2

APPROVED FOR RELEASE: 06/20/2000 CIA-RDP86-00513R001446410003-8"

"APPROVED FOR RELEASE: 06/20/2000 CIA-RDP86-00513R001446410003-8

L 41554-65
ACCESSION NR: AP5001237

2 graphs, and 2 tables.

ASSOCIATION: Chernovitskiy gosuniversitet (Chernovtsy State University)

SUBMITTED: 21Jan64 ENCL: 00 SUB CODE: MM, GC

NR REF SOV: 005 OTHER: 013

mll
Card 2/2

APPROVED FOR RELEASE: 06/20/2000 CIA-RDP86-00513R001446410003-8"

"APPROVED FOR RELEASE: 06/20/2000 CIA-RDP86-00513R001446410003-8

VAL'CHIKOVSKAYA, V.A.; RYBAYLO, O.I.; KUSHTA, G.P.

Temperature dependence of the X-ray characteristic temperature of gold. Fiz.met. i metalloved. 18 no.5:664-669 N '64. (MIRA 18:4)

1. Chernovitskiy gosudarstvennyy universitet.

APPROVED FOR RELEASE: 06/20/2000 CIA-RDP86-00513R001446410003-8"

"APPROVED FOR RELEASE: 06/20/2000 CIA-RDP86-00513R001446410003-8

SOV/137-58-9-19845

Translation from: Referativnyy zhurnal, Metallurgiya, 1958, Nr 9, p 249 (USSR)

AUTHORS: Kushta, G.P., Rybaylo, O.I.

TITLE: On the Problem of the Structural State of the Lattice of a Naturally-aged, Supersaturated Solid Solution With an Al Base. I. An Investigation of the Initial Stage of Aging in an Al Alloy by the Method of Harmonic Analysis of Intensity-distribution Curves of X-ray Interference Lines (K voprosu o strukturnom sostoyanii reshetki yestestvenno sostarennogo peresyshchennogo rastvora na osnove alyuminiya. I. Issledovaniye nachal'noy stadii stareniya alyuminiyevogo splava metodom garmonicheskogo analiza krivykh raspredeleniya intensivnosti rentgenovskikh interferentsiy)

PERIODICAL: Nauchn. yezhegodnik. Chernovitsk. un-t, 1956 (1957), Vol 1, Nr 2, pp 272-275

ABSTRACT: X-ray diffraction studies were performed on duralumin of the D-1 type, quenched in water at a temperature of 510°C and subjected to natural aging at room temperature for a period of 12 days. A harmonic analysis of the intensity curves was performed on line (422). It is established that the widening of the

Card 1/2

APPROVED FOR RELEASE: 06/20/2000 CIA-RDP86-00513R001446410003-8"

"APPROVED FOR RELEASE: 06/20/2000 CIA-RDP86-00513R001446410003-8

SOV/137-58-9-19845

On the Problem of the Structural State of the Lattice (cont.)

lines is connected with the dispersion of blocks as well as with micro-stresses. A Fourier analysis of the shape of the line demonstrated that the mean-square displacement of atoms, $\sqrt{\overline{\Delta L}^2}$, at distances up to 50-70 angstrom increases as a linear function of L, which corresponds to the presence of a homogeneous-deformation region the linear dimensions of which are of the order of $(0.5-0.7)\times10^{-6}$ cm. The relative deformation of the lattice, $\epsilon = \sqrt{\overline{\Delta L}^2}/L$, attains a value of approximately 10^{-3} cm. The magnitude of the mean dimension of regions of coherent dispersion, computed from the value of the Fourier coefficient, amounts to 0.56×10^{-6} cm in the case of naturally-aged duralumin; this value coincides with the dimensions of the regions of homogeneous deformation. Along with lattice distortions, structural peculiarities discovered in a naturally-aged alloy determine the degree of hardening of the latter.

L.M.

1. Aluminum alloys--Crystal structure 2. Aluminum alloys--Lattices
3. Aluminum alloys--Stresses 4. X-ray diffraction analysis--Applications
5. Harmonic analysis--Applications

TITLE: Duralumin

Card 2/2

APPROVED FOR RELEASE: 06/20/2000 CIA-RDP86-00513R001446410003-8"

"APPROVED FOR RELEASE: 06/20/2000 CIA-RDP86-00513R001446410003-8

L 40182-66 EWT(m)/T/EWP(t)/ETI IJP(c) JD/JG

ACC NR: AP6029384 SOURCE CODE: UR/0126/66/021/004/0519/0523

AUTHOR: Val'chikovskaya, V. A.; Kushta, G. P.; Rybaylo, O. I.

ORG: Chernovitsy State University (Chernovitskiy gosuniversitet)

TITLE: Temperature dependence of the lattice parameter and intensity of regular x-ray reflections for Au-Ag alloys [This paper was presented at Section of Lattice Dynamics of the 8th All-Union Conference on Roentgenography held in Leningrad in November 1964.]

SOURCE: Fizika metallov i metallovedeniye, v. 21, no. 4, 1966, 519-523

TOPIC TAGS: temperature dependence, lattice parameter, x ray study, silver alloy, gold alloy, alloy composition, radiography

ABSTRACT: The article presents the results of an investigation of the temperature and concentration dependence of lattice parameter and characteristic temperature for Au-Ag alloys containing 10, 25, 40, 60, 70 and 90% Ag, along with calculations of the universal lattice anharmonicity parameter $n\gamma\beta \approx \frac{d \ln \theta}{dT}$ (γ is the Grueneisen constant, β is the coefficient of volume expansion). Composition-property diagrams are constructed for Au-Ag alloys with "property" pertaining to the values of $\theta_{x\text{-ray}}$ and $n\gamma\beta$. It is shown that these diagrams are in qualitative correspondence with the present-day concepts of the statistical theory of

Card 1/2 UDC: 539.26:669.225

APPROVED FOR RELEASE: 06/20/2000 CIA-RDP86-00513R001446410003-8"