"APPROVED FOR RELEASE: 08/23/2000 CIA-RDP86-00513R001446620001-7

ACCESSION NR: AT3008540 S/2984/63/000/000/0037/0052

AUTHORS: Yegorov, V. P.; Sabinin, Yu. A.

TITLE: Automatic control systems in astronomical instruments utilizing spherical coordinate transformers

SOURCE: Novaya tekhnika v astronomii; materialy* soveshch. Komissii priborostroyen. pri Astronom. sovete AN SSSR, Moskva, 18-20 apr. 1961 g. Moscow, Izd vo AN SSSR, 1963, 37-52

TOPIC TAGS: coordinate transformer, equatorial coordinate, telescope, azimuthal system monitored telescope, positioning, coordinate transformer synchronizer, rotatory transformer, feedback scheme, near-polar zone

ABSTRACT: Various automatic coordinate transformers (from the equatorial coordinate system used on a telescope to the azimuthal system used on the observatory dome) for synchronizing the telescope to the dome have been discussed. The complete electric circuit diagrams of centrally and eccentrically monitored telescopes are included under designations PK-5 and PK-6 respectively, developed at the Electromechanical Institute. The construction details of the latest model PK-7 A, B, automatic angle positioning coordinate transformer synchronizers are presented.

Card 1/4

APPROVED FOR RELEASE: 08/23/2000 CIA-RDP86-00513R001446620001-7"

"APPROVED FOR RELEASE: 08/23/2000 CIA-RDP86-00513R001446620001-7

ACCESSION NR: AT3008540

Experimental tests with laboratory models show an error in solving the problem $p = f(t, \delta)$, $p = f(A,z)$ (t - hour angle, δ - declination, A - azimuth, z - distance from the zenith) at $\varphi = 45^\circ$ not exceeding $\Delta p = \pm 10\text{-}15'$. The system has an off-position where the error signal strength falls sharply, increasing the solution error. It is shown that the potential on the cosine winding of the rotatory transformer (SKVT-P) has a simple functional dependence which permits the application of a feedback scheme ensuring an improved accuracy in the near-zenith zone of model PK-7-A and the near-polar zone of the PK-7-B. The new synchronizer is recommended for use on old and new telescopes designed with azimuthal and central-equatorial monitors. The detailed schematics of the two transformers are shown in Figures 1 and 2 on the Enclosures. Orig. art. has: 15 equations and 12 figures.

ASSOCIATION: Institut elektromekhaniki GK SM SSSR po avtomatiz. i mashinostr. (Institute of Electromechanics GK SM SSSR for Automation and Machine Design)

SUBMITTED: 00 DATE ACQ: 16Oct63 ENCL: 02

SUB CODE: AS NO REF SOV: 005 OTHER: 000

Card 2/4

APPROVED FOR RELEASE: 08/23/2000 CIA-RDP86-00513R001446620001-7"

"APPROVED FOR RELEASE: 08/23/2000 CIA-RDP86-00513R001446620001-7

ACCESSION NR: AT3008540 S/2984/63/000/000/0037/0052

AUTHORS: Yegorov, V. P.; Sabinin, Yu. A.

TITLE: Automatic control systems in astronomical instruments utilizing spherical coordinate transformers

SOURCE: Novaye tekhnika v astronomii; materialy* soveshch. Komissii priborostroyen. pri Astronom. sovete AN SSSR, Moskva, 18-20 apr. 1961 g. Moscow, Izd vo AN SSSR, 1963, 37-52

TOPIC TAGS: coordinate transformer, equatorial coordinate, telescope, azimuthal system monitored telescope, positioning, coordinate transformer synchronizer, rotatory transformer, feedback scheme, near-polar zone

ABSTRACT: Various automatic coordinate transformers (from the equatorial coordinate system used on a telescope to the azimuthal system used on the observatory dome) for synchronizing the telescope to the dome have been discussed. The complete electric circuit diagrams of centrally and eccentrically monitored telescopes are included under designations PK-5 and PK-6 respectively, developed at the Electromechanical Institute. The construction details of the latest model PK-7 A, B, automatic angle positioning coordinate transformer synchronizers are presented.

Card 1/4

APPROVED FOR RELEASE: 08/23/2000 CIA-RDP86-00513R001446620001-7"

"APPROVED FOR RELEASE: 08/23/2000 CIA-RDP86-00513R001446620001-7

ACCESSION NR: AT3008540

Experimental tests with laboratory models show an error in solving the problem $p = f(t, \delta)$, $p = f(A, z)$ (t - hour angle, δ - declination, A - azimuth, z - distance from the zenith) at $\varphi = 45^{\circ}$ not exceeding $\Delta p = \pm 10\text{-}15'$. The system has an off-position where the error signal strength falls sharply, increasing the solution error. It is shown that the potential on the cosine winding of the rotatory transformer (SKVT-P) has a simple functional dependence which permits the application of a feedback scheme ensuring an improved accuracy in the near-zenith zone of model PK-7-A and the near-polar zone of the PK-7-B. The new synchronizer is recommended for use on old and new telescopes designed with azimuthal and central-equatorial monitors. The detailed schematics of the two transformers are shown in Figures 1 and 2 on the Enclosures. Orig. art. has: 15 equations and 12 figures.

ASSOCIATION: Institut elektromekhaniki GK SM SSSR po avtomatiz. i mashinostr. (Institute of Electromechanics GK SM SSSR for Automation and Machine Design)

SUBMITTED: 00 DATE ACQ: 16Oct63 ENCL: 02

SUB CODE: AS NO REF SOV: 005 OTHER: 000

Card 2/4

APPROVED FOR RELEASE: 08/23/2000 CIA-RDP86-00513R001446620001-7"

"APPROVED FOR RELEASE: 08/23/2000 CIA-RDP86-00513R001446620001-7

ACCESSION NR: AT3008541 S/2984/63/000/000/0060/0079

AUTHORS: Korotkov, S. V.; Myasnikov, V. A.; Sabinin, Yu. A.

TITLE: Some principles for constructing a discrete system of controls for azimuthal astronomical instruments

SOURCE: Novaya tekhnika v astronomii; materialy* soveshch. Komissii priborostroyen. pri Astronom. sovete AN SSSR, Moskva, 18-20 apr. 1961 g. Moscow, Izd-vo AN SSSR, 1963, 60-79

TOPIC TAGS: control system, azimuthal telescope, azimuthal mounting, automatic control

ABSTRACT: The authors have carefully investigated the advantages of an azimuthal mounting over the standard equatorial mounting for telescopes and have examined the means of controlling such instruments. The range of control in a system to direct azimuthal instruments is theoretically infinite. In practice it is possible to approach, for velocity control, the points of elongation (the transition of velocity through zero). The authors have worked out a method for lowering the frequencies of iteration and of comparison by means of a control system for velocity which permits close approximation to zero velocity with a rather wide range in

Card 1/2

APPROVED FOR RELEASE: 08/23/2000 CIA-RDP86-00513R001446620001-7"

"APPROVED FOR RELEASE: 08/23/2000 CIA-RDP86-00513R001446620001-7

ACCESSION NR: AT3008541

control. This method allows selection of the optical structure of a digital following system for controlling azimuthal instruments. The guidance process according to position must be done by comparison, in a central selection station, of the true and computed values of coordinates, not of functions of these coordinates. A central selection station for controlling azimuthal instruments by a serial digital differential analyzer is simply designed, with the possibility of control by position or by velocity. The authors' method of setting up a central selection system may find practical use in azimuthal telescopes, radiotelescopes, and other similar instruments of automatic control requiring very high precision and smooth operation. Orig. art. has: 12 figures and 27 formulas.

ASSOCIATION: Institut elektromekhaniki GK SM SSSR po avtomatiz. i mashinostr. (Institute of Electromechanics GK SM SSSR for Automation and Machine Design)

SUBMITTED: 00 DATE ACQ: 16Oct63 ENCL: 00

SUB CODE: AA, IE NO REF SOV: 003 OTHER: 000

Card 2/2

APPROVED FOR RELEASE: 08/23/2000 CIA-RDP86-00513R001446620001-7"

"APPROVED FOR RELEASE: 08/23/2000 CIA-RDP86-00513R001446620001-7

S/2984/63/000/000/0080/0091

ACCESSION NR: AT3008542

AUTHORS: Goreva, G. I.; Sabinin, Yu. A.; Nikolayev, P. V.; Shumakher, A. N.

TITLE: Automatic compensation of curvature in stellar telescopes

SOURCE: Novaya tekhnika v astronomii; materialy* soveshch. Komissii priborostroyen. pri Astronom. sovete AN SSSR, Moskva, 18-20 aprelya 1961 g. Moscow, Izd-vo AN SSSR, 1963, 80-91

TOPIC TAGS: Cassegrain telescope, photoelectric following system, AP 250 Cassegrain telescope, automatic control equipment, BTM 4 transformer, ETSh 2.6 meter telescope

ABSTRACT: The problem of building apparatus to compensate for deformation (bending) of the telescope tube has arisen in recent years because of construction of large, extensively automatic, astronomical instruments. Since all telescopes, besides having a meridian circle and a transit, are built on an equatorial mounting, compensation of directional error because of bending must be made by proper correction of both the declination axis and the hour axis. From geometrical considerations, the authors have found expressions to determine what the corrections for zenith and hour angles must be. The corrections are then made automatically by

Card 1/3

[illegible] for Automation and Machine Design)

APPROVED FOR RELEASE: 08/23/2000 CIA-RDP86-00513R001446620001-7"

"APPROVED FOR RELEASE: 08/23/2000 CIA-RDP86-00513R001446620001-7

ACCESSION NR: AT3008543 S/2984/63/000/000/0091/0097

AUTHORS: Rozhnova, I. P.; Sabinin, Yu. A.

TITLE: A photoelectric method of studying erratic star images

SOURCE: Novaya tekhnika v astronomii; materialy* soveshch. Komissii priborostroyen. pri Astronom. sovete AN SSSR, Moskva, 18-20 apr. 1961 g. Moscow, Izd-vo AN SSSR, 1963, 91-97

TOPIC TAGS: photoelectric method, star image, scintillation, star tremor, EPP 09 recorder

ABSTRACT: The most important characteristics of erratic star images for the purpose of setting up a proper automatic apparatus are: 1) the frequency spectrum of scintillation of star brightness, 2) the frequency spectrum of star tremor, 3) the relation of maximal and mean-square amplitude of scintillation, limited by a narrow-band resonance filter, to the average intensity of the modulated light flux in the same frequency band, and 4) the relation of maximal and mean-square amplitude of the deviation from optic axis (because of tremor) to the average diameter of the star image. The second requires the greatest attention at the present time and is the chief concern of the authors in developing their method. This photoelectric method

Card 1/3

APPROVED FOR RELEASE: 08/23/2000 CIA-RDP86-00513R001446620001-7"

"APPROVED FOR RELEASE: 08/23/2000 CIA-RDP86-00513R001446620001-7

ACCESSION NR: AT3008543

for studying star images was worked out at the Institut elektromekhaniki (Institute of Electromechanics). A more objective method of studying star tremors, with special concern for automatic operation, was developed. The setup is shown diagrammatically in Fig. 1 on the Enclosure. Special care was required in using the photomultipliers, and the authors have devoted considerable space to a discussion of this and to a description of the circuits. Experimental work at the Crimean Astrophysical Observatory in the summer of 1960 has, on the whole, confirmed the validity of the principles used by the authors in developing their method. Orig. art. has: 3 figures.

ASSOCIATION: Institut elektromekhaniki GK SM SSSR po avtomatiz. i mashinostr. (Institute of Electromechanics GK SM SSSR for Automation and Machine Design)

SUBMITTED: 00 DATE ACQ: 16Oct63 ENCL: 01

SUB CODE: AA, EC NO REF SOV: 004 OTHER: 004

Card 2/3

APPROVED FOR RELEASE: 08/23/2000 CIA-RDP86-00513R001446620001-7"

"APPROVED FOR RELEASE: 08/23/2000 CIA-RDP86-00513R001446620001-7

ACCESSION NR: AT3008543

ENCLOSURE: 01

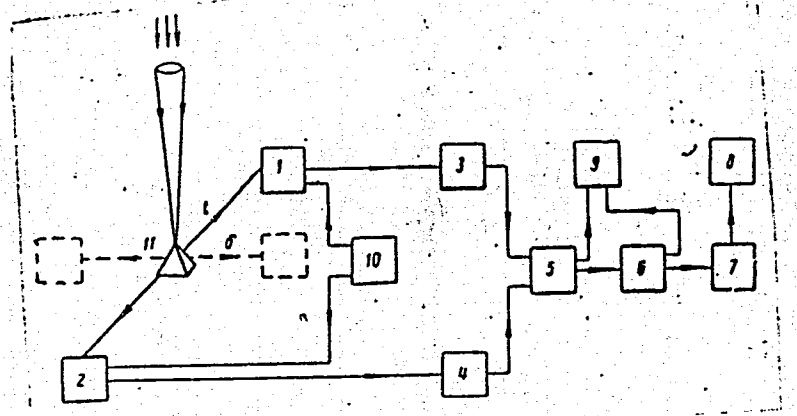

Fig. 1. Block diagram of setup for photoelectric study of star images.

1,2 - photomultipliers; 3,4 - preamplifiers; 5 - balanced amplifier; 6 - linear detector; 7 - frequency-spectrum analyzer; 8 - EPP-09 recording device; 9 - multichannel loop oscillograph; 10 - sound generator; 11 - four-faced pyramid with 45° angle.

Card 3/3

APPROVED FOR RELEASE: 08/23/2000 CIA-RDP86-00513R001446620001-7"

"APPROVED FOR RELEASE: 08/23/2000 CIA-RDP86-00513R001446620001-7

24080
S/144/61/000/007/003/003
D229/D303

3.1200

AUTHORS: Sabinin, Yu.A., Candidate of Technical Sciences, and Mamedova, Z.N., Aspirant

TITLE: Electromechanical program-control system by means of a telescope

PERIODICAL: Izvestiya vysshikh uchebnykh zavedeniy. Electromekhanika, no. 7, 1961, 103 - 108

TEXT: A program-control system is described incorporating a small-size telescope (like those used in the atmospheric-transmittance service). It is used nightly for typical observations of a small number of bright stars. The light from the star is registered by an automatic photometer. In view of the relatively small accuracy of tracking required, it is convenient to use continuously operating elements in the system; this simplifies design and increases reliability. The coordinates used are the deviation δ = const. and the hour-angle t. The telescope (in parallactic mounting) tracks the star by rotation of its tube about two mutually perpendicular

Card 1/3

APPROVED FOR RELEASE: 08/23/2000 CIA-RDP86-00513R001446620001-7"

"APPROVED FOR RELEASE: 08/23/2000 CIA-RDP86-00513R001446620001-7

24080
S/144/61/000/007/003/003
D229/D303

Electromechanical program-control ...

axes, and is kept pointed at the star by rotation of its tube about the hour-axis (by means of a clock mechanism). Due to refraction, precession, nutation etc., corrections have to be introduced into the theoretical formulas. The errors due to design can be neglected in small telescopes. The system contains a device for refraction corrections. For storing coordinates it contains rotary converters and program converters (PC). The voltage at each pair of leads of a PC is proportional to the sine and cosine of α or δ. (α = const. is the right ascent of the star). For corrections, the PC has additional windings which permit great accuracy in fixing the angles. By means of the rotary converters, any two extra stars can be included in the observation program. The voltages from the converters are applied to relays which operate according to a preset program (on magnetic tape or other storing means). The computing device for t and for the corrections to refraction consists also of rotary converters, which perform addition and trigonometric transformations. The angle t is determined by voltages (proportional to sin α and cos α) applied to the input of a rotary converter

Card 2/3

APPROVED FOR RELEASE: 08/23/2000 CIA-RDP86-00513R001446620001-7"

"APPROVED FOR RELEASE: 08/23/2000 CIA-RDP86-00513R001446620001-7

S/035/62/000/007/056/083
A001/A101

3,1270

AUTHORS: Sabinin, Yu. A., Yegorov, V. P.

TITLE: Automatic control system for telescope dome with a spheric coordinate converter on rotating transformers

PERIODICAL: Referativnyy zhurnal, Astronomiya i Geodeziya, no. 7, 1962, 89, abstract 7A641 ("Izv. Krymsk. astrofiz. observ.", 1961, v. 26, 395 - 414, Engl. summary)

TEXT: The authors consider the design of an automatic system for matching the dome rotation and displacement of the wind curtain with the movement of the telescope tube on the equatorial mounting. The principal element of this system is a converter of spherical coordinates (CC) which converts equatorial coordinates of the telescope into azimuthal coordinates of the dome slit window. In the first stage were developed systems of dome movement with CC on the basis of an electromechanical simulating device (CC-III and CC-IV). A further stage was devising the system of synchronization of the dome and telescope with the use of CC based on rotating transformers. This system has a number of essential advantages in comparison with others. The Institute of Electromechanics, AS USSR, has designed a coor-

Card 1/2

APPROVED FOR RELEASE: 08/23/2000 CIA-RDP86-00513R001446620001-7"

"APPROVED FOR RELEASE: 08/23/2000 CIA-RDP86-00513R001446620001-7

NIKOLAYEV, P.V.; SABININ, Yu.A.

Electric generator for luminous flux modulators. Priborostroenie no.1:27-29 Ja '62. (MIRA 15:1)
(Electric generators) (Photoelectric measurements)

APPROVED FOR RELEASE: 08/23/2000 CIA-RDP86-00513R001446620001-7"

"APPROVED FOR RELEASE: 08/23/2000 CIA-RDP86-00513R001446620001-7

32946
S/030/62/000/001/007/011
B104/B102

3,1220 (also 1051, 1057)

AUTHOR: Sabinin, Yu. A., Candidate of Technical Sciences

TITLE: Electric drive and automation of telescopes

PERIODICAL: Akademiya nauk SSSR. Vestnik, no. 1, 1962, 68 - 73

TEXT: At the Institut elektromekhaniki (Institute of Electromechanics) in Leningrad, a continuously operating photoelectric follow-up system was built, permitting the control of a telescope according to a star image. To permit the control by weak stars, the system works with a modulated light flux of the respective star. To prevent the effect of flickering, an optimum modulation frequency of the light flux (40 - 500 cps) was found by experiments in Pulkovo and Krym. The light flux is modulated by half-disks or disks with several holes. An amplifier with frequency modulation amplifies the signal of the modulated light flux. The direction of shift of the star image is determined by a reference-voltage generator arranged on the modulator axis. This generator is a two-phase synchronous motor. The voltage phase of this generator agrees with the main-signal phase. The systems for photoelectric guiding may be divided

Card 1/2

APPROVED FOR RELEASE: 08/23/2000 CIA-RDP86-00513R001446620001-7"

"APPROVED FOR RELEASE: 08/23/2000 CIA-RDP86-00513R001446620001-7

S/573/62/000/007/002/015
D201/D308

3,1710

AUTHORS: Sabinin, Yu.A. and Yegorov, V.P.

TITLE: Analog computers in combined position angle and velocity control of azimuthal astronomical instruments

SOURCE: Akademiya nauk SSSR. Institut elektromekhaniki. Sbornik rabot po voprosam elektromekhaniki, no. 7, 1962. Avtomatizatsiya, telemekhanizatsiya i priborostroyeniye, 158-171

TEXT: From the analysis of dynamic operation of astronomical instruments, determining the azimuthal coordinates (A, Z) and the position angle p as functions of the equatorial coordinate system (t, δ), the authors show that the automatic guidance of such instruments may be achieved by combined velocity and angle control, the former being the fundamental one. They further describe the principle of operation and construction of the azimuthal and position clocks with non-uniform motion, which determine the telescope

Card 1/2

APPROVED FOR RELEASE: 08/23/2000 CIA-RDP86-00513R001446620001-7"

"APPROVED FOR RELEASE: 08/23/2000 CIA-RDP86-00513R001446620001-7

S/573/62/000/007/003/015
D201/D308

3,1710

AUTHORS: Yegorov, V.P., Ivanova, M.A. and Sabinin, Yu.A.

TITLE: Coordinate transformation systems for automatic position angle determination, based on transformer resolvers

SOURCE: Akademiya nauk SSSR, Institut elektromekhaniki. Sbornik rabot po voprosam elektromekhaniki. no. 7, 1962. Avtomatizatsiya, telemekhanizatsiya i priborostroyeniye, 171-180

TEXT: The authors describe the circuits and analyze the operation of coordinate transformation devices ПК-VII (PK-VII) used with systems of automatic determination of the position angle p in astronomical instruments and discuss the results of their investigation on laboratory analogs. There are two versions of these devices: model PK-VII A operates with equatorial coordinates t, δ, the other, PK-VII B, with azimuthal coordinates A, Z. Both are based on transformer resolvers, operating as coordinators, coordinate transformers or references. The results of laboratory investigations of the per-

Card 1/2

APPROVED FOR RELEASE: 08/23/2000 CIA-RDP86-00513R001446620001-7"

"APPROVED FOR RELEASE: 08/23/2000 CIA-RDP86-00513R001446620001-7

KHOKHLOV, D.G., kand.tekhn.nauk; POPKO, V.P., inzh.; SABININ, Yu.A., inzh.; PETUKHOVA, V.V., inzh.

Gravel-shaped agloporite of ashes from the Krasnogorsk and Argayash thermal electric plants and lightweight concretes made from it. Sbor.trud.VNIINSM no.6:25-37 '62. (MIRA 15:12)

1. Sverdlovskiy sovet narodnogo khozyaystva.
(Ash (Technology)) (Lightweight concrete)

APPROVED FOR RELEASE: 08/23/2000 CIA-RDP86-00513R001446620001-7"

"APPROVED FOR RELEASE: 08/23/2000 CIA-RDP86-00513R001446620001-7

3.1710

S/573/62/000/007/005/015
D201/D308

AUTHORS: Korotkov, S.V., Myasnikov, V.A. and Sabinin, Yu.A.

TITLE: Problems in the analysis of sampled-data follow-up systems for the control of azimuthal instruments

SOURCE: Akademiya nauk SSSR. Institut elektromekhaniki. Sbornik rabot po voprosam elektromekhaniki. no. 7, 1962. Avtomatizatsiya, telemekhanizatsiya i priborostroyeniye, 192-209

TEXT: The authors analyze the problems involved in designing highly accurate mechanisms for guiding astronomical instruments. The analysis shows that, although the theoretical dynamic range of operation of such control systems is infinitely great, the zero velocity may in practice be approached only at the elongation points. The most suitable method is that of lowering the comparison frequency by introducing velocity control, which makes it possible not only to approach the zero velocity condition but also to realize a wide effective control range. Since the parameters of azimuthal instru-

Card 1/2

APPROVED FOR RELEASE: 08/23/2000 CIA-RDP86-00513R001446620001-7"

"APPROVED FOR RELEASE: 08/23/2000 CIA-RDP86-00513R001446620001-7

ments are related to each other by trigonometric expressions, which in their discrete form are most easily solved by digital differential analyzers, the operation of such an analyzer, as related to sampled data position control systems, is considered and its optimal design discussed. The analyzer should be used for comparing the actual and theoretical numerical values of coordinates of the position control process, not their indirect functions. The use of a digital differential analyzer allows position and velocity control and results in simple structures of both continuous and sampled-data control systems. The results of the analysis are used for designing a system for position and velocity control of an astronomical instrument including a digital differential analyzer as its integral part and operating on a real time scale. There are 4 figures.

VB

APPROVED FOR RELEASE: 08/23/2000 CIA-RDP86-00513R001446620001-7"

"APPROVED FOR RELEASE: 08/23/2000 CIA-RDP86-00513R001446620001-7

SABININ, Yu.A.; POPOV, O.V.

Photoelectric servosystems for program controlled machining of plane parts. Sbor.rab.po vop.elektromekh. no.7:210-227 '62. (MIRA 16:1)

(Machine tools--Numerical control) (Automatic control)

APPROVED FOR RELEASE: 08/23/2000 CIA-RDP86-00513R001446620001-7"

"APPROVED FOR RELEASE: 08/23/2000 CIA-RDP86-00513R001446620001-7

ZABOROVSKIY, Sergey Aleksandrovich, assistent; KULIKOV, Sergey Nikolayevich, assistent; POPOV, Oleg Vladimirovich, mladshiy nauchnyy sotrudnik; SABININ, Yuriy Alekseyevich

Automated electric drive of a coal loader. Izv. vys. ucheb. zav.; elektromekh. 5 no.7:810-816 '62. (MIRA 15:10)

1. Leningradskiy politekhnicheskiy institut (for Zaborovskiy, Kulikov).

(Coal-handling machinery—Electric driving)

APPROVED FOR RELEASE: 08/23/2000 CIA-RDP86-00513R001446620001-7"

"APPROVED FOR RELEASE: 08/23/2000 CIA-RDP86-00513R001446620001-7

KONSON, Aron Solomonovich; PAVLININ, V.M., retsenzent; BATOV, B.I., retsenzent; CHERNUKHIN, A.A., retsenzent; VITEBSKIY, I.D., retsenzent; SABININ, Yu.A., red.; SOBOLEVA, Ye.M., tekhn. red.

[Economic principles of the design of electric machinery, apparatus, and devices] Ekonomicheskoe obosnovanie proektov elektricheskikh mashin, apparatov, priborov. Moskva, Gosenergoizdat, 1963. 218 p. (MIRA 16:8)

1. Ural'skiy politekhnicheskiy institut (for Pavlinin, Batov).
2. Vsesoyuznyy zaochniy energeticheskiy institut (for Chernukhin, Vitebskiy).

(Electronic apparatus and appliances)
(Electric machinery)

APPROVED FOR RELEASE: 08/23/2000 CIA-RDP86-00513R001446620001-7"

"APPROVED FOR RELEASE: 08/23/2000 CIA-RDP86-00513R001446620001-7

SABININ, Yu.A.; NIKOLAYEV, P.V.

System for the automatic control of a star interferometer. Sbor. rab. po vop. elektromekh. no.9:161-175 '63. (MIRA 17:2)

APPROVED FOR RELEASE: 08/23/2000 CIA-RDP86-00513R001446620001-7"

"APPROVED FOR RELEASE: 08/23/2000 CIA-RDP86-00513R001446620001-7

YEGOROV, V.P.; SABININ, Yu.A.

Analysis of errors in spherical coordinate converters using revolving transformers. Sbor. rab. po vop. elektromekh. no.9:197-219 '63. (MIRA 17:2)

APPROVED FOR RELEASE: 08/23/2000 CIA-RDP86-00513R001446620001-7"

"APPROVED FOR RELEASE: 08/23/2000 CIA-RDP86-00513R001446620001-7

ROZHNOVA, I.P.; SABININ, Yu.A.

Statistical analysis of a random nonelectrical process using a photoelectric technique. Sbor. rab. po vop. elektromekh. no.9:219-225 '63. (MIRA 17:2)

APPROVED FOR RELEASE: 08/23/2000 CIA-RDP86-00513R001446620001-7"

"APPROVED FOR RELEASE: 08/23/2000 CIA-RDP86-00513R001446620001-7

SABININ, Yuriy Alekseyevich, kand. tekhn. nauk, dotsent; POPOV, Oleg Vladimirovich, assistent

An a.c. servo drive for closing a navigation lock. Izv. vys. ucheb. zav.; elektromekh. 6 no.9:1098-1107 '63. (MIRA 16:12)

1. Institut elektromekhaniki AN SSSR.

APPROVED FOR RELEASE: 08/23/2000 CIA-RDP86-00513R001446620001-7"

"APPROVED FOR RELEASE: 08/23/2000 CIA-RDP86-00513R001446620001-7

ACCESSION NR: AT4015860 S/2573/63/000/009/0161/0175

AUTHOR: Sabinin, Yu. A.; Nikolayev, P. V.

TITLE: An automatic control system for a stellar interferometer

SOURCE: AN SSSR. Institut elektromekhaniki. Sbornik rabot po voprosam elektromekhaniki, no. 9, 1963. Avtomatizatsiya, telemekhanizatsiya i priborostroyeniye (Automation, telemechanization and instrument manufacture), 161-175

TOPIC TAGS: astronomy, telescope, interferometer, stellar interferometer, telescope control system, tracking, photoelectric tracking

ABSTRACT: The automatic interferometer control system has 3 principal subsystems which also specify its performance: (a) an automatic guiding subsystem which points the instrument, mounted on an azimuthal platform, toward any point in the sky which is given in equatorial coordinates; (b) a coarse tracking subsystem; (c) a photoelectric guiding subsystem. After the desired equatorial coordinates of the star (direct ascent α and declination δ) and the proper stellar times are selected on the control panel the guiding subsystem guides the interferometer tube toward the star at a velocity of 200 rev/24 hrs and with an accuracy of ±10 seconds of arc. Then the astronomer readjusts the pointing accuracy visually and by manual controls. After this the coarse tracking subsystem is

Card 1/4

APPROVED FOR RELEASE: 08/23/2000 CIA-RDP86-00513R001446620001-7"

"APPROVED FOR RELEASE: 08/23/2000 CIA-RDP86-00513R001446620001-7

ACCESSION NR: AT4015860

switched in and the photoelectric guiding subsystem whose field of view is 2 sec. of arc, is also turned on. The stellar time variable is supplied continuously to the system and the tracking proceeds according to the motion of the earth. The guiding and coarse tracking subsystems use the same basic components with few additional signals being switched in and out for each operation. Since velocities of stars in azimuthal coordinates are nonlinear and can be infinite, the following maximum velocities were established for the system: coarse tracking: azimuth A-8 rev/24 hrs., zenith Z-0.7-0.8 rev/24 hrs.; photoelectric guidance: A and Z - 0.2 rev/24 hrs. The coarse tracking subsystem includes a coordinate transformation device and is entirely instrumented by analog methods using synchro motors (rotary transformers). The tracking system (for both A and H axes) consists of an electronic amplifier, an amplidyne, driving motor, tachometer, reduction gear and angular error signal sources. An AGC system is used in azimuth tracking. The use of two cascaded synchros in elevation tracking assures independent operation of the course tracking and fine photoelectric guiding systems. Two types of feedback are used for stabilization: velocity feedback from the tachometer and voltage feedback from the armature of the driving motor. Schematic diagram of these tracking systems are included in the article. The photoelectric guiding system provides fine tracking of the star. This system was described in detail by P. V. Nikolayev (Sbornik rabot po voprosam elektromekhaniki, 4, Izd. AN SSSR, Moskva-Leningrad, 1960) and its block diagram is shown in Figure 1 of the Enclosure. The

Card 2/4

APPROVED FOR RELEASE: 08/23/2000 CIA-RDP86-00513R001446620001-7"

"APPROVED FOR RELEASE: 08/23/2000 CIA-RDP86-00513R001446620001-7

ACCESSION NR: AT4015860

laboratory tests have shown that this system is capable of an accuracy of 0.4 seconds of arc. Field tests will be performed as soon as the entire system is installed at the Glavnaya astronomicheskaya observatoriya AN SSSR (Main Astronomical Observatory). Orig. art. has: 9 figures, 1 table and 15 formulas.

ASSOCIATION: Institut elektromekhaniki AN SSSR (Institute of Electromechanics AN SSSR)

SUBMITTED: 00 DATE ACQ: 20Dec63 ENCL: 01

SUB CODE: AA, EE NO REF SOV: 005 OTHER: 000

Card 3/4

APPROVED FOR RELEASE: 08/23/2000 CIA-RDP86-00513R001446620001-7"

"APPROVED FOR RELEASE: 08/23/2000 CIA-RDP86-00513R001446620001-7

ACCESSION NR: AT4015860

ENCLOSURE: 01

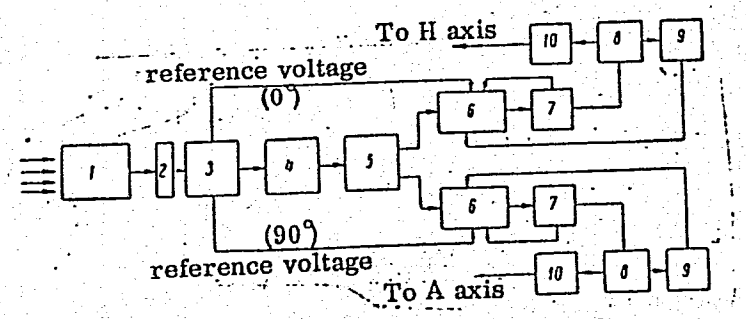

Fig. 1. Block diagram of the photoelectric guiding system.

1 — Optical system

2 — Sliding lens (deliberate displacement)

3 — Error sensitive photo multiplier

4 — Error signal preamplifier

5 — Bandpass filter (light modulation frequency 37.5 cps)

6 — Power amplifier (phase sensitive rectifier and DC amplifier)

7 — Amplidyne

8 — Driving motor

9 — Tachometer

10 — Reduction gear

Card 4/4

APPROVED FOR RELEASE: 08/23/2000 CIA-RDP86-00513R001446620001-7"

"APPROVED FOR RELEASE: 08/23/2000 CIA-RDP86-00513R001446620001-7

L 10229-66

ACC NR: AP6002410 SOURCE CODE: UR/0105/64/000/010/0087/0087

AUTHOR: Basharin, A. V.; Belyakov, V. A.; Donskoy, A. V.; Neyman, L. P.; Ravdonik, V. S.; Renne, V. T.; Ruzin, Ya. L.; Sabinin, Yu. A.; Usov, S. V.

ORG: none

33
32
B

TITLE: Professor V. G. Drannikov (60th birthday and 35th anniversary of his scientific and pedagogical activity)

SOURCE: Elektrichestvo, no. 10, 1964, 87

TOPIC TAGS: electric engineering personnel, electric engineering

ABSTRACT: Vasiliy Gavrilovich Drannikov was born in Serpukhov on 30 June 1904 to a worker's family. He began as a textile worker at the "Proletariy" factory in 1920, transferring to the Textile Institute in the same year. In 1924 he was enrolled in the college of Electromechanics at the Leningrad Industrial Institute. In 1930 he became a candidate for an advanced degree and began his teaching career at the then newly organized Chair of "Elektroprivod" (Electric power drives). One of his first publications was the laboratory textbook "Opredeleniye poter'v transmissii" (Determination of transmission losses) in 1932. In 1931 he became an assistant and in 1934 a reader (docent) for the chair of "Promy*shlennoye ispol'zovaniye elektricheskoy energii" (Industrial uses of electric power). At that time he

Card 1/2 UDC: 621.3(092)

APPROVED FOR RELEASE: 08/23/2000 CIA-RDP86-00513R001446620001-7"

"APPROVED FOR RELEASE: 08/23/2000 CIA-RDP86-00513R001446620001-7

L 10229-66
ACC NR: AP6002410

became the first in the USSR to lecture on the "use of ionic-electronic devices in electric power drives." In 1939 Drannikov defended his dissertation "Teoreticheskoye i eksperimental'noye issledovaniye nekotory*kh skhem by* strogo vozbuzhdeniya generatora Leonarda" (Theoretical and experimental investigation of certain high-speed excitation circuits for a Leonard generator). During the war Drannikov was Chief Engineer at the Vologodskaya Oblast' Communal Economy Directorate in charge of electric power. Returning to Leningrad in 1944, he took an active part in reopening the Polytechnical Institute. From 1952 to 1955 he was abroad on teaching assignments. Since 1958 he has been dean of the Chair of "Elektroprivod i avtomatizatsiya promyshlenny*kh ustanovok" (Electric power drives and automation of industrial equipment). He has written 10 books, 12 texts, and many scientific papers on automation and electric drives. For his scientific and pedagogical activities he holds among other awards the "Znak pocheta" (Badge of Honor). Orig. art. has: 1 figure. [JPRS]

SUB CODE: 09 / SUBM DATE: none /

Card 2/2

APPROVED FOR RELEASE: 08/23/2000 CIA-RDP86-00513R001446620001-7"

"APPROVED FOR RELEASE: 08/23/2000 CIA-RDP86-00513R001446620001-7

SABININ, Yu.A., otv. red.; NIKOLAYEV, P.V., red.; RUDAKOV, V.V., red.; MYASNIKOV, V.A., red.; KULIKOV, S.N., red.

[Automated electric drives; servo systems, control, and converter devices] Avtomatizirovannyi elektroprivod; sledishchie sistemy, upravlenie i preobrazovatel'nye ustroistva. Moskva, Nauka, 1965. 172 p. (MIRA 18:5)

1. Leningrad. Institut elektromekhaniki.

APPROVED FOR RELEASE: 08/23/2000 CIA-RDP86-00513R001446620001-7"

"APPROVED FOR RELEASE: 08/23/2000 CIA-RDP86-00513R001446620001-7

L 4256-66 EWT(1) GS/GW

ACC NR: AT 5021835 UR/0000/65/000/000/0080/0087

AUTHOR: Nikolayev, P. V.; Rozhnova, I. P.; Sabinin, Yu. A.

TITLE: The possible utilization of the method of accumulation of weak electric signals in photoelectric slave systems for automatic telescope guidance

SOURCE: AN SSSR. Institut elektromekhaniki. Avtomatizirovannyy elektroprivod; sledyashchiye sistemy, upravleniye i preobrazovatel'nyye ustroystva (Automated electric drive; tracking systems, control and converter devices). Moscow, Izd-vo Nauka, 1965, 80-87

TOPIC TAGS: astronomic telescope, astrotracker, photoelectric method, photomultiplier, guidance system, servosystem

ABSTRACT: The existing photoelectric telescope guidance systems developed in the SSSR and abroad cannot fully satisfy the demands for weak astronomical object tracking. An analysis of the sensitivity of various instruments in operation shows that the automation of medium sized telescopes with optical guides having 150—200 mm apertures demands a reduction in sensitivity threshold of photoguides by 2 to 3 stellar magnitudes. This may be achieved either by developing more sensitive photomultipliers or by applying the method of accumulation of weak electric signals in photosensors. At the Krymskaya astrofizicheskaya observatoriya (Crimean Astrophysical Observatory) the personnel of the Institut elektromekhaniki (Institute of Electromechanics) carried out in 1963 an experimental study of the operation of an FEU-64 photomultiplier under conditions close to those found in automatic guide photosensors using half-disk modulators of light flux. The telescope controlled was an AZT-7 device with a 200 mm

Card 1/2

APPROVED FOR RELEASE: 08/23/2000 CIA-RDP86-00513R001446620001-7"

"APPROVED FOR RELEASE: 08/23/2000 CIA-RDP86-00513R001446620001-7

L 4256-66

ACC NR: AT 5021835

aperture and a focal length of 10 m. This article presents the theoretical basis for the photomultiplier operation, the design of the setup, and the results of tests showing that the sensitivity threshold can be lowered to the 2.5—3 level of stellar magnitude by the application of the accumulation method. Orig. art. has: 19 formulas, 2 figures, and 2 tables.

ASSOCIATION: None

SUBMITTED: 12Apr65 ENCL: 00 SUB CODE: AA, IE

NO REF SOV: 004 OTHER: 000

Card 2/2

APPROVED FOR RELEASE: 08/23/2000 CIA-RDP86-00513R001446620001-7"

"APPROVED FOR RELEASE: 08/23/2000 CIA-RDP86-00513R001446620001-7

L 4258-66 EWT(1)/T/EWA(h) IJP(c) AT/GS/GW

ACC NR: AT 5021837 UR/0000/65/000/000/0090/0100

AUTHOR: Karabash, Ye. D.; Loparev, R. N.; Nikolayev, P. V.; Popov, O. V.; Sabinin, Yu. A.

TITLE: Photoelectric slave systems for telescope control made of semiconductor and magnetic components

SOURCE: AN SSSR. Institut elektromekhaniki. Avtomatizirovannyy elektroprivod; sledyashchiye sistemy, upravleniye i preobrazovatel'nyye ustroystva (Automated electric drive; tracking systems, control and converter devices). Moscow, Izd-vo Nauka, 1965, 90-100.

TOPIC TAGS: servosystem, telescope, telescopic equipment, semiconductor device, magnetic circuit

ABSTRACT: After a brief description of photoelectric automatic telescope guidance systems which modulate the light flux by means of half-disk modulators, the authors present the functional diagram, the circuit diagram, and detailed description of the operation of an experimental photoelectric slave system made of semiconductors and magnetic components and used for telescope control. The selection of optimal operating parameters are discussed, the transient processes requiring a correcting loop for stabilization are analyzed, and theoretical estimates of the accuracy of the system are given. The fast determination of the correcting circuit parameters needed for a stable operation of the system is accomplished by electronic modeling. Orig. art. has: 37 formulas and 4 figures.

Card 1/2

APPROVED FOR RELEASE: 08/23/2000 CIA-RDP86-00513R001446620001-7"

"APPROVED FOR RELEASE: 08/23/2000 CIA-RDP86-00513R001446620001-7

L 4258-66

ACC NR: AT 5021837

ASSOCIATION: None

SUBMITTED: 12Apr65 ENCL: 00 SUB CODE: AA, IE

NO REF SOV: 004 OTHER: 000

Card 2/2 DP

APPROVED FOR RELEASE: 08/23/2000 CIA-RDP86-00513R001446620001-7"

"APPROVED FOR RELEASE: 08/23/2000 CIA-RDP86-00513R001446620001-7

L 14484-66 EWT(1) GS/GW

ACC NR: AT6003719 SOURCE CODE: UR/0000/65/000/000/0143/0149

AUTHORS: Kuteva, Z. N.; Sabinin, Yu. A.

ORG: Astronomical Committee, AN SSSR (Astronomicheskiy sovet AN SSSR)

TITLE: Systems for programmed control of telescopes

SOURCE: AN SSSR. Astronomicheskiy sovet. Opticheskaya nestabil'nost' zemnoy atmosfery (Optical instability of the earth's atmosphere). Moscow, Izd-vo Nauka, 1965, 143-149

TOPIC TAGS: stellar astronomy, astronomic telescope, automatic computer programming, atmospheric refraction

ABSTRACT: Systems of programmed automatic control of a telescope were developed and tested at the Institute of Electromechanics as a technical assignment of the Crimean Astrophysical Observatory. Observations were made on only a few stars in order to secure uninterrupted operation and accurate checking. The simplest technique for programming an equatorially mounted telescope was employed. The arrangement for introducing the equatorial coordinates into the computing circuit includes: 1) memory units for storing the constant equatorial coordinates of the small number of stars whose observation is to be programmed, 2) commutators for these coordinates, switching in the circuit for one or the other coordinate, and 3) a program unit to control the commutators and to select the proper star according to the program. Errors due to

Card 1/2

APPROVED FOR RELEASE: 08/23/2000 CIA-RDP86-00513R001446620001-7"

"APPROVED FOR RELEASE: 08/23/2000 CIA-RDP86-00513R001446620001-7

L 4259-66 EWT(1) GS/GW

ACC NR: AT5021838 UR/0000/65/000/000/0118/0128

67
63
B+1

AUTHOR: Myasnikov, V. A.; Sabinin, Yu. A.
55 55

TITLE: The present status and future prospects for the development of discrete systems for astronomic instrument control

SOURCE: AN SSSR. Institut elektromekhaniki. Avtomatizirovannyy elektroprivod; sledyashchiye sistemy, upravleniye i preobrazovatel'nyye ustroystva (Automated electric drive; tracking systems, control and converter devices). Moscow, Izd-vo Nauka, 1965, 118-128

TOPIC TAGS: astronomy, digital system, automatic control system, electric motor, control system design, digital computer, computer control system

ABSTRACT: After a brief survey of the existing digital systems in the Soviet Union and abroad, the present authors discuss problems encountered at the laboratory of digital systems of the Institut Elektromekhaniki (Institute of Electromechanics) in the design of automated electric motors for the control of azimuthal instruments. These problems are concerned with 1) the realization of high quality dynamic parameters required in such systems; 2) the determination of the necessary period of time quantization in digital automatic control systems; 3) the decrease of parameter calculation repetition frequency in digital automatic control systems; 4) the selection of the most appropriate digital computer; and 5) the selection of accurate angle-to-digit converters. The authors present specific recommendations and briefly describe devices and setups they used during their investigations. Part of the theoretical derivations found in the article are due to "the co-workers of the IEM V. P. Gorbunov, S. V.

Card 1/2

APPROVED FOR RELEASE: 08/23/2000 CIA-RDP86-00513R001446620001-7"

"APPROVED FOR RELEASE: 08/23/2000 CIA-RDP86-00513R001446620001-7

L 4259-66

ACC NR: AT5021838

4

Korotov, and B. A. Shishkov." Orig. art. has: 15 formulas and 4 figures.

ASSOCIATION: None

SUBMITTED: 12Apr65 ENCL: 00 SUB CODE: AA, IE

NO REF SOV: 013 OTHER: 005

Card 2/2 DP

APPROVED FOR RELEASE: 08/23/2000 CIA-RDP86-00513R001446620001-7"

"APPROVED FOR RELEASE: 08/23/2000 CIA-RDP86-00513R001446620001-7

L 04431-67

ACC NR: AP6014222 SOURCE CODE: UR/0115/66/000/003/0005/0008

44
B

AUTHOR: Kalantayev, F. P.; Babichev, A. P.; Myasnikov, V. A.; Sabinin, Yu. A.; Tarasenko, Ye. V.

ORG: none

TITLE: Using Hall generators in computing devices intended for automatic systems

SOURCE: Izmeritel'naya tekhnika, no. 3, 1966, 5-8

TOPIC TAGS: Hall generator, analog computer

ABSTRACT: The fundamental shortcomings of widely used sine-cosine rotary transformers are: slip rings and brushes, high cost, complexity, inapplicability of dc and rf. Hence, an idea is suggested which would involve two Hall generators placed at right angles to each other in a magnetic field produced by the poles of an

Card 1/2 UDC: 681.142.64

APPROVED FOR RELEASE: 08/23/2000 CIA-RDP86-00513R001446620001-7"

"APPROVED FOR RELEASE: 08/23/2000 CIA-RDP86-00513R001446620001-7

L 04431-67

ACC NR: AP6014222

(electro)magnet. Three Hall generators shifted in space by 120° might serve as a synchro. By using a movable permanent magnet, a windingless and contactless design would be possible. Theoretical considerations re such a design, including formulas, pole-piece shapes, and error evaluation are set forth. A device based on these theoretical considerations "is being created at the present time." Orig. art. has: 4 figures and 11 formulas.

SUB CODE: 09 / SUBM DATE: none / ORIG REF: 002 / OTH REF: 001

awm

Card 2/2

APPROVED FOR RELEASE: 08/23/2000 CIA-RDP86-00513R001446620001-7"

"APPROVED FOR RELEASE: 08/23/2000 CIA-RDP86-00513R001446620001-7

SOURCE CODE: UR/0271/66/000/009/A066/A066

ACC NR: AR6035364

AUTHOR: Sabinin, Yu. A.; Mikolayev, P. V.; Popov, O. V.; Loparev, R. N.; Karabash, Ye. D.

TITLE: Photoelectric servomechanism systems for automatic tracking

SOURCE: Ref. zh. Avtomatika, telemekhanika i vychislitel'naya tekhnika, Abs. 9A460

REF SOURCE: Sb. Avtomatizir. elektroprivod. proizv. mekhanizmov. T. 1. M.-L., 1965, 194-200

TOPIC TAGS: servomechanism system, star tracker, photoelectric tracking, tracking control, ~~astrophysics instrument~~, light modulator, astronomic telescope, tracking telescope, photomultiplier / FEU-64 photomultiplier

ABSTRACT: The authors present the operating principle and the characteristics of a light-flux modulator for a modern astrotelescope. It is noted that the use of a light-flux modulator and a photomultiplier of the FEU-64 type ensures stable tracking of stars of ninth - tenth magnitude. In order to ensure constancy of the error signal for identical displacements from the optical exes of stars of different magnitude, use is made of the so-called derivative control of the system. In this case the system maintains a constant average photomultiplier current independently of the brightness of the star. The functional diagram of the system of photoelectric tracking by the telescope is considered, and the possibility of its analysis by method of mathematical simulation is discussed. It is indicated that the developed tracking systems are being introduced in the observatories of AN SSSR, thus greatly facilitating the labor

UDC: 62-5: 629.13: 621.396.988

Card 1/2

APPROVED FOR RELEASE: 08/23/2000 CIA-RDP86-00513R001446620001-7"

"APPROVED FOR RELEASE: 08/23/2000 CIA-RDP86-00513R001446620001-7

ACC NR: AR6035558 SOURCE CODE: UR/0269/66/000/010/0080/0080

AUTHOR: Korotkov, S. V.; Myasnikov, V. A.; Sabinin, Yu. A.

TITLE: Principles of designing digital control systems for astronomical instruments

SOURCE: Ref. zh. Astronomiya, Abs. 10.51.599

REF SOURCE: Sb. Avtomatizir. elektroprivod proizv. mekhanizmov. T. 1. M.-L., 1965, 188-194

TOPIC TAGS: digital converter, digital computer, digital system, astronomic instrument, digital control system

ABSTRACT: Some questions of principle pertaining to the design of a digital servodrive for azimuthal instruments are studies. The digital control system contains a computer for converting equatorial coordinates into azimuthal ones, true position pick-ups for instrument axes in space, and a drive along the azimuth and zenith distance axes, which is controlled by the computer. The system should provide a total accuracy of no less than 10. Bibliography contains 9 titles. [Translation of abstract] [DW]

Card 1/1 SUB CODE: 03, 09/ UDC: 62-52:522.2

APPROVED FOR RELEASE: 08/23/2000 CIA-RDP86-00513R001446620001-7"

"APPROVED FOR RELEASE: 08/23/2000 CIA-RDP86-00513R001446620001-7

ACC NR: AR7002214 SOURCE CODE: UR/0271/66/000/010/A035/A035

AUTHOR: Korotkov, S. V.; Myasnikov, V. A.; Sabinin, Yu. A.

TITLE: Principles in the design of digital control systems for astronomical instruments

SOURCE: Ref. zh. Avtomatika, telemekhanika i vychislitel'naya tekhnika, Abs. 10A257

REF SOURCE: Sb. Avtomatizir. elektroprivod proizv. mekhanizmov, T. I. M.-L., 1965, 188-194

TOPIC TAGS: astrophysic instrument, servomechanism, digital computer system, space coordinate system, geodesy

ABSTRACT: An analysis is made of theoretical problems in the design of digital servodrive for azimuthal instruments. The system includes a computer for the conversion of equatorial into azimuthal coordinates, a transmitter for indicating the true position of the instrument's axes in space, and an adjusting mechanism for the azimuthal and zenithal positions controlled by the computer. With a

UDC: 62-55

Card 1/2

APPROVED FOR RELEASE: 08/23/2000 CIA-RDP86-00513R001446620001-7"

"APPROVED FOR RELEASE: 08/23/2000 CIA-RDP86-00513R001446620001-7

ACC NR: AR7002214

Q factor of 100, the system must insure a fluctuation index of M-1 and overall accuracy >10". Recommendations are made, on the basis of the analysis, for a method of determining the time quantum period for the automatic control system and for simplified design and engineering formulas are proposed. A description is given of a complex dual-motion drive system, using an integrating differential gear, which provides consistent velocity control within a wide range. A method is also proposed for reducing the number of leveling and calculating operations for this control system. The text includes 4 illustrations and 9 bibliographic references. [Translation of abstract] [KP]

SUB CODE: 03,09/

Card 2/2

APPROVED FOR RELEASE: 08/23/2000 CIA-RDP86-00513R001446620001-7"

"APPROVED FOR RELEASE: 08/23/2000 CIA-RDP86-00513R001446620001-7

SABININA, I. G.

"Some Agrohydrological Peculiarities of Soils of the Bogar Zone of Central Asia," Pedology, No. 7, 1943.

APPROVED FOR RELEASE: 08/23/2000 CIA-RDP86-00513R001446620001-7"

"APPROVED FOR RELEASE: 08/23/2000 CIA-RDP86-00513R001446620001-7

SABININA, I.G.

"The Dynamics Governing Gathering the Potato Harvest in Connection With the Temperature Regime and S oil Moisture."

SO: "Agrometeorology." No 3(4), 1949, page 38.

APPROVED FOR RELEASE: 08/23/2000 CIA-RDP86-00513R001446620001-7"

"APPROVED FOR RELEASE: 08/23/2000 CIA-RDP86-00513R001446620001-7

SABININA, I.G.

"Some Results of Observations During the Gathe ing of the Sugar-Beet crop on Connection Withthe Meteorological Conditions of Uzbekistan."

SO: "Agrometeorology." No 3(4), 1949, page 53.

APPROVED FOR RELEASE: 08/23/2000 CIA-RDP86-00513R001446620001-7"

"APPROVED FOR RELEASE: 08/23/2000 CIA-RDP86-00513R001446620001-7

[illegible], I.G.

Influence of the temperature factor on the development of first leaves of the mulberry tree during the spring season in Uzbekistan. Trudy Tash. no.37:20-26 '54. (MLRA 8:6)

1. Upravlenive gidrometeorologicheskoy sluzhby Uzbekskoy SSR.
(Uzbekistan--Mulberry)

APPROVED FOR RELEASE: 08/23/2000 CIA-RDP86-00513R001446620001-7"

"APPROVED FOR RELEASE: 08/23/2000 CIA-RDP86-00513R001446620001-7

BALASHEVA, Ye.N.; SABININA, I.G.; SEMENOVA, O.A.

Climatological description of the Kyzyl Kum. Sbor.rab. TGO no.1:5-69 '61. (MIRA 15:10)
(Kyzyl Kum--Climate)

APPROVED FOR RELEASE: 08/23/2000 CIA-RDP86-00513R001446620001-7"

"APPROVED FOR RELEASE: 08/23/2000 CIA-RDP86-00513R001446620001-7

KOTYSHEVA, M.M.; SABININA, I.G.

Features of the agricultrual hydrology of the soil in the main cotton-growing areas of Uzbekistan. Sbor.rab. TGO no.1:102-120 '61. (MIRA 15:10)

(Uzbekistan--Soil moisture)

APPROVED FOR RELEASE: 08/23/2000 CIA-RDP86-00513R001446620001-7"

"APPROVED FOR RELEASE: 08/23/2000 CIA-RDP86-00513R001446620001-7

SABININA, I.G.

Methodology of calculating the beginning of the main phases in the development of corn under irrigation farming conditions in the Uzbek S.S.R. Sbor.rab. TGO no.1:121-132 '61. (MIRA 15:10)

(Uzbekistan--Corn (Maize))

APPROVED FOR RELEASE: 08/23/2000 CIA-RDP86-00513R001446620001-7"

"APPROVED FOR RELEASE: 08/23/2000 CIA-RDP86-00513R001446620001-7

SABININA, I.G.

Duration of the period from seeding till sprouting of cotton as related to the air temperature and soil moisture in the Uzbek S.S.R. Meteor. i gidrol. no.8:35-38 Ag '61. (MIRA 14:7)
(Uzbekistan--Cotton growing) (Meteorology, Agricultural)

APPROVED FOR RELEASE: 08/23/2000 CIA-RDP86-00513R001446620001-7"

"APPROVED FOR RELEASE: 08/23/2000 CIA-RDP86-00513R001446620001-7

BALASHEVA, Yelena Nikolayevna; KARAUL'SHCHIKOVA, Nina Nikolayevna; SABININA Irina Georgiyevna; SEMENOVA, Ol'ga Aleksandrovna; KOZIK, S.M., red.; VAYTSMAN, A.I., red.; SERGEYEV, A.N., tekhn. red.

[Climatological description of Surkhan-Darya Province]Klimaticheskoe opisanie Surkhan-Dar'ianskoi oblasti. [By]E.N. Balasheva i dr. Leningrad, Gidrometeoizdat, 1962. 114 p. (MIRA 15:10)

(Surkhan-Darya Province--Climate)

APPROVED FOR RELEASE: 08/23/2000 CIA-RDP86-00513R001446620001-7"

"APPROVED FOR RELEASE: 08/23/2000 CIA-RDP86-00513R001446620001-7

SABININA, I.G.

Determining the temperature indices for the development of vegetable and vine crops under the conditions of irrigation farming in the Uzbek S.S.R. Nauch. trudy TashGU no.193: 68-77 '62. (MIRA 16:7)

(Uzbekistan—Crops and climate)

APPROVED FOR RELEASE: 08/23/2000 CIA-RDP86-00513R001446620001-7"

"APPROVED FOR RELEASE: 08/23/2000 CIA-RDP86-00513R001446620001-7

SABININA, I.G.; KARAUL'SHCHIKOVA, N.N.; POSLAVSKAYA, O.Yu.; GRANITOV, I.I.; KOGAY, N.A.

Leonid Nikolaevich Babushkin; on his 60th birthday. Izv.Uzb.fil. Geog.ob-va 6:187-189 '62. (MIRA 15:8)
(Babushkin, Leonid Nikolaevich, 1902-)

APPROVED FOR RELEASE: 08/23/2000 CIA-RDP86-00513R001446620001-7"

"APPROVED FOR RELEASE: 08/23/2000 CIA-RDP86-00513R001446620001-7

ZHITOMIRSKAYA, O.M.; SABININA, I.G.; SEMENOVA, O.A., otv. red.; LIVSHITS, B.Ye., red.; NIKOLAYEVA, G.S., tekhn. red.

[Climatic description of the Usturt] Klimaticheskoe opisanie Ustiurta. Leningrad, Gidrometeoizdat, 1963. 57 p. (MIRA 16:11)

(Usturt--Climate)

APPROVED FOR RELEASE: 08/23/2000 CIA-RDP86-00513R001446620001-7"

"APPROVED FOR RELEASE: 08/23/2000 CIA-RDP86-00513R001446620001-7

SABININA, I.G.; KARAUL'SHCHIKOVA, N.N.

Leonid Nikolaevich Babushkin; on his 60th birthday. Meteor. i gidrol. no.7:69 Jl '62. (MIRA 15:6)
(Babushkin, Leonid Nikolaevich, 1902-)

APPROVED FOR RELEASE: 08/23/2000 CIA-RDP86-00513R001446620001-7"

"APPROVED FOR RELEASE: 08/23/2000 CIA-RDP86-00513R001446620001-7

SABININA, I.G.; OSOKINA, R.I.

Temperature indices of the development of lucerne under conditions of irrigation farming in the Uzbek S.S.R. Trudy Sred.-Az. nauch.-issl. gidrometeor. inst. no.12:34-42 '62. (MIRA 16:5)
(Uzbekistan--Alfalfa) Plants, Effect of temperature on)
(Irrigation farming)

APPROVED FOR RELEASE: 08/23/2000 CIA-RDP86-00513R001446620001-7"

"APPROVED FOR RELEASE: 08/23/2000 CIA-RDP86-00513R001446620001-7

ZHITOMIRSKAYA, O.M.; SABININA, I.G.; SEMENOVA, O.A., otv. red.; LIVSHITS, B.Ye., red.; NIKOLAYEVA, G.S., tekhn. red.

[Climatic description of the Ust-Urt] Klimaticheskoe opisanie Ustiurta. Leningrad, Gidrometeoizdat, 1963. 57 p. (MIRA 16:8)

(Ust-Urt--Climate)

APPROVED FOR RELEASE: 08/23/2000 CIA-RDP86-00513R001446620001-7"

"APPROVED FOR RELEASE: 08/23/2000 CIA-RDP86-00513R001446620001-7

BALASHEVA, Yelena Nikolayevna; ZHITOMIRSKAYA, Ol'ga Moiseyevna; KARAUL'SHCHIKOVA, Nina Nikolayevna; SABININA, Irina Georgiyevna; SEMENOVA, O.A., red.; VAYTSMAN, A.I., red.; NIKOLAYEVA, G.S., tekhn. red.

[Climatic description of the Zeravshan Range region] Klimaticheskoe opisanie Zeravshanskogo raiona. [By] E.N.Balasheva i dr. Leningrad, Gidrometeoizdat, 1963. 118 p. (MIRA 16:8)

(Zeravshan Range region—Climate)

APPROVED FOR RELEASE: 08/23/2000 CIA-RDP86-00513R001446620001-7"

"APPROVED FOR RELEASE: 08/23/2000 CIA-RDP86-00513R001446620001-7

SABININA, I.G.

Dynamics of the growth of the second and third year of alfalfa before the first cut in relation to the air temperature in Uzbekistan. Trudy Sred.-Az.nauch.-issl.gidrometeor.inst. no.16:85-88 '63. (MIRA 17:6)

APPROVED FOR RELEASE: 08/23/2000 CIA-RDP86-00513R001446620001-7"

"APPROVED FOR RELEASE: 08/23/2000 CIA-RDP86-00513R001446620001-7

SABININA, L.N.

Evaluation of the conditions of the moisture consumption by the cotton plant in the vegetation period under the conditions of irrigation farming in Uzbekistan. Trudy Sred.-Az. nauch.-issl. gidrometeor. inst. no.24(35-41) '65. (MIRA 18:10)

APPROVED FOR RELEASE: 08/23/2000 CIA-RDP86-00513R001446620001-7"

"APPROVED FOR RELEASE: 08/23/2000 CIA-RDP86-00513R001446620001-7

1ST AND 2ND ORDERS

3RD AND 4TH ORDERS

PROCESSES AND PROPERTIES INDEX

BC

a-1

Conductivity and viscosity of aqueous glycerol solutions of sulphuric acid. L. R. SABININA (J. Gen. Chem. Russ., [illegible]). With increasing concn. of H_2SO_4 and of glycerol the viscosity diminishes more rapidly than the mol. conductivity; this is attributed to desolvation of the ions in the more conc. solutions. The temp. coeff. of the conductivity falls with rise of temp. R. T.

COMMON ELEMENTS

COMMON VARIABLES INDEX

MATERIALS INDEX

OPEN

ASM-SLA METALLURGICAL LITERATURE CLASSIFICATION

MATERIALS INDEX

AUTHOR INDEX

1ST AND 2ND LETTER

3RD AND 4TH ORDERS

APPROVED FOR RELEASE: 08/23/2000 CIA-RDP86-00513R001446620001-7"

"APPROVED FOR RELEASE: 08/23/2000 CIA-RDP86-00513R001446620001-7

CA

4

Electrochemistry of other solutions. XI. Viscosity of the system: sulfuric acid-ethyl ether. L. Sabinina. *J. Gen. Chem.* (U.S.S.R.) 3, 87-90(1933); cf. *C. A.* 27, 2366.—By analogy with H_2O the mixts. of Et_2O and H_2SO_4 show high elec. cond. (Plotnikov) and form the compds. $H_2SO_4.Et_2O$ and $H_2SO_4.2Et_2O$, whereby the thermal effect of the formation of the monoetherate is equal to that of monohydrate (Chelintsev and Kozlov, *C. A.* 9, 1749). The viscosities of mixts. of different proportions of abs. Et_2O and 100% H_2SO_4 were detd. at 0°, 10°, 20° and 30° in the Ostwald viscometer. The tabulated results show that with the increasing addn. of Et_2O to H_2SO_4 the viscosity at first sharply drops, then gradually rises, reaching at 63% the value obtained at 92% H_2SO_4 and finally drops again, while the d. continuously decreases. Thus also in relation to viscosity the systems H_2SO_4-Et_2O and H_2SO_4-H_2O act analogously. Chas. Blanc

APPROVED FOR RELEASE: 08/23/2000 CIA-RDP86-00513R001446620001-7"

"APPROVED FOR RELEASE: 08/23/2000 CIA-RDP86-00513R001446620001-7

PROCESSES AND PROPERTIES INDEX

*On the Dissolution of Metallic [Zinc] Single Crystals. L. E. Salinina and L. A. Polonskaja (*Zhurnal Fizicheskoy Khimii* (*J. Phys. Chem.*), 1934, 8, (7), 946–953).—[In Russian.] Potential-time curves have been obtained in 0·1*N* and in *N*-sulphuric acid for the polycrystalline metal and for single crystals cut parallel to the basal plane. The differences between the curves are related to the surface structure of the specimens, that for the single crystal showing the existence of a well-defined period of induction. The dissolution of single crystal zinc is attributed to the presence of atoms of other metals in the space-lattice.—N. A.

ASM-SLA METALLURGICAL LITERATURE CLASSIFICATION

APPROVED FOR RELEASE: 08/23/2000 CIA-RDP86-00513R001446620001-7"

"APPROVED FOR RELEASE: 08/23/2000 CIA-RDP86-00513R001446620001-7

1ST AND 2ND ORDERS

PROCESSES AND PROPERTIES INDEX

3RD AND 4TH ORDERS

BC

a-1

Surface tension of the system sulphuric acid-water. L. E. [illegible] and L. I. Terpugov (J. Gen. Chem. Russ., [illegible], 5, 783—787).—The temp. coeff. of surface tension-composition curves (10—50°) exhibits a [illegible] corresponding with $H_2SO_4.2H_2O$. The max. deviation from the additive rule for σ is found for the same [illegible]. R. T.

ASM-SLA METALLURGICAL LITERATURE CLASSIFICATION

APPROVED FOR RELEASE: 08/23/2000 CIA-RDP86-00513R001446620001-7"

"APPROVED FOR RELEASE: 08/23/2000 CIA-RDP86-00513R001446620001-7

1ST AND 2ND ORDERS

PROCESSES AND PROPERTIES INDEX

BC

Diffusion of hydrogen through metallic cathodes. L. E. SABININA and L. A. POLONSKAJA (J. Phys. Chem. U.S.S.R., 1935, 6, 107—113).—The rate of diffusion was measured by the change of pressure in a hollow Fe cylinder, previously evacuated and then subjected to electrolytic polarisation in 1N- and 0·1N-H_2SO_4 solutions. Addition of 0·001 g.-mol. of the oxides of K, Sn, Pb, Hg, and Pd per litre of solution was found to change the rate of diffusion. (Ch. Abs. (r)

ASM-SLA METALLURGICAL LITERATURE CLASSIFICATION

APPROVED FOR RELEASE: 08/23/2000 CIA-RDP86-00513R001446620001-7"

"APPROVED FOR RELEASE: 08/23/2000 CIA-RDP86-00513R001446620001-7

Rate of mutual interaction of aqueous and ethereal solutions of sulfuric acid with zinc. L. E. Sabinina. *J. Phys. Chem.* (U. S. S. R.) 8, 165-80(1936).—The mol. percentage concns. of H_2SO_4 and elec. conductivities of the system H_2SO_4–H_2O are 100, 25.4; 77.8, 216.5; 34.7, 242.0; 35.5, 227.7; 21.5, 233; 10.9, 188; 5.8, 129; 0.97, 22.8. Corr. values for the system H_2SO_4–Et_2O are 92.8, 145.4; 92.4, 150.6; 78.5, 90.8; 54.4, 23.3; 34.8, 0.48; 22.2, 0.036. The rates of reaction of various concns. of H_2SO_4 in H_2O and in Et_2O with Zn dust are shown by a series of graphs. The max. of the curves for the initial rate of reaction with Zn dust lies at the same points as for the elec. cond.; i. e. at about 20 and 55 mols. % acid with H_2O (2 max.) and at 92.5% acid with ether. F. H. R.

ASM-SLA METALLURGICAL LITERATURE CLASSIFICATION

APPROVED FOR RELEASE: 08/23/2000 CIA-RDP86-00513R001446620001-7"

"APPROVED FOR RELEASE: 08/23/2000 CIA-RDP86-00513R001446620001-7

1ST AND 2ND ORDERS

PROCESSES AND PROPERTIES INDEX

4

The Influence of Certain Ions on the Acid Corrosion of Nickel and Iron. L. E. Sabinina and L. A. Polonskaia (*Zhurnal Prikladnoi Khimii* (*J. Applied Chem.*), 1936, **9**, (8), 1405-1415; *Brit. Chem. Abs.*, **1937**, [B], 144).—[In Russian.] The corrosion of iron or nickel in 0·1*N*- and *N*-sulphuric acid, and in 0·1*N* acetic acid is enhanced by cadmium and inhibited by mercury and lead salts. In particular, the corrosion of nickel is completely inhibited by 0·00004*M* mercuric sulphate.—S. G.

ASM-SLA METALLURGICAL LITERATURE CLASSIFICATION

APPROVED FOR RELEASE: 08/23/2000 CIA-RDP86-00513R001446620001-7"

"APPROVED FOR RELEASE: 08/23/2000 CIA-RDP86-00513R001446620001-7

PROCESSES AND PROPERTIES INDEX

The decomposition of wood under pyrite mining conditions. L. E. Sabinina and A. I. Baranova. *Bezopasnost Truda v Gornol Prom.* 1938, No. 1, 27-33; *Khim. Referat. Zhur.* 1, No. 7, 133-4(1938).—The velocity of hydrolysis of wood by H_2SO_4 solns. and some sulfates contained in mine water was investigated. Sawdust was treated at 40° with solns. of 0.3 *N* H_2SO_4, and of 0.3 *N* H_2SO_4 with the addn. of $Fe_2(SO_4)_3$ in the pure state and together with hydrolysis products. The accumulation of hydrolysis products affects the velocity of hydrolysis less than does the destruction of the easily hydrolyzed parts of the wood. Prevention of the oxidation of the hydrolysis products by air had very little effect on the results. The velocity of hydrolysis increases with the temp. (the wood material disintegrates at 60° in the mine); it is almost doubled by the addn. of 11 g. per l. of $Fe_2(SO_4)_3$ to a 0.3 *N* H_2SO_4 as compared with a pure 0.3 *N* H_2SO_4. It increases 25% with an increase of $Fe_2(SO_4)_3$ from 6 to 11 g. per l. The effect of Mg salts is slightly less than that of Fe salts. For the investigation of the isothermic reactions in wood materials at temp. below 100° an adiabatic calorimeter of the type of Miagava was used, and for temp. above 100° an adiabatic oven was used which has been constructed for the internal heating of the Cu pyrites. At temps. below 100° the internal heating of the sawdust is small; it increases above 100°, and at 163-8° it increases so rapidly that it leads to a spontaneous combustion. The temp. of spontaneous combustion of sawdust is lowered by acid treatment. W. R. Henn

ASM-SLA METALLURGICAL LITERATURE CLASSIFICATION

APPROVED FOR RELEASE: 08/23/2000 CIA-RDP86-00513R001446620001-7"

"APPROVED FOR RELEASE: 08/23/2000 CIA-RDP86-00513R001446620001-7

1ST AND 2ND ORDERS

3RD AND 4TH ORDERS

PROCESSES AND PROPERTIES INDEX

CA

7

Photonephelometric determination of chloride impurities in alkali chromate and dichromate reagents. L. E. Sabinina and L. I. Rozengard. *Zavodskaya Lab.* 7, 727-9 (1938).—A photoelec. app. with 1 Se cell, a needle galvanometer sensitive to 10^{-7} amp. and a soln. of 15 g. salt to be tested in 120 ml. H_2O + 30 ml. HNO_3 are used. The galvanometer readings are taken at a definite light intensity of the soln. before and after each of the successive addns. of 2 ml. of 0.1 *N* $AgNO_3$ and 1 ml. of titrated NaCl soln. The results are calcd. by the formula: percentage of Cl = $T(N_1 - N_2)100/(N_2 - N_3)P$, where N_1, N_2 and N_3 are the 3 successive galvanometer readings, T is the titer of NaCl in Cl^- and P is the wt. of sample.

Chas. Blanc

ASM-SLA METALLURGICAL LITERATURE CLASSIFICATION

APPROVED FOR RELEASE: 08/23/2000 CIA-RDP86-00513R001446620001-7"

"APPROVED FOR RELEASE: 08/23/2000 CIA-RDP86-00513R001446620001-7

1ST AND 2ND ORDERS

PROCESSES AND PROPERTIES INDEX

3RD AND 4TH ORDERS

18

CA

Potentiometric control in the production of pure ammonium dichromate. L. E. Sabinina, A. A. Babalova and L. V. Golovko. *Zavodskaya Lab.* 7, 1355-60(1938).—In the production of pure $(NH_4)_2Cr_2O_7$ from com. CrO_3 and NH_4OH, the neutralization is controlled potentiometrically with the PbO_2 and Ag electrodes. The neutralized soln. is then heated at 50-60° and filtered from the contaminating Cr_2O_3, Fe_2O_3 and Al_2O_3. The impurities can be best sepd. from $(NH_4)_2Cr_2O_7$ at pH = 5.1 or 5.5. Chas. Blanc

COMMON ELEMENTS

COMMON VARIABLES INDEX

OPEN

MATERIALS INDEX

ASM-SLA METALLURGICAL LITERATURE CLASSIFICATION

1ST AND 2ND LETTER

AUTHOR INDEX

APPROVED FOR RELEASE: 08/23/2000 CIA-RDP86-00513R001446620001-7"

"APPROVED FOR RELEASE: 08/23/2000 CIA-RDP86-00513R001446620001-7

Determination of free alkali in potassium chromate. L. K. Sabinina and A. A. Babalova (*Zavod. Lab.*, 1939, 8, 413—416).—Solutions of pure K_2CrO_4 have pH ~9·8. The alkali in less pure samples can be determined by acidifying the solution and titrating it, using a PbO_2 or a glass electrode. J. J. B.

APPROVED FOR RELEASE: 08/23/2000 CIA-RDP86-00513R001446620001-7"

"APPROVED FOR RELEASE: 08/23/2000 CIA-RDP86-00513R001446620001-7

Rapid determination of sulfate in the presence of large amounts of chromate. A. A. Babalova, L. E. Sabinina and P. S. Pil'nik. *Zavodskaya Lab.* 8, 911-13(1939).—The method is applicable to solns. where the sulfate content is approx. known. A definite amt. of titrated $BaCl_2$ soln. in alc. is added to the unknown soln., the ppt. of $BaSO_4$ and $BaCrO_4$ is filtered through a Schott filter, the $BaCrO_4$ is dissolved in HCl, and the CrO_4 is detd. by a conventional method. The sulfate is calcd. from the amt. of $BaCl_2$ added and $BaCrO_4$ formed. Analysis takes 2-2.5 hrs.

B. Z. Kamich

ASM-SLA METALLURGICAL LITERATURE CLASSIFICATION

APPROVED FOR RELEASE: 08/23/2000 CIA-RDP86-00513R001446620001-7"

"APPROVED FOR RELEASE: 08/23/2000 CIA-RDP86-00513R001446620001-7

1ST AND 2ND ORDERS

3RD AND 4TH ORDERS

PROCESSES AND PROPERTIES INDEX

BC

A 1

Potentiometric control of conversion of chromates into dichromates. L. E. SABIKINA and A. K. MORALEV (J. Appl. Chem. Russ., 1939, **12**, 301—308).—The p_H of 0·07M-$K_2Cr_2O_7$ is 4·18 (glass electrode). Conversion of K_2CrO_4 into $K_2Cr_2O_7$ (by addition of H_2SO_4) has been followed potentiometrically (indicator electrode Pb–PbO_2 in aq. $K_2Cr_2O_7$ at p_H 4·18, against a similar electrode in the test solution).

R. T.

ASM-SLA METALLURGICAL LITERATURE CLASSIFICATION

APPROVED FOR RELEASE: 08/23/2000 CIA-RDP86-00513R001446620001-7"

"APPROVED FOR RELEASE: 08/23/2000 CIA-RDP86-00513R001446620001-7

1ST AND 2ND ORDERS

PROCESSES AND PROPERTIES INDEX

3RD AND 4TH ORDERS

CA

7

A rapid method for determining aluminum in the presence of chromates. L. E. Sabinina and E. I. Kuminova. *Zavodskaya Lab.* 9, No. 1, 38-43(1940).—For detn. of a few hundredths of a mg. of Al in samples contg. 1.0-2.4 g. of chromate, S. and K. recommend the aluminum method of Voe and Hill (*C. A.* 21, 3854) modified in regard to the quantities of reagents. The measurements are made in a photocolorimeter with a Se photoelement. The error does not exceed 10-11%; the time of the detn. is 25 min. Al in amts. of several mg. in the presence of chromate can be detd. in the form of a turbidity of $Al(OH)_3$, which is produced on acidifying the chromate soln. When a calibration curve is used the error does not exceed 8%. The mean error is considerably smaller. The time required for the detn. is 15 min. Nine references. W. R. Henn

ASM-SLA METALLURGICAL LITERATURE CLASSIFICATION

MATERIALS INDEX

2ND AND 4TH ORDERS

2ND LETTER

AUTHOR INDEX

1ST AND 2ND LETTER

APPROVED FOR RELEASE: 08/23/2000 CIA-RDP86-00513R001446620001-7"

"APPROVED FOR RELEASE: 08/23/2000 CIA-RDP86-00513R001446620001-7

PROCESSES AND PROPERTIES INDEX

15

Determination of Boron in Ferroboron. (In Russian.) L. E. Sabinina and T. V. Stiunkel. *Factory Laboratory* (U.S.S.R.), v. 13, June 1947, p. 752-753.

After a short review of the different methods described in the literature, a volumetric method using $Ba(OH)_2$ is fully described, together with typical results.

ASM-SLA METALLURGICAL LITERATURE CLASSIFICATION

APPROVED FOR RELEASE: 08/23/2000 CIA-RDP86-00513R001446620001-7"

"APPROVED FOR RELEASE: 08/23/2000 CIA-RDP86-00513R001446620001-7

SABININA, L. YE. PA 43/49T14

USSR/Chemistry - Rhodamine Apr 49
Chemistry - Antimony

"Quantitative Determination of Antimony by Rhodamine B," L. Ye. Sabinina, A. P. Zolotukhina, Ural Polytech Inst, 4 pp

"Zavod Lab" Vol XV, No 4

Suggested method to determine antimony differs from Fredrik's method in acidity of medium in which complex forms, in final acidity, and in choice of acid. Instead of water-alcohol mixtures, suggests colorimetric analysis of antimony-rhodamine complex. Studied influence of various ions on formation of antimony-rhodamine complex.

[redacted] 43/49T14

APPROVED FOR RELEASE: 08/23/2000 CIA-RDP86-00513R001446620001-7"

"APPROVED FOR RELEASE: 08/23/2000 CIA-RDP86-00513R001446620001-7

SAFIULLA, R. S.

"Dependence of Lymph Flow on Blood Pressure and Respiration and the Mutual Interdependence of Their Regulation." Cand Biol Sci, Alma-Ata Zooveterinary Inst; Inst of Physiology, Acad Sci Kazakh SSR, Alma-Ata, 1954. (RZhBiol, No 6, Mar 55)

SO: Sum. No. 670, 29 Sep 55--Survey of Scientific and Technical Dissertations Defended at USSR Higher Educational Institutions (15)

APPROVED FOR RELEASE: 08/23/2000 CIA-RDP86-00513R001446620001-7"

"APPROVED FOR RELEASE: 08/23/2000 CIA-RDP86-00513R001446620001-7

SABININA, R.S.

Dependence of lymph flow on blood pressure and respiration and their mutually conditioned regulation. Trudy Vses. ob-va fiziol., biokhim. i farm. 4:85-90 '58. (MIRA 14:2)

1. Institut fiziologii AN KazSSR. Direktor instituta prof. A.P. Polosukhin.
(LYMPHATICS) (BLOOD PRESSURE) (RESPIRATION)

APPROVED FOR RELEASE: 08/23/2000 CIA-RDP86-00513R001446620001-7"

"APPROVED FOR RELEASE: 08/23/2000 CIA-RDP86-00513R001446620001-7

LEBEDEV, G.V.; SABININA, Ye.D.; CHUCHKIN, V.G.

State of water in the plant cell. Mobility of colloidal and crystal water. Fiziol. rast. 10 no.1:108-110 Ja-F '63. (MIRA 16:5)

1. K.A.Timiriazev Institute of Plant Physiology, U.S.S.R. Academy of Sciences, Moscow.
(Plant cells and tissues)
(Plants—Water requirements)

APPROVED FOR RELEASE: 08/23/2000 CIA-RDP86-00513R001446620001-7"

"APPROVED FOR RELEASE: 08/23/2000 CIA-RDP86-00513R001446620001-7

LEBEDEV, G.V.; CHUCHKIN, V.G.; SABININA, Ye.D.; BRYUKVIN, V.G.

Apparatus for continuous recording of water absorption by plants. Fiziol. rast. 11 no.6:1110-1114 N-D '64. (MIRA 18:2)

1. Timiriazev Institute of Plant Physiology, U.S.S.R. Academy of Sciences, Moscow.

APPROVED FOR RELEASE: 08/23/2000 CIA-RDP86-00513R001446620001-7"

"APPROVED FOR RELEASE: 08/23/2000 CIA-RDP86-00513R001446620001-7

IOFFE, B.V.; SABININA, Ye.I.

Condensation of asymmetric dipropyl- and dibutylhydrazines with acrolein and methacrolein. Zhur.ob.khim. 33 no.7:2188-2196 Jl '63. (MIRA 16:8)

1. Leningradskiy gosudarstvennyy universitet.
(Hydrazine) (Acrolein)

APPROVED FOR RELEASE: 08/23/2000 CIA-RDP86-00513R001446620001-7"

"APPROVED FOR RELEASE: 08/23/2000 CIA-RDP86-00513R001446620001-7

20348

S/020/61/136/005/006/032
C111/C222

16.7600
16.3500

AUTHOR: Sabinina, Ye. S.

TITLE: The Cauchy Problem for an Equation Describing Unsteady Gas Flow Through a Porous Medium and Involving Many Space Variables

PERIODICAL: Doklady Akademii nauk SSSR, 1961, Vol. 136, No. 5, pp. 1034 - 1037

TEXT: In the region $G\{-\infty < x < \infty, 0 < t < T\}$ the author considers the Cauchy problem

(1) $\partial u/\partial t = \Delta \varphi(u)$

(2) $u|_{t=0} = u_0(x)$; $x = (x_1, \ldots, x_N)$, $0 \leq u_0(x) \leq M$, $\lim_{x\to\infty} u_0(x) = u_\infty$,

where Δ is the Laplace operator, $\varphi'(u) > 0$ for $0 < u < \infty$, $\varphi'(0) \geq 0$, $\varphi(0) = 0$, $\varphi(u) \in C^{2+\alpha}$.

A function $u(x,t)$ bounded in G is called a generalized solution of (1)-(2) if there exist generalized derivatives $\partial\varphi(u)/\partial x_i$ being summable

Card 1/5

APPROVED FOR RELEASE: 08/23/2000 CIA-RDP86-00513R001446620001-7"

"APPROVED FOR RELEASE: 08/23/2000 CIA-RDP86-00513R001446620001-7

20348

S/020/61/136/005/006/032
C111/C222

The Cauchy Problem for an Equation Describing Unsteady Gas Flow Through a Porous Medium and Involving Many Space Variables

in the square in G, $\iint_G \left[u(x,t) - u_\infty\right]^2 dx\, dt < \infty$, and

$$(3) \quad \iint_G \left[u \frac{\partial f}{\partial t} - \sum_{i=1}^{N} \frac{\partial \varphi(u)}{\partial x_i} \frac{\partial f}{\partial x_i}\right] dx\, dt + \int_{-\infty}^{\infty} u_o(x) f(x,0) dx = 0$$

is satisfied for every continuously differentiable $f(x,t)$ which vanishes outside of a finite region of the halfspace $t \leq T$.
The uniqueness of the generalized solution can be proved as in (Ref. 1). For the case that $u_o(x) \geqslant \delta > 0$ and the $\partial \varphi(u_o)/\partial x_i$ as well as the difference $\varphi(u_o) - \varphi(u_\infty)$ are summable in the square the generalized solution is constructed as follows. By the transformation $\varphi(u) = v$, $u = \phi(v)$, (1) changes to $\phi'(v)\, \partial v/\partial t = \Delta v$ with the initial conditions $v|_{t=0} = v_o(x)$, where $v_o(x) = \varphi(u_o(x))$, $v_\infty = \varphi_\infty$. Now the

Card 2/5

APPROVED FOR RELEASE: 08/23/2000 CIA-RDP86-00513R001446620001-7"

"APPROVED FOR RELEASE: 08/23/2000 CIA-RDP86-00513R001446620001-7

20348

S/020/61/136/005/006/032
C111/C222

The Cauchy Problem for an Equation Describing Unsteady Gas Flow Through a Porous Medium and Involving Many Space Variables

author considers functions $v_0^h(x)$ satisfying the following conditions: 1). $v_0^h(x) \in C^{2+\alpha}$ in the space x 2). for $h \to 0$, $v_0^h(x)$ converge in the mean to $v_0(x)$ together with the first derivatives, where $v_0^h > \alpha > 0$ 3) the integral of the squares of the derivatives of $v_0^h(x)$ and $|v_0^h(x)|$ is bounded by a constant C independent of h. The author introduces the auxiliary equation

(4) $$\phi'(v(x,t-h))\,\partial v/\partial t = \Delta v$$

for $t > 0$ and with the initial conditions

(5) $$v|_{t=0} = v_0^h(x),$$

where $h > 0$ and $v(x,t) \equiv v_0^h(x)$ for $t < 0$ ($v^h(x,t)$ is a solution of (4)-(5)). With the aid of the results of (Ref. 4) the solution v^h is obtained

Card 3/ 5

APPROVED FOR RELEASE: 08/23/2000 CIA-RDP86-00513R001446620001-7"

"APPROVED FOR RELEASE: 08/23/2000 CIA-RDP86-00513R001446620001-7

20348
S/020/61/136/005/006/032
C111/C222

The Cauchy Problem for an Equation Describing Unsteady Gas Flow Through a Porous Medium and Involving Many Space Variables

as a limit value ($m \to \infty$) of the solutions $v_m^h(x,t)$ of (4), (5) in auxiliary regions $-m \leq x_i \leq m$. Then v is obtained from the v^h by the limiting process $h \to 0$. Since $v = \varphi(u)$ and $\phi(v) = u$, the properties of v proved by limiting processes can be used for showing that the u(x,y) constructed in this manner satisfies all claims on a generalized solution of (1)-(2) (cf. the above definition).
Finally it is shown that u(x,t) is the classical solution of (1)-(2).
Theorem : The bounded classical solution of the Cauchy problem (1)-(2) exists if $u_0(x) \geqslant \delta > 0$ and it is continuous, and the generalized derivatives of the function $\varphi(u_0(x))$ and the difference $\varphi(u_0(x)) - \varphi(u_\infty)$ are summable in the square.

The author thanks the scientific leader O.A. Oleynik for aid.
There are 5 references : 3 Soviet and 2 American.

Card 4/5

APPROVED FOR RELEASE: 08/23/2000 CIA-RDP86-00513R001446620001-7"

"APPROVED FOR RELEASE: 08/23/2000 CIA-RDP86-00513R001446620001-7

20348

S/020/61/136/005/006/032
C111/C222

The Cauchy Problem for an Equation Describing Unsteady Gas Flow Through a Porous Medium and Involving Many Space Variables

[Abstracter's note : (Ref. 4) is a paper of A. Friedman in J. Math. and Mech., 1958, Vol. 7, No. 5]

ASSOCIATION: Moskovskiy gosudarstvennyy universitet imeni M.V.Lomonosova (Moscow State University imeni M.V. Lomonosov)

PRESENTED: July 16, 1960, by I.G. Petrovskiy, Academician

SUBMITTED: July 16, 1960

Card 5/5

APPROVED FOR RELEASE: 08/23/2000 CIA-RDP86-00513R001446620001-7"

"APPROVED FOR RELEASE: 08/23/2000 CIA-RDP86-00513R001446620001-7

S/020/62/143/004/004/027
B112/B102

AUTHOR: Sabinina, Ye. S.

TITLE: A class of non-linear degenerate parabolic equations

PERIODICAL: Akademiya nauk SSSR. Doklady, v. 143, no. 4, 1962, 794-797

TEXT: The boundary value problem $u_{xx} - a(u)u_t = 0$, $u|_{t=0} = u_0(x) \geqslant 0$, $u|_{x=0} = \varphi_1(t) \geqslant 0$, $u|_{x=X} = \varphi_2(t) \geqslant 0$ ($\infty > a > 0$ for $\infty > u > 0$, $a(0) = 0$, $\infty > a' > 0$ for $\infty > u > 0$) is considered. The existence and uniqueness of a generalized solution is demonstrated. If this solution vanishes in a certain point (η, δ), then it will vanish on the whole straight line $t = \delta$. For the case $\varphi_1(t) = \varphi_2(t) = 0$, $u_0(x) \not\equiv 0$, the solution will vanish in a certain point of the domain $0 < x < X$, $t > 0$ then and only then when the integral $\int_0^1 (a(u)/u)du$ converges. The existence and uniqueness

Card 1/2

APPROVED FOR RELEASE: 08/23/2000 CIA-RDP86-00513R001446620001-7"

"APPROVED FOR RELEASE: 08/23/2000 CIA-RDP86-00513R001446620001-7

of a classical solution of Cauchy's problem for the equation $u_{xx} - a(u)u_t = 0$ is demonstrated too.

ASSOCIATION: Moskovskiy gosudarstvennyy universitet im. M. V. Lomonosova (Moscow State University imeni M. V. Lomonosov)

PRESENTED: November 16, 1961, by I. G. Petrovskiy, Academician

SUBMITTED: November 14, 1961

APPROVED FOR RELEASE: 08/23/2000 CIA-RDP86-00513R001446620001-7"

"APPROVED FOR RELEASE: 08/23/2000 CIA-RDP86-00513R001446620001-7

SABININA, Ye.S.

A class of nonlinear degenerating parabolic equations. Dokl. AN SSSR 143 no.4:794-797 Ap '62. (MIRA 15:3)

1. Moskovskiy gosudarstvennyy universitet im. M.V.Lomonosova. Predstavleno akademikom I.G.Petrovskim.
(Differential equations)

APPROVED FOR RELEASE: 08/23/2000 CIA-RDP86-00513R001446620001-7"

"APPROVED FOR RELEASE: 08/23/2000 CIA-RDP86-00513R001446620001-7

SABININA, Ye. S.

Dissertation defended for the degree of Candidate of Physicomathematical Sciences at the Joint Scientific Councilon Physicomathematical and Technical Sciences; Siberian Branch

"Several Classes of Degenerate Quasi-Linear Equations of the Parabolic Type."

Vestnik Akad. Nauk, No. 4, 1963, pp 119-145

APPROVED FOR RELEASE: 08/23/2000 CIA-RDP86-00513R001446620001-7"

"APPROVED FOR RELEASE: 08/23/2000 CIA-RDP86-00513R001446620001-7

L 16463-66 EWT(d) IJP(c)

ACC NR: AP6005844 SOURCE CODE: UR/0199/65/006/005/1074/1100

35
33
B

AUTHOR: Sabinina, Ye. S.

ORG: none

16,44,55

TITLE: On a class of quasi-linear parabolic equations unsolvable with respect to the time derivative

SOURCE: Sibirskiy matematicheskiy zhurnal, v. 6, no. 5, 1965, 1074-1100

TOPIC TAGS: partial differential equation, parabolic equation, boundary value problem, Cauchy problem, boundary layer theory, first boundary value problem

ABSTRACT: The equations of the type

$$\frac{\partial}{\partial x}\left(p(x,t)\frac{\partial u}{\partial x}\right)+\frac{\partial}{\partial x}B(u,x,t)+\Theta(u,x,t)-\frac{\partial}{\partial t}A(u,x,t)=0, \quad (1)$$

are studied. Under certain limitations on the coefficients of (1), a proof is given of the existence and uniqueness of generalized solutions for the first boundary value problem and the Cauchy problem for this equation when the initial and bound-

UDC: 517.944/.947

Card 1/2

APPROVED FOR RELEASE: 08/23/2000 CIA-RDP86-00513R001446620001-7"

"APPROVED FOR RELEASE: 08/23/2000 CIA-RDP86-00513R001446620001-7

L 16463-66
ACC NR: AP6005844

2

ary functions are non-negative. This type of equation is encountered in the layer theory. A qualitative study is made of the generalized solutions of the Cauchy and boundary value problems in an unbounded region. The author expresses her deep gratitude to Professor O. A. Oleynik for his help and useful observations. I also acknowledge the numerous suggestions and observations given by A. M. Il'in. Orig. art. has: 127 formulas.

SUB CODE: 12/ SUBM DATE: 05Oct64/ ORIG REF: 004/ OTH REF: 001

Card 2/2 mc

APPROVED FOR RELEASE: 08/23/2000 CIA-RDP86-00513R001446620001-7"

"APPROVED FOR RELEASE: 08/23/2000 CIA-RDP86-00513R001446620001-7

SABINOVSKIY, D. A.; [illegible]; [illegible]

Feed Water Purification

Bubbling in deaerators of feed water.
Elek. Sta., 23, No. 4, 1952.
Inzh. Sverdlovenergo

SO: Monthly List of Russian Accessions, Library of Congress, August 1952 1953, Uncl.

APPROVED FOR RELEASE: 08/23/2000 CIA-RDP86-00513R001446620001-7"

"APPROVED FOR RELEASE: 08/23/2000 CIA-RDP86-00513R001446620001-7

21

Calculation of the heat of combustion of Yugoslav lignites from the results of immediate analysis. P. Sabioncello. *Arhiv Hem. i Tehnol.* 12, 106-8(1939).—The value of k in the formula $Q = 82C_f + kV$ (Q = heat of combustion, V and C are percentage contents of volatile and nonvolatile C compds., resp.) varies from 58.5 to 62.0 for different samples. B. C. P. A.

ASM-SLA METALLURGICAL LITERATURE CLASSIFICATION

APPROVED FOR RELEASE: 08/23/2000 CIA-RDP86-00513R001446620001-7"

"APPROVED FOR RELEASE: 08/23/2000 CIA-RDP86-00513R001446620001-7

1ST AND 2ND ORDERS

3RD AND 4TH ORDERS

PROCESSES AND PROPERTIES INDEX

BC

Analysis of two coals from southern Herzegovina and Dalmatia. R. Podhorsky and P. Sabioncello (*Arh. Kemije*, 1949, 21, 85—90).—Analytical data are recorded for various samples of bituminous coal from Lastva and Konovli.

R. T.

COMMON ELEMENTS

COMMON VARIABLES INDEX

MATERIALS INDEX

ASM-SLA METALLURGICAL LITERATURE CLASSIFICATION

APPROVED FOR RELEASE: 08/23/2000 CIA-RDP86-00513R001446620001-7"