"APPROVED FOR RELEASE: 09/19/2001 CIA-RDP86-00513R001446810015-1

NEYMAN, L.R.; TOLSTOV, Yu.G., doktor tekhn. nauk; PIMENOV, V.P., kand. tekhn. nauk; POSSE, A.V., kand. tekhn. nauk; SAKOVICH, A.A., kand. tekhn. nauk; BUTAYEV, F.I., kand. tekhn. nauk; MEL'GUNOV, N.M., inzh.; SONIN, M.R., inzh.

[Long-distance high-voltage direct-current transmission] Peredacha energii postoiannogo toka vysokogo napriazheniia na dal'nie rastoianiia. Pod red. L.R. Neimana. Moskva, 1958. 64 p. (MIRA 11:10)

1. Russia (1923- U.S.S.R.) Sovet Ministrov. Gosudarstvennyy nauchno-tekhnicheskiy komitet. 2. Chlen-korrespondent Akademii nauk SSSR (for Neyman).
(Electric power distribution)

APPROVED FOR RELEASE: 09/19/2001 CIA-RDP86-00513R001446810015-1"

"APPROVED FOR RELEASE: 09/19/2001 CIA-RDP86-00513R001446810015-1

110-4-13/25

AUTHOR: Sakovich, A.A., and Yuditskiy. S.B., Candidates of Technical Sciences

TITLE: The Stability of Mercury Valve Excitation Systems (Ob ustoychivosti raboty sistemy vozbuzhdeniya rtutnykh ventiley)

PERIODICAL: Vestnik Elektropromyshlennosti, 1958, No. 4, pp. 38 - 42 (USSR).

ABSTRACT: Single-anode valves are particularly subject to extinction of the excitation-arc when grid control is used. The stability of alternating-current excitation is reduced by the ionic current that flows to the excitation anode at high loads. B.N. Klyarfel'd, in his works notes the influence of the excitation anode configuration and also of lowering the vapour-pressure on the arc stability at low loads. Other investigators have suggested other causes but so far extinction of the excitation arc has not been completely prevented. Since this kind of extinction is one of the main defects of the valves, special investigations were conducted at the All-Union Electrotechnical Institute, with close attention to the influence of the processes of current commutation of the main anode on extinction of the excitation. A special equivalent circuit illustrated in Fig.1 was used to investigate the influence of commutation of the main current and

Card1/5

APPROVED FOR RELEASE: 09/19/2001 CIA-RDP86-00513R001446810015-1"

"APPROVED FOR RELEASE: 09/19/2001 CIA-RDP86-00513R001446810015-1

reproduced the most severe operating conditions of the valve. The apparatus imposes on the anode circuit of the valve periodically-repeated current impulses having amplitudes of up to 1 200 A and with rates of change of current of the order of $10^7 - 10^8$ A/sec. Immediately after the current impulse has passed, a negative voltage of the order of several kv is applied to the anode. The main circuit components are described. The operation of the circuit during tests on a large high-voltage valve is illustrated by the oscillogram in Fig.2. The influence of the main current circuit on the excitation system of the valve is illustrated by the oscillogram in Fig.3, taken whilst the excitation was working on a.c. This oscillogram shows that arc extinction occurs at the instant when the main anode ceases to pass current. The method that is described can be used to cause artificial extinction of the excitation arc under the influence of processes in the main circuit. Hence, it can be used to determine how changes in construction or in the circuit influence the stability of the excitation arc.
An investigation was then made of the effect of structural features of the valve on extinction of the excitation. It was found that the use of a hollow excitation anode did not assist

APPROVED FOR RELEASE: 09/19/2001 CIA-RDP86-00513R001446810015-1"

"APPROVED FOR RELEASE: 09/19/2001 CIA-RDP86-00513R001446810015-1

stability. The influence of screening the excitation anode was examined. As earlier work had shown that the arc was more stable if the mercury vapour pressure was raised, shields were used to raise the pressure of mercury vapour near the anode, but this measure had no important effect. Nor did changes in the location of the anode relative to the centre of the cathode appreciably influence the stability of the excitation arc. However, it was established that when the resistance in the excitation anode circuit and the voltage applied to the arc were increased, the mean time of burning of the arc was extended. It was also extended by increasing the inductance. Raising the excitation current from 8 to 10 A greatly improved the stability of burning.

An investigation was made of the influence of the excitation current and of the amplitude of the impulse anode current on the arc stability, using an experimental mercury-arc rectifier, type PMHB, 200 x 6 connected as shown in Fig.4. A constant current was maintained in the excitation anode circuit and current impulses were applied to the main anode. For each value of excitation current the relationship between the time of burning of the arc and the amplitude of the current impulse was determined for two values of excitation current; the results

APPROVED FOR RELEASE: 09/19/2001 CIA-RDP86-00513R001446810015-1"

"APPROVED FOR RELEASE: 09/19/2001 CIA-RDP86-00513R001446810015-1

are graphed in Fig.5. This graph indicates that when the anode current impulse ranges from 500 to 700 A, increased excitation causes the curves to be displaced in the direction of higher current impulses on the main anode. In other words, the time of burning is longer when the current is greater.
The effect of extinction of the excitation arc when the main current ceases to flow (which is the main cause of unstable operation of the excitation in single anode valves) was observed for the first time in this work. The reasons for this are discussed in relation to the theory of Prof. L.A. Sen and the work of A.V. Rubchinskiy. The excitation arc was certainly not extinguished every time the cathode spot disappeared. The effect of repeated ignition of the cathode spot results from the statistical nature of the relationship between extinction of excitation and the discharge parameters of the main circuit.
In considering the stability of the excitation arc, it is necessary to distinguish between the factors that reduce the stability at low and at high loads on the main anode.
Stability of the excitation system can be increased by raising the mean excitation current, but this is expensive. It is, therefore, better to use other means such as a series forcing

APPROVED FOR RELEASE: 09/19/2001 CIA-RDP86-00513R001446810015-1"

"APPROVED FOR RELEASE: 09/19/2001 CIA-RDP86-00513R001446810015-1

transformer in the excitation circuit. Then when the current on the main anode increases, a counter-voltage is induced in the excitation circuit by the forcing transformer and this reduces the short-term excitation current almost to zero. When the main anode current falls, the excitation current increases and reaches a peak value of almost double the main current. When the main current has died down, the series transformer acts as a choke in the excitation circuit so that the excitation current slowly falls to its mean value. Forcing of the excitation is also applicable when a.c. excitation is used. The engineers who took part in the experimental work were N.Yu. Nadal'yak, S.Yu. Nemchin and A.A. Petsev. There are 5 figures.

ASSOCIATION: All-Union Electro-technical Institute (Vsesoyuznyy elektrotekhnickeskiy institut)

SUBMITTED: November 14, 1957

AVAILABLE: Library of Congress

Card 5/5

APPROVED FOR RELEASE: 09/19/2001 CIA-RDP86-00513R001446810015-1"

"APPROVED FOR RELEASE: 09/19/2001 CIA-RDP86-00513R001446810015-1

SAKOVICH, AA

AUTHOR: Sakovich, A. A., Candidate of Technical Sciences 105-58-4-12/37

TITLE: Increasing the Reliability of Transducer Circuits (Povysheniye nadezhnosti preobrazovatel'nykh skhem)

PERIODICAL: Elektrichestvo, 1958, Nr 4, pp. 53-57 (USSR)

ABSTRACT: Based on direct investigations of the plants using modern and especially elaborated apparatus for this purpose (cathode--ray oscillograph, separator, shunt, electronic indicator) the character of the occurring phenomena was determined. Based on the analysis of these, practical measures for securing a normal operation of high-voltage transducer circuits as well as for the elimination or sufficient reduction of the disturbance level were elaborated. These measures are described and the processes on the arrest of commutation, the processes in the ignition of valves, the influence of the processes in the power circuit on the control current and the increase of operation stability in the converter are described. This complex of measures elaborated from investigations described here was checked in a plant of the order of 15 MW at 10 kV. The plant which

Card 1/2

APPROVED FOR RELEASE: 09/19/2001 CIA-RDP86-00513R001446810015-1"

"APPROVED FOR RELEASE: 09/19/2001 CIA-RDP86-00513R001446810015-1

Increasing the Reliability of Transducer Circuits 105-58-4-12/37

until then could not be put to operation started normal operation. A check with greater plants also yielded positive results. The system of pre-ignation was checked by the collaborators of the NIIPT in the converter substation of the transfer line Kashira-Moscow. The following scientists took part in the experiments for this work: N. M. Maslennikov, Candidate of Technical Sciences, S. M. Luzhanskiy, Engineer, V. P. Nadgornyy, Engineer, Ye. P. Shmarina, Engineer, L. I. Luzhanskaya, Engineer, I. V. Blond, Engineer. There are 8 figures and 4 Soviet references.

ASSOCIATION: Vsesoyuznyy elektrotekhnicheskiy institut im. Lenina (All-Union Institute for Electrical Engineering imeni Lenin)

SUBMITTED: October 10, 1957

AVAILABLE: Library of Congress

1. Transducer circuits-Reliability

Card 2/2

APPROVED FOR RELEASE: 09/19/2001 CIA-RDP86-00513R001446810015-1"

"APPROVED FOR RELEASE: 09/19/2001 CIA-RDP86-00513R001446810015-1

Sakovich, A.A.,

AUTHORS: Butayev, F. I., Candidate of Technical Sciences, Klimov, N. S., Candidate of Technical Sciences, Kostrov, M. F., Candidate of Technical Sciences, Sakovich, A. A., Candidate of Technical Sciences

105-58-5-1/28

TITLE: A High-Power High-Voltage Valve (Moshchnyy vysokovol'tnyy ventil')

PERIODICAL: Elektrichestvo, 1958, Nr 5, pp. 1-7 (USSR)

ABSTRACT: At first a survey of the development of the high-voltage valves abroad and at home is given. In the USSR such works were carried out in the laboratories of the VEI (A. N. Larionov, S. V. Krauz 1937, N. S. Klimov 1938 - 1939, M. I. Gal'din 1940). After the war high-voltage valves and control boxes for the first test-d.-c.-trunk line from the hydroelectric plant Kashira to Moscow were elaborated. These works were mainly performed in the Scientific Engineering Office of the former Ministry for Electrical Industry under participation of important German specialists, as G. Dobke, R. Knel'ters, and others. 30 valves of the type VR-1 were produced by this office and partly by the

Card 1/5

APPROVED FOR RELEASE: 09/19/2001 CIA-RDP86-00513R001446810015-1"

"APPROVED FOR RELEASE: 09/19/2001 CIA-RDP86-00513R001446810015-1

test works of the VEI during the second half of 1950 - 1951 12 valves of the type VR-3 for a maximum of 300 A and 130 kV were produced in the VEI. Since 1952 works were started on a valve for a maximum of 900 a and 130 kV. These works are shortly described here. 1) The problem whether the valve is to be constructed as single-anode- or multi-anode-valve, was solved in favor of the single-anode type. It was shown that the difficulties in connection with the discharge concentration on a small cross section can be overcome. 2) The number of the insets was selected in a way that the advantages are relatively great and the disadvantages are as small as possible. The tests were carried out with 15 (valve by Kesayev), 5, 4, 3, 2 and 1 insets (construction by Andreyev). 3) The problem of size and density of these insets is finally to be cleared in the plant. 4) The materials were investigated, 1951 - 1952 a special vacuum--technological equipment was put into operation, solitary test stands were established (up to 1000 A and 160 kV, pulse circuit up to 350 kV). The construction of the valve essentially differs from those used in industry. Then

APPROVED FOR RELEASE: 09/19/2001 CIA-RDP86-00513R001446810015-1"

"APPROVED FOR RELEASE: 09/19/2001 CIA-RDP86-00513R001446810015-1

follows a description of such a valve of the type VR 9/3 for 900 A and 130 kV. In 1952 25 samples of different power and different types were produced. The electric strength of the valve is high. In static tests it stands 140 - 160 kV without an exterior divider. The investigations of the mercury vapor took place according to the probe methods, which had been elaborated in the Laboratory for gas discharge devices at the VEI. The electrical tests at full amperage and voltage were carried out with the equivalent scheme constructed in the VEI for maximally 1000 A and 160 kV, and valuable data were obtained. An extraordinary phenomenon was determined: At positive anode-voltage and normal operation of all excitation anodes and nets no lighting of the principal anode took place at high voltage. At low voltage this phenomenon was not observed. This fact is explained by the occurrence of negative potentials. In investigating the overload capacity it was found that also at 15 000 A within the range of working temperatures an interruption of the current does not occur. Then the voltage in the

APPROVED FOR RELEASE: 09/19/2001 CIA-RDP86-00513R001446810015-1"

"APPROVED FOR RELEASE: 09/19/2001 CIA-RDP86-00513R001446810015-1

arc drops to 700 - 800 V. For the purpose of energy investigations a test stand for 120 MVA was built at the Moscow Institute for D. C. The results of the first test series showed that 900 A and a countervoltage jump of 50 kV no disturbances occurred at the valves. At 900 A and 90 kV countervoltage jump the valves do not lead to an extinction of the excitation arc. For the transmission line from the Stalingrad hydroelectric plant to Donbass (the voltage between the poles amounts to 800 kV and the amperage in the line to 900 A) the VEI proposed an eight-bridge-scheme. The voltage of each bridge amounts to 100 kV. The scheme was accepted by the expert commission. Here two valves are connected in series into the bridge arm: maximum countervoltage 61 kV, countervoltage jump 34 kV, maximum amperage 900 A. - The work for the valve was performed at the Laboratory for High-Voltage Rectifiers at the VEI under participation of the Laboratory for Gas Discharge Devices, and of the Laboratory for Physical Investigations at the institute. The samples of the valves were produced by the electromechanical test plant of the VEI. The porcelain- and ceramic products were produced by the

APPROVED FOR RELEASE: 09/19/2001 CIA-RDP86-00513R001446810015-1"

"APPROVED FOR RELEASE: 09/19/2001 CIA-RDP86-00513R001446810015-1

A High-Power High-Voltage Valve 105-58-5-1/28

"Izolyator" porcelain plant and by the Institute of the GIEKI. N. P. Stepanov, N. P. Savin, N. M. Maslennikov, I. D. Shkolin, A. A. Pertsev, V. S. Grigor'yev, A. A. Timofeyev, R. I. Grigor'yeva, V. V. Bazhenov, I. V. Blond, A. A. Ivanov, Ye. P. Shmarina and others directly and actively participated in the work. There are 12 figures.

ASSOCIATION: Vsesoyuznyy elektrotekhnicheskiy institut im. Lenina (VEI) (All-Union Institute for Electrical Engineering imeni Lenin)

SUBMITTED: November 5, 1957

AVAILABLE: Library of Congress

1. Electron tubes--Development 2. Electron tubes--USSR
3. Electron tubes--Test results 4. Electron tubes--Applications
5. Transmission lines--Equipment

Card 5/5

APPROVED FOR RELEASE: 09/19/2001 CIA-RDP86-00513R001446810015-1"

"APPROVED FOR RELEASE: 09/19/2001 CIA-RDP86-00513R001446810015-1

SOKOLOV, Nikolay Nikolayevich; ANDRIANOV, K.A.,red.; AKOPYAN, A.A.,red.; BIRYUKOV, V.G.,glavnyy red.; BUTKEVICH, G.V.,red.; GRANOVSKIY, V.L.red.; GERTSENBERG, G.R.,red.; ZABYRINA, K.I.,red.; KALITVYANSKIY, V.I.,red.; KLYARFEL'D, B.N.; SAKOVICH, A.A.; TIMOFEYEV, P.V.; FASTOVSKIY, V.G.; TSEYROV, Ye.M.; FRIDMAN, A.Ya.; SHEMAYEV, A.M.; TIMOKHINA, V.I.,red.

[Methods for the synthesis of organopolysiloxanes] Metody sinteze poliorganosiloksanov. Moskva, Gos.energ. izd-vo. 1959. 198 p. (Moscow. Vsesoiuznyi elektrotekhnicheskii institut. Trudy, no.66) (MIRA 12:5)

(Siloxanes)

APPROVED FOR RELEASE: 09/19/2001 CIA-RDP86-00513R001446810015-1"

"APPROVED FOR RELEASE: 09/19/2001 CIA-RDP86-00513R001446810015-1

8(2)

AUTHORS: Sakovich, A. A., Candidate of Technical Sciences, Suyetin, T. A., Candidate of Physico-Mathematical Sciences

SOV/105-59-1-17/29

TITLE: Investigation of Type IVS 100/15 Soldered Ignitrons (Issledovaniya zapayannykh ignitronov tipa IVS 100/15)

PERIODICAL: Elektrichestvo, 1959, Nr 1, pp 68-72 (USSR)

ABSTRACT: The ignitrons of type IVS 100/15 have a maximum cutoff voltage of 15 kv, a medium anode current of 100 a, an admissible overload up to 300% at intermittent load, and up to 1600 a during one or two half-cycles. After having completed the testing of the experimental types in the laboratory, the limiting parameters of the valves were determined. In the experiments were taking part: N. M. Maslennikov, S. M. Luzhanskiy, V. P. Nadgornyy, Ye. P. Shmarina, L. I. Luzhanskaya and I. V. Blond. Data were obtained for determining operational characteristics. Then these valves were used for the aggregates of the railroad substations on railroad main lines (Ref 1), for high-voltage rotary converters and for a number of other aggregates. Working conditions for the valve in the converter connection scheme are determined not only

Card 1/3

APPROVED FOR RELEASE: 09/19/2001 CIA-RDP86-00513R001446810015-1"

"APPROVED FOR RELEASE: 09/19/2001 CIA-RDP86-00513R001446810015-1

by the maximum and medium values of the direct current and the maximum value of the cutoff voltage but also by the character of the current and voltage change with time. In experiments, the characteristics of ignitrons were found concerning the electric and valve strength, the control effect of the grid, and the optimum operation conditions for different operation methods. As these valves differed very much from the commonly used detachable exhaust valves, methods for testing the modern types of soldered large valves were worked out in the experiments carried on here. The following schemes were used as main testing connection schemes: 1) A three-phase scheme with neutral point; the scheme works inductively in short-circuit operation. This scheme was applied for investigation of the valve characteristics at continuous intermittent load. 2) A three-phase bridge scheme; the scheme works inductively in short-circuit operation. This scheme was used for investigating the valve performance in rectifier and inverter operation. The phenomena in connection with the valve performance under a high potential against the earth were analyzed. 3) A three-phase bridge scheme with 2 parallel valves on each arm. The

APPROVED FOR RELEASE: 09/19/2001 CIA-RDP86-00513R001446810015-1"

"APPROVED FOR RELEASE: 09/19/2001 CIA-RDP86-00513R001446810015-1

Investigation of Type IVS 100/15 Soldered Ignitrons SOV/105-59-1-17/29

scheme works in short-circuit operation or in rectifier-inverter operation (the so-called circular scheme). This scheme was used for investigating the parallel operation of valves and the reliability of their work in continuous operation.- In the course of investigations, a number of new phenomena was detected. In high currents, the valves continued working after switching off the ignition circuit. The elimination of the harmful phenomena required a careful working out and adjustment of the control scheme. Special difficulties arose in the working out of measures to protect the control scheme from overvoltage. Very extensive were the investigations to eliminate failures to ignite. It was found that in case of soldered valves of the present type the arc-backs occur with a decrease of the coolant temperature. It was found that the valves can stand current overloads up to 16 ka occurring in disturbances, without any trouble to the vacuum and without any deterioration of the electric parameters. There are 5 figures and 2 Soviet references.

SUBMITTED: June 11, 1958

Card 3/3

APPROVED FOR RELEASE: 09/19/2001 CIA-RDP86-00513R001446810015-1"

"APPROVED FOR RELEASE: 09/19/2001 CIA-RDP86-00513R001446810015-1

SOV/105-59-5-4/29

8(3)

AUTHOR: Sakovich, A. A., Candidate of Technical Sciences

TITLE: Investigation of the Electric Characteristics of High-voltage Mercury Valves (Issledovaniye elektricheskikh kharakteristik vysokovol'tnykh rtutnykh ventiley)

PERIODICAL: Elektrichestvo, 1959, Nr 5, pp 14-17 (USSR)

ABSTRACT: Some results of the investigation of mercury valves are given here. At high current intensities, an irregular voltage division arises between the electrodes in the valve, as well as overvoltages at the secondary electrodes. The investigations of the valves were carried out on a performance test stand with a three-phase wiring with neutral point and short-circuited reactors (Fig 1). By a commutation of the transformers, the feeding voltage and the reactance of the anode circuit were changed. The high-voltage mercury valves of the VR-1 and VR-3 type were used as test samples. On the basis of the tests, the author makes his conclusions as follows: 1) In the operation with superhigh voltage, high-voltage valves can let currents exceeding the breaking current at low voltage pass through without suffering harm. But if the breaking current at low voltage is

Card 1/3

APPROVED FOR RELEASE: 09/19/2001 CIA-RDP86-00513R001446810015-1"

"APPROVED FOR RELEASE: 09/19/2001 CIA-RDP86-00513R001446810015-1

SOV/105-59-5-4/29

Investigation of the Electric Characteristics of High-voltage Mercury Valves

smaller than some hundreds of amperes, overvoltages and the breaking of current will also occur at high voltage. At periodically repeating breaks of the current, the valve may soon fall off because of the pulverization of the anode. 2) The voltage division in the anodes of the high-voltage valves is irregular. In rectifying, the interspace nearest to the anode carries the main load, in the inverter operation - the last. In the moment where the discharge is formed, negative voltages arise at the dynodes because of the non-simultaneous ignition of the same. To improve the work of the valves it is convenient to connect an ohmic voltage divider to lead off the charges from the dynodes. 3) Overvoltages can arise at all electrodes of the high-voltage valve. All insulated electrodes must have leading-outs and be protected by dischargers. The dischargers must be calculated for the reaction voltage. This voltage must be coordinated with the insulation of the auxiliary devices. The dischargers must be calculated for a current intensity which is equal to the possible maximum current intensity in the circuit of the principal anode. The following collaborators of the VEI took part in the execution of the tests: V. D. Andreyev, N. M. Maslennikov,

Card 2/3

APPROVED FOR RELEASE: 09/19/2001 CIA-RDP86-00513R001446810015-1"

"APPROVED FOR RELEASE: 09/19/2001 CIA-RDP86-00513R001446810015-1

SOV/105-59-5-4/29

Investigation of the Electric Characteristics of High-voltage Mercury Valves

Ye. P. Shmarina, I. V. Blond, R. I. Grigor'yeva, L. I. Luzhanskaya, P. A. Rudskiy, I. M. Blyumkin, as well as K. V. Khar'kova, Co-worker of the MO NIIPT (Moscow Branch of the Direct-current Scientific Research Institute). There are 5 figures and 6 Soviet references.

ASSOCIATION: Vsesoyuznyy elektrotekhnicheskiy institut im. Lenina (All-Union Electrotechnical Institute imeni Lenin)

SUBMITTED: November 6, 1958

Card 3/3

APPROVED FOR RELEASE: 09/19/2001 CIA-RDP86-00513R001446810015-1"

"APPROVED FOR RELEASE: 09/19/2001 CIA-RDP86-00513R001446810015-1

SOV/110-59-6-3/24

AUTHOR: Sakovich, A.A., Candidate of Technical Sciences; Grigor'yeva, R.I., Engineer; Grigor'yev, V.S., Engineer and Blond, I.V., Engineer

TITLE: An Investigation of a Titanium Absorption Pump (Issledovaniya titanovogo absorbtsionnogo nasosa)

PERIODICAL: Vestnik elektropromyshlennosti, 1959, Nr 6, pp 13-16 (USSR)

ABSTRACT: Existing types of vacuum pump are subject to various operating difficulties when installed on high-voltage valves. The pump here described is based on the principle that titanium does not react with mercury but can absorb gas when hot. Hot titanium reacts irreversibly with most gases and volatile organic compounds. These substances penetrate the crystal-lattice of the titanium, forming solid solutions. Except for hydrogen, gases thus absorbed are not released during subsequent heat-treatment under vacuum. This principle formed the basis of the model absorption pump which is illustrated diagrammatically in Fig 1. The absorber is a block of porous titanium containing a heater. Because different parts of the block are heated to different temperatures different gases are absorbed. The device

Card 1/5

APPROVED FOR RELEASE: 09/19/2001 CIA-RDP86-00513R001446810015-1"

"APPROVED FOR RELEASE: 09/19/2001 CIA-RDP86-00513R001446810015-1

SOV/110-59-6-3/24

An Investigation of a Titanium Absorption Pump

was found to be fairly effective at pressures between 0.5 and 0.001 mm Hg. As porous titanium contains a considerable quantity of occluded gas, prolonged de-gasification was necessary. The device does not absorb inert gases and evolution of hydrogen is possible if the thermal conditions are unsuitable. Titanium absorbs gases best when it is condensing on a surface and attempts have been made to use this principle in the construction of pumps. However, as pumps of this kind are complicated and unreliable, improved methods of atomising titanium were sought. It was accordingly decided to locate the titanium in the mercury cathode and atomise it by ionic bombardment in the presence of a cathode spot. A model absorption pump constructed on this principle is shown in Fig 2; it is installed in a high-voltage valve. Authors' certificate Nr 111517 of 11th March 1957 has been taken out by three of the above authors for this device. The titanium electrode is on the centre line of the valve and is surrounded by an auxiliary electrode at a positive potential. When

Card 2/5

APPROVED FOR RELEASE: 09/19/2001 CIA-RDP86-00513R001446810015-1"

"APPROVED FOR RELEASE: 09/19/2001 CIA-RDP86-00513R001446810015-1

SOV/110-59-6-3/24

An Investigation of a Titanium Absorption Pump

negative potential is applied to the titanium electrode an ionic current passes causing atomisation. The atomised titanium is deposited on a screen and on the auxiliary electrode, creating an active surface that effectively absorbs the gas. The screen protects the internal parts of the valve from contamination with atomised titanium. Some results of tests on the absorbing power of atomised titanium obtained with this model are plotted in Fig 3. It was found that when pumping air the lower limit of pressure is below 2×10^{-5} mm Hg. The weight of absorption with a current of 2.5 mA and a voltage of 2.5 kV for various gases is tabulated; the figures relate to a volume of 20 litres with an initial pressure between 60 and 70 microns Hg. The electrical circuit shown diagrammatically in Fig 4 may be used to supply the electrodes of the device. Employing this simple circuit, it was possible to make up a sample titanium absorption pump and instal it in a mercury rectifier type VR-3M as illustrated diagrammatically in Fig 5. The valve was subjected to

Card 3/5

APPROVED FOR RELEASE: 09/19/2001 CIA-RDP86-00513R001446810015-1"

"APPROVED FOR RELEASE: 09/19/2001 CIA-RDP86-00513R001446810015-1

SOV/110-59-6-3/24

An Investigation of a Titanium Absorption Pump

the usual manufacturing cycle of vacuum treatment and forming. After evacuation by a mercury pump, the valve was connected to the absorption pump. Tests were then made on the rectifier on a low-voltage bench and at high voltage using an equivalent circuit. The electric strength was checked periodically by static tests. The valve was maintained for 2000 hours without the mercury pump in use and operated under load for about 400 hours: there was no case of pump failure. When the valve was left for a long time without pumping, leakage caused the internal pressure to rise to some 5 or 10 microns Hg but when the absorption pump was connected the vacuum was soon restored. A defect of the pump is that it absorbs inert gases only very slightly: hence, if there is an appreciable ingress of air, atmospheric argon may accumulate in the valve. The service life of the absorption pump, though not yet established, is likely to be considerable and can probably be made of the order of 10000 hours. The power required for the pump is about

Card 4/5

APPROVED FOR RELEASE: 09/19/2001 CIA-RDP86-00513R001446810015-1"

"APPROVED FOR RELEASE: 09/19/2001 CIA-RDP86-00513R001446810015-1

SOV/110-59-6-3/24

An Investigation of a Titanium Absorption Pump

100 W, most of which is absorbed by the auxiliary electrode. By a slight change in construction the latter could be used as an excitation anode; the power required to operate the pump would then be considerably reduced. One of the advantages of the pump is its high pumping speed at low pressures. A disadvantage is the presence of a high voltage on the auxiliary electrode which, amonst other things, limits the upper pressure to between 200 and 500 microns Hg: beyond this limit corona occurs and atomisation of the electrode is much reduced. There are 5 figures, 1 table and 3 references, 1 of which is Soviet, 1 English and 1 German.

Card 5/5

APPROVED FOR RELEASE: 09/19/2001 CIA-RDP86-00513R001446810015-1"

"APPROVED FOR RELEASE: 09/19/2001 CIA-RDP86-00513R001446810015-1

MASLENNIKOV, N.M.; SAKOVICH, A.A.; ANDREYEV, V.D.

Firing of a sectionalized high-voltage rectifier.
Elektrichestvo no.6:25-29 Je '60. (MIRA 13:7)

1. Vsesoyuznyy elektrotekhnicheskiy institut im. Lenina.
(Electric current rectifiers)

APPROVED FOR RELEASE: 09/19/2001 CIA-RDP86-00513R001446810015-1"

"APPROVED FOR RELEASE: 09/19/2001 CIA-RDP86-00513R001446810015-1

NIKONOV, V.N.; SAKOVICH, A.A.

Electric current converter with silicon rectifier for use in electrometallurgical enterprises. Elektrichestvo no.12:55-59 D '62. (MIRA 15:12)

1. Vsesoyuznyy elektrotekhnicheskiy institut imeni Lenina.
(Electric current rectifiers)

APPROVED FOR RELEASE: 09/19/2001 CIA-RDP86-00513R001446810015-1"

"APPROVED FOR RELEASE: 09/19/2001 CIA-RDP86-00513R001446810015-1

VOSKRESENSKIY, V.V.; SAKOVICH, A.A.; BARAKAYEV, Kh.F.; TRAVIN, L.V.

Improvements of the operating conditions of rectifiers in three-phase bridge circuits. Izv. vys. ucheb. zav.; elektromekh. 5 no.2:229-232 '62. (MIRA 15:3)
(Electric current rectifiers) (Bridge circuits)

APPROVED FOR RELEASE: 09/19/2001 CIA-RDP86-00513R001446810015-1"

"APPROVED FOR RELEASE: 09/19/2001 CIA-RDP86-00513R001446810015-1

SAKOVICH, A.A., kand. tekhn. nauk; YUDITSKIY, S.B., kand. tekhn. nauk; KURTSINA, Z.T., inzh.; FUKALOVA, R.A., inzh.; IN'KOV, Yu.M., inzh.

Converter system with silicon rectifiers for a.c. multiple-unit cars. Elektrotekhnika 34 no.11:25-30 N '63. (MIRA 17:2)

APPROVED FOR RELEASE: 09/19/2001 CIA-RDP86-00513R001446810015-1"

"APPROVED FOR RELEASE: 09/19/2001 CIA-RDP86-00513R001446810015-1

ACCESSION NR: AP4042063 S/0105/64/000/007/0012/0018

AUTHOR: Sakovich, A. A. (Candidate of technical sciences); Yuditskiy, S. B. (Candidate of technical sciences); Abramovich, M. I. (Engineer); Sokolova, N. D. (Engineer)

TITLE: Using thyristors in control circuits of static frequency changers

SOURCE: Elektrichestvo, no. 7, 1964, 12-18

TOPIC TAGS: thyristor, frequency changer, thyristor frequency changer, thyristor control

ABSTRACT: The well-known general characteristics of thyristors are described, as well as the fundamental circuits in which the thyristor is used as a switching element. As an example of thyristor control for frequency changers a scheme of the conversion of single-phase into 3-phase power with step frequency lowering is described in detail. A rectifying-pulse generator 1 (see Enclosure 1) with its amplifier 2 and ring switch 3 ensures, via transformer 4, feeding the power thyristors with control pulses for single-phase/3-phase-lower-frequency

Card 1/3

APPROVED FOR RELEASE: 09/19/2001 CIA-RDP86-00513R001446810015-1"

"APPROVED FOR RELEASE: 09/19/2001 CIA-RDP86-00513R001446810015-1

ACCESSION NR: AP4042063

conversion. Generator 5 of inverter pulses with its amplifier 6 ensures feeding the control pulses that correspond to the invertor operation of the power thyristors. Frequency regulator 7 ensures the simultaneous phase control of the rectifying pulses by controlling the generator-1 voltage and the divider-8 frequency. Power-supply unit 9 feeds the system with ac and dc; other blocks are intended for protection. A simplified connection diagram is supplied, and the functioning of the control system is explained. Two thyristor control schemes converting 50 cps single-phase into 0—16-2/3 cps (stepwise) 3-phase power were built. One of them serves to control 3-phase induction motors from 1 to 10 kw in a laboratory. The other was put into tentative operation on 1Dec62. Orig. art. has: 6 figures and 3 formulas.

ASSOCIATION: Vsesoyuzny*y elektrotekhnicheskiy institut (All-Union Electrotechnical Institute)

SUBMITTED: 27Feb64 ENCL: 01

SUB CODE: EC, EE NO REF SOV: 000 OTHER: 000

Card 2/3

APPROVED FOR RELEASE: 09/19/2001 CIA-RDP86-00513R001446810015-1"

"APPROVED FOR RELEASE: 09/19/2001 CIA-RDP86-00513R001446810015-1

ACCESSION NR: AP4042063

ENCLOSURE: 01

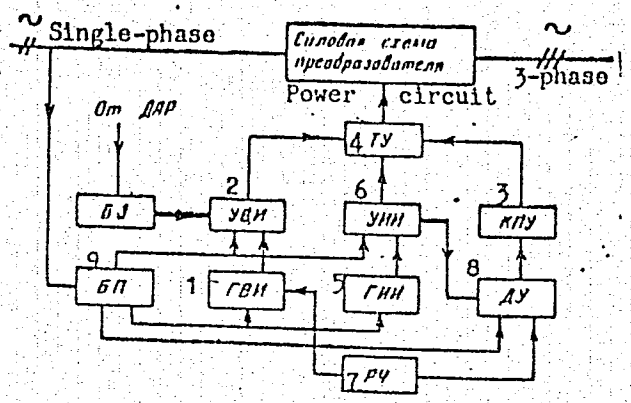

A block diagram of the single-phase-to-3-phase frequency-lowering thyristor-control system

Card 3/3

APPROVED FOR RELEASE: 09/19/2001 CIA-RDP86-00513R001446810015-1"

"APPROVED FOR RELEASE: 09/19/2001 CIA-RDP86-00513R001446810015-1

SAKOVICH, A.A., kand. tekhn. nauk; YUDITSKIY, S.B., kand. tekhn. nauk.; ABRAMOVICH, N.D., inzh.

Multichannel ring-type switching device using regulated silicon valves. Elektrotekhnika 35 no.5:60-61 My'64 (MIRA 17:8)

APPROVED FOR RELEASE: 09/19/2001 CIA-RDP86-00513R001446810015-1"

"APPROVED FOR RELEASE: 09/19/2001 CIA-RDP86-00513R001446810015-1

RYVKIN, A.M., kand.tekhn.nauk; SAKOVICH, A.A., inzh.; SURUTINA, T.A., inzh.

Operation of the KNOA-110/1000 contactor at a low temperature. Elektrotekhnika 36 no.1:18-20 Ja '65. (MIRA 18:3)

APPROVED FOR RELEASE: 09/19/2001 CIA-RDP86-00513R001446810015-1"

"APPROVED FOR RELEASE: 09/19/2001 CIA-RDP86-00513R001446810015-1

ALEKSASHKIN, A.A. (Moskva); BYKOV, Ye.I. (Moskva); ZEMLYANAYA, Ye.A. (Moskva); [illegible]OV, L.B. (Moskva); KURTSINA, Z.T. (Moskva); POSELENOV, L.G. (Moskva); SHADVICH, A.A. (Moskva); YUDITSKIY, S.B. (Moskva)

New semiconductor rectifiers for subway traction substations.
Elektrichestvo no.1:42-48 Ja '65. (MIRA 18:7)

APPROVED FOR RELEASE: 09/19/2001 CIA-RDP86-00513R001446810015-1"

"APPROVED FOR RELEASE: 09/19/2001 CIA-RDP86-00513R001446810015-1

SAKOVICH, A.A., kand. tekhn. nauk; BRUNSHTEYN, D.P., inzh.; IN'KOV, Yu.M., inzh.

Effect of the plate current drop rate on the recovery of the peak inverse anode voltage of semiconductor devices. Elektrotekhnika. 36 no.9:37-41 S '65. (MIRA 18:9)

APPROVED FOR RELEASE: 09/19/2001 CIA-RDP86-00513R001446810015-1"

"APPROVED FOR RELEASE: 09/19/2001 CIA-RDP86-00513R001446810015-1

ISAYEV, I.P., prof., doktor tekhn. nauk; SAKOVICH, A.A., kand. tekhn. nauk; BRUNSHTEYN, D.P., inzh.; IN'KOV, Yu.M., inzh.; POLYAKOVA, T.S., inzh.

Distribution of reverse voltage in series-connected rectifiers. Trudy MIIT no.207:15-29 '65. (MIRA 19:1)

APPROVED FOR RELEASE: 09/19/2001 CIA-RDP86-00513R001446810015-1"

"APPROVED FOR RELEASE: 09/19/2001 CIA-RDP86-00513R001446810015-1

L 11551-66 EWT(1)/EWT(m)/EEC(k)-2/T/EWP(t)/EWP(b)/EWA(h) IJP(c) JD

ACC NR: AP6005026 SOURCE CODE: UR/0105/65/000/001/0042/0048

AUTHOR: Aleksashkin, A. A.; Bykov, Ye. I.; Zemlyanaya, Ye. A.; Krotov, L. B.; Kurtsina, Z. T.; Poselenov, L. B.; Sakovich, A. A.; Yuditskiy, S. B.

ORG: none

TITLE: New semiconductor rectifiers for the rectifier substations of subways

SOURCE: Elektrichestvo, no. 1, 1965, 42-48

TOPIC TAGS: semiconductor rectifier, electric engineering, electric substation equipment

ABSTRACT: Computations are presented to prove the feasibility and economy of replacing the six IVS-500/2 type sealed mercury-arc rectifiers with stacks of VK-200/4A type silicon rectifier cells (average current 200 amp; operating peak inverse voltage [PIV] 400 v; rated PIV 600 v) in the rectifier substations that supply 825 volts d-c for subway traction. The computed six-phase rectifier unit has six parallel branches per phase, with six series-connected cells per branch. The number of parallel branches is computed on the basis of peak load and surge current, taking the circuit-breaker interrupting time into consideration. The number of series-connected cells is computed on the basis of the PIV's, with allowances for variations in the supply voltage. The overall efficiency of the rectifier unit is 98.9 percent. It is assembled from modular stacks (12 cells and one fan per module) and fits into two cabinets 800 by 600 by 2000 mm. Although at present silicon rectifiers are more expensive than mercury-arc

Card 1/2 UDC: 621.314.632.4:621.311.44:625.42

APPROVED FOR RELEASE: 09/19/2001 CIA-RDP86-00513R001446810015-1"

"APPROVED FOR RELEASE: 09/19/2001 CIA-RDP86-00513R001446810015-1

L 11551-66

ACC NR: AP6005026

rectifiers (due to the high cost of single-crystal silicon and the low level of automation), conversion of subway substations to such rectifiers pays for itself in five to six years, and the economy of building new rectifier substations of this type is even greater. Orig. art. has: 4 figures, 23 formulas, and 1 table. [JPRS]

SUB CODE: 09 / SUBM DATE: 08Jun64 / ORIG REF: 002

HW

Card 2/2

APPROVED FOR RELEASE: 09/19/2001 CIA-RDP86-00513R001446810015-1"

"APPROVED FOR RELEASE: 09/19/2001 CIA-RDP86-00513R001446810015-1

ACC NR: AP7009073 SOURCE CODE: UR/0413/67/000/003/0049/0049

INVENTOR: Sakovich, A. A.; Sitnik, N. Kh.; Abramovich, M. I.; Antonov, B. M.; Bogryy, V. S.

ORG: None

TITLE: A reversible static converter. Class 21, No. 190974 [announced by the All-Union Electrical Engineering Institute im. V. I. Lenin (Vsesoyuznyy elektrotekhnicheskiy institut)]

SOURCE: Izobreteniye, promyshlennyye obraztsy, tovarnyye znaki, no. 3, 1967, 49

TOPIC TAGS: nonrotary electric power converter, voltage regulator, phase shifter

ABSTRACT: This Author's Certificate introduces: 1. A reversible static converter with controllable output voltage. The unit contains a phase shifter and controlled rectifier. The output voltage control range is expanded and operational reliability is improved by making the device in the form of individual unified cells connected to operate in parallel depending on the load. 2. A modification of this converter in which each cell is made in the form of a single-phase commutator inverter connected to the input of the corresponding phase shifter. 3. A modification of this converter in which the single-phase commutator inverter is made up of silicon-controlled rectifiers connected in a bridge circuit with two series-connected rectifiers in each arm of the

 UDC: 621.314.58

APPROVED FOR RELEASE: 09/19/2001 CIA-RDP86-00513R001446810015-1"

"APPROVED FOR RELEASE: 09/19/2001 CIA-RDP86-00513R001446810015-1

ACC NR: AP7009073

bridge.

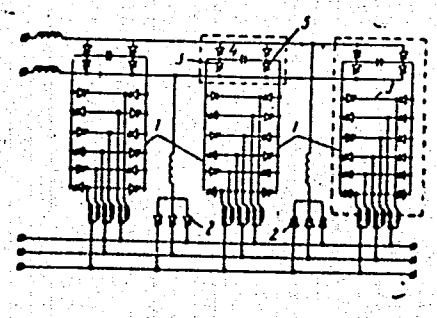

1—phase shifters; 2—controlled rectifier; 3—unified cells; 4—inverter; 5—controlled rectifiers in the inverter

SUB CODE: 09/13/ SUBM DATE: 26Feb64

Card 2/2

APPROVED FOR RELEASE: 09/19/2001 CIA-RDP86-00513R001446810015-1"

"APPROVED FOR RELEASE: 09/19/2001 CIA-RDP86-00513R001446810015-1

30848. SAKOVICH, A. I.

Sistema korrigirovaniya zatsepleniy dlya uvelicheniya moshchnosti, kotoryyd mogut peredavat' shesterni. Nauch. trudy (Odes. in-t inzhenerov mor. flota), vyp. 8, 1949, s. 83-93.

APPROVED FOR RELEASE: 09/19/2001 CIA-RDP86-00513R001446810015-1"

"APPROVED FOR RELEASE: 09/19/2001 CIA-RDP86-00513R001446810015-1

SAKOVICH, A.I., dotsent; ROMANOVSKIY, F.D., dotsent

Determining the efficiency of the program control of gantry grab cranes in sea ports. Ekon. i ekspl. mor. transp. no.1: 43-46 '63. (MIRA 17:8)

1. Odesskiy institut inzhenerov morskogo flota.

APPROVED FOR RELEASE: 09/19/2001 CIA-RDP86-00513R001446810015-1"

"APPROVED FOR RELEASE: 09/19/2001 CIA-RDP86-00513R001446810015-1

SAKOVICH, A. N.

Bobin, V. V. and Sakovich, A. N. "On the effect of mud baths on humoral immunity", Sbornik nauch. trudov kurorta Saki, Vol. IV, 1948, p. 75-77

So: U-3261, 10 April 1953, (Letopis 'Zhurnal 'nykh, Statey, No. 12, 1949).

APPROVED FOR RELEASE: 09/19/2001 CIA-RDP86-00513R001446810015-1"

"APPROVED FOR RELEASE: 09/19/2001 CIA-RDP86-00513R001446810015-1

USSR / Human and Animal Morphology (Normal and Pathological). S
Circulatory System. Blood Vessels.

Abs Jour : Ref Zhur - Biologiya, No 1, 1959, No. 2939

Author : Izosimov, V. V.; Sakovich, A. N.; Birkun, A. A.
Inst : Crimean Medical Institute
Title : A Variety of Patent Ductus Arteriosus

Orig Pub : Tr. Krymsk. med. in-ta, 1957, 18, 531-534

Abstract : The author describes the case of presence of a direct communication between the right pulmonary artery and the aorta, measuring 1 cm in diameter, in an 18-year-old patient. It was impossible to localize the anastomosis intravitally.

Card 1/1

APPROVED FOR RELEASE: 09/19/2001 CIA-RDP86-00513R001446810015-1"

"APPROVED FOR RELEASE: 09/19/2001 CIA-RDP86-00513R001446810015-1

SAKOVICH, A.N., Cand Med Sci -- (diss) "Surgical anatomy of the arterial duct." Simferopol', 1959, 12 pp (Crimean State Med Inst im I.V. Stalin) 200 copies (KL, 36-59, 119)

APPROVED FOR RELEASE: 09/19/2001 CIA-RDP86-00513R001446810015-1"

"APPROVED FOR RELEASE: 09/19/2001 CIA-RDP86-00513R001446810015-1

EL'BERT, B.Ya, professor, zasluzhennyy deyatel' nauki; RUBINSHTEYN, I.S., dotsent; SAKOVICH, A.O., dotsent; VILENCHIK G.Yu., kandidat meditsinskikh nauk; GUREVICH, G.TS, kandidat meditsinskikh nauk; IZRAITEL', N.A., kandidat meditsinskikh nauk; KNIGA, A.N., kandidat meditsinskikh nauk; LEVINA, P.I., kandidat meditsinskikh nauk; MARCHENKO,L.O., kandidat meditsinskikh nauk; RABINOVICH, Ye.M., kandidat meditsinskikh nauk; RUBINSHTEYN, B.B, kandidat meditsinskikh nauk; SAMOKHINA, Z.F., kandidat meditsinskikh nauk; KRASIL'NIKOV: A.P., kandidat meditsinskikh nauk; ZMUSHKO, L.S., nauchnyy sotrudnik; NISENBAUM, I.M., nauchnyy sotrudnik; SOLOV'YANCHIK,S.I., nauchnyy sotrudnik; SUSLOVA, M.N., nauchnyy sotrudnik; POL'SKIY, S., redaktor; KUFTINA, P., tekhnicheskiy redaktor; KALECHITS, G., tekhnicheskiy redaktor.

[Practical manual on medical microbiology and bacteriological methods of sanitation research] Prakticheskoe posobie po meditsinskoi mikrobiologii i sanitarno-bakteriologicheskim metodam issledovanii. Minsk, Gos.izd-vo BSSR, Redaktsiia nauchno-tekhn. lit-ry, 1957. 356 p. (MLRA 10:6)

(MICROBIOLOGY)

APPROVED FOR RELEASE: 09/19/2001 CIA-RDP86-00513R001446810015-1"

"APPROVED FOR RELEASE: 09/19/2001 CIA-RDP86-00513R001446810015-1

SAKOVICH, A. V. PHASE I BOOK EXPLOITATION SOV/6228

Agafonov, Vasiliy Prokhorovich, and Aleksey Valer'yanovich Sakovich

Voyennaya svyaz' (Military Communications) Moscow, Voyenizdat M-va obor. SSSR, 1962. 232 p. Errata slip inserted. 8000 copies printed.

Ed.: A. V. Vrublevskiy, Engineer-Colonel; Tech. Ed.: T. F. Myasnikova.

PURPOSE: This book is intended for officers of ground forces and may also be useful to officers and noncommissioned officers in signal communications who are studying problems in military communications.

COVERAGE: The book discusses the means and types of military communications, their tasks and requirements, and methods for the organization and development of communications. According to the annotation, the book is a reflection of the viewpoints of the authors and is not to be considered as an official statement regarding military communications. The book is based on Soviet and non-Soviet open-

Card 1/4

APPROVED FOR RELEASE: 09/19/2001 CIA-RDP86-00513R001446810015-1"

"APPROVED FOR RELEASE: 09/19/2001 CIA-RDP86-00513R001446810015-1

source materials. Chapter II, Section 2 was written by V. S. Chernyshev and V. P. Yagodin; Chapter II, Section 3, by M. D. Artamonov; and Chapter II, Sections 4 and 5, by K. F. Minalovich. No personalities are mentioned. There are 27 references, all Soviet.

TABLE OF CONTENTS:

Ch. I. Military Communications: Tasks and Requirements 3
1. From the bonfire and drum to the radio station 3
2. Complexity of troop control in modern combat and operations 12
3. The use of technical means for troop control 14
4. Communication -- the basic means of troop control 16
5. Basic problems in communications 17
6. Requirements for communications 18

Ch. II. Means and Types of Military Communications 22
1. General concept of modern means and types of military communications 22

APPROVED FOR RELEASE: 09/19/2001 CIA-RDP86-00513R001446810015-1"

"APPROVED FOR RELEASE: 09/19/2001 CIA-RDP86-00513R001446810015-1

AGAFONOV, Vasiliy Prokhorovich; SAKOVICH, Aleksey Valer'yanovich.
Prinimali uchastiye: CHERNYSHEV, V.S.; YAGODIN, V.P.;
ARTAMONOV, M.D.; MINALOVICH, K.F.; VRUBLEVSKIY, A.V.,
inzh.-polkovnik, red.; MYASNIKOVA, T.F., tekhn. red.

[Military communications]Voennaia sviaz'. Moskva, Voenizdat,
1962. 232 p. (MIRA 15:11)
(Communications, Military)

APPROVED FOR RELEASE: 09/19/2001 CIA-RDP86-00513R001446810015-1"

"APPROVED FOR RELEASE: 09/19/2001 CIA-RDP86-00513R001446810015-1

SAKOVICH, F.I., kandidat tekhnicheskikh nauk

Examination of stability of the mole drainage in peat by methods of roentgenoscopy. Izv.AN BSSR. no.4:89-92 Jl-Ag'55. (MLRA 8:12)

(Drainage) (X rays--Industrial application)

APPROVED FOR RELEASE: 09/19/2001 CIA-RDP86-00513R001446810015-1"

"APPROVED FOR RELEASE: 09/19/2001 CIA-RDP86-00513R001446810015-1

SAKOVICH, F.I.

Abstract of H.D.Kohler's article "Mechanical control of silt deposits and plants growing in canals" (From Wasserwirtschaft, Wassertechnik, no.4, 1954). Abstracted by Sakovich. Izv.AN BSSR no.6:171 N-D '55. (MLRA 9:6)
(Canals)

APPROVED FOR RELEASE: 09/19/2001 CIA-RDP86-00513R001446810015-1"

"APPROVED FOR RELEASE: 09/19/2001 CIA-RDP86-00513R001446810015-1

SAKOVICH, F.I., kandidat tekhnicheskikh nauk.

Hydraulic conditions of an experimental plot for bottom-land meadow formation. Trudy Inst.mel.,vod.i bol.khoz.AN BSSR 6: 281-300 '55. (MLRA 9:10)

(White Russia--Pastures and meadows)

APPROVED FOR RELEASE: 09/19/2001 CIA-RDP86-00513R001446810015-1"

"APPROVED FOR RELEASE: 09/19/2001 CIA-RDP86-00513R001446810015-1

SAKOVICH, F.I., kandidat tekhnicheskikh nauk.

Mechanization of irrigation works becomes popular ("Agricultural Machinery Journal," v.1, no.4, 1954. Reviewed by F.I.Sakovich). Vestsi AN BSSR Ser.fiz.-tekh.nav.no.1:153-154 '56. (MLRA 9:10)
(Great Britain--Hydraulic engineering)

APPROVED FOR RELEASE: 09/19/2001 CIA-RDP86-00513R001446810015-1"

"APPROVED FOR RELEASE: 09/19/2001 CIA-RDP86-00513R001446810015-1

SAKOVICH, F.I., kandidat tekhnicheskikh nauk.

Mole drainage in Poland ("Gospodarka Wodna," no.7, 1953. Reviewed by F.I.Sakovich). Vestsi AN BSSR Ser.fiz.-tekh.nav.no.1:155-157 '56. (Poland--Drainage) (MLRA 9:10)

APPROVED FOR RELEASE: 09/19/2001 CIA-RDP86-00513R001446810015-1"

"APPROVED FOR RELEASE: 09/19/2001 CIA-RDP86-00513R001446810015-1

SAKOVICH, F.I., kandidat tekhnicheskikh nauk.

Improvement of land in Polish orchards; an abstract of an article by Strievskii. Vestsi AN BSSR.Ser.biial.nav. no.3:131-132 '56. (MLRA 10:1)

(Poland--Fruit culture)

APPROVED FOR RELEASE: 09/19/2001 CIA-RDP86-00513R001446810015-1"

"APPROVED FOR RELEASE: 09/19/2001 CIA-RDP86-00513R001446810015-1

SAKOVICH, F.I.

Methods for studying frainage in stony soils. Vestsi AN BSSR.Ser. biial.nav. no.3:133 '56. (MLRA 10:1)
(Drainage)

APPROVED FOR RELEASE: 09/19/2001 CIA-RDP86-00513R001446810015-1"

"APPROVED FOR RELEASE: 09/19/2001 CIA-RDP86-00513R001446810015-1

SAKOVICH, F.I. [translator].

Mechanical cleaning of irrigation flumes with planetary flume cleaning devices (from "Deutche Agrartechnik", no.1, 1955. Translated by F.I. Sakovich.) Vestsi AN BSSR. Ser. fiz.-tekh. nav. no.4:163 '56.
(Irrigation canals and flumes) (MIRA 10:6)

APPROVED FOR RELEASE: 09/19/2001 CIA-RDP86-00513R001446810015-1"

"APPROVED FOR RELEASE: 09/19/2001 CIA-RDP86-00513R001446810015-1

SAKOVICH, F.I., kandidat tekhnicheskikh nauk.

Mechanical strength and the calculation of stability of mole drains. Trudy Inst.mel., vod.i bol.khoz.AN BSSR 7:109-137 '56. (MLRA 10:5)

(Drainage) (Peat soils)

APPROVED FOR RELEASE: 09/19/2001 CIA-RDP86-00513R001446810015-1"

"APPROVED FOR RELEASE: 09/19/2001 CIA-RDP86-00513R001446810015-1

SAKOVICH, F.I., kandidat tekhnicheskikh nauk.

The use of mole drainage in Poland. Gidr. i mel 8 no.11:54-57 N '56. (MLRA 10:4)

(Poland--Drainage)

APPROVED FOR RELEASE: 09/19/2001 CIA-RDP86-00513R001446810015-1"

"APPROVED FOR RELEASE: 09/19/2001 CIA-RDP86-00513R001446810015-1

USSR/Soil Science. Tillage. Melioration. Erosion J-5

Abs Jour : Ref Zhur - Biol., No 10, 1958, No 43890

Author : Sokovich F.I.
Inst : Belorussian Scientific Research Institute of Melioration and Water Economy
Title : Contribution to the Problem of Reconstructing Drainage Systems.

Orig Pub : V sb.: Osnovnyye rezul'taty nauchno-issled. raboty Belorussk. n.-i. in-ta melior. i vodn. kh-va za 1956 g. Minsk, AN BSSR, 1957, 99-104

Abstract : No abstract

Card : 1/1

APPROVED FOR RELEASE: 09/19/2001 CIA-RDP86-00513R001446810015-1"

"APPROVED FOR RELEASE: 09/19/2001 CIA-RDP86-00513R001446810015-1

SAKOVICH, F.I.

Conference on engineering and operation related to problems in drainage. Gidr.i mel. 9 no.7:63-64 Jl '57. (MIRA 10:8)
(Drainage)

APPROVED FOR RELEASE: 09/19/2001 CIA-RDP86-00513R001446810015-1"

"APPROVED FOR RELEASE: 09/19/2001 CIA-RDP86-00513R001446810015-1

SAKOVICH, F.I.; ROMANOVA, T.A. [Ramanava, T.A.]

Disturbances in the moisture conditions of soils caused by a lowered ground water level. Vestsi AN BSSR Ser. biial. nav. no. 2:112-115 '58. (MIRA 11:8)

(Germany, West--Water, Underground)

APPROVED FOR RELEASE: 09/19/2001 CIA-RDP86-00513R001446810015-1"

"APPROVED FOR RELEASE: 09/19/2001 CIA-RDP86-00513R001446810015-1

SAKOVICH, F.I.

SAKOVICH, F.I., kand.tekhn.nauk.

Using chemicals for killing vegetation in irrigation and drainage canals. Vestsi AN BSSR. Ser. fiz.-tekh. nav. no.2:173-174 '57. (MIRA 11:1)

(Herbicides) (Irrigation canals and flumes)
(Drainage)

APPROVED FOR RELEASE: 09/19/2001 CIA-RDP86-00513R001446810015-1"

"APPROVED FOR RELEASE: 09/19/2001 CIA-RDP86-00513R001446810015-1

SAKOVICH, F. I.

99-7-14/14

SUBJECT: USSR/Drainage

AUTHOR: Sakovich, F.I.

TITLE: "Industrial - Technical Conference on Drainage Problems". (Proizvodstvenno-tekhnicheskaya konferentsiya po voprosam osusheniya)

PERIODICAL: "Gidrotekhnika i Melioratsiya", 1957, # 7, pp 63-64 (USSR)

ABSTRACT: A converence, dealing with problems of planning, construction and operation of drainage systems, was held in MINSK on 21 March 1957. The conference was presided by V.M. Zubets, Minister of Melioration of the BSSR, and was attended by representatives of meliorative organizations of the Latvian, Lithuanian, Ukrainian and Estonian SSRS. Zubets, made an appeal to the assembly to speed up the execution of melioration projects. E.I.Lubyanko, chief engineer of BELGIPROVODKHOZ, discussed the main reasons for the unsatisfactory functioning of different drainage systems. A. Ravin'sh, chief engineer of the SALDUS MMS (MMO) of the Latvian SSR reported slow progress of melioration work due to shortage of drain pipes and excavators. The scientists K.T. Khommika and Y.K. Tomberg lectured on: "Questions of calculating costs for drainage systems" and "The permeability of soils in

Card 1/2

APPROVED FOR RELEASE: 09/19/2001 CIA-RDP86-00513R001446810015-1"

"APPROVED FOR RELEASE: 09/19/2001 CIA-RDP86-00513R001446810015-1

99-7-14/14

TITLE: "Industrial - Technical Conference on Drainage Problems". (Proizvodstvenno-tekhnicheskaya konferentsiya po voprosam osusheniya)

connection with drainage".

ASSOCIATION: Ministry of Melioration of the BSSR
Ministerstvo melioratsii BSSR (БССР)
White Russian Government Institute for the Planning of Water Supply (Economics)
Belorusskiy institut po Proektirovaniyu Vodnogo Khozyastva BSSR (ГИПРОВОДХОЗ БССР).

PRESENTED BY:

SUBMITTED:

AVAILABLE: At the Library of Congress.

Card 2/2

APPROVED FOR RELEASE: 09/19/2001 CIA-RDP86-00513R001446810015-1"

"APPROVED FOR RELEASE: 09/19/2001 CIA-RDP86-00513R001446810015-1

SAKOVICH, F.I., kand.tekhn.nauk

New instrument for measuring slowly flowing streams. Vestsi AN BSSR.Ser.fiz.-tekh.nav. no.4:128-129 '58. (MIRA 12:4)
(Stream measurements)

APPROVED FOR RELEASE: 09/19/2001 CIA-RDP86-00513R001446810015-1"

"APPROVED FOR RELEASE: 09/19/2001 CIA-RDP86-00513R001446810015-1

SAKOVICH, F.I., kand. tekhn. nauk.

Use of mole drainage on peat soils of the White Russian S.S.R.
Zemledelie 6 no.2:90-91 '58. (MIRA 11:3)
(Drainage)

APPROVED FOR RELEASE: 09/19/2001 CIA-RDP86-00513R001446810015-1"

"APPROVED FOR RELEASE: 09/19/2001 CIA-RDP86-00513R001446810015-1

SAKOVICH, F.I., kand. tekhn. nauk

Improving flood lands in White Russia. Zemledelie 6 no.11:79-80 N '58. (MIRA 11:11)

(White Russia--Alluvial lands)

APPROVED FOR RELEASE: 09/19/2001 CIA-RDP86-00513R001446810015-1"

"APPROVED FOR RELEASE: 09/19/2001 CIA-RDP86-00513R001446810015-1

SAKOVICH, F.I., kand. tekhn. nauk

Raising forage plants in peat bogs of Poland. Vestsi AN BSSR. Ser. biial. nav. no.1:135-136 '59. (MIRA 12:7)
(Poland--Peat bogs) (Forage plants)

APPROVED FOR RELEASE: 09/19/2001 CIA-RDP86-00513R001446810015-1"

"APPROVED FOR RELEASE: 09/19/2001 CIA-RDP86-00513R001446810015-1

SAKOVICH, F., kand.tekhn.nauk

State of drainage in Poland and outlook for its future development. Vestsi AN BSSR.Ser.biial.nav. no.2:141-142 '59. (MIRA 12:9)

(POLAND--DRAINAGE)

APPROVED FOR RELEASE: 09/19/2001 CIA-RDP86-00513R001446810015-1"

"APPROVED FOR RELEASE: 09/19/2001 CIA-RDP86-00513R001446810015-1

SAKOVICH, F.I., kand.tekhn.nauk (g.Minsk)

Problems of land reclamation at the scientific conference devoted to the 50th anniversary of the Minsk Swamp Experiment Station. Gidr. i mel. 13 no.11:52-56 N '61. (MIRA 14:10)
(Drainage--Congresses) (Peat soils)

APPROVED FOR RELEASE: 09/19/2001 CIA-RDP86-00513R001446810015-1"

"APPROVED FOR RELEASE: 09/19/2001 CIA-RDP86-00513R001446810015-1

SAKOVICH, F.I., kand. tekhn. nauk (Minsk)

Coordinating conference on problems in draining and reclaiming peat bogs. Gidr. i mel. 15 no.6:55-56 Je '63. (MIRA 16:8)

APPROVED FOR RELEASE: 09/19/2001 CIA-RDP86-00513R001446810015-1"

"APPROVED FOR RELEASE: 09/19/2001 CIA-RDP86-00513R001446810015-1

RUSINOV, I.F., kand.tekhn.nauk (Moskva); SAKOVICH, F.I., kand.tekhn.nauk (Minsk)

Conference on the improvement and utilization of irrigated lands in the non-Chernozem zone of the Soviet Union. Gidr. i mel. 15 no.10:58-62 O '63. (MIRA 17:2)

APPROVED FOR RELEASE: 09/19/2001 CIA-RDP86-00513R001446810015-1"

"APPROVED FOR RELEASE: 09/19/2001 CIA-RDP86-00513R001446810015-1

SAKOVICH, F.I., kand.tekhn.nauk; KALECHITS, N.P.

Utilization of drained lands in White Russia. Zemledelie 25 no.5:11-16 My '63. (MIRA 16:7)

1. Belorusskiy nauchno-issledovatel'skiy institut melioratsii i vodnogo khozyaystva (for Sakovich). 2. Direktor Minskogo eksperimental'nogo khozyaystva Belorusskogo nauchno-issledovatel'skogo instituta melioratsii i vodnogo khozyaystva (for Kalechits).
(Minsk Province--Peat bogs) (Minsk Province--Drainage)

APPROVED FOR RELEASE: 09/19/2001 CIA-RDP86-00513R001446810015-1"

"APPROVED FOR RELEASE: 09/19/2001 CIA-RDP86-00513R001446810015-1

SAKOVICH, I.P. (Simferopol', ul. Zhukovskogo, 20, kv.21); VINOGRADOV, S.A. prof.

Morphologic changes in the vermiform process in appendicitis. Vest. khir. 92 no.4:60-64 Ap '64 (MIRA 18:1)

1. Iz fakul'tetskoy khirurgicheskoy kliniki (zav. - prof. P.P. TSarenko) i kafedry patologicheskoy anatomii (zav. - prof. S.A. Vinogradov) Krymskogo meditsinskogo instituta.

APPROVED FOR RELEASE: 09/19/2001 CIA-RDP86-00513R001446810015-1"

"APPROVED FOR RELEASE: 09/19/2001 CIA-RDP86-00513R001446810015-1

SAKOVICH, G. N.
USSR/Miscellaneous - Biography

Card 1/1

Author : Sakovich, G. N.

Title : In Memory of G. F. Voronog

Periodical : Vest. AN SSSR, Ed. 2, 119-121, Feb/1954

Abstract : A memoriam is presented in honor of a leading mathematician, Georgiy Fedosievich Vorong, on the 45th anniversary of his death. Also mentioned are the accomplishments of G. F. Voronog in the field of higher mathematics.

Institution : .....

Submitted : .....

APPROVED FOR RELEASE: 09/19/2001 CIA-RDP86-00513R001446810015-1"

"APPROVED FOR RELEASE: 09/19/2001 CIA-RDP86-00513R001446810015-1

SAKOVICH, G.N., student V kursa.

Some properties of generalized quasi-smooth functions. Stud.nauk. pratsi no.16:119-150 '55. (MLRA 10:2)
(Functions)

APPROVED FOR RELEASE: 09/19/2001 CIA-RDP86-00513R001446810015-1"

"APPROVED FOR RELEASE: 09/19/2001 CIA-RDP86-00513R001446810015-1

SAKOVICH, G.P.

Single form of adequate conditions of attraction on stable distribution in single form [with summary in German]. Teor.veroiat. i ee prim. 1 no.3:357-361 '56. (MLRA 10:1)
(Probabilities)

APPROVED FOR RELEASE: 09/19/2001 CIA-RDP86-00513R001446810015-1"

"APPROVED FOR RELEASE: 09/19/2001 CIA-RDP86-00513R001446810015-1

Sakovich, G.N.

SAKOVICH, G.N.

List of mathematical literature published in the Ukraine in 1956.
Ukr.mat.zhur. 9 no.2:230-231 '57. (MIRA 10:7)
(Bibliography--Mathematics) (Ukraine--Mathematics)

APPROVED FOR RELEASE: 09/19/2001 CIA-RDP86-00513R001446810015-1"

"APPROVED FOR RELEASE: 09/19/2001 CIA-RDP86-00513R001446810015-1

SAKOVICH, G.N.

List of mathematics literature published in the Ukraine in 1956-1967.
Ukr.mat.zhur. 10 no.1:107-111 '58. (MIRA 11:4)
(Bibliography--Mathematics)

APPROVED FOR RELEASE: 09/19/2001 CIA-RDP86-00513R001446810015-1"

"APPROVED FOR RELEASE: 09/19/2001 CIA-RDP86-00513R001446810015-1

AUTHOR: Sakovich, G.N. (compiler) SOV/41-10-2-13/13

TITLE: Index of the Mathematic Literature Published in the Ukraine in 1956-57 (Spisok literatury po matematike, izdannoy na Ukraine v 1956-57 gg. (Sostavil G.N.Sakovich))

PERIODICAL: Ukrainskiy matematicheskiy zhurnal,1958,Vol 10,Nr 2, pp 231-232 (USSR)

ABSTRACT: This is a continuation of the index started in volume 9,Nr 1. It includes 18 titles (books and collected volumes, the latter ones are given with a table of contents).

1. Mathematics--Indexes

Card 1/1

APPROVED FOR RELEASE: 09/19/2001 CIA-RDP86-00513R001446810015-1"

"APPROVED FOR RELEASE: 09/19/2001 CIA-RDP86-00513R001446810015-1

AUTHOR: Sakovich, G.N. SOV/41-10-3-14/14

TITLE: Register of Mathematical Literature Published in the Ukraine From 1956 to 1958 (Spisok literatury po matematike, izdannoy na Ukraine v 1956 - 58 gg)

PERIODICAL: Ukrainskiy matematicheskiy zhurnal, 1958, Vol 10, Nr 3, p 347 (USSR)

ABSTRACT: The author gives a list of 10 papers of mathematical contents which were published in 1957 in different periodicals. This list is incomplete and is to be continued in future issues of this periodical.

Card 1/1

APPROVED FOR RELEASE: 09/19/2001 CIA-RDP86-00513R001446810015-1"

"APPROVED FOR RELEASE: 09/19/2001 CIA-RDP86-00513R001446810015-1

16(1)

AUTHOR: Sakovich, G.N. SOV/41-11-1-12/12

TITLE: List of Mathematical Literature Published in the Ukraine

PERIODICAL: Ukrainskiy matematicheskiy zhurnal, 1959, Vol 11, Nr 1, pp 115-117 (USSR)

ABSTRACT: The author enumerates non-periodic publications in which there appeared papers on mathematics. The following authors are mentioned: Portnoy Kh.A., Krivoshey V.D., Borovskiy P.V., Sorokin P.I., Krukovskiy B.V.(Krukovskiy-Sinevich), Gal'perin I.M., Osipov P.N., Kaplan S.A., Kolodiy B.I., Kravchuk A.N., Gayda R.P., Mindyuk O.K., Kobilyans'kiy V.B., Sen'kiv M.T., Porfir'yev V.V., Pesin I.N., Grach S.A., Gestrin G.N., Grilits'kiy D.V., Skorobogat'ko V.Ya., Kostovskiy A.N., Garkavi A.L., Zoriy L.M., Sheremet'yev M.P., Khleonikov D.G., Fleyshman N.P., Tul'chiy V.I., Zagorskiy T.Ya., Lyantse V.E., Slonivs'kiy R.V., Ignat'yev M.A., Kazimirskiy P.S., Bardin P.I., Kulebakin V.S., Kardashov A.A., Kopeykin Iu.D., Levitskiy B.F., Seyfullin R.S., Stolyarchuk V.F., Vladimirov L.P., Khaskind M.D., Khomenko V.S., Shved G.L., Sasskiy K.F., Geronimus Ya.L., Arson L.D.,

Card 1/2

APPROVED FOR RELEASE: 09/19/2001 CIA-RDP86-00513R001446810015-1"

"APPROVED FOR RELEASE: 09/19/2001 CIA-RDP86-00513R001446810015-1

List of Mathematical Literature Published in the Ukraine SOV/41-11-1-12/12

Zaydenvarg M.A., Golinskiy B.L., Khlebutin N.V., Butayev G.M., Semenov V.Ye., Kondratenko V.M., Yakovlev V.A., Kalyush A.V., Simonov N.I., Belyayev N.G., Nesterenko M.I., Vedenyapin D.V., Vakarchuk B.S., Ustimenko M.P., Markov O.O., Sergeyev S.O.

Card 2/2

USCOMM-DC-61,477

APPROVED FOR RELEASE: 09/19/2001 CIA-RDP86-00513R001446810015-1"

"APPROVED FOR RELEASE: 09/19/2001 CIA-RDP86-00513R001446810015-1

SAKOVICH, G.N.

List of mathematics literature published in the Ukraine during 1957-1958. Ukr.mat.zhur. 11 no.2:226-228 '59.
(MIRA 12:11)

(Bibliography--Mathematics)

APPROVED FOR RELEASE: 09/19/2001 CIA-RDP86-00513R001446810015-1"

"APPROVED FOR RELEASE: 09/19/2001 CIA-RDP86-00513R001446810015-1

16(1)

AUTHOR: Sakovich, G.N. SOV/41-11-3-14/16

TITLE: Index of Mathematical Literature Published in 1957-1958 in the Ukraine

PERIODICAL: Ukrainskiy matematicheskiy zhurnal, 1959, Vol 11, Nr 3, pp 333-335 (USSR)

ABSTRACT: The author mentions the papers of the following authors with an enumeration of the place of publication: Nikulin, N.A., Chub, T.A., Skrydlov, V.N., Kolesnikov, O.N., Sametskaya, I.Ye., Borovik, V.N., Yes'kov, V.G., Kreynin, Ya.L., Kamenskiy, N.P., Badal'yan, R.G., Zaretskaya, K.A., Zukhovitskiy, S.I., Leonova, V.B., Kostyuk, A.I., Dzyadyk, V.K., Kostar'ov, A.I., Malyarov, V.V., Astryab, O.M., Shvetsov, K.I., Filippov, A.P., Goloskokov, Ye.G., Bogomolov, S.I., Babakova, O.I., Burlakov, A.V., Korsunskiy, M.I., Bazakutsa, V.A., Zil'berman, G.Ye., Itskovich, F.I., Kuznetskiy, R.S., Korolev, N.I., Yuditskiy, M.M., Khizhnyak, N.A., Shestopalov, V.P., Kondrat'yev, B.V., Bulgakov, B.M., Slyusarskiy, V.A., Sitenko, A.G., Stepanov, K.N., Dolgopolov, D.G., Bass, F.G., Kaganov, M.I., Prokhoda, I.G., Volkov, D.V., Aleksin, V.F., Rozumenko, S.B., Lomsadze, Yu.M., Maksimov, B.I., Shkoda-Ul'yanov, V.A., Lend'yel, V.I., Krivskiy, I.Yu., Kuruts, I.Yu., Tarabiy, M.I., Gomonay, V.I., Parlag, A.M., Sikora, D.I., Koval'chuk, A.Ye., Studnev, Yu.P.

Card 1/1

APPROVED FOR RELEASE: 09/19/2001 CIA-RDP86-00513R001446810015-1"

"APPROVED FOR RELEASE: 09/19/2001 CIA-RDP86-00513R001446810015-1

16(1) 05788

AUTHOR: Sakovich, G.N. SOV/41-11-4-14/15

TITLE: Index of Mathematical Papers Published in the Ukraine 1957-1959

PERIODICAL: Ukrainskiy matematicheskiy zhurnal, 1959, Vol 11, Nr 4, pp 456-459 (USSR)

ABSTRACT: This is an index of the papers published in the Ukraine in 1957-1959 by the following authors: Sharapov, M.I., Olonichev, P.M., Tverdokhlebov, V.I., Agranovich, V.M., Gerashchenko, O.A., Nazarchuk, M.M., Virozub, I.Ye., Pol'skiy, N.I., Gal'perin, I.M., Sokolov, N.P., Sukhomel, G.I., Fil'chakov, P.F., Yesipenko, N.P., Mitropol'skiy, Yu.O., Filonenko, I.N., Bondarenko, P.S., Kushnirenko, A.N., Lyashko, I.I., Korniyenko, V.T., Mikhalevich, V.S., Skorokhod, A.V., Tereshchenko, M.I., Pakhareva, N.O., Kiyashko, A.M., Podshevkin, Yu.V., Tarnopol'skiy, S.G., Dobrogay, M.I., Galetov, I.P., Mirak'yan, G.M., Gavrilov, N.I., Matveyenko, T.I., Bobrov, A.A., Grabovskaya, R.G., Kiro, S.N., Panich, O.I., Storozhenko, E.A., Kononov, V.A., Sinyukov, N.S., Kaspar'yants, A.A., Kononov, V.O., Starozhenko, Ye.A., Grabovskaya, R.G., Kochura, O.I., Lobodzinskaya, I.G., Lomsadze, Yu.M., Lend'yel, V.I., Krivskiy, I.Yu., Ayzenberg, N.N., Studnev, Yu.P., Gol'dberg, A.A., Berman, S.D., Maksimov, B.I., Dubrovka, V.M., Sivulich, I.M., Tsibere, I.M., Koval'chuk, A.Ye.,

Card 1/2

APPROVED FOR RELEASE: 09/19/2001 CIA-RDP86-00513R001446810015-1"

"APPROVED FOR RELEASE: 09/19/2001 CIA-RDP86-00513R001446810015-1

GUDYMENKO, F.I. [Hudymenko, F.S.]; POGREBYSSKIY, I.B. [Pohrebys'kyi, I.B.]; SAKOVICH, G.N. [Sakovych, H.N.]; CHAYKOVSKIY, N.A. [Chaikovs'kyi, M.A.]; SHTOKALO, I.Z., akademik, otv.red.; RAK, L.K., red.-leksikograf; BUNIY, R.O., tekhn.red.

[Russian-Ukrainian mathematics dictionary; 12000 words] Russko-ukrainskii matematicheskii slovar'; 12000 terminov. Izd-vo Akad. nauk USSR, 1960. 162 p. (MIRA 13:7)

1. AN USSR (for Shtokalo).
(Mathematics--Dictionaries)
(Russian language--Dictionaries--Ukrainian)

APPROVED FOR RELEASE: 09/19/2001 CIA-RDP86-00513R001446810015-1"

"APPROVED FOR RELEASE: 09/19/2001 CIA-RDP86-00513R001446810015-1

SAKOVICH, G.N. (Kiyev)

Multidimensional stable distributions. Teor. veroiat. i ee prim. 5 no.2:254 '60. (MIRA 13:9)
(Distribution (Probability theory))

APPROVED FOR RELEASE: 09/19/2001 CIA-RDP86-00513R001446810015-1"

"APPROVED FOR RELEASE: 09/19/2001 CIA-RDP86-00513R001446810015-1

SAKOVICH, G.N.

List of books and articles on mathematics published in the Ukraine in 1958 and 1959. Ukr. mat. zhur. 12 no.2:226-229 '60. (MIRA 13:10)

(Bibliography--Mathematics)

APPROVED FOR RELEASE: 09/19/2001 CIA-RDP86-00513R001446810015-1"

"APPROVED FOR RELEASE: 09/19/2001 CIA-RDP86-00513R001446810015-1

SAKOVICH, G.N.

List of books and articles on mathematics published in the Ukraine in 1956 and 1957. Ukr.mat.zhur. 12 no.1:107-111 '60. (MIRA 13:10)
(Bibliography--Mathematics)

APPROVED FOR RELEASE: 09/19/2001 CIA-RDP86-00513R001446810015-1"

"APPROVED FOR RELEASE: 09/19/2001 CIA-RDP86-00513R001446810015-1

SAKOVICH, G.N.

Solution of a multivariate functional equation. Ukr.mat.zhur. 13 no.2:173-189 '61. (MIRA 14:8)
(Functional equations)

APPROVED FOR RELEASE: 09/19/2001 CIA-RDP86-00513R001446810015-1"

"APPROVED FOR RELEASE: 09/19/2001 CIA-RDP86-00513R001446810015-1

SAKOVICH, G.N. [Sakovych, H.N.]

Strictly stable n-dimensional Gaussian distributions with nonvanishing mathematical expectation. Dop. AN URSR no.2:166-169 '64. (MIRA 17:5)

1. Institut matematiki AN UkrSSR. Predstavleno akademikom AN UkrSSR Yu.A.Mitropol'skim [Mytropol's'kyi, IU.O.].

APPROVED FOR RELEASE: 09/19/2001 CIA-RDP86-00513R001446810015-1"

"APPROVED FOR RELEASE: 09/19/2001 CIA-RDP86-00513R001446810015-1

SAKOVICH, G.N. [Sakovych, H.N.]

Functional equations for sums of exponentials. Dop. AN URSR no. 6:714-718 '64. (MIRA 17:9)

1. Institut matematiki AN UkrSSR. Predstavleno akademikom AN UkrSSR Yu. A.Mitropol'skim [Mytropol's'kyi, IU.O.].

APPROVED FOR RELEASE: 09/19/2001 CIA-RDP86-00513R001446810015-1"

"APPROVED FOR RELEASE: 09/19/2001 CIA-RDP86-00513R001446810015-1

SAKOVICH, G.N. [Sakovych, H.N.]

Width of the spectrum. Part 1. Dop. AN URSR no.11:1427-1430 '65. (MIRA 18:12)

1. Institut matematiki AN UkrSSR.

APPROVED FOR RELEASE: 09/19/2001 CIA-RDP86-00513R001446810015-1"

"APPROVED FOR RELEASE: 09/19/2001 CIA-RDP86-00513R001446810015-1

KONYUKHOV, V.N.; SAKOVICH, G.S.; KRUPNOVA, L.V.; PUSHKAREVA, Z.V.

Synthesis and study of biologically active heterocyclic derivatives. Part 6: Some derivatives of 3,4-dihydropyrimidine. Zhur. org. khim. 1 no.8:1487-1489 Ag '65. (MIRA 18:11)

1. Ural'skiy politekhnicheskiy institut imeni Kirova.

APPROVED FOR RELEASE: 09/19/2001 CIA-RDP86-00513R001446810015-1"

"APPROVED FOR RELEASE: 09/19/2001 CIA-RDP86-00513R001446810015-1

SAKOVICH, G. V.

BOLDYREV, V.V.; SAKOVICH, G.V.; YAKOVLEV, L.K.

Using the trituration method in the analysis of multimetallic ores. Soob.o nauch.rab.chl.VKHO no.3:31 '53. (MIRA 10:10)
(Ores--Analysis)

APPROVED FOR RELEASE: 09/19/2001 CIA-RDP86-00513R001446810015-1"

"APPROVED FOR RELEASE: 09/19/2001 CIA-RDP86-00513R001446810015-1

BOLDYREV, V.V.; SAKOVICH, G.V.

Floating balance for the study of the kinetics of reactions including solids. Zhur.fiz.khim. 30 no.6:1416-1418 Je '56. (MLRA 9:10)

1. Tomskiy gosudarstvennyy universitet imeni V.V. Kuybysheva.
(Chemical reaction, Rate of) (Balance)

APPROVED FOR RELEASE: 09/19/2001 CIA-RDP86-00513R001446810015-1"

"APPROVED FOR RELEASE: 09/19/2001 CIA-RDP86-00513R001446810015-1

76-32-2-11/38

AUTHORS: Sakovich, G. V., Boldyrev, V. V.

TITLE: On the Catalysis by Solid Products During Topochemical Reactions (K voprosu o katalize tverdym produktom pri topokhimicheskikh reaktsiyakh)

PERIODICAL: Zhurnal Fizicheskoy Khimii, 1958, Vol. 32, Nr 2, pp.298-305 (USSR)

ABSTRACT: There is no uniform opinion on the autocatalytic effect of the product in topochemical reactions until now (References 1-5). It is pointed out that the conditions for the formation of the reaction nucleus and its form are mainly determined by the structure and the anisotropy of the lattice from the initial product. It is shown that all existing data clearly point out that the solid product has a catalytic effect on the velocity of thermal fission, and that the intensity of this effect depends on the state of the solid reaction product. The characteristic feature of autocatalysis in topochemical reactions is represented by the fact that the cata-

Card 1/3

APPROVED FOR RELEASE: 09/19/2001 CIA-RDP86-00513R001446810015-1"