"APPROVED FOR RELEASE: 08/25/2000 CIA-RDP86-00513R001446910003-3

S/044/62/000/010/003/042
B112/B102

AUTHOR: Freud, G., Sallay, M.

TITLE: Rate of convergence of expansion with respect to Sturm-Liouville eigenfunctions

PERIODICAL: Referativnyy zhurnal. Matematika, no. 10, 1962, 37, abstract 10B158 (Magyar tud. akad. Mat. kutató int. közl., v. 6, no. 3, 1961, 271 - 279 [French; summary in Rus.])

TEXT: Let $v_n(x)$ be the standard eigenfunctions of the differential equation $y'' + [\lambda - q(x)]y = 0$, which satisfy the conditions

$$\alpha_1 y(0) + \beta_1 y'(0) = 0, \qquad (1)$$
$$\alpha_2 y(\pi) + \beta_2 y'(\pi) = 0,$$

$$S_n(x,f) = \sum_{k=0}^{n} a_k v_k(x), \qquad a_k = \int_0^{\pi} f(x) v_k(x)\,dx.$$

Card 1/2

APPROVED FOR RELEASE: 08/25/2000 CIA-RDP86-00513R001446910003-3"

"APPROVED FOR RELEASE: 08/25/2000 CIA-RDP86-00513R001446910003-3

S/044/62/000/010/003/042
B112/B102

Rate of convergence of expansion...

The rate of convergence of $S_n(x,f)$ to $f(x)$ is investigated. In particular, theorem 2 is proved: Let be $f(x)$ and $q(x)$ r times continuously differentiable on $[0,\pi]$; $L^{(0)}f = f$, $L^{(1)}f = f'' - q(x)f$, $L^{(i)}f = L^{(1)}L^{(i-1)}(f)$, $i = 2,3,\ldots$; if $L^{(i)}f$ $(i = 0,1,\ldots, [(r-1)/2])$ satisfy the conditions (1), then

$$|f(x) - S_n(x, f)| < O\left(\frac{\log n}{n^r}\right)\left[\omega^2(f_0^{(r)} n^{-1}) + \frac{1}{n^2}\sum_{m=0}^{r} \|\ldots^{(m)}\| + \frac{1}{n}\max_{i=1,0} \|\delta^{(i)} f^{(m)}\|\right],$$

$$\delta^{(0)}f = \begin{cases} 0, & b_1 = 0, \\ \dfrac{f\left(\frac{\pi}{n}\right) - f(0)}{\frac{\pi}{n}} - f(0); & \text{если } b_1 \neq 0, \end{cases}$$

$$\delta^{(1)}f = \begin{cases} 0, & \text{если } b_2 = 0, \\ \dfrac{f(\pi) - f\left(\pi - \frac{\pi}{n}\right)}{\frac{\pi}{n}} - f'(\pi), & \text{если } b_2 \neq 0. \end{cases}$$

will be valid. [Abstracter's note: Complete translation.]

Card 2/2

APPROVED FOR RELEASE: 08/25/2000 CIA-RDP86-00513R001446910003-3"

"APPROVED FOR RELEASE: 08/25/2000 CIA-RDP86-00513R001446910003-3

SALLAY, Marianne, foeloado

Restoration of the group of historical monuments in Sopron.
Epites szemle 7 no.2:41-49 '63.

1. Orszagos Muemleki Felugyelosag.

APPROVED FOR RELEASE: 08/25/2000 CIA-RDP86-00513R001446910003-3"

"APPROVED FOR RELEASE: 08/25/2000 CIA-RDP86-00513R001446910003-3

SALLAY, M.

Data on a linear multidimensional approximation process. Mat kut kozl MTA 8 series A no. 3:347-354 '63('64).

APPROVED FOR RELEASE: 08/25/2000 CIA-RDP86-00513R001446910003-3"

"APPROVED FOR RELEASE: 08/25/2000 CIA-RDP86-00513R001446910003-3

SALLI, A.

SALLI, A.; MIRKIN, I.L., professor [translator]; GIL'BERG, L.A., redaktor; GLADKIKH, N.N., tekhnicheskiy redaktor.

[Metallic creep and heatresistant alloys] Polzuchest' metallov i zharoprochnye splavy. Perevod s angliiskogo i nauchnaia red. I.L.Mirkina. Moskva, Gos. izd-vo oboronnoi promyshlennosti, 1953. 290 p. (MLRA 7:8)

(Creep of metals) (Alloys)

APPROVED FOR RELEASE: 08/25/2000 CIA-RDP86-00513R001446910003-3"

"APPROVED FOR RELEASE: 08/25/2000 CIA-RDP86-00513R001446910003-3

MIROSHNICHENKO, I.S.; SALLI, I.V.

Lines of metastable equilibrium on binary system diagrams. Izv. vys. ucheb. zav.; chern. met. no.8:104-109 '60. (MIRA 13:9)

1. Dnepropetrovskiy gosudarstvennyy universitet.
(Alloys--Metallography) (Phase rule and equilibrium)

APPROVED FOR RELEASE: 08/25/2000 CIA-RDP86-00513R001446910003-3"

"APPROVED FOR RELEASE: 08/25/2000 CIA-RDP86-00513R001446910003-3

MIROSHNICHENKO, I.S. (Dnepropetrovsk); SALLI, I.V. (Dnepropetrovsk)

Structure of cast iron hardened in the liquid state. Izv. AN SSSR. Otd. tekh. nauk. Met. i topl. no.1:44-48 Ja-F '61. (MIRA 14:2)
(Cast iron—Metallography)
(Liquid metals—Hardening)

APPROVED FOR RELEASE: 08/25/2000 CIA-RDP86-00513R001446910003-3"

"APPROVED FOR RELEASE: 08/25/2000 CIA-RDP86-00513R001446910003-3

1ST AND 2ND ORDERS

PROCESSES AND PROPERTIES INDEX

3RD AND 4TH ORDERS

SALLI, I. [V.]

ca

9

Transformations in eutectic copper-tin alloys. V. I. Isaichev and I. Salli. *J. Tech. Phys.* (U. S. S. R.) 10, 752-6(1940).—The appearance of the martensite phase was investigated at low temps., on the alloys contg. 24.0, 24.8, 25.0, 25.2, 25.4, 25.5, 26.0, 26.5% of Sn by wt. The β-phase can be transformed either into β′ or into β″, depending on the concn. of Sn. In the alloys contg. 24.0% Sn, almost pure β′ appears. In the alloys contg. 25.2% Sn (at the temp. of liquid air) both β and β″ phases are present. For the intermediate concns. there are β, β′ and β″ phases. The transformation of the β-phase into the martensite phases β′ and β″ is reversible.

Roksalana Gamow.

ASM-SLA METALLURGICAL LITERATURE CLASSIFICATION

APPROVED FOR RELEASE: 08/25/2000 CIA-RDP86-00513R001446910003-3"

"APPROVED FOR RELEASE: 08/25/2000 CIA-RDP86-00513R001446910003-3

SALLI, I.V.

Coalescence of finely reduced phases. Dop.AN URSR no.6:465-471 '50. (MLRA 9:8)

1. Dnipropetrovs'kiy derzhavniy universitet. Predstaviv diysniy chlen Akademii nauk Ukrains'koi RSR V.M. Svechnikov.
(Iron--Metallurgy)

APPROVED FOR RELEASE: 08/25/2000 CIA-RDP86-00513R001446910003-3"

"APPROVED FOR RELEASE: 08/25/2000 CIA-RDP86-00513R001446910003-3

SALLI, I.V.; SVYECHNIKOV, V.M., diysnyy chlen.

Coalescence of carbon impurities in tempering wrought iron. Dop.AN URSR no.5:358-363 '51. (MLRA 6:9)

1. Akademiya nauk Ukrayins'koyi RSR (for Svyechnikov). 2. Dnipropetrovs'kyy derzhavnyy universytet (for Salli). (Wrought iron)

APPROVED FOR RELEASE: 08/25/2000 CIA-RDP86-00513R001446910003-3"

"APPROVED FOR RELEASE: 08/25/2000 CIA-RDP86-00513R001446910003-3

SALLI, I. V.

3

USSR

Coalescence of the cementite in carbon steel. I. V. Salli (State Univ., Dnepropetrovsk). *Dopovidi Akad. Nauk Ukr. R.S.R.* 1952, No. 4, 342-7(Russian summary); cf. *Dopovidi Akad. Nauk Ukr. R.S.R.* 1950, No. 6; 1951, No. 6.—Exptl. results are given on the kinetics of the coalescence of carbon steel in a vacuum furnace at const. temp. in the range: 360-765°. With the help of exptl. data and theoretical consideration the value of the surface tension on the boundary cementite-austenite and cementite-ferrite was calcd., according to the following equations: (1) $Z = Z_0[A + t/P(P - 1)]/[A + t(P - 1)]$. Z is the no. of cementite's grains in cc. (calcd. under microscope) obtained after thermal treatment during t sec.; Z_0 is the initial no. of cementite; P is the ratio of the initial no. of grains to the no. at the end of coalescence process. (2) $A = \pi^2 RT/6DC \sim Mv^2\sigma$ where x = av. distance between the cementite's grains; r = radius of grain in the initial sample; R = gas const., T = abs. temp.; D = diffusion coeff.; C = concn. of cementite in solid soln.; M = mol. wt. of cementite, σ = surface tension; v = sp. vol. of cementite. M. C.

M 3I

APPROVED FOR RELEASE: 08/25/2000 CIA-RDP86-00513R001446910003-3"

"APPROVED FOR RELEASE: 08/25/2000 CIA-RDP86-00513R001446910003-3

SALLI, I. V.

USSR/Metals - Cast Iron, Graphitization Apr 52

"Concerning the Kinetics of Cast-Iron Graphitization," K. P. Bunin, I. V. Salli, Dnepropetrovsk Metallurgical Inst imeni I. V. Stalin

"Dok Ak Nauk SSSR" Vol LXXXIII, No 6, pp 841, 842

Presents exptl data on graphitization of white cast iron during annealing in vacuo, directly corroborating that bottleneck of graphitizing process is that movement of Fe atoms with which origin and growth of graphite inclusions in cast iron are connected. Thus, outer surface and inner voids of specimens are places easily accessible to graphite formation. Illustrated by 2 micrographs. Submitted by Acad I. P. Bardin 29 Feb 52.

223T50

APPROVED FOR RELEASE: 08/25/2000 CIA-RDP86-00513R001446910003-3"

"APPROVED FOR RELEASE: 08/25/2000 CIA-RDP86-00513R001446910003-3

SALLI, I.V.

The formation of graphite on the surface of cast iron. I. V. Salli and P. Yu. Shul'diner. *Zhur. Tekh. Fiz.* 23, 212-6(1953).—The first graphite nuclei are formed on the grains having faces which have the least specific interfacial tension at the interface with unfavorably oriented austenite crystals. The fact that not all austenite crystals are covered with graphite may be due to anisotropic diffusion of C in austenite. Very little of any graphite already on the surface redissolves on reheating. Cyrus Feldman

62

1

APPROVED FOR RELEASE: 08/25/2000 CIA-RDP86-00513R001446910003-3"

"APPROVED FOR RELEASE: 08/25/2000 CIA-RDP86-00513R001446910003-3

SALLI, I.V.

USSR.

615. Theory of crystal growth. I. V. SALLI. Zh. éksper. teor. Fiz., 25, No. 2(8) [redacted] in Russian.

The rate of growth of an isolated centre of crystallization is calculated for the isothermal decomposition of a supersaturated solution or for the crystallization of a single-component system. The formula derived is $dq/dt = 4\pi D(\Delta - a/r)(1/x + 1/r)r^2$, where D is the coefficient of diffusion, Δ—the difference between the concentration (c) at the outer boundary of the (spherical) zone of the solution, which becomes poorer in the solute, and that ($c\sim$) in the mother liquor for the case of plane interface, r and x—the inner radius and wall thickness of the hollow sphere involved, respectively, and $a = 2\sigma Mvc\sim/RT$, where σ is the surface tension of the growing crystal at the crystal/solution interface, M—the molecular weight of the crystallizing substance, and v—its specific volume. The analysis of causes which determine different forms of crystal growth reveals the following 3 main growth factors: (1) the growth rate varies as the true value of supercooling or supersaturation, the latter increasing as the radius of curvature of the front of crystallization increases; (2) the amount of substance, diffusing toward the front of crystallization, depends on the radius ratio of the inner and outer spheres; and (3) the increase of the difference between the two radii increases the thickness of the layer through which the substance diffuses (and heat is removed).

I. FACHMAN

Dnepropetrovsk State Univ.

RB

APPROVED FOR RELEASE: 08/25/2000 CIA-RDP86-00513R001446910003-3"

"APPROVED FOR RELEASE: 08/25/2000 CIA-RDP86-00513R001446910003-3

SALLI, I.V.

General and Physical Chemistry

2

The theory of decomposition of supersaturated solutions. I. V. Salli (Dnepropetrovsk State Univ.). *Doklady Akad. Nauk S.S.S.R.* 89, 61-4(1953)(Engl. translation issued by Natl. Sci. Foundation, Wash., D.C. as NSF-tr-24, 4 pp. (June, 1953)).—A math. expression is derived for the rate of growth of a crystal from a supersatd. soln. The theory accounts for the shape assumed by the crystals during various stages of growth. The theory is applied to the growth of crystals in ferrocarbon alloys. Don T. Cromer

APPROVED FOR RELEASE: 08/25/2000 CIA-RDP86-00513R001446910003-3"

"APPROVED FOR RELEASE: 08/25/2000 CIA-RDP86-00513R001446910003-3

SALI, I. V.

1167 (Formation of Graphite on the Surface of Steel During Heat Treatment Under Vacuum.) Obrazovanie grafita na poverkhnosti stali pri termoobrabotke v vakuume. E. Z. Graifer and I. V. Salli. *Doklady Akademii Nauk SSSR*, v. 91, no. 4, Aug. [illegible] 663-665.

Importance of Si as an alloying element in graphitization of steels and wrought irons. Micrographs, graph. 5 ref.

37

APPROVED FOR RELEASE: 08/25/2000 CIA-RDP86-00513R001446910003-3"

"APPROVED FOR RELEASE: 08/25/2000 CIA-RDP86-00513R001446910003-3

Salii, L. V.

Furnace for Studying the Structure of Alloys by Heat Treatment in a Vacuum. I. I. Pyasetskii and L. V. Salii. *Zavodskaya Laboratoriya*, 1955, 21, (2), 243. [In Russian].

A vacuum furnace is described with which the structure of a metal surface during crystallization from the liquid state can be studied. A photomicrograph of a hypereutectoid steel surface is shown.—S. E.

Dnepropetrovsk State U.

APPROVED FOR RELEASE: 08/25/2000 CIA-RDP86-00513R001446910003-3"

"APPROVED FOR RELEASE: 08/25/2000 CIA-RDP86-00513R001446910003-3

SALLI, I. V.

Salli, I. V.: "Work on certain problems in the theory of crystallization and transformations in ferrocarbon alloys." Min Higher Education Ukrainian SSR. Khar'kov Order of Labor Red Banner State U imeni Gor'kiy. Khar'kov, 1956. (Dissertation for the Degree of Doctor in Physicomathematical Science)

So: Knizhnaya Letopis', No 27, 1956. Moscow. Pages 94-109; 111

APPROVED FOR RELEASE: 08/25/2000 CIA-RDP86-00513R001446910003-3"

"APPROVED FOR RELEASE: 08/25/2000 CIA-RDP86-00513R001446910003-3

SALLI, I.V.; PYASETSKIY, I.I.

Graphitization of low-carbon steels. Fiz.met.i metalloved 3 no.3:513-515 '56. (MLRA 10:3)

1. Dnepropetrovskiy gosudarstvennyy universitet.
(Steel—Metallography)

APPROVED FOR RELEASE: 08/25/2000 CIA-RDP86-00513R001446910003-3"

"APPROVED FOR RELEASE: 08/25/2000 CIA-RDP86-00513R001446910003-3

SALLI I.V. (Dnepropetrovsk).

Theory of the graphitization of cast iron and steel. Izv.AN SSSR. Otd.tekh.nauk no.12:106-116 D '56. (MIRA 10:1)

1. Dnepropetrovskiy gosudarstvennyy universitet.
(Cast iron--Metallography)
(Steel--Metallography)

APPROVED FOR RELEASE: 08/25/2000 CIA-RDP86-00513R001446910003-3"

"APPROVED FOR RELEASE: 08/25/2000 CIA-RDP86-00513R001446910003-3

SALLI, I. V.

137-58-3-5847

Translation from: Referativnyy zhurnal, Metallurgiya, 1958, Nr 3, p 197 (USSR)

AUTHORS: Salli, I. V., Finagina, Ye. V.

TITLE: The Rate of Growth of Ferrite Grains (Skorost' rosta ferritnogo zerna)

PERIODICAL: Nauchn. zap. Dnepropetr. un-t, 1956, Vol 45, pp 51-53

ABSTRACT: The rate of growth of ferrite grains was experimentally determined for steels containing 0.15 percent C, 0.3 percent C, and 0.45 percent C. Specimens in the form of a half-moon with a 6 mm radius were cut from plates 3 mm thick. The specimens were heated in Pb baths. A specimen was initially maintained for a period of 20 minutes in a bath of approximately 900°C and was then transfered into a 730° bath where the growth of ferrite crystallization centers took place. After quenching in water, cleansing, and etching, the average size of the largest grains was measured in a direction perpendicular to the boundary of austenite grains. By means of comparing the rate of grain growth, calculated theoretically by Salli (RzhKhim, 1956, Nr 14, abstract 42512) and also determined experimentally, it is shown that the theory of decomposition of supersaturated solid solutions is

Card 1/2

APPROVED FOR RELEASE: 08/25/2000 CIA-RDP86-00513R001446910003-3"

"APPROVED FOR RELEASE: 08/25/2000 CIA-RDP86-00513R001446910003-3

137-58-5847

The Rate of Growth of Ferrite Grains

applicable to the γ Fe $\rightarrow$ α Fe transformation only in cases of small degrees of supercooling and relatively large concentrations of C.

V. R.

Card 2/2

APPROVED FOR RELEASE: 08/25/2000 CIA-RDP86-00513R001446910003-3"

"APPROVED FOR RELEASE: 08/25/2000 CIA-RDP86-00513R001446910003-3

SALLI, I.V.

USSR / Physical Chemistry - Surface Phenomena, Adsorption, Chromatography, Ion Interchange. B-13

Abs Jour : Referat. Zhurnal Khimiya, No.1, 1958, 597.

Author : I.V. Salli.

Inst : Dnepropetrovsk University.

Title : Kinetics of Coalescence and Determination of Surface Tension of Solid Phase Boundary.

Orig Pub : Nauchn. zap. Dnepropetr. un-ta, 1956, 45, 55 - 59.

Abstract : The coagulation process of dispersion phase particles at the expense of the sublimation of substance from minute to large particles taking place in the solid phase, for example in an alloy, was examined. The growth of the mean radius of particles (P) in time is described by the empirical equation $r = (r_o + at) / [1 \ (at/r_m)]$ (1), where a is

Card: 1/3

APPROVED FOR RELEASE: 08/25/2000 CIA-RDP86-00513R001446910003-3"

"APPROVED FOR RELEASE: 08/25/2000 CIA-RDP86-00513R001446910003-3

USSR / Physical Chemistry - Surface Phenomena, Adsorption, Chromatography, Ion Interchange. B-13

Abs Jour : Referat. Zhurnal Khimiya, No.1, 1958, 597.

Abstract : constant, r_m is the mean radius of P at the moment, at which the process discontinues. Using Thomson's equation, the equation of diffusion from minute P to large and the relation (1), the author deduces the equation for the computation of the interphase tension δ on the grain boundary $\delta = \sqrt{aRTR_o^2 r_o b/2DMv^2C} \cdot (R_o - r_o)(B + 1)/\sqrt{1 - (R_o/r_m)}$ (2), where R_o and r_o are the initial radii of large and minute particles, M, v, D and C are molecular weight, molecular volume, diffusion factor and the substance concentration in the dispersion phase, and b is a constant determined by the initial distribution of grains according to their size. The magnitude of δ = 13.2 dynes per cm was computed using experimental data of coalescence kinetics of cementite in hypoeutectiod steel with 0.45% of C and 630°. The value of 7.0 to 9.8 dynes per cm, independing of the C

Card: 2/3

APPROVED FOR RELEASE: 08/25/2000 CIA-RDP86-00513R001446910003-3"

"APPROVED FOR RELEASE: 08/25/2000 CIA-RDP86-00513R001446910003-3

USSR / Physical Chemistry - Surface Phenomena, Adsorption, Chromatography, Ion Interchange. B-13

Abs Jour : Referat, Zhurnal Khimiya, No.1, 1958, 597.

Abstract : content in steel, was received for on the boundary between cementite and ferrite by measuring the grain size of globular cementite in steels with 0,64 to 1,16% of C.

Card: 3/3

APPROVED FOR RELEASE: 08/25/2000 CIA-RDP86-00513R001446910003-3"

"APPROVED FOR RELEASE: 08/25/2000 CIA-RDP86-00513R001446910003-3

SALLI, I. V.

USSR / Physical Chemistry - Surface Phenomena, Adsorption, Chromatography, Ion Interchange. B-13

Abs Jour : Referat. Zhurnal Khimiya, No.1, 1958, 598.

Author : V.I. Psarev, I.V. Salli.

Inst : Dnepropetrovsk University.

Title : Coalescence Kinetics and Determination of Surface Tension of Solid Phase Boundary. Surface Tension of Cementite of Boundary with Austenite and Ferrite.

Orig Pub : Nauchn. zap. Dnepropetr. un-ta, 1956, 45, 61 - 67.

Abstract : The change of the mean radius of golbular cimentite particles in steels kept in a vacuum furnace or lead bath was studied experimentally. The magnitude of of cementite on the boundary with austenite and ferrite was computed for a wide temperature range by the method proposed

Card: 1/2

APPROVED FOR RELEASE: 08/25/2000 CIA-RDP86-00513R001446910003-3"

"APPROVED FOR RELEASE: 08/25/2000 CIA-RDP86-00513R001446910003-3

USSR / Physical Chemistry - Surface Phenomena, Adsorption, Chromatography, Ion Interchange. B-13

Abs Jour : Referat. Zhurnal Khimiya, No.1, 1958, 598.

Abstract : earlier (see the foregoing abstract). The smaller value of cementite on the ferrite boundary than on the austenite boundary is explained by a less dense atom packing in ferrite. rises at the introduction of a carbide producing element (Cr, Ti); the introduction of an element, which does not produce any carbide, decreases the magnitude.

Card: 2/2

APPROVED FOR RELEASE: 08/25/2000 CIA-RDP86-00513R001446910003-3"

"APPROVED FOR RELEASE: 08/25/2000 CIA-RDP86-00513R001446910003-3

Salli, I. V.

AUTHORS: Psarev, V. I., and Salli, I. V. 126-2-12/35

TITLE: Coalescence of finely dispersed particles and determination of the surface tension at the boundary of solid phases. (Koalestsentsiya melkodispersnykh chastits i opredeleniye poverkhnostnogo natyazheniya na granitse tverdykh faz).

PERIODICAL: Fizika Metallov i Metallovedeniye, 1957, Vol. 5, No. 2, pp. 268-278 (USSR)

ABSTRACT: Coalescence is a process of coarsening of the particles (grains or crystals) of the disperse phase brought about by displacement of matter from the small particles to the larger ones. This process is of great importance during tempering of hardened steels, during heat treatment of etching alloys, etc. An attempt to describe quantitatively this process has been made in earlier work of the authors of this paper and also of other authors (Refs. 4-7,9). It is known from thermodynamics that, in the case of coalescence, the change in the free energy of the system ΔF is proportional to the change of the total surface of division between the phases and $\Delta F = \sigma \Delta s$, whereby the coefficient σ represents the specific free energy on the surface of division of two phases. The fundamental relations of the molecular-kinetic theory of phase

Card 1/7

APPROVED FOR RELEASE: 08/25/2000 CIA-RDP86-00513R001446910003-3"

"APPROVED FOR RELEASE: 08/25/2000 CIA-RDP86-00513R001446910003-3

126-2-12/22

Coalescence of finely dispersed particles and determination of the surface tension at the boundary of solid phases.

a better agreement between this formula and the experimental results, the authors of this paper introduce decelerating term of the rate of growth thus obtaining Eq.(1), p.269. The deviation of the coagulating system from the equilibrium position can be characterized by a linear speed of growth of the average dimension of coarsening particles at a given instant of time. However, with the progress of time the particles grow bigger and the speed of growth will decrease and tend to become zero. In earlier work of one of the authors (Ref.7), a formula was proposed for calculating the average dimension of the particles which contains a term with an exponential dependence on time. An equation is also derived for calculating the surface tension σ at the boundary of solid phases, Eq.(7), p.271. If experimental data are available enabling plotting the dependence of the average radius of the disperse phase particles on the duration of isothermal annealing (Fig.1, p.70), it is possible on the basis of the here derived relation to evaluate the surface tension at the boundary of solid phases. For verifying the proposed formula the authors

Card 3/7

APPROVED FOR RELEASE: 08/25/2000 CIA-RDP86-00513R001446910003-3"

"APPROVED FOR RELEASE: 08/25/2000 CIA-RDP86-00513R001446910003-3

126-2-12/35

Coalescence of finely dispersed particles and determination of the surface tension at the boundary of solid phases.

used the experimental data of Bokshteyn , S.Z. (Ref.3), Schimura, S. et alii (Ref.8); the basic data extracted from the experimental results of these authors, which are necessary for calculating the surface tension, are entered in Table 1, p.272. In addition, the method of calculation is verified on extensive experimental data which permits determining the surface tension at the boundaries graphite-austenite, carbide-austenite and carbide-ferrite. The process of coalescence of graphite particles in iron was investigated on two groups of specimens, the first consisting of iron with a nearly eutectoidal content of admixtures, i.e., 1% Si, 0.3% Mn, 0.15% P and 0.1% S, the second was prepared from pure synthetic iron with the same C and Si contents as for the first group but having a minimum content of the other admixtures. The experimental technique was described in an earlier paper (Ref.6). Tables 2 and 3 give the data on the dependence of the numbers of grains per unit of volume on the time and temperature of annealing of various specimens of malleable iron. The

Card 4/7 results are entered into tables and they are discussed

APPROVED FOR RELEASE: 08/25/2000 CIA-RDP86-00513R001446910003-3"

"APPROVED FOR RELEASE: 08/25/2000 CIA-RDP86-00513R001446910003-3

126-2-12/35

Coalescence of finely dispersed particles and determination of the surface tension at the boundary of solid phases.

in some detail. The data contained in the paper justify the assumption that the presented method for determining the order of magnitude of surface tension at the boundary of the solid phases is fully satisfactory and this view is supported by a number of facts. The same value was obtained for the surface tension of cementite at the boundary with ferrite by determining it from three different sources. For the steel Y-8 at 650°C σ = 15 dyn/cm, for below-eutectoidal steel at 630°C Bokshteyn (Ref.3) obtained σ = 13.2 dyn/cm, whilst for steels with various carbon contents at 720°C Schimura et alii (Ref.8) quoted the value σ = 7.5 dyn/cm. If the temperature is taken into consideration these values can be considered as being fully in agreement. According to Schimura et alii (Ref.8) the surface tension of cementite at the boundary with ferrite remains constant when changing the carbon concentration. For all the investigated alloys the magnitude of the surface tension decreases with increasing temperature, whereby the decrease is almost inversely proportional with the solubility of the disperse phase in the mother phase (in the temperature

Card 5/7

APPROVED FOR RELEASE: 08/25/2000 CIA-RDP86-00513R001446910003-3"

"APPROVED FOR RELEASE: 08/25/2000 CIA-RDP86-00513R001446910003-3

126-2-12/35

Coalescence of finely dispersed particles and determination of the surface tension at the boundary of solid phases.

range where no phase transformations occur). The surface tension of cementite at the boundary with austenite is almost five times lower than the surface tension of graphite at the boundary with austenite. This fact is confirmed by phenomena which accompany solidification of iron. Investigation of alloy steels showed that for a relatively small content of the alloying element, of the order of 2%, the order of magnitude of the surface tension does not change. However, a definite tendency towards increasing can be observed in the surface tension of carbide bounding on ferrite on introducing carbide forming elements (Cr,Ti) and a tendency can be observed towards lowering of the surface tension on introducing non-carbide forming elements, cobalt for instance. The obtained values of surface tension appear reasonable also as regards the determined size of the critical germination nucleus during phase transformation, for instance for steel containing 1.2% C and super-cooled to 50°C below the A_1 point, the critical size of the cementite germ is about 10^{-7} cm, which is a fully realistic value for such undercooling.

Card 6/7

APPROVED FOR RELEASE: 08/25/2000 CIA-RDP86-00513R001446910003-3"

"APPROVED FOR RELEASE: 08/25/2000 CIA-RDP86-00513R001446910003-3

126-2-12/35

Coalescence of finely dispersed particles and determination of the surface tension at the boundary of solid phases.

There are 4 figures, 10 tables and 10 references, 8 of which are Slavic.

SUBMITTED: October 11, 1955 (Initially), April 10, 1957 (after revision.)

ASSOCIATION: Dnepropetrovsk State University. (Dnepropetrovskiy Gosudarstvennyy Universitet).

AVAILABLE: Library of Congress.

Card 7/7

APPROVED FOR RELEASE: 08/25/2000 CIA-RDP86-00513R001446910003-3"

"APPROVED FOR RELEASE: 08/25/2000 CIA-RDP86-00513R001446910003-3

AUTHORS: L'nyanoy, V. N., Salli, I. V. SOV/163-58-3-43/49

TITLE: The Formation of a Graphite Layer at the Surface of Hypereutectoid Alloyed Steels (Obrazovaniye grafitnykh pokrytiy na poverkhnosti zaevtektoidnoy legirovannoy stali)

PERIODICAL: Nauchnyye doklady vysshey shkoly. Metallurgiya, 1958, Nr 3, pp 253-257 (USSR)

ABSTRACT: The influence of the alloyed elements V, Cr, Mo, W, Ni and Si on the process of separation of graphite and austenite was investigated in vacuum. The numerous investigations of the graphitization of the alloy surface by means of thermal treatment in vacuum proved that the graphite separated to the surface may be used as indicator of the graphitization capability of the alloys. The influence of vanadium may be determined from the fact that in alloys with 2% of vanadium the graphitization is completely absent. The micrographs taken with the electron microscope prove that in alloys with increased vanadium content the graphite separation at the surface of the sample slows down and at 2% completely stops.
Also the influence of chromium causes a slowing down of the graphite separation at the surface, which then at 2% of chromium

Card 1/2

APPROVED FOR RELEASE: 08/25/2000 CIA-RDP86-00513R001446910003-3"

"APPROVED FOR RELEASE: 08/25/2000 CIA-RDP86-00513R001446910003-3

The Formation of a Graphite Layer at the Surface of Hypereutectoid Alloyed Steels SOV/163-58-3-43/49

stops completely.
Also molybdenum has a retarding effect on graphitization, however, to a lesser degree than vanadium and chromium.
An increase of the degree of dispersion of graphite is characteristic of the effect of tungsten.
Cobalt, nickel and silicon as alloying additions in the steels increase the capability of graphitization at the surface.
The effect of the alloying elements on the separation process of graphite from austenite is based on a change of the reciprocal position of the equilibrium lines E'S' and ES in the phase diagram of Fe-C, whereby the ratio between the rate of growth of the graphite and cementite seeds at the surface is changed.
There are 4 figures and 8 references, all of which are Soviet.

ASSOCIATION: Dnepropetrovskiy gos. universitet (Dnepropetrovsk State University)

SUBMITTED: October 1, 1957

Card 2 2

APPROVED FOR RELEASE: 08/25/2000 CIA-RDP86-00513R001446910003-3"

"APPROVED FOR RELEASE: 08/25/2000 CIA-RDP86-00513R001446910003-3

AUTHOR: Salli, I. V. 78-3-4-16/38

TITLE: Some Regularities in the Occurrence of Metastable Systems in Fe-C-Alloys and the Transition of These Systems to Stable State (Nekotoryye zakonomernosti vozniknoveniya metastabil'nykh sistem Fe-C splavov i perekhod etikh sistem v stabil'noye sostoyaniye)

PERIODICAL: Zhurnal Neorganicheskoy Khimii, 1958, Vol. 3, Nr 4, pp. 924-933 (USSR)

ABSTRACT: This paper is a summary of the experimental results on phase transformations occurring on the surface of steel and cast iron during their thermal treatment in vacuum. Experiments for the determination of some general regularities in connection with the occurrence of metastable phases in the system Fe-C are mentioned. The transition of metastable systems (cementite-austenite, cementite-ferrite) to stable systems occurs when the graphite nucleus in the alloys is present in stable state. The effect of additions in high-carbon alloys was investigated. The author also investigated the effect of Cr, V, W, Mo, Si, Co and N. The experiments showed that Cr, V and Mo completely obstruct the separation of graphite on the surface of steel.

Card 1/2

APPROVED FOR RELEASE: 08/25/2000 CIA-RDP86-00513R001446910003-3"

"APPROVED FOR RELEASE: 08/25/2000 CIA-RDP86-00513R001446910003-3

Some Regularities in the Occurrence of Metastable Systems in Fe-C-Alloys and the Transition of These Systems to Stable State 78-3-4-16/38

Si, Co and N increase the formation of graphite. W till 4% has a smaller influence on the graphitization process. Fundamental changes in the mechanism and the kinetics of the conversion of martensite were carried out. The transition of the system martensite-austenite to a stable system, graphite--ferrite, only occurs in cases where stable graphite nuclei are present in the system.
On strong undercooling of the solutions austenite occurs. The formation of metastable supersaturated solutions and their velocity of growth depends on their supersaturation. There are 5 figures, 2 tables, and 14 references, 13 of which are Soviet.

ASSOCIATION: Dnepropetrovskiy gosudarstvennyy universitet (Dnepropetrovsk State University)

SUBMITTED: June 25, 1957

Card 2/2

APPROVED FOR RELEASE: 08/25/2000 CIA-RDP86-00513R001446910003-3"

"APPROVED FOR RELEASE: 08/25/2000 CIA-RDP86-00513R001446910003-3

IT V. SALLI

AUTHOR: Gulyayev, B.B. SOV/24-58-4-37/39

TITLE: Conference on Crystallisation of Metals (Soveshchaniye po kristallizatsii metallov)

PERIODICAL: Izvestiya Akademii Nauk SSSR, Otdeleniye Tekhnicheskikh Nauk, 1958, Nr 4; pp 153 - 155 (USSR)

ABSTRACT: This conference was held at the Institut mashinovedeniya AN SSSR (Institute of Mechanical Engineering of the Ac.Sc. USSR) on June 28-31, 1958. About 400 people participated and the participants included specialists in the fields of foundry, metallurgy, crystallography, physics, welding, heat, physical chemistry, mathematical physics and other related subjects. In addition to Soviet participants, foreign visitors included Professor D. Czikl (East Germany) and N.I. Chvorinov (Czechoslovakia). This conference on crystallisation of metals was the fourth conference relating to the general problem of the theory of foundry processes.

Conference on Crystallisation of Metals SOV/24-58-4-37/39

Crystallisation of Cast Iron. I.A. Stepanov and N.V. Petrova, in their paper "Investigation of the Crystallisation of magnesium-inoculated iron", reported on experimental data relating to the conditions of solidification and the structure of castings made of magnesium-inoculated iron; they presented a theory of crystallisation of magnesium-inoculated iron.
B.B. Mil'man, in his paper "Investigation of the Process of Formation of Spheroidal Graphite in Iron", considered the influence of various factors and characteristics of the metal on the formation of graphite inclusions.
Professor D. Czikl (East Germany) presented a paper on crystallisation of graphite in cast iron, which was illustrated by extensive metallographical information.
Ya.N. Malinochka and A. Zhukov dealt with the problem of intracrystalline liquation of silicon and its influence on the structural diagram of cast iron.
I.I. Khoroshev and I.Ye. Lev dealt with the mechanism of germination of centres of crystallisation of graphite in castings made of white iron and the influence of the speed of crystallisation on the distribution of alloying elements between the individual phases of iron-carbon alloys. I.V. Salli proposed a method of hardening of alloys from the liquid state using an extremely high speed of cooling; investigations relating to this method enabled conservation of saturated solutions of carbon in iron which correspond to the liquid state.
B. Ya. Khrapkovskiy dealt with the investigation of crystallisation, the primary structure and the properties of quasi-eutectic grey iron.

APPROVED FOR RELEASE: 08/25/2000 CIA-RDP86-00513R001446910003-3"

"APPROVED FOR RELEASE: 08/25/2000 CIA-RDP86-00513R001446910003-3

SOV-128-58-7-9/20

AUTHOR: Salli, I.V., Candidate of Physical-Mathematical Sciences

TITLE: Structure Formation of Alloys at a High Cooling Rate of the Melt (Formirovaniye struktury splavov pri bol'shikh skorostyakh okhlazhdeniya rasplavov.)

PERIODICAL: Liteynoye proizvodstvo, 1958, Nr 7, pp 22-25 (USSR)

ABSTRACT: Very high cooling rates of molten metal will find extensive application in foundry techniques. Chill molds and strip rolling directly from liquid metal are examples of applications already achieved, but the crystallization laws in cooking by thousands of degrees per second have not been studied yet and consequently there are no methods of cooling considerable masses of metal at such a rate. The solution of the problem may reveal new useful properties of alloys and a great increase of work efficiency in foundries. This article presents results of a study on films of steel, cast iron, silumin and the nonferrous alloys Al-Zn, Pb-Sn and Bi-Sn of different compositions solidified by extreme overcooling (i.e. lowest temperature under the critical point on which it is possible to hold the metal at the start of crystallization). An experimental

Card 1/2

APPROVED FOR RELEASE: 08/25/2000 CIA-RDP86-00513R001446910003-3"

"APPROVED FOR RELEASE: 08/25/2000 CIA-RDP86-00513R001446910003-3

SOV-128-58-7-9/20

Structure Formation of Alloys at a High Cooling Rate of the Melt

device used in the study (fig.1) trapped a drop of molten metal between two copper plates spreading it into film of 0.02 mm thickness, with instantaneous cooling from 1700°C. Microphotographs of the films made without any grinding or polishing are shown (fig.2). The films were examined with an X-ray camera and metallographically. Observations are discussed with references to existing work in this field. There are 3 microphotographs, 1 X-ray photograph, 1 diagram, 1 graph and 8 references, 4 of which are Soviet and 4 English.

1. Alloys--Sturcture 2. Metals--Cooling 3. Alloys--Test results
4. Metal films--Properties 5. Radiography--Applications

Card 2/2

APPROVED FOR RELEASE: 08/25/2000 CIA-RDP86-00513R001446910003-3"

"APPROVED FOR RELEASE: 08/25/2000 CIA-RDP86-00513R001446910003-3

AUTHOR: Salli, I.V. SOV/126-8-5-13/29

TITLE: On the Determination of the Surface Tension at Phase Boundaries

PERIODICAL: Fizika metallov i metallovedeniye, Vol 8, 1959, Nr 5, pp 721-724 (USSR)

ABSTRACT: The author states that, in spite of its importance in the thermodynamics and kinetics of crystallization, most work (Refs 1-7) has been restricted to determinations for nucleus/liquid boundaries; only the order of magnitude of surface tension for solid phases in the Fe-C system has been determined (Ref 8). The author gives data calculated on phase-boundary surface tension with the aid of well-known equations used for calculating crystal-nucleus size in the crystallization of single-component systems or the decomposition of supersaturated solutions. Calculated values agree well (Table 1) with the available published experimental values (Refs 2-7). The author briefly discusses the applicability of the equations to different systems and tabulates (Table 2) his calculated surface tension values for cementite/ferrite, cementite/austenite and

Card 1/2

APPROVED FOR RELEASE: 08/25/2000 CIA-RDP86-00513R001446910003-3"

"APPROVED FOR RELEASE: 08/25/2000 CIA-RDP86-00513R001446910003-3

SOV/126-8-5-13/29

On the Determination of the Surface Tension at Phase Boundaries

graphite/austenite, together with the corresponding published values (Ref 8), some obtained as a result of checking a theoretical calculation of the coalescence process (Ref 9). The author considers that although the relationships proposed need further development, they represent experimental data satisfactorily, and that still better agreement could be obtained with the aid of a coefficient allowing for the difference between the matrix and the substance crystallizing from it.

Card 2/2

There are 1 figure, 2 tables and 9 references, of which 3 are Soviet and 6 English.

ASSOCIATION: Dnepropetrovskiy gosuniversitet (Dnepropetrovsk State University)

SUBMITTED: November 11, 1958

APPROVED FOR RELEASE: 08/25/2000 CIA-RDP86-00513R001446910003-3"

"APPROVED FOR RELEASE: 08/25/2000 CIA-RDP86-00513R001446910003-3

MIROSHNICHENKO, I.S.; SALLI, I.V.

Unit for the crystalization of alloys with a high rate of cooling.
Zav.lab. no.11:1398-1399 '59. (MIRA 13:4)

1. Dnepropetrovskiy gosudarstvennyy yniversitet.
(Metallic films)

APPROVED FOR RELEASE: 08/25/2000 CIA-RDP86-00513R001446910003-3"

"APPROVED FOR RELEASE: 08/25/2000 CIA-RDP86-00513R001446910003-3

SALLI, I. V.

PHASE I BOOK EXPLOITATION SOV/4344

Soveshchaniye po teorii liteynykh protsessov, 4th

Kristallizatsiya metallov; trudy soveshchaniya (Crystallization of Metals; Transactions of the Fourth Conference on the Theory of Casting Processes) Moscow, Izd-vo AN SSSR, 1960. 325 p. 3,200 copies printed.

Sponsoring Agency: Akademiya nauk SSSR. Institut mashinovedeniya. Komissiya po tekhnologii mashinostroyeniya.

Resp. Ed.: B. B. Gulyayev, Doctor of Technical Sciences, Professor; Ed. of Publishing House: V. S. Rzhesnikov; Tech. Ed.: S. G. Tikhomirova.

PURPOSE: This book is intended for metallurgists and scientific workers. It may also be useful to technical personnel at foundries.

COVERAGE: The book contains the transactions of the Fourth Conference (1958) on the Theory of Casting Processes. [The previous 3 conferences dealt with hydrodynamics of molten metals (1955), solidification of metals (1956), and shrinkage processes in castings (1957)]. General problems in the crystallization of metals, including the crystallization of constructional steels, alloy steels with special properties, cast iron, and of nonferrous alloys, are discussed. Recognition is given to D. K. Chernov and N. T. Gudtsov and their students, B. B. Gulyayev and A. G. Spasskiy, for their contributions to the understanding of the basic problems involved in the theory of crystallization of ferrous and nonferrous metals and alloys. Academician A. V. Shubnikov is also mentioned in connection with his work on the planning of research on crystal formation. References accompany several of the articles.

Magnitskiy, G. N., A. A. Dzadova, and B. B. Gulyayev. Influence of Alloy Composition on Conditions of the Primary Crystallization of Castings 49

Kamenetskaya, D. S., E. P. Rakhmanova, and Ye. Z. Shekter. Investigation of the Crystallization of Iron and Its Alloys 57

Girshovich, N. G. On the Interrelation Between Solidification and Crystallization Processes. 62

Salli, I. V. Crystallization of Binary Alloys Subjected to Deep Supercooling 69

Ovsiyenko, D. Ye. Influence of Insoluble Admixtures on the Crystallization and Structure of Metals 76

Beymark, V. Ye. Influence of the Modifying Agent on the Distortion of Crust and Rate of Crystallization of an Ingot 86

Tuferov, A. M. On the Mechanism of the Crystallization and Recrystallization Processes 94

II. CRYSTALLIZATION OF CONSTRUCTIONAL STEEL

Lapitskiy, V. I., V. N. Luzgin, A. I. Marinov, G. N. Oyks, V. V. Oleksenko, V. I. Orlov, K. P. Rudichev, and N. J. Stupar'. Some Ways of Lowering the Heterogeneity of Large Ingots of Rimmed Steel 100

Khvorinov, N. I. Structure Formation of Steel 108

Novitskiy, V. K., A. V. Mikul'chik, and V. V. Slinov. Investigation of Ingots With Internal Chills 112

Bevarova-Shebeleva, N. P. Dependence of the Dendritic Structure and Properties of Cast Steel on the Microstructure 121

Guglin, N. N., A. A. Novikova, and B. B. Gulyayev. Investigation of the Mechanical Properties of Steel at Temperatures Close to the Crystallization Point 126

Frynov, A. F. Crystallization of a Continuous Ingot and the Influence of Hot-Steel Properties on It 134

Ivantsov, G. P., and B. I. Polyak. Cooling Regime Securing Minimal Thermal Stresses in the Crust of a Flat Ingot in Continuous Casting 139

Ia'shakov, N. N. Influence of the Characteristic Features of Crystallization on the Mechanical Properties of Low-Alloy Cast Steel 150

APPROVED FOR RELEASE: 08/25/2000 CIA-RDP86-00513R001446910003-3"

"APPROVED FOR RELEASE: 08/25/2000 CIA-RDP86-00513R001446910003-3

SALLI, I.V.

Surface tension at the austenite-ferrite boundary. Izv.vys. ucheb.zav.; chern.met. no.5:106-107 '60. (MIRA 13:6)

1. Dnepropetrovskiy gosudarstvennyy universitet.
(Surface tension) (Steel--Metallography)

APPROVED FOR RELEASE: 08/25/2000 CIA-RDP86-00513R001446910003-3"

"APPROVED FOR RELEASE: 08/25/2000 CIA-RDP86-00513R001446910003-3

69700
S/126/60/009/03/025/033
E111/E452

18.7500

AUTHORS: L'nyanoy, V.N. and Salli, I.V.

TITLE: On the Diffusionless Transformation of Martensite into Austenite

PERIODICAL: Fizika metallov i metallovedeniye, 1960, Vol 9, Nr 3, pp 460-463 (USSR)

ABSTRACT: The authors discuss the recent article by B.K.Sokolov and V.D.Sadovskiy (Ref 1) on austenite formation by reverse martensite transformation during the heating of steel. Many investigators have tried to establish the occurrence of this process in steel (eg Ref 1, 6 and 7). The present authors show photomicrographs of the surface of type U-10 steel after vacuum quenching in mercury from 1050°C (Fig 1a). Fig 1b shows the relief obtained on heating the same specimen (polished) at 200°C per minute in a vacuum furnace: the martensite relief has reappeared by a diffusional transformation. The authors go on to give a direct proof that transformation of martensite into austenite is not diffusionless either at much higher heating rates: Fig 2a shows a vacuum-quenched U-10 steel surface;

Card 1/2

APPROVED FOR RELEASE: 08/25/2000 CIA-RDP86-00513R001446910003-3"

"APPROVED FOR RELEASE: 08/25/2000 CIA-RDP86-00513R001446910003-3

69700
S/126/60/009/03/025/033
E111/E452

On the Diffusionless Transformation of Martensite into Austenite

Fig 2b the same surface after vacuum heating at about 800°C/sec, the cooling rate being far from the critical rate for hardening; Fig 2B the same surface after holding at 1000°C for 1 hour and cooling at the same rate as before. Only in the last treatment is the martensite relief almost eliminated. The authors conclude that not only did diffusionless martensite to austenite transformation not occur in the Sokolov-Sadovskiy work but that it cannot occur at any heating rates because of the especially high mobility of carbon in steels. There are 2 figures and 7 Soviet references.

ASSOCIATION: Dnepropetrovskiy gosudarstvennyy unitersitet (Dnepropetrovsk State University)

SUBMITTED: January 21, 1959

Card 2/2

APPROVED FOR RELEASE: 08/25/2000 CIA-RDP86-00513R001446910003-3"

"APPROVED FOR RELEASE: 08/25/2000 CIA-RDP86-00513R001446910003-3

81414

S/020/60/132/06/39/068
B004/B005

18.7520

AUTHORS: Salli, I. V., Miroshnichenko, I. S.

TITLE: Some Peculiarities of the Crystallization of Eutectic Alloys at a High Cooling Rate

PERIODICAL: Doklady Akademii nauk SSSR, 1960, Vol. 132, No. 6, pp. 1364 - 1367

TEXT: The authors investigated the structure of alloys which were cooled rapidly by the method described in Ref. 9. The drop coming from the furnace solidifies between two copper plates to a film. Cooling rates of about 10^5 deg/sec may be attained. The films 0.05 - 0.2 mm thick were investigated metallographically; an X-ray structural analysis and a quantitative phase analysis were also carried out. Alloys with a maximum concentration C_M of one component were investigated (Fig. 1). On the rapid cooling of Al - Si, Pb - Sn, and Bi - Sn alloys which form no interphases, primary solid solutions are formed whose concentration is lower than C_M.

Card 1/3

APPROVED FOR RELEASE: 08/25/2000 CIA-RDP86-00513R001446910003-3"

"APPROVED FOR RELEASE: 08/25/2000 CIA-RDP86-00513R001446910003-3

81414

Some Peculiarities of the Crystallization of Eutectic Alloys at a High Cooling Rate

S/020/60/132/06/39/068
B004/B005

In the systems Al - Mn, Al - Cr, Ni - C, and Co - C forming interphases, the primary solid solutions have much higher concentrations than C_M. On crystallization, a second metastable phase ($MnAl_4$, Cr_2Al_{11}, Ni_3C, Co_3C) is formed. On simultaneous crystallization of the stable and metastable phases, two solid solutions are formed - one with C_M, the other one, over-saturated, with the concentration C'_M which differ roentgenographically from each other. Hence, the authors derive double phase diagrams (for the stable and metastable phases) which are shown in Fig. 2. In the metastable phase, the eutectic point shifts, and temperature decreases further. These results are explained by different $\Delta F/N$, and a change in the free energy of the system per atom of the separating substance in the stable and metastable phases (Fig. 3). There are 3 figures and 13 references: 10 Soviet, 1 British, and 1 German.

ASSOCIATION: Dnepropetrovskiy gosudarstvennyy universitet (Dnepropetrovsk State University)

PRESENTED: February 17, 1960, by G. V. Kurdyumov, Academician

Card 2/3

APPROVED FOR RELEASE: 08/25/2000 CIA-RDP86-00513R001446910003-3"

"APPROVED FOR RELEASE: 08/25/2000 CIA-RDP86-00513R001446910003-3

81414

Some Peculiarities of the Crystallization of Eutectic Alloys at a High Cooling Rate

S/020/60/132/06/39/068
B004/B005

SUBMITTED: February 11, 1960

Card 3/3

APPROVED FOR RELEASE: 08/25/2000 CIA-RDP86-00513R001446910003-3"

"APPROVED FOR RELEASE: 08/25/2000 CIA-RDP86-00513R001446910003-3

L'NYANOY, V.N.; SALLI, I.V.

Use of electron microscopy for the investigation of the graphitization surface of alloys. Izv. vys. ucheb. zav.; chern. met. no.2:100-104 '60. (MIRA 15:5)

1. Dnepropetrovskiy gosudarstvennyy universitet.
(Electron microscopy) (Alloys—Metallography)

APPROVED FOR RELEASE: 08/25/2000 CIA-RDP86-00513R001446910003-3"

"APPROVED FOR RELEASE: 08/25/2000 CIA-RDP86-00513R001446910003-3

86486
S/148/60/000/008/006/018
A161/A029

18.7520

AUTHORS: Miroshnichenko, I.S.; Salli, I.V.

TITLE: Metastable Equilibrium Lines in Diagrams of Binary Systems

PERIODICAL: Izvestiya vysshikh uchebnykh zavedeniy. - Chernaya metallurgiya, 1960, No. 8, pp. 104 - 109

TEXT: The alloys Pb-Sn, Bi-Sn, Al-Si, Al-Zn, Fe-C, Ni-C, Al-Mn, and Al-Cu were investigated in a wide range of concentrations including the eutectic, and data of other works were used for consideration of Al-Cu (Ref. 4) and Hg-Na (Ref. 5). Crystallization of eutectic alloys was studied at a high crystallization rate to determine if it is possible to obtain oversaturated solid solutions with a concentration exceeding the maximum at eutectic temperature. The principle described in Reference 3 was used - a drop of molten metal was ejected with high speed from the furnace and turned into a film either by splashing at impact on a copper sheet, or by quick catching between two copper plates. Films were obtained with a 0.03 - 0.2 mm thickness, and the calculated cooling speed was $\sim 10^5$ degree/sec. The alloys could be divided into two groups, with no oversaturation (Pb-Sn, Al-Si, Bi-Sn, Al-Zn), and with considerable oversaturation (Al-Mn, Al-Cu

Card 1/2

APPROVED FOR RELEASE: 08/25/2000 CIA-RDP86-00513R001446910003-3"

"APPROVED FOR RELEASE: 08/25/2000 CIA-RDP86-00513R001446910003-3

86486

S/148/60/000/008/006/018
A161/A029

Metastable Equilibrium Lines in Diagrams of Binary Systems

Al-Cu, Hg-Na, Ni-C). The first group does not form intermediate phases whilst the alloys of the second group do. The absence of oversaturation in the first group may be explained by the separation of the second phase that is too difficult to prevent. The following conclusions were drawn: 1) It is apparently not possible in practice to obtain oversaturation of a primary solid solution over the limit at eutectic temperature in eutectic alloys. 2) In alloys forming intermediate phases, considerable oversaturation may be obtained with sufficiently rapid cooling, but not above the maximum solubility of a solid solution in equilibrium with the given intermediate phase. 3) The experimental results confirm the continuation of solidus lines in stable equilibrium diagrams to the crossing with the eutectic horizontal of the metastable system. 4) Continuation of the solidus lines into the subcritical region was not confirmed in eutectic systems forming no metastable intermediate phases. There are 4 figures and 5 Soviet references.

ASSOCIATION: Dnepropetrovskiy gosudarstvennyy universitet (Dnepropetrovsk State University)

SUBMITTED: July 16, 1959

Card 2/2

APPROVED FOR RELEASE: 08/25/2000 CIA-RDP86-00513R001446910003-3"

"APPROVED FOR RELEASE: 08/25/2000 CIA-RDP86-00513R001446910003-3

MIROSHNICHENKO, I.S. (Dnepropetrovsk); SALLI, I.V. (Dnepropetrovsk)

Structure of liquid alloys during severe undercooling. Izv. AN. SSSR. Otd. tekh. nauk. Met. i topl. no.3:130-131 My-Je '61. (MIRA 14:7)

(Alloys--Metaliography) (Metals at low temperatures)

APPROVED FOR RELEASE: 08/25/2000 CIA-RDP86-00513R001446910003-3"

"APPROVED FOR RELEASE: 08/25/2000 CIA-RDP86-00513R001446910003-3

SALLI, I.V.

Processes occurring in the early stages of cast iron and steel graphitization. Izv. vys. ucheb. zav.; chern. met. 4 no.10: 88-93 '61. (MIRA 14:11)

1. Dnepropetrovskiy gosudarstvennyy universitet.
(Iron alloys--Metallography) (Phase rule and equilibrium)

APPROVED FOR RELEASE: 08/25/2000 CIA-RDP86-00513R001446910003-3"

"APPROVED FOR RELEASE: 08/25/2000 CIA-RDP86-00513R001446910003-3

AM4033669 BOOK EXPLOITATION S/

Salli, Il'ya Vasil'yevich

Physical bases in the formation of alloy structure (Fizicheskiye osnovy* formirovaniya struktury* splavov) Moscow, Metallurgizdat, 63. 0218 p. illus., biblio. Errata slip inserted. 3,400 copies printed.

TOPIC TAGS: crystal growth, molecular kinetic theory, alloy structure, thermodynamics, phase diagram, alloy structure, phase transformation, kinetics, coalescence, surface tension, graphitization

PURPOSE AND COVERAGE: The book considers the principles of thermodynamics and kinetics of phase transitions in alloys. An analysis of the nucleation and the growth of crystals from the point of view of modern molecular-kinetic theory of structure of matter is followed by the thermodynamic theory of the construction of the diagram of state and its application to metastable states. The formation of the structure of alloys at large cooling rates is investigated. A procedure is presented for determining the surface tension on the interphase boundary. The transition of metastable systems into a stable state is considered. The most important features of graphitization of alloys are described on the basis of general laws for the formation of the structure of metastable systems. The book is intended for

Card 1/2

APPROVED FOR RELEASE: 08/25/2000 CIA-RDP86-00513R001446910003-3"

"APPROVED FOR RELEASE: 08/25/2000 CIA-RDP86-00513R001446910003-3

AM4033669

many research workers and engineers engaged in metallography and metal physics.

TABLE OF CONTENTS [abridged]:

Foreword - - 5
Ch. 1. General ideas on the structure of an alloy - - 7
Ch. 2. Some concepts of thermodynamics - - 24
Ch. 3, Phase equilibrium and diagram of state - - 34
Ch. 4. Nonequilibrium state - - 45
Ch. 5. Mechanism and kinetics of phase transformation - - 59
Ch. 6. Formation of structure of alloys - - 98
Ch. 7. Kinetics of coalescence and determination of surface tension on the boundary of a solid phase - - 138
Ch. 8. Nonequilibrium structure of graphitizing alloys - - 162
Ch. 9. Transition of metastable system into a stable state - - 196
Literature - - 213

SUB CODE: MM, ML, TD SUBMITTED: 06Sep63 NR REF SOV: 198

OTHER: 106 DATE ACQ: 27Feb64

Card 2/2

APPROVED FOR RELEASE: 08/25/2000 CIA-RDP86-00513R001446910003-3"

"APPROVED FOR RELEASE: 08/25/2000 CIA-RDP86-00513R001446910003-3

KOVALEVA, Ye.A.; SALLI, I.V.

Brittleness of LKh21N5T chromium-nickel steel. Metalloved. i term. obr. met. no.10:44-46 O '63. (MIRA 16:10)

APPROVED FOR RELEASE: 08/25/2000 CIA-RDP86-00513R001446910003-3"

"APPROVED FOR RELEASE: 08/25/2000 CIA-RDP86-00513R001446910003-3

L 59639-65 EWT(m)/T/EWP(t)/EWP(b)/EWA(c) IJP(c) JD

ACCESSION NR: AP5002184 S/0032/65/031/001/0120/0121 15

AUTHOR: Salli, I. V.; Limina, L. P. 11 B

TITLE: Unit for crystallization of alloys at high cooling rates 18

SOURCE: Zavodskaya laboratoriya, v. 31, no. 1, 1965, 120-121

TOPIC TAGS: alloy crystallization, molten metal splashing, splat unit, rapid melt cooling

ABSTRACT: Two units for splat cooling of alloys have been developed. The first unit (see Fig. 1 of the Enclosure) has copper disks 1 and 2 mounted on the shaft of electric motor 3. Half of the first disk is bent back forming a gap which during rotation alternately opens and closes under the pressure of roller 4. Alloy droplets thrown into the gap from small furnaces 5 are spread into a thin film and at motor rpm of 2500 are cooled at a rate of $1 \cdot 10^5$ C/sec. In the second unit (see Fig. 2 of the Enclosure) the alloy droplet from furnace 1 is thrown into rotating copper cylinder 4 by lever 2 and spring 3. The droplets are transformed by centrifugal force into a

Card 1/3

APPROVED FOR RELEASE: 08/25/2000 CIA-RDP86-00513R001446910003-3"

"APPROVED FOR RELEASE: 08/25/2000 CIA-RDP86-00513R001446910003-3

L 59639-65

ACCESSION NR: AP5002184

thin film. The extremely high rate of metal cooling reached in the described units made it possible, for instance, to raise the content of manganese in the α-solid solution of Al-Mn alloy up to 14%, compared to a maximum equilibrium content of 1.82% at the eutectic temperature. In the Pb-Cu alloy, in which mutual solubility of components is zero at room temperature, the solid solution of Pb in Cu (with about 4% Pb) could be obtained. Orig. art. has: 2 figures. [ND]

ASSOCIATION: none

SUBMITTED: 00 ENCL: 01 SUB CODE: MM

NO REF SOV: 001 OTHER: 002 ATD PRESS: 3172

Card 2/3

APPROVED FOR RELEASE: 08/25/2000 CIA-RDP86-00513R001446910003-3"

"APPROVED FOR RELEASE: 08/25/2000 CIA-RDP86-00513R001446910003-3

L 59639-65
ACCESSION NR: AP5002184 ENCLOSURE: 01

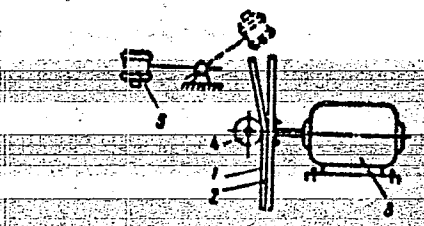

Fig. 1 Unit for alloy rapid cooling equipped with a roller

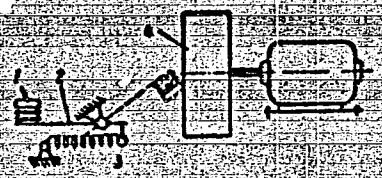

Unit for alloy rapid cooling by centrifuging

Card 3/3

APPROVED FOR RELEASE: 08/25/2000 CIA-RDP86-00513R001446910003-3"

"APPROVED FOR RELEASE: 08/25/2000 CIA-RDP86-00513R001446910003-3

SALLI, I.V.; LIMINA, L.P.

Extension of the solidus line into the subcritical region.
Iav. vys. ucheb. zav.; tsvet. met. 8 no.4:117-122 '65.
(MIRA 18:9)

1. Kafedra metallofiziki Dnepropetrovskogo gosudarstvennogo universiteta.

APPROVED FOR RELEASE: 08/25/2000 CIA-RDP86-00513R001446910003-3"

"APPROVED FOR RELEASE: 08/25/2000 CIA-RDP86-00513R001446910003-3

SALLO, Ervin (Timisoara)

Galvanic elements. Gaz mat B 14 no.5:264-268 My '63.

APPROVED FOR RELEASE: 08/25/2000 CIA-RDP86-00513R001446910003-3"

"APPROVED FOR RELEASE: 08/25/2000 CIA-RDP86-00513R001446910003-3

SALLO, Ervin (Timisoara)

Some relations which result from avogadro's law. Gaz mat B 14 no.11:662-663 N'63

APPROVED FOR RELEASE: 08/25/2000 CIA-RDP86-00513R001446910003-3"

"APPROVED FOR RELEASE: 08/25/2000 CIA-RDP86-00513R001446910003-3

SALLO, F.A., inzh.

Reserves in the economy of electric power in the Estonian S.S.R. Prom. energ. 20 no.11:15-16 N '65. (MIRA 18:11)

APPROVED FOR RELEASE: 08/25/2000 CIA-RDP86-00513R001446910003-3"

"APPROVED FOR RELEASE: 08/25/2000 CIA-RDP86-00513R001446910003-3

COUNTRY : Poland H-34
CATEGORY :

ABS. JOUR. : RZKhim., No. 1959, No. 88779

AUTHOR : Salm, A.
INST. :
TITLE : Improved Flameproofing Treatments of Fabrics

ORIG. PUB. : Techn. wlokienn., 1959, 8, No 1, 28-30

ABSTRACT : A review. (Principal methods of flameproofing cellulose-fiber fabrics; formation of cellulose esters; surface coatings of oxides or synthetic resins; prerequisite characteristics of applied coatings). -- D. Yakesh

CARD:

APPROVED FOR RELEASE: 08/25/2000 CIA-RDP86-00513R001446910003-3"

"APPROVED FOR RELEASE: 08/25/2000 CIA-RDP86-00513R001446910003-3

SALMAKOV, K.M., mladshiy nauchnyy sotrudnik

Epizootiology of brucellosis. Uch. zap. KVI 19:107-115 '62. (MIRA 18:8)

1. Laboratoriya bakteriynykh infekciy (zav. - doktor veterin. nauk Kh.Kh.Abdullin) Kazanskogo veterinarnogo instituta.

APPROVED FOR RELEASE: 08/25/2000 CIA-RDP86-00513R001446910003-3"

"APPROVED FOR RELEASE: 08/25/2000 CIA-RDP86-00513R001446910003-3

SAL'MAN, A. YA. PA 70T99

USSR/Medicine - Echinococcus Mar/Apr 1948
Medicine - Brain

"Echinococcus of the Cerebrum, Unilocular and Multilocular, I," A. Ya. Sal'man, Leningrad Sci Res Neurosurg Inst, Ministry of Pub Health RSFSR, 6½ pp

"Voprosy Neyrokhirur" No 2

Briefly describes some data on the intracranial distribution of single-cyst echinococcus, that form of the parasite which holds the greatest interest from the surgical standpoint; then briefly discusses multicyst echinococcus.

70T99

APPROVED FOR RELEASE: 08/25/2000 CIA-RDP86-00513R001446910003-3"

"APPROVED FOR RELEASE: 08/25/2000 CIA-RDP86-00513R001446910003-3

SAL'MAN, A. YA. PA 64/49T96

USSR/Medicine - Echinococcus Multilocularis Jan/Feb 49
Medicine - Neurosurgery

"Echinococcus Unilocularis and Multilocularis of the Brain, Report No II," A. Ya. Sal'man, Leningrad, 7 pp

"Vop Neyrokhirurg" No 1

Reviews the process in treatment of this type tumor, including a chart of operations performed in 1940 and 1943, a chart of the symptoms, and a chart showing the relative probabilities of other organs that may be affected simultaneously with encephalopathy. Includes pictures. Submitted 6 Jul 47.

64/49T96

APPROVED FOR RELEASE: 08/25/2000 CIA-RDP86-00513R001446910003-3"

"APPROVED FOR RELEASE: 08/25/2000 CIA-RDP86-00513R001446910003-3

SALMAN, A. YA.

~~SALMAN, A.~~ and BABCHIN, I. S.

~~Ya~~. Nurosurg, Inst., Lenningrad Leucotomy in the treatment of intractable pain Vop. Neirokhir, 1950, 14/4 (22-26) The excellent results in 5 patients are desctribed. It must be employed only when the area of the pain is widespread and when the site of the primary disease causing the pain corresponds to the superior regions of the trunk, neck and head. This operation should be performed only in cases in which the patients are lost and those in which besides the painful manifestations, the patirnt also presents as a consequence marked mental alterations. Teneff-Torino

SO: Neurology & Psychiatry July-Dec. 1951 4.2

APPROVED FOR RELEASE: 08/25/2000 CIA-RDP86-00513R001446910003-3"

"APPROVED FOR RELEASE: 08/25/2000 CIA-RDP86-00513R001446910003-3

SALMAN, A.I.

BABCHIN, I.S;SALMAN, A.I.

Frontal leucotomy in surgical treatment of pain. Vopr. neirokhir. 14 no.4:22-26 July-Aug. 1950. (CIML 20:1)

1. Of the Clinical Neurosurgical Department and Staff (Head -- Prof. I. S. Babchin), Leningrad Neurosurgical Institute imeni Prof. A. L. Polenov (Director -- Honored Worker in Science Prof. V. N. Shamov, Active Member of the Academy of Medical Sciences USSR) and of the State Institute for the Advanced Training of Physicians imeni S. M. Kirov (Director -- Prof. G. A. Znamenskiy).

APPROVED FOR RELEASE: 08/25/2000 CIA-RDP86-00513R001446910003-3"

"APPROVED FOR RELEASE: 08/25/2000 CIA-RDP86-00513R001446910003-3

RAZDOL'SKIY, I.Ya.; TERPUGOV, Ye.A.; SAL'MAN, A.Ye.

Classification and clinical aspects of arachnoendotheliomas of the posterior cranial fossa. Zhur. nevr. i psikh. 54 no.6:567-571 Je '54. (MLRA 7:7)

1. Nauchno-issledovatel'skiy psikhonevrologicheskiy institut imeni V.M.Bekhtereva.
(BRAIN, neoplasms,
*classif. & clin. aspects of tumors of posterior cranial fossa)

APPROVED FOR RELEASE: 08/25/2000 CIA-RDP86-00513R001446910003-3"

"APPROVED FOR RELEASE: 08/25/2000 CIA-RDP86-00513R001446910003-3

~~SAL'MAN, A. Ya.~~

RAZDOL'SKIY, I.Ya.; SAL'MAN, A.Ya.; TERPUGOV, Ye.A.

Psychic disorders in cysticercosis of the brain [with summary in French] Zhur.nevr.i psikh. 57 no.4:496-503 '57. (MLRA 10:7)

1. Gosudarstvennyy nauchno-issledovatel'skiy psikhonevrologicheskiy institut imeni V.M.Bekhtereva, Leningrad.
(CYSTICERCOSIS, complications,
brain, with ment. disord. (Rus))
(MENTAL DISORDERS, etiology and pathogenesis,
cysticercosis of brain (Rus))
(BRAIN, diseases,
cysticercosis with ment. disord. (Rus))

APPROVED FOR RELEASE: 08/25/2000 CIA-RDP86-00513R001446910003-3"

"APPROVED FOR RELEASE: 08/25/2000 CIA-RDP86-00513R001446910003-3

RAZDOL'SKIY, I.Ya.; SAL'MAN, A.Ya.; TERPUGOV, Ye.A.

Cysticercosis of the spinal cord. Zhur. nevr. i psikh 58 no.12:1424-1430 '58. (MIRA 12:1)

1. Nauchno-issledovatel'skiy psikhonevrologicheskiy institut imeni V. M. Bekhtereva (dir. - prof. V.N. Myasishchev), Leningrad.
(SPINAL CORD, dis.
cysticercosis (Rus))
(CYSTICERCOSIS, case reports,
spinal cord (Rus))

APPROVED FOR RELEASE: 08/25/2000 CIA-RDP86-00513R001446910003-3"

"APPROVED FOR RELEASE: 08/25/2000 CIA-RDP86-00513R001446910003-3

RAZDOL'SKIY, I.Ya., prof.; SAL'MAN, A.Ya.; TERPUGOV, Ye.A.

Parasaggital arachnoid endotheliomas (meningiomas). Vest. AMN SSSR 14 no.9:16-27 '59. (MIRA 13:1)

1. Nauchno-issledovatel'skiy psikhonevrologicheskiy institut imeni V.M. Bekhtereva. 2. Chlen-korrespondent AMN SSSR (for Razdol'skiy).
(MENINGIOMAS)

APPROVED FOR RELEASE: 08/25/2000 CIA-RDP86-00513R001446910003-3"

"APPROVED FOR RELEASE: 08/25/2000 CIA-RDP86-00513R001446910003-3

SAL'MAN, B.M., assistent.

The problem of weakening in the rims of pairs of wheels. Trudy RIIZHT no.17:146-151 '53. (MLRA 9:6)
(Car wheels)

APPROVED FOR RELEASE: 08/25/2000 CIA-RDP86-00513R001446910003-3"

"APPROVED FOR RELEASE: 08/25/2000 CIA-RDP86-00513R001446910003-3

KISLIK, V.A., doktor tekhn. nauk; SAL'MAN, B.M., inzh.

Measuring the stresses in the rims of moving wheel pairs. Zhel. dor. transp. 41 no.5:72-73 My '59. (MIRA 12:7)

(Car wheels)

APPROVED FOR RELEASE: 08/25/2000 CIA-RDP86-00513R001446910003-3"

"APPROVED FOR RELEASE: 08/25/2000 CIA-RDP86-00513R001446910003-3

SAL'MAN, B.M., starshiy prepodavatel'

"Collector for dynamic measurements of the stresses and temperatures of wheel pairs in motion." [Sbor.trud.] RIIZHT no.32:231-238 '61. (MIRA 16:12)

APPROVED FOR RELEASE: 08/25/2000 CIA-RDP86-00513R001446910003-3"

"APPROVED FOR RELEASE: 08/25/2000 CIA-RDP86-00513R001446910003-3

SAL'MAN, B.M., inzh.

"Experimental study of vibrations in the wobbling of the running gear of the rolling stock of railroads." [Sbor.trud.] RIIZHT no.32:239-246 '61. (MIRA 16:12)

1. Rostovskiy-na-Donu institut inzhenerov zheleznodorozhnogo transporta.

APPROVED FOR RELEASE: 08/25/2000 CIA-RDP86-00513R001446910003-3"

"APPROVED FOR RELEASE: 08/25/2000 CIA-RDP86-00513R001446910003-3

SAL'MAN, B.M., kand. tekhn. nauk

Strength of the wheel bands of railroad rolling stock. Trudy RIIZHT no.44:216-227 '64. (MIRA 19:1)

APPROVED FOR RELEASE: 08/25/2000 CIA-RDP86-00513R001446910003-3"

"APPROVED FOR RELEASE: 08/25/2000 CIA-RDP86-00513R001446910003-3

KRASOVITSKIY, V.S., kand.tekhn.nauk; BOL'SHAKOV, L.A., kand.tekhn.nauk; TURCHENKOVA, Ye.K., inzh.; GORBANEV, Ya.S., inzh.; YEGNUS, R.M., inzh.; CHUMAK, M.A., inzh.; KISSEL', N.N., inzh.; SAL'MAN, B.Sh., inzh.

Increasing the stability of ingot molds by an addition of ferrotitanium. Stal' 23 no.8:717-718 Ag '63. (MIRA 16:9)

1. Zhdanovskiy metallurgicheskiy institut, zavod "Azovstal'" i zavod im. Il'icha.

(Ingot molds)

APPROVED FOR RELEASE: 08/25/2000 CIA-RDP86-00513R001446910003-3"

"APPROVED FOR RELEASE: 08/25/2000 CIA-RDP86-00513R001446910003-3

SAL'MAN, F.

S/107/60/000/07/001/004
E192/E482

AUTHORS: Burenkov, N., Voronov, V. and Sal'man, F.

TITLE: A Stabilized Voltage Converter Based on Transistors

PERIODICAL: Radio, 1960, No.7, pp.23-24

TEXT: The stabilizer has the following characteristics: input voltage 25 V, input power 200 W and output voltage 350 V at the maximum load 350 mA; also there is an output of 150 V at 15 mA maximum and 21.5 V at the maximum current of 3.5 A. A detailed diagram of the stabilizer is given in Fig.4. The device consists of a stabilizer for the input voltage, a relaxation oscillator for stepping up the supply voltage and two rectifiers for 350 V and 150 V. A stabilizer is based on a triple emitter follower connected to the supply source. The reference voltage is provided by two series-connected silicon diodes. The diagram of the stabilizer is shown in Fig.1. The relaxation oscillator (see Fig.4) operates in a push-pull circuit. In order to provide the necessary output, each branch of the oscillator contains 2 transistors connected in parallel. The AC voltage to be rectified has a frequency of 320 c/s and is taken from the

Card 1/2

APPROVED FOR RELEASE: 08/25/2000 CIA-RDP86-00513R001446910003-3"

"APPROVED FOR RELEASE: 08/25/2000 CIA-RDP86-00513R001446910003-3

S/107/60/000/07/001/004
E192/E482

A Stabilized Voltage Converter Based on Transistors

windings II and IV of the oscillator transformer. The 350 V rectifier is based on a bridge circuit employing germanium diodes. The rectifier for 150 V is based on a half-wave circuit and its output voltage is additionally stabilized by a gas-filled stabilizer tube. The device has conversion efficiency of 85% and its stability is 1% for the supply voltage changes of up to 20%. The constructional details of the device are illustrated in Fig.5. There are 5 figures.

Card 2/2

APPROVED FOR RELEASE: 08/25/2000 CIA-RDP86-00513R001446910003-3"

"APPROVED FOR RELEASE: 08/25/2000 CIA-RDP86-00513R001446910003-3

86760

S/120/60/000/006/036/045
E073/E335

540 (1020, 1048, 1159)

AUTHORS: Burenkov, N.I., Voronov, V.A. and Sal'man, F.Ya.

TITLE: Stabilised Voltage Transformer Based on the Use of Semiconductor Triodes

PERIODICAL: Pribory i tekhnika eksperimenta, 1960, No. 6, pp. 124 - 126

TEXT: A compact stabilised semiconductor triode voltage transformer is described. It consists of a voltage stabiliser, a relaxation generator and two rectifiers (Fig. 1). The stabiliser is based on a series-connected loop with control from the output side. The input voltage is 25 V; output voltage: 21.5; 350; 150 V; the total power is 200 W; efficiency 85%. The stability is within ± 1% for a change of the input voltage between -10 and +20% of the rated voltage. At an ambient air temperature of 20 °C the heating of the triodes does not exceed 45 °C. There are 5 figures.

Card 1/3

APPROVED FOR RELEASE: 08/25/2000 CIA-RDP86-00513R001446910003-3"

"APPROVED FOR RELEASE: 08/25/2000 CIA-RDP86-00513R001446910003-3

86760

S/120/60/000/006/036/045
E073/E335

Stabilised Voltage Transformer Based on the Use of Semiconductor Triodes

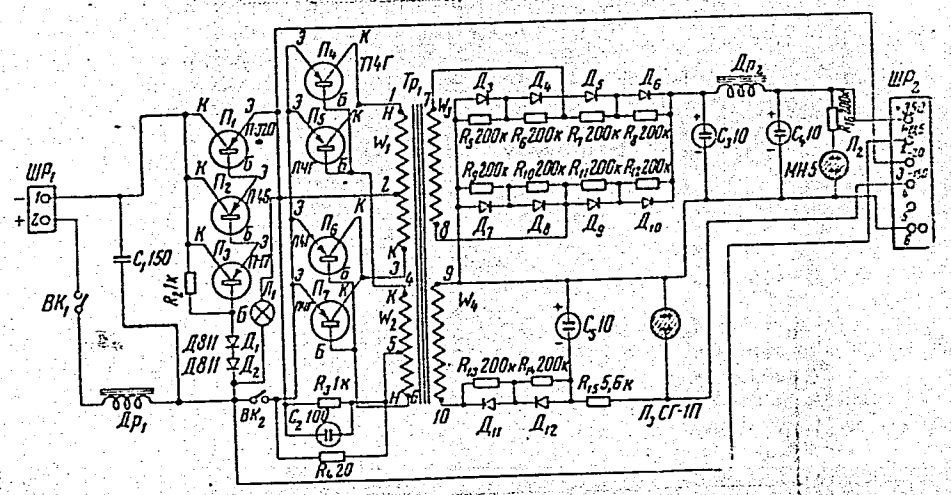

Card 2/3

APPROVED FOR RELEASE: 08/25/2000 CIA-RDP86-00513R001446910003-3"

"APPROVED FOR RELEASE: 08/25/2000 CIA-RDP86-00513R001446910003-3

86760
S/120/60/000/006/036/045
E073/E335

Stabilised Voltage Transformer Based on the Use of Semiconductor Triodes

ASSOCIATION: Leningradskiy Kirovskiy zavod (Leningrad Kirov Works)

SUBMITTED: November 20, 1959

Card 3/3

APPROVED FOR RELEASE: 08/25/2000 CIA-RDP86-00513R001446910003-3"

"APPROVED FOR RELEASE: 08/25/2000 CIA-RDP86-00513R001446910003-3

BURENKOV, N.I.; VORONOV, V.A.; SAL'MAN, F.Ya.

Stabilized transistorized converter. Prib. i tekh. eksp. no.6: 124-126 N-D '60. (MIRA 13:12)

1. Leningradskiy Kirovskiy zavod.
(Converters)

APPROVED FOR RELEASE: 08/25/2000 CIA-RDP86-00513R001446910003-3"

"APPROVED FOR RELEASE: 08/25/2000 CIA-RDP86-00513R001446910003-3

LYCHAGIN, G.A.; SAL'MAN, G.B.; CHUPRINA, N.Ye.

New data on the age and deposition conditions of "quartzites" in East Crimea. Dokl.AN SSSR 107 no.2:302-305 Mr '56. (MIRA 9:7)

1.Predstavleno akademikom N.M.Strakhovym.
(Crimea--Quartzite)

APPROVED FOR RELEASE: 08/25/2000 CIA-RDP86-00513R001446910003-3"

"APPROVED FOR RELEASE: 08/25/2000 CIA-RDP86-00513R001446910003-3

SHALYA, A.A.; SAL'MAN, G.B.

Neocomian sediments in the southwestern Crimea and Crimean Mountains in the light of new data. Trudy VNIIGAZ no.7: 36-47 '59. (MIRA 13:5)
(Crimea--Sediments (Geology))

APPROVED FOR RELEASE: 08/25/2000 CIA-RDP86-00513R001446910003-3"

"APPROVED FOR RELEASE: 08/25/2000 CIA-RDP86-00513R001446910003-3

DOBROVOL'SKAYA, T.I.; SAL'MAN, G.B.

Hauterivian-Barremian conglomerates of the eastern Crimea.
Dokl.AN SSSR 133 no.6:1405-1408 Ag '60.
(MIRA 13:8)

1. Kontora bureniya "Kryumneftegazrazvedka" goroda Feodosii. Predstavleno akad. N.S.Shatskim.
(Crimea--Conglomerate)

APPROVED FOR RELEASE: 08/25/2000 CIA-RDP86-00513R001446910003-3"

"APPROVED FOR RELEASE: 08/25/2000 CIA-RDP86-00513R001446910003-3

SEYFUL-MULYUKOV, R.B.; LEVIN, L.E.; SAL'MAN, G.B.; SHORNIKOV, B.Ya.

Correlation of the basic structural elements of the central parts of the northern Caspian oil- and gas-bearing basin. [Trudy] NIINeftegaza no.10:61-78 '63. (MIRA 18:3)

1. Nauchno-issledovatel'skaya laboratoriya geologicheskikh kriteriyev otsenki perspektiv neftegazonosnosti i Upravleniye neftyanoy i gazovoy promyshlennosti Privolzhskogo soveta narodnogo khozyaystva.

APPROVED FOR RELEASE: 08/25/2000 CIA-RDP86-00513R001446910003-3"

"APPROVED FOR RELEASE: 08/25/2000 CIA-RDP86-00513R001446910003-3

SAL'MAN, G.B.; VINOGRADOV, L.D.

Tectonics of the eastern part of Obshchiy Syrt. [Trudy] NIInefteggaza no.10:98-106 '63. (MIRA 18:3)

1. Nauchno-issledovatel'skaya laboratoriya geologicheskikh kriteriyev otsenki perspektiv neftegazonosnosti.

APPROVED FOR RELEASE: 08/25/2000 CIA-RDP86-00513R001446910003-3"

"APPROVED FOR RELEASE: 08/25/2000 CIA-RDP86-00513R001446910003-3

BROD, I.O.; LEVIN, L.E.; ROZANOV, L.N.; SAL'MAN, G.B.; SEYFUL'-MILYUKOV, R.B.

Basic structural elements of the basement of the northern Caspian oil- and gas-bearing basin. [Trudy] NIInefteqaza no.10: 17-49 '63. (MIRA 18:3)

1. Nauchno-issledovatel'skaya laboratoriya geologicheskikh kriteriyev otsenki perspektiv neftegazonosnosti i Volgogradskiy nauchno-issledovatel'skiy institut neftyanoy i gazovoy promyshlennosti.

APPROVED FOR RELEASE: 08/25/2000 CIA-RDP86-00513R001446910003-3"

"APPROVED FOR RELEASE: 08/25/2000 CIA-RDP86-00513R001446910003-3

SAL'MAN, G.B.

Features of the structures of the crystalline basement of the Ural Mountain region of Orenburg Province. Trudy MGRI 39:3-10 '63. (MIRA 16:10)

APPROVED FOR RELEASE: 08/25/2000 CIA-RDP86-00513R001446910003-3"

"APPROVED FOR RELEASE: 08/25/2000 CIA-RDP86-00513R001446910003-3

SAL'MAN, G.B.; SEYFUL'-MULYUKOV, R.B.

Basic structural elements of the northeastern sector of the Caspian syneclise in connection with the evaluation of the prospects for finding gas and oil. Neftegaz. geol. i geofiz. no.7:21-26 '64. (MIRA 17:8)

1. Nauchno-issledovatel'skaya laboratoriya geologicheskikh kriteriyev otsenki perspektiv neftegazonosnosti Gosudarstvennogo geologicheskogo komiteta SSSR.

APPROVED FOR RELEASE: 08/25/2000 CIA-RDP86-00513R001446910003-3"

"APPROVED FOR RELEASE: 08/25/2000 CIA-RDP86-00513R001446910003-3

KLUBOV, V.A.; LEVIN, L.E.; SAL'MAN, G.B.; EZDRIN, M.B.

Tectonic prerequisites of the search for oil and gas deposits within the northern borderland of the Caspian syneclise. Geol. nefti i gaza 9 no.1:19-24 Ja '65. (MIRA 18:3)

1. Vsesoyuznyy nauchno-issledovatel'skiy geologorazvedochnyy neftyanoy institut, Moskva; Nauchno-issledovatel'skaya laboratoriya geologicheskikh kriteriyev otsenki perspektiv neftegazonosnosti i Nizhnevolzhskiy nauchno-issledovatel'skiy institut geologii i geofiziki.

APPROVED FOR RELEASE: 08/25/2000 CIA-RDP86-00513R001446910003-3"

"APPROVED FOR RELEASE: 08/25/2000 CIA-RDP86-00513R001446910003-3

ROZANOV, Leonid Nikolayevich; SEYFUL'-MULYUKOV, Rustem Badriyevich; LEVIN, Leonid Eliazarovich; SAL'MAN, Gel'vetsiy.

[Tectonics, and oil and gas occurrences in the eastern part of the Russian Platform] Tektonika i neftegazonosnost' vostoka Russkoi platformy. Moskva, Nedra, 1965. 258 p. (MIRA 18:7)

APPROVED FOR RELEASE: 08/25/2000 CIA-RDP86-00513R001446910003-3"

"APPROVED FOR RELEASE: 08/25/2000 CIA-RDP86-00513R001446910003-3

ARONZON, A.B.; SAL'MAN, I.N.

Combined automatic line for machining bushings of cutting devices. Biul.tekh.-ekon.inform. no.8:15-17 '60. (MIRA 13:9)
(Machine tools) (Automatic control)

APPROVED FOR RELEASE: 08/25/2000 CIA-RDP86-00513R001446910003-3"

"APPROVED FOR RELEASE: 08/25/2000 CIA-RDP86-00513R001446910003-3

SAL'MAN, M.

Manufacturing plastic pulleys for machine tools at the "Krasnyi Proletarii" Plant. Mashinostroitel' no.11:20 N '61. (MIRA 14:11)
(Moscow--Machine-tool industry) (Plastics--Molding)

APPROVED FOR RELEASE: 08/25/2000 CIA-RDP86-00513R001446910003-3"

"APPROVED FOR RELEASE: 08/25/2000 CIA-RDP86-00513R001446910003-3

SAL'MAN, M. I.

"The Role of Disturbance of Nephritic Blood Circulation in the Pathogenesis of Arterial Hypertonia," Klin. Med, 26, No. 3, 1948; Hosp. Therapeutic Clinic im. Ostroumov, First Moscow Ord. of Lenin Med. Inst., -c1948-.

APPROVED FOR RELEASE: 08/25/2000 CIA-RDP86-00513R001446910003-3"