"APPROVED FOR RELEASE: 08/23/2000 CIA-RDP86-00513R001548610003-3

S/169/62/000/011/055/077
D228/D307

AUTHOR: Shapovalov, G.F.

TITLE: First Soviet expedition into north-western areas of the Atlantic Ocean

PERIODICAL: Referativnyy zhurnal, Geofizika, no. 11, 1962, 2, abstract 11V11 (Nauchno-tekhn. byul. Polyarn. n.-i. i proyektn. in-ta morsk. rybn. kh-va i okeanov., no. 4 (18), 1961, 9-10)

TEXT: The vessels SRT-1042 "Anchous" and SRT-4225 "Professor Somov" conducted work near the Great Newfoundland Banks and on shoals to the south-west from April 25 to May 25, 1959, in order to seek new fishing grounds for herring and other pelagic fish. During the voyage 40 hydrologic stations were made on 324 horizons, in particular 28 stations when the ships were drifting with nets and 34 biostations. 212 horizon-samples were taken for the chemical analysis of 30 stations, 16 plankton and 11 ichthyoplankton samples were collected, and 15 trawls and 18 drifts with nets were made.

Card 1/2

APPROVED FOR RELEASE: 08/23/2000 CIA-RDP86-00513R001548610003-3"

"APPROVED FOR RELEASE: 08/23/2000 CIA-RDP86-00513R001548610003-3

First Soviet expedition ...

S/169/62/000/011/055/077
D228/D307

The searches covered 8500 miles.
[Abstracter's note: Complete translation]

Card 2/2

APPROVED FOR RELEASE: 08/23/2000 CIA-RDP86-00513R001548610003-3"

"APPROVED FOR RELEASE: 08/23/2000 CIA-RDP86-00513R001548610003-3

ZUBOV, M.F.; FEDOSEYENKO, L.G.; SANIN, M.A.; PIVOVAROVA, T.M.; ZIL'BERMINTS, I.V., kand. biolog. nauk; FADEYEV, Yu.N., kand. sel'skokhoz. nauk; ZHURAVLEVA, L.M.; KIPIANI, A.A., aspirant; MEL'NIKOV, N.N.; BOCHAROVA, L.P.; SHVETSOVA-SHILOVSKAYA, K.D.; SHAPOVALOV, G.K.; SPIRINA, T.A.; SEDYKH, A.S.; ZINCHENKO, V.A., aspirantka

From experiments in the use of new preparations. Zashch. rast. ot vred. i bol. 8 no.10:24-26 O '63. (MIRA 17:6)

1. Vsesoyuznyy nauchno-issledovatel'skiy institut khimicheskikh sredstv zashchity rasteniy (for Zubov, Fedoseyenko, Sanin, Pivovarova). 2. Gruzinskiy institut zashchity rasteniy (for Kipiani). 3. Moskovskaya ordena Lenina sel'skokhozyaystvennaya akademiya im Timiryazeva (for Zinchenko).

APPROVED FOR RELEASE: 08/23/2000 CIA-RDP86-00513R001548610003-3"

"APPROVED FOR RELEASE: 08/23/2000 CIA-RDP86-00513R001548610003-3

POL'KIN, S.I.; BYKOV, Yu.A.; SHAPOVALOV, G.M.

Flotation of pyrochlore and zircon. Izv. vys. ucheb. zav.; tsvet. met. no.1:48-59 '58. (MIRA 11:6)

1. Moskovskiy institut tsvetnykh metallov i zolota. Kafedra obogashcheniya poleznykh iskopayemykh.
(Flotation) (Pyrochlore) (Zircon)

APPROVED FOR RELEASE: 08/23/2000 CIA-RDP86-00513R001548610003-3"

"APPROVED FOR RELEASE: 08/23/2000 CIA-RDP86-00513R001548610003-3

SOV/137-59-1-2082

Translation from: Referativnyy zhurnal. Metallurgiya, 1959, Nr 1, p 273 (USSR)

AUTHORS: Petrova, Z. D., Shapovalov, G. M., Yudina, I. N.

TITLE: The Seventh Conference on Laboratory Methods for the Investigation of Ores and Minerals of Rare and Trace Elements (VII soveshchaniye po laboratornym metodam issledovaniya rud i mineralov redkikh i rasseyannykh elementov. Leningrad, 11-20 iyunya 1957 g.)

PERIODICAL: Izv. vyssh. uchebn. zavedeniy. Tsvetn. metallurgiya, 1958, Nr 1, pp 184-185

ABSTRACT: From June 11 to 20, 1957, a conference was held in Leningrad on the laboratory investigation of ores and minerals of rare and trace elements, called by the All-Union Scientific Research Geological Institute; during the conference 160 reports from 45 organizations were heard. In the analytical section reports on the newest chemical and physico-chemical methods for analysis of rare-metal materials were discussed together with the review-type reports. Over 30 lectures were heard in the technological section. VIMS (All-Union Scientific Research Institute of Mineral Raw Materials), Mekhanobr (Scientific Research Institute for Mechanical Concentration of Minerals), and the

Card 1/2

APPROVED FOR RELEASE: 08/23/2000 CIA-RDP86-00513R00154861000

"APPROVED FOR RELEASE: 08/23/2000 CIA-RDP86-00513R001548610003-3

SHAPOVALOV, G.M.; POL'KIN, S.I.

Effect of soluble glass and sodium oleate on the flotation of pyrochlore and zircon with use of sodium alkyl sulfate. Izv. vys.ucheb.zav.; tsvet.met. 2 no.1:20-25 '59. (MIRA 12:5)

1. Moskovskiy institut tsvetnykh metallov i zolota. Kafedra obogashcheniya poleznykh iskopayemykh.
(Flotation) (Pyrochlore) (Zircon)

APPROVED FOR RELEASE: 08/23/2000 CIA-RDP86-00513R001548610003-3"

"APPROVED FOR RELEASE: 08/23/2000 CIA-RDP86-00513R001548610003-3

18.2000

AUTHORS: Pol'kin, S. I., Shapovalov, G. F.

TITLE: Concerning the Influence of Salts of Polyvalent Metals on Flotation of Nonsulfide Minerals with Sodium Alkylsulfate

PERIODICAL: Izvestiya vysshikh uchebnykh zavedeniy. Tsvetnaya metallurgiya, 1960, Nr 1, pp 29-34 (USSR)

ABSTRACT: The influence of polyvalent metal cations on flotation of minerals with sodium alkylsulfate has not been adequately studied, although this flotation agent is considerably more selective than oleic acid and sodium oleate. Alkylsulfate salts are similar to fatty acid soaps: their anionic polar groups are attached to hydropholic radicals and make them surface-active. Alkyl sulfates are stronger acids than the corresponding fatty acids: their alkali salts are less easily hydrolyzed in water solutions than soaps, and their selective collecting properties are retained in both

Card 1/3

APPROVED FOR RELEASE: 08/23/2000 CIA-RDP86-00513R001548610003-3"

"APPROVED FOR RELEASE: 08/23/2000 CIA-RDP86-00513R001548610003-3

Concerning the Influence of Salts of Polyvalent Metals on Flotation of Nonsulfide Minerals With Sodium Alkylsulfate

SOV/[illegible]-1/27

acid and alkaline solutions. In distilled water solutions (up to 1500 mg/liter) sodium alkylsulfate has no flotation effect on pyrochlore, zircon, and ilmenite, but noticeably (at 600 mg/l) on sphene (6.9% extraction) aegirite-augite (7%), limonite (9%), microcline (20%) and nepheline (40.7%). However, at pH [illegible] (addition of hydrochloric acid) this picture changes radically. At pH = 1.4 and a concentration of sodium alkylsulfate of 200 mg/l, the extraction of pyrochlore, zircon, ilmenite, and sphene into the froth rises sharply to 84-94%, while that of limonite and microcline falls to nearly zero, and separation becomes possible (see Fig. 2). Addition of $FeCl_3$ (500 mg/l) at different pH values (an alkaline reaction is achieved by NaOH additions) influences the flotation of different minerals as shown in Fig. 5. The influences of $AlCl_3$ and $CuSO_4$ on the flotation of minerals with sodium alkylsulfate is shown in Figs. 7 and 9. Further tests showed that the addition of

Card 2/8

APPROVED FOR RELEASE: 08/23/2000 CIA-RDP86-00513R001548610003-3"

"APPROVED FOR RELEASE: 08/23/2000 CIA-RDP86-00513R001548610003-3

Concerning the Influence of Salts of Polyvalent Metals on Flotation of Nonsulfide Minerals with Sodium Alkylsulfate

77715
SOV/149-60-1-4/27

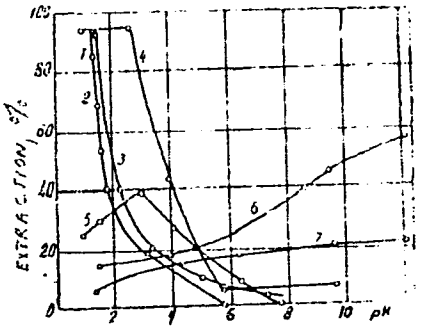

Fig. 2. Influence of pH on flotability of minerals with sodium alkylsulfate: (1) pyrochlore; (2) zircon; (3) ilmenite; (4) sphene (concentration of collector 200 mg/l); (5) aegirite-augite (600 mg/l); (6) limonite; (7) microcline (400 mg/l).

Card 3/8

APPROVED FOR RELEASE: 08/23/2000 CIA-RDP86-00513R001548610003-3"

"APPROVED FOR RELEASE: 08/23/2000 CIA-RDP86-00513R001548610003-3

Concerning the Influence of Salts of Polyvalent Metals on Flotation of Nonsulfide Minerals With Sodium Alkylsulfate

77715
SOV/149-60-1-4/27

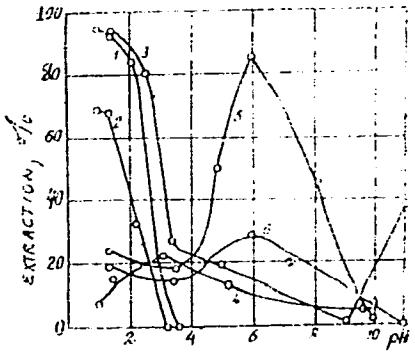

Fig. 5. Influence of pH on flotation of minerals with sodium alkylsulfate in presence of $FeCl_3$ (300 mg/l): pyrochlore; (2) zircon; (3) ilmenite; (4) sphene (concentration of collecting agent, 200 mg/l); (5) aegirite-augite; (6) limonite (600 mg/l).

Card 4/8

APPROVED FOR RELEASE: 08/23/2000 CIA-RDP86-00513R001548610003-3"

"APPROVED FOR RELEASE: 08/23/2000 CIA-RDP86-00513R001548610003-3

Concerning the Influence of Salts of Polyvalent Metals on Flotation of Nonsulfide Minerals with Sodium Alkylsulfate

77715
SOV/149-60-1-4/27

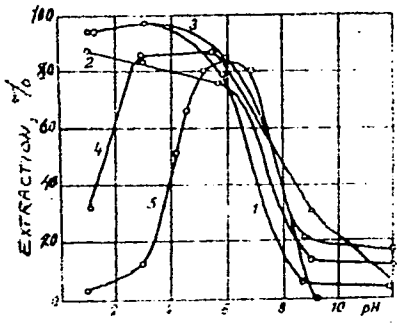

Fig. 7. Influence of pH on the flotation of minerals with sodium alkylsulfate (200 mg/l) in the presence of $AlCl_3$ (300 mg/l): (1) pyrochlore; (2) zirkon; (3) ilmenite; (4) sphene; (5) aegirite-augite.

Card 5/8

APPROVED FOR RELEASE: 08/23/2000 CIA-RDP86-00513R001548610003-3"

"APPROVED FOR RELEASE: 08/23/2000 CIA-RDP86-00513R001548610003-3

Concerning the Influence of Salts of Polyvalent Metals on Flotation of Nonsulfide Minerals with Sodium Alkylsulfate

77715
SOV/149-60-1-4/27

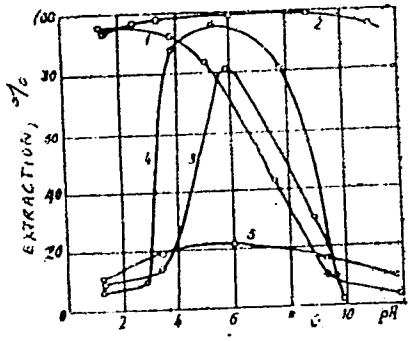

Fig. 9. Influence of pH on the flotation of minerals with sodium alkylsulfate in the presence of $CuSO_4$ (300 mg/l): (1) pyrochlore; (2) ilmenite; (3) aegirite-augite; (4) microcline; (5) limonite.

Card 6/8

APPROVED FOR RELEASE: 08/23/2000 CIA-RDP86-00513R001548610003-3"

"APPROVED FOR RELEASE: 08/23/2000 CIA-RDP86-00513R001548610003-3

Concerning the Influence of Salts of Polyvalent Metals on Flotation of Nonsulfide Minerals with Sodium Alkylsulfate

77715
SOV/149-60-1-4/27

$CaCl_2$ or $BaCl_2$ raises the rate of aegirite-augite and of microcline extraction at pH over 6 and does not noticeably affect the rate of extraction of other minerals. In the conclusions the authors recapitulate the experimental data stating that: (1) Moderate concentrations of iron, aluminum, copper, calcium and barium salts do not affect the flotation of pyrochlore, zircon, ilmenite, limonite, aegirite-augite, and microcline with sodium alkylsulfate at pH $<$ 2. (2) At higher pH, salts of polyvalent metals activate the flotation up to the pH value at which hydrolysis of these salts begins (except $FeCl_3$). (3) For best separation of pyrochlore, zircon, and ilmenite with sodium alkylsulfate, the flotation must be carried out at pH not more than 2. There are 12 figures; and 6 Soviet references.

Card 7/8

APPROVED FOR RELEASE: 08/23/2000 CIA-RDP86-00513R001548610003-3"

"APPROVED FOR RELEASE: 08/23/2000 CIA-RDP86-00513R001548610003-3

Concerning the Influence of Salts of Polyvalent Metals on Flotation of Nonsulfide Minerals With Sodium Alkylsulfate

77715
SOV/149-60-1-4/27

ASSOCIATION: Krasnoyarsk Institute of Non-Ferrous Metals. Chair of Mineral Concentration (Krasnoyarskiy institut tsvetnykh metallov. Kafedra obogashcheniya poleznykh iskopayemykh)

SUBMITTED: May 15, 1959

Card 8/8

APPROVED FOR RELEASE: 08/23/2000 CIA-RDP86-00513R001548610003-3"

"APPROVED FOR RELEASE: 08/23/2000 CIA-RDP86-00513R001548610003-3

PHASE I BOOK EXPLOITATION SOV/4726

Kiyev. Gosudarstvennyy nauchno-issledovatel'skiy i proyektnyy institut ugol'noy rudnoy, neftyanoy i gazovoy promyshlennosti

Nauchnyye zapiski, vyp. 1: Dobycha i pererabotka nefti (Scientific Reports of the State Scientific Research and Project Institute for the Coal, Mining, Oil, and Gas Industries, No. 1: Extraction and Processing of Petroleum) Kiyev, 1960. 91 p. 1,000 copies printed.

Sponsoring Agencies: UkrSSR Gosudarstvennaya planovaya komissiya Soveta Ministrov; Gosudarstvennyy nauchno-issledovatel'skiy i proyektnyy institut ugol'noy, rudnoy, neftyanoy, i gazovoy promyshlennosti "Ukrniiproyekt."

Editorial Council: V. P. Aksenov, S. Ye. Anushin, S. I. Balinskiy, V. Ya. Volchanskiy, D. I. Gol'tsev, V. S. Grinshteyn (Resp. Secretary), B. V. Dzbanovskiy, M. M. Zherbin (Chairman), A. P. Kotov, M. I. Logvinov, Yu. M. Ostrovskiy, L. M. Orzhekhovskaya, G. V. Prisedskiy, V. T. Sklyar (Deputy Chairman), N. Yu. Stasiv, and V. V. Tsaritsyn; Resp. Ed. for this Collection: V. T. Skylar, Candidate of Chemical Sciences; Ed.: A. Novik.

Card 1/5

PURPOSE: This collection of articles is intended for petroleum researchers, engineers, and refiners.

COVERAGE: The collection of articles deals with the production and refining of petroleum. Individual articles discuss the effect of bound water on the depletion of petroleum deposits under dissolved gas conditions, the effect of pressure on the viscosity of degasified petroleum, the structure of high-molecular petroleum hydrocarbons, the asphaltene and tar components of Carpathian crudes and menilite shale asphalts, and the aliphatic composition of alcohols produced by selective hydrogenation of the CO and H_2 product of synthesis. Other articles describe the carbamide dewaxing method for filtrates of wax distillates, the production of flotation agents with the use of oxidized petrolatum, and the investigation of six-membered aromatic and naphthenic hydrocarbons by means of infrared absorption spectra. The remaining articles are on the relations of pressure-volume-temperature-ethylene and on the phase equilibrium in ethylene-n-hexane, ethylene-cyclohexane, and ethylene-benzene systems. Specific volumes and compression coefficients at

Card 2/5

PETROLEUM REFINING

Sergiyenko, S. R., Ye. V. Lebedev, and A. A. Mikhnovskaya. On the Structure of High Molecular Hydrocarbons of Petroleum 13

Card 3/5

Sklyar, V. T., A. P. Lizogub, A. F. Mal'nev, and G. A. Puchkovskaya. Study of Six-Membered Aromatic and Naphthenic Hydrocarbons by Infrared Absorption Spectra 25

Sklyar, V. T., L. M. Samtsova, T. G. Sokolova, and N. V. Arof'yev. Asphaltene and Tar Components of Some Carpathian Petroleums and Asphalts of Menilite Shales 30

Sabirova, G. V., G. M. Shapovalov, and V. N. Karaseva. Production of an Effective Flotation Agent Based on Oxidized Petrolatum 56

Zhurba, A. S., and T. P. Zhuze. Comparison of the Ethylene-n-Hexane, Ethylene-Cyclohexane, and Ethylene-Benzene Systems by the p-v-t-N [pressure-volume-temperature-molar fraction of ethylene in the mixture] Relations and Phase Equilibrium 63

Zhuze, T. P., and A. S. Zhurba. Specific Volumes and Compression Coefficients of the n-Hexane-Ethylene System in the Interval of Pressure to 150 atm and Temperature of 30-150°C 78

Card 4/5

APPROVED FOR RELEASE: 08/23/2000 CIA-RDP86-00513R001548610003-3"

"APPROVED FOR RELEASE: 08/23/2000 CIA-RDP86-00513R001548610003-3

SHAPOVALOV, G. N.

SHAPOVALOV, G. N.: "The principles of cariation of follower electric drive for a broaching stand in connection with the properties of the electro-erosion working of metals in an aqueous medium." Min Higher Education USSR. Novocherkassk Polytechnic Inst imeni S. Ordzhonikidze. Novocherkassk, 1956.
(Dissertation for the degree of Doctorr of Technical Sciences.)

SO: Knizhnaya Letopis', No 36, 1956, Moscow.

APPROVED FOR RELEASE: 08/23/2000 CIA-RDP86-00513R001548610003-3"

"APPROVED FOR RELEASE: 08/23/2000 CIA-RDP86-00513R001548610003-3

69518

SOV/123-59-21-87807

Translation from: Referativnyy zhurnal. Mashinostroyeniye, 1959, Nr 21, p 95 (USSR)

18 5200

AUTHOR: Shapovalov, G.N.

TITLE: On the Characteristics of Electroerosion Machining of Metals

PERIODICAL: Tr. Novocherk. politekhn. in-ta, 1957, Vol 48/62, pp 127 - 135

ABSTRACT: When electrodes have been connected to the current in electroerosion machining, a pulverization of the metal takes place, which intensifies the decomposition of liquid in the preparatory phase of the spark discharge and does not lead to an immediate electric contact. Moreover, the evolution of hydrogen is the most important factor in the development of the discharge. An increase in efficiency of electroerosion machining can be obtained by the method of chemical "refinement" of the water, by adding agents with a considerable hydrogen content. A solution of hexamethylenetetramine in water, e.g., increases the efficiency by 15%. It was found that the erosion products during the discharge are shifting in direction of the acute angle between the incline cathode and the plane anode, which confirms the effect of electromagnetic forces, taking part in the metal ejection. An oscillograph recording of the discharge shows

Card 1/2

APPROVED FOR RELEASE: 08/23/2000 CIA-RDP86-00513R001548610003-3"

"APPROVED FOR RELEASE: 08/23/2000 CIA-RDP86-00513R001548610003-3

On the Characteristics of Electroerosion Machining of Metals 69518 SOV/123-59-21-87807

that in this case, the B.N. Zolotykh formula, for an effective resistance of the discharge, is nearer to reality than the VEI formulae, obtained for gaseous media. Technical recommendations are given for the application of water as a working medium for electric spark machining. 17 references.

B.I.A.

Card 2/2

APPROVED FOR RELEASE: 08/23/2000 CIA-RDP86-00513R001548610003-3"

"APPROVED FOR RELEASE: 08/23/2000 CIA-RDP86-00513R001548610003-3

S/144/60/000/009/007/007
E073/E135

AUTHORS: Zhuravleva, T.S., and Shapovalov, G.N.

TITLE: Inter-College Conference on Modern Developments in the Field of Dielectrics and Semiconductors

PERIODICAL: Izvestiya vysshikh uchebnykh zavedeniy, Elektromekhanika, 1960, No. 9, pp 161-162

TEXT: Between June 12 and 18, 1960 the Third Inter-College Conference on developments in the field of dielectrics and semiconductors was held with the participation of over 1200 representatives of various colleges, research organisations and industry. There were ten sections of the conference, namely: physics of dielectrics; inorganic dielectrics; organic dielectrics; effect of radiation on dielectrics and semiconductors; ferroelectrics and ferrites; crystals and crystallization; physics of semiconductors; semiconductor diodes and transistors; luminophors and photocells; semiconductor resistances and thermoelectric instruments. A total of 178 papers were discussed. The following participated in the discussions: Academician A.I. Berg, Corresponding Member Acad. Sci. USSR B.M. Vul,

Card 1/4

APPROVED FOR RELEASE: 08/23/2000 CIA-RDP86-00513R001548610003-3"

"APPROVED FOR RELEASE: 08/23/2000 CIA-RDP86-00513R001548610003-3

S/144/60/000/009/007/007
E073/E135

Inter-College Conference on Modern Developments in the Field of Dielectrics and Semiconductors

Professors N.P. Bogoroditskiy, D.N. Nasledov, N.G. Drozdov, D.M. Kazarnovskiy, A.F. Alabyshev, B.M. Tareyev, V.T. Renne, V.V. Pasynkov, and others. During the first plenary meeting Professor Bogoroditskiy read the paper on "Dielectrics and semiconductors in modern engineering". In his paper "Electronics and Cybernetics", Academician A.I. Berg tried to stimulate the scientific activity of university personnel, stating that the tempo of the progress in research work lags behind that of the development of the Soviet economy as a whole. It is particularly important to extend the work on semiconductors. Organisational problems became decisive in the development of the national economy and in this respect cybernetics is particularly important. In the conclusions he emphasised again the importance of research for the development of semiconductors. In his paper "Properties of certain $A_{III}B_{V}$ semiconductors" Professor D.N. Nasledov (Leningrad Institute of Physics and Technology, Acad.Sci. USSR) described the work of a team of scientists on the electric

Card 2/4

APPROVED FOR RELEASE: 08/23/2000 CIA-RDP86-00513R001548610003-3"

"APPROVED FOR RELEASE: 08/23/2000 CIA-RDP86-00513R001548610003-3

S/144/60/000/009/007/007
E073/E135

Inter-College Conference on Modern Developments in the Field of Electronics and Semiconductors

properties of modern semiconductors and the possibilities of their practical utilization under industrial conditions. He emphasized particularly work on the very promising semiconductors of the type $A_{III}B_{V}$, primarily InSb and GaAs. In InSb compounds the electron mobility at room temperature is of the order of 60 000 cm^2/sec. T.S. Zhuravleva (NPI) presented a paper on "Physics of Semiconductors", dealing with galvanomagnetic phenomena and their application for magnetic measurements. In the section on Semiconductor diodes and transistors, G.N. Shapovalov (NPI) presented a paper "On the temperature regime of p-n transitions" (thesis of Docent A.F. Gikis and the author). A paper on the state and the tasks in the field of manufacture of electrical insulation in the USSR was presented by the Chairman of the State Committee of the Electrical Industry, S.A. Yamanov; he reviewed foreign developments and the tasks facing the Soviet industry in that field. He paid particular attention to problems of improving industrial insulation materials and he outlined the

Card 3/4

APPROVED FOR RELEASE: 08/23/2000 CIA-RDP86-00513R001548610003-3"

"APPROVED FOR RELEASE: 08/23/2000 CIA-RDP86-00513R001548610003-3

S/144/60/000/009/007/007
E073/E135

Inter-College Conference on Modern Developments in the Field of Dielectrics and Semiconductors

tasks in this field during the Seven-year Plan period.

There are no figures, tables or literature references.

Card 4/4

APPROVED FOR RELEASE: 08/23/2000 CIA-RDP86-00513R001548610003-3"

"APPROVED FOR RELEASE: 08/23/2000 CIA-RDP86-00513R001548610003-3

S/144/62/000/011/002/003
D230/D308

AUTHORS: Gikis, Anton Feliksovich, Candidate of Technical Sciences, Professor and Shapovalov, Georgiy Nikolayevich, Candidate of Technical Sciences, Docent

TITLE: Indirect temperature determination in a p-n junction

PERIODICAL: Izvestiya vysshikh uchebnykh zavedeniy. Elektromekhanika, no. 11, 1962, 1301-1302

TEXT: The authors attempt to establish a connection between the p-n junction temperature and the body temperature of a transistor rectifier. Initially, graphs of reverse current v. junction were obtained. The rectifier was placed in a thermostat whose temperature could be varied. The reverse current was measured for the same d.c. potential at different temperatures. It was assumed that the junction temperature was not different from the body temperature or the thermostat temperature; under normal conditions the reverse current is small and has little heating effect on the rectifying layer. The first curve shows that the reverse current density

Card 1/2

APPROVED FOR RELEASE: 08/23/2000 CIA-RDP86-00513R001548610003-3"

"APPROVED FOR RELEASE: 08/23/2000 CIA-RDP86-00513R001548610003-3

depends mainly on temperature, and not on the reverse potential. The second curve represents reverse current v. forward current power dissipated in the rectifier, the third curve is junction temperature plotted v. losses in the rectifier due to forward current. The experiments were conducted on silicon rectifiers, but the conclusions drawn are more applicable to germanium rectifiers in which the dependence of the reverse current on potential does not exist. There is 1 figure.

ASSOCIATION: Novocherkasskiy politekhnicheskiy institut (Novocherkassk Polytechnic Institute)

SUBMITTED: July 5, 1962

APPROVED FOR RELEASE: 08/23/2000 CIA-RDP86-00513R001548610003-3"

"APPROVED FOR RELEASE: 08/23/2000 CIA-RDP86-00513R001548610003-3

VOYTENKO, I.P.; GORODNICHIN, N.T.; DEREVYANKO, L.V.; ZAKRASNYANYY, F.D.; PARSHIN, V.F.; PURTOV, L.P.; SIDOROV, N.T.; SHAPOVALOV, I.F.; KOMAROVA, Ye.V., red.; ROMANOVA, S.F., tekhn.red.

[Telegraph devices using noncontact switches] Telegrafnye ustroistva na beskontaktnykh perekliuchateliakh. Moskva, Izd-vo "Sviaz'," 1964. 295 p. (MIRA 17:3)

APPROVED FOR RELEASE: 08/23/2000 CIA-RDP86-00513R001548610003-3"

"APPROVED FOR RELEASE: 08/23/2000 CIA-RDP86-00513R001548610003-3

L 39887-66 EWT(d)/FSS-2 GD-2

ACC NR: AP6016672 SOURCE CODE: UR/0106/65/000/006/0031/0041

AUTHOR: Purtov, L. P.; Zamriy, A. S.; Shapovalov, I. F.

ORG: none

TITLE: Characteristic of error distributions in telephone channels during discrete signal transmission

SOURCE: Elektrosvyaz', no. 6, 1965, 31-41

TOPIC TAGS: telephone, radio relay, signal distortion equipment

ABSTRACT: After outlining the procedures for communication channel testing, this comprehensive article discusses the faithfulness of discrete information transmission through telephone cable and stationary radio-relay channels, the error distributions in time, the distribution of error groups, the combination distortion probability distribution, and the distribution of the quantity of errors within distorted combinations. Results show that 1) errors are distributed and tend, as a rule, to appear in groups; 2) the average reception error probability is a variable quantity and cannot be used for a reliable estimate of the transmission methods and of the correcting codes; 3) within distorted combinations the errors in cables and radio-relay channels are distributed approximately in the same manner (in spite of different values for the combination distortion probabilities); 4) during the phase difference operation the prevalent number of errors is even; and 5) interventions by the operating personnel are one of the reasons for the decrease in faithfulness of discrete information transmission. V. I. Shlyapoberskiy, V. Ye. Klinger, G. V. Simonova, S. O. Dzherayan, A. F. Zubritskaya, S. A. Kuz'mina, V. G. Bulin, E. P. Perfil'yev, N. I. Vovchenko, Z. M. Pronina and I. M. Cherkasov also participated in the organization and carrying out the tests of the communication channels. Orig. art. has: 11 figures and 5 tables. [JPRS]

SUB CODE: 17 / SUBM DATE: 16Oct64 / ORIG REF: 004 UDC: 621.391.883: 621.395.12

Card 1/1

APPROVED FOR RELEASE: 08/23/2000 CIA-RDP86-00513R001548610003-3"

"APPROVED FOR RELEASE: 08/23/2000 CIA-RDP86-00513R001548610003-3

PURTOV, L.P.; ZAMRIY, A.S.; SHAPOVALOV, I.F.

Nature of the distribution of errors in telephone channels with discrete signal transmission. Elektrosviaz' 19 no.6:31-41 Je '65. (MIRA 18:6)

APPROVED FOR RELEASE: 08/23/2000 CIA-RDP86-00513R001548610003-3"

"APPROVED FOR RELEASE: 08/23/2000 CIA-RDP86-00513R001548610003-3

SHAPOVALOV, I.

Iz opyta kapital'nogo vosstanovleniia mostov. [From the experience of large scale restoration of bridges]. (Zhel-dor. transport, 1948, no. 6, p. 67-74, illus.).
DLC: HE7.Z5

SO: Soviet Transportation and Communications, A Biblography, Library of Congress Reference Department, Washington, 1952, Unclassified.

APPROVED FOR RELEASE: 08/23/2000 CIA-RDP86-00513R001548610003-3"

"APPROVED FOR RELEASE: 08/23/2000 CIA-RDP86-00513R001548610003-3

SHAPOVALOV, I., brigadir

An example for construction workers in the whole country. Na stroi. Ros. no.1:1 Ja '61. (MIRA 14:6)
(Leningrad--Construction industry)

APPROVED FOR RELEASE: 08/23/2000 CIA-RDP86-00513R001548610003-3"

"APPROVED FOR RELEASE: 08/23/2000 CIA-RDP86-00513R001548610003-3

SHAPOVALOV, I., brigadir montazhnikov

Three houses each month. Na stroi. Ros. no.7:2 Jl '61. (MIRA 14:8)

1. Polyustrovskiy domostroitel'nyy kombinat Glavleningradstroya.
(Precast concrete construction--Technological innovations)

APPROVED FOR RELEASE: 08/23/2000 CIA-RDP86-00513R001548610003-3"

"APPROVED FOR RELEASE: 08/23/2000 CIA-RDP86-00513R001548610003-3

SHAPOVALOV, I., kand. tekhn. nauk

Expediency of improving the heat-retaining qualities of apartment houses. Zhil. stroi. no.5:25-26 '65. (MIRA 18:7)

APPROVED FOR RELEASE: 08/23/2000 CIA-RDP86-00513R001548610003-3"

"APPROVED FOR RELEASE: 08/23/2000 CIA-RDP86-00513R001548610003-3

MAZNYAK, F.I., inzh.; SHAPOVALOV, I.G., inzh.

Increasing the productive capacity of oil mills. Masl.-zhir. prom. 26 no.6:34-36 Je '60. (MIRA 13:6)

1. Liskinskiy masloekstraktsionnyy zavod.
(Liski--Oil industries)

APPROVED FOR RELEASE: 08/23/2000 CIA-RDP86-00513R001548610003-3"

"APPROVED FOR RELEASE: 08/23/2000 CIA-RDP86-00513R001548610003-3

AVER'YANOV, S.N., inzh.; SHAPOVALOV, I.F., inzh.

Automation and mechanization in making track links. Trakt. i sel'khozmash. 31 no. 5:39-43 My '61. (MIRA 14:5)

1. Stalingradskiy traktornyy zavod.
(Crawler tractors) (Automation)

APPROVED FOR RELEASE: 08/23/2000 CIA-RDP86-00513R001548610003-3"

"APPROVED FOR RELEASE: 08/23/2000 CIA-RDP86-00513R001548610003-3

AVER'YANOV, S.N.; SHAPOVALOV, I.F.

Special automatic machines for drilling and counterboring holes. Stan. i instr. 32 no. 5:19-20 My '61. (MIRA 14:5)
(Drilling and boring machinery)

APPROVED FOR RELEASE: 08/23/2000 CIA-RDP86-00513R001548610003-3"

"APPROVED FOR RELEASE: 08/23/2000 CIA-RDP86-00513R001548610003-3

SHAPOVALOV, I.F.

Reduction of discharge and storage losses of petroleum products. Neftianik 8 no.2:29-30 F '63. (MIRA 16:10)

1. Starshiy inzh. Vinnitskogo mezhoblastnogo upravleniya Glavnogo upravleniya po transportu i snabzheniyu neft'yu i nefteproduktami UkrSSR.

APPROVED FOR RELEASE: 08/23/2000 CIA-RDP86-00513R001548610003-3"

"APPROVED FOR RELEASE: 08/23/2000 CIA-RDP86-00513R001548610003-3

SHAPOVALOV, I.F., starshiy nauchnyy sotrudnik. Prinimali uchastiye: ZHADAN, Ya.M., gornyy inzh.; KALITVYANSKIY, I.T., avtomekhanik. NIKOLAYEV, V.F., otv.red.; VINOGRADOVA, G.V., red.izd-va; IL'INSKAYA, G.M., tekhn.red.

[Manual on the control of mine rescue equipment] Posobie po proverke gornospasatel'nogo oborudovaniia. Moskva, Gos.nauchno-tekhn. izd-vo lit-ry po gornomu delu, 1960. 125 p. (MIRA 13:6)

1. Stalinsk. Sovet narodnogo khozyaystva. Nauchno-issledovatel'skaya laboratoriya po gornospasatel'nomu delu. 2. TSentral'naya nauchno-issledovatel'skaya laboratoriya voyenizirovannykh gornospasatel'nykh chastey [TsNIL VGSCh] (for Shapovalov).
(Mine rescue work--Equipment and supplies)

APPROVED FOR RELEASE: 08/23/2000 CIA-RDP86-00513R001548610003-3"

"APPROVED FOR RELEASE: 08/23/2000 CIA-RDP86-00513R001548610003-3

ALEKSANDRIN, I.I.; SHAPOVALOV, I.F.

Automatic production line for machining crawler links of the DT-54 tractors. Biul. tekh.-ekon. inform. no.10:15-17 '59. (MIRA 13:3)

(Crawler tractors) (Grinding machines)

APPROVED FOR RELEASE: 08/23/2000 CIA-RDP86-00513R001548610003-3"

"APPROVED FOR RELEASE: 08/23/2000 CIA-RDP86-00513R001548610003-3

SHAPOVALOV, I.F.; AVER'YANOV, S.N.

The DT-55A swamp tractor. Biul.tekh.-ekon.inform. no.8: 62-63 '59. (MIRA 13:1)
(Tractors)

APPROVED FOR RELEASE: 08/23/2000 CIA-RDP86-00513R001548610003-3"

"APPROVED FOR RELEASE: 08/23/2000 CIA-RDP86-00513R001548610003-3

SHAPOVALOV, I.G.

Universal nozzle for the hoses of discharge stand pipes. Transp. i khran. nefti i nefteprod. no.4:37 '64 (MIRA 17:7)

1. Vinnitskoye mezhoblastnoye Upravleniye Glavneftesnabsbyta UkrSSR.

APPROVED FOR RELEASE: 08/23/2000 CIA-RDP86-00513R001548610003-3"

"APPROVED FOR RELEASE: 08/23/2000 CIA-RDP86-00513R001548610003-3

GUSHCHIN, V.A.; BEL'CHENKO, A.Ya., inzh.Prinimal uchastiye SHAPOVALOV, I.I.[deceased]; KAMENETSKIY, V.Ya., inzh., otv. red.; GRINSHPON, F.O., red.; MALYAVKO, A.V., tekhn.red.

[Modernization of equipment is an important means of technological progress; a bibliography]Modernizatsiia oborudovaniia - vazhnoe sredstvo tekhnicheskogo progressa; bibliograficheskii ukazatel'. L'vov, Izd-vo L'vovskogo univ., 1960. 151 p. (MIRA 15:12)

1. Akademiya nauk URSR, Kiev. Biblioteka, Lvov. Viddil bibliografii.

(Bibliography--Technological innovations)

APPROVED FOR RELEASE: 08/23/2000 CIA-RDP86-00513R001548610003-3"

"APPROVED FOR RELEASE: 08/23/2000 CIA-RDP86-00513R001548610003-3

SHAPOVALOV, I.K.

Bibliography of works published by members of the A.A. Baikov Institute of Metallurgy of the Academy of Sciences of the U.S.S.R. Compiled by I.K. Shapovalov. Trudy Inst. met. no.6:138-151 '60. (Bibliography--Metallurgy) (MIRA 13:8)

APPROVED FOR RELEASE: 08/23/2000 CIA-RDP86-00513R001548610003-3"

"APPROVED FOR RELEASE: 08/23/2000 CIA-RDP86-00513R001548610003-3

TSYLEV, Leonid Mikhaylovich; DMITRIYEV, Georgiy Nikolayevich; MAKHALOV, Pavel Nikolayevich; SHAPOVALOV, I.K., red. ZINGER, S.L., red. izd-va

[Production and consumption of lignite coke in the German Democratic Republic] Proizvodstvo i potreblenie burougol'-nogo koksa v Germanskoi Demokraticheskoi Respublike. Moskva, Metallurgizdat, 1961. 79 p. (MIRA 15:7)
(Germany, East--Lignite) (Coke)

APPROVED FOR RELEASE: 08/23/2000 CIA-RDP86-00513R001548610003-3"

"APPROVED FOR RELEASE: 08/23/2000 CIA-RDP86-00513R001548610003-3

SLAVYANSKIY, V.T.; SHTEYNBOK, G.Yu., inzh., ved. red.; SHAPOVALOV, I.K., inzh., red.; PONOMAREV, V.A., tekhn. red.

[Automatic viscosimeter designed by the State Optical Institute] Avtomaticheskii viskozimetr GOI. Moskva, Filial Vses. in-ta nauchn. i tekhn.informatsii, 1958. 32 p. (Peredovoi nauchno-tekhnicheskii i proizvodstvennyi opyt. Tema 34. No. P-58-55/7) (MIRA 16:2)

(Viscosimeter)

APPROVED FOR RELEASE: 08/23/2000 CIA-RDP86-00513R001548610003-3"

"APPROVED FOR RELEASE: 08/23/2000 CIA-RDP86-00513R001548610003-3

SHAPOVALOV, I.M. (Stryy (Drogobychskoy obl.), ul.Franko, d.6a.

Acute intestinal obstruction caused by concretions of hawthorn berries. Nov.khir.arkh. no.1:121 Ja-F '59. (MIRA 12:6)
(INTESTINES--OBSTRUCTIONS)

APPROVED FOR RELEASE: 08/23/2000 CIA-RDP86-00513R001548610003-3"

"APPROVED FOR RELEASE: 08/23/2000 CIA-RDP86-00513R001548610003-3

SHAPOVALOV, I.N., Cand Tech Sci--(diss) " Study of certain problems of the flotation of pyrrho-chlore and zircon from complex ~~poorly~~ not easily concentrated ores." Mos, 1958. 15 pp (Min of Higher Education USSR. Mos Inst of Non-ferrous Metals and Gold im. M.I.Kalinin. Chair of ~~the~~ " ~~Enrichment~~ Concentration of Ores of Rare and Radioactive Metals"), 150 copies (KL,48-58,105)

-58-

APPROVED FOR RELEASE: 08/23/2000 CIA-RDP86-00513R001548610003-3"

"APPROVED FOR RELEASE: 08/23/2000 CIA-RDP86-00513R001548610003-3

SHAPOVALOV, I.M.; RADCHENKO, I.V.

Roentgenographic investigation of copper acetate solutions in water [with summary in English]. Ukr. fiz. zhur. 3 no.6:815-819 N-D '58. (MIRA 12:6)

1. Dnepropetrovskiy metallurgicheskiy institut.
(Copper acetate) (X rays)

APPROVED FOR RELEASE: 08/23/2000 CIA-RDP86-00513R001548610003-3"

"APPROVED FOR RELEASE: 08/23/2000 CIA-RDP86-00513R001548610003-3

SHAPOVALOV, I.M. (Stryy, ul. Iv.Franko, d.6, kv.1)

Perforative gastric ulcers in a patient with endarteritis obliterans. Nov. khir. arkh. no.2:119-120 Mr-Ap '60. (MIRA 14:11)

1. Khirurgicheskoye otdeleniya Stryyskoy gorodskoy bol'nitsy.
(PEPTIC ULCER) (ARTERIES--DISEASES)

APPROVED FOR RELEASE: 08/23/2000 CIA-RDP86-00513R001548610003-3"

"APPROVED FOR RELEASE: 08/23/2000 CIA-RDP86-00513R001548610003-3

SHAPOVALOV, I.M. (Stryy, L'vovskoy oblasti, ul.I.Franko,d.6a, kv.1)

Lowering the mortality in the surgical treatment of acute intestinal obstruction. Klin.khir. no.7:50-53 Jl '62. (MIRA 15:9)

1. Khirurgicheskoye otdeleniye Stryyskoy gorodskoy bol'nitsy L'vovskoy oblasti.

(INTESTINES--OBSTRUCTIONS)

APPROVED FOR RELEASE: 08/23/2000 CIA-RDP86-00513R001548610003-3"

"APPROVED FOR RELEASE: 08/23/2000 CIA-RDP86-00513R001548610003-3

SHAPOVALOV, I.M.; RADCHENKO, I.V.; LESOVITSKAYA, M.K.

X-ray diffraction study of aqueous sulfate solutions. Zhur.strukt. khim. 4 no.1:10-13 Ja-F '63. (MIRA 16:2)

1. Dnepropetrovskiy metallurgicheskiy institut.
(Alkali metal sulfates) (X rays--Diffraction)

APPROVED FOR RELEASE: 08/23/2000 CIA-RDP86-00513R001548610003-3"

"APPROVED FOR RELEASE: 08/23/2000 CIA-RDP86-00513R001548610003-3

MARANOCHKIN, Yu.V.; NEDASHKOVSKIY, F.P., nauchnyy sotrudnik; [illegible], I.N.

Working according to a unified plan. Put' i put khoz. 8 no.10:4 '64. (MIRA 17:12)

1. Vsesoyuznyy nauchno-issledovatel'skiy institut zheleznodorozhnogo transporta Ministerstva putey soobshcheniya (for Nedashkovskiy).
2. Nachal'nik Moskovsko-Rizhskoy distantsii puti (for Shapovalov).

APPROVED FOR RELEASE: 08/23/2000 CIA-RDP86-00513R001548610003-3"

"APPROVED FOR RELEASE: 08/23/2000 CIA-RDP86-00513R001548610003-3

SHAPOVALOV, I.P.

One-stage extraperitoneal surgical approach to the adrenals and lumbar portion of the sympathetic nerve stem. Vest. khir. 71 no.1:35-39 1951. (CIML 20:8)

1. Of the Faculty Surgical Clinic (Head--P.N. Napalkov) and of the Department of Operative Surgery and Topographic Anatomy (Head--A.Yu. Sozon-Yaroshevich), Leningrad Sanitary-Hygienic Medical Institute.

APPROVED FOR RELEASE: 08/23/2000 CIA-RDP86-00513R001548610003-3"

"APPROVED FOR RELEASE: 08/23/2000 CIA-RDP86-00513R001548610003-3

SHAPOVALOV, Ivan Prokof'yevich

[Spontaneous gangrene as an endocrine-vegetative thromboangiitis obliterans] Samoproizvol'naia gangrena kak endokrinno-vegetativnyi obliteriruiushchii arterioz. Leningrad, Medgiz, 1958. 259 p.
(GANGRENE) (MIRA 12:5)

APPROVED FOR RELEASE: 08/23/2000 CIA-RDP86-00513R001548610003-3"

"APPROVED FOR RELEASE: 08/23/2000 CIA-RDP86-00513R001548610003-3

SHAPOVALOV, I.P.

Selection of surgical technic for endarteritis obliterans in relation to its clinical course. Klin.med.,Moskva 28 no.12:30-35 Dec 50. (CLML 20:5)

1. Of the Faculty Surgical Clinic (Head--Prof.P.N.Napalkov),Leningrad Sanitary-Hygienic Medical Institute, Leningrad.

APPROVED FOR RELEASE: 08/23/2000 CIA-RDP86-00513R001548610003-3"

"APPROVED FOR RELEASE: 08/23/2000 CIA-RDP86-00513R001548610003-3

SHAPOVALOV, I.S.

Selecting rated temperature drop for water in single pipe water heating systems installed in multistorie apartment and public buildings. Vod.i san. tekh. no.3:26-29 Je'55. (MIRA 8:12)
(Hot-water heating)

APPROVED FOR RELEASE: 08/23/2000 CIA-RDP86-00513R001548610003-3"

"APPROVED FOR RELEASE: 08/23/2000 CIA-RDP86-00513R001548610003-3

OSTERMAN,N.A., kandidat arkhitektury; NAUMOVA,N.A., inzhener; KHRUSTOV,S.Ya., inzhener; SHAPOVALOV,I.S., inzhener

Plans for apartment houses designed by GLAVSTANDARTDOM. Rats.i izobr.preds. v stroi. no.102:15-24 '55. (MIRA 8:10)
(Buildings, Prefabricated)

APPROVED FOR RELEASE: 08/23/2000 CIA-RDP86-00513R001548610003-3"

"APPROVED FOR RELEASE: 08/23/2000 CIA-RDP86-00513R001548610003-3

SHAPOVALOV, I., inzh.

Heating a house. Tekh. mol. 25 no.11:30-31 N '57. (MLRA 10:11)
(Heating)

APPROVED FOR RELEASE: 08/23/2000 CIA-RDP86-00513R001548610003-3"

"APPROVED FOR RELEASE: 08/23/2000 CIA-RDP86-00513R001548610003-3

. SHAPOVALOV, I.S.

Plinth heating. Vod. i san. tekh. no. 7:19-21 Jl '58. (MIRA 11:7)
(Radiant heating)

APPROVED FOR RELEASE: 08/23/2000 CIA-RDP86-00513R001548610003-3"

"APPROVED FOR RELEASE: 08/23/2000 CIA-RDP86-00513R001548610003-3

SHAPOVALOV, I.S., inzh.

Using air-entrained "keralit" and foam glass in constructing ventilation channels and shafts. Gor. khoz. Mosk. 32 no.11:31-33 N '58.
(Glass, Cellular) (Lightweight concrete) (Ventilation)

APPROVED FOR RELEASE: 08/23/2000 CIA-RDP86-00513R001548610003-3"

"APPROVED FOR RELEASE: 08/23/2000 CIA-RDP86-00513R001548610003-3

SHAPOVALOV, I.S.

Magnitude of the hydraulic resistance of ring diaphragms in the closing sections of standpipes of single-pipe hot-water heating systems. Vod.i san.tekh. no.8:25-27 Ag '59. (MIRA 12:11)

(Heating pipes)

APPROVED FOR RELEASE: 08/23/2000 CIA-RDP86-00513R001548610003-3"

"APPROVED FOR RELEASE: 08/23/2000 CIA-RDP86-00513R001548610003-3

SHAPOVALOV, I.S., inzh.

Panel heating. Gor.khoz. Mosk. 34 no.12:28-31 D '60. (MIRA 13:12)

(Moscow--Radiant heating)

APPROVED FOR RELEASE: 08/23/2000 CIA-RDP86-00513R001548610003-3"

"APPROVED FOR RELEASE: 08/23/2000 CIA-RDP86-00513R001548610003-3

SHIFRIN, M.A., kand.tekhn.nauk (g.Moskva); SHAPOVALOV, I.S., inzh.; KUROCHKIN, M.; YERSHOV, A.V., starshiy nauchnyy sotrudnik; SHEVEL'KOV, V.L., prof., doktor tekhn.nauk

Heat engineering standards and regulations in construction should be revised. Inzh.-fiz. zhur. 4 no.9:120-126 S '61. (MIRA 14:8)

1. Issledovatel'skiy institut eksperimental'nogo proyektirovaniya Akademii stroitel'stva i arkhitektury SSSR (for Shapovalov). 2. TSentral'nyy institut nauchnoy informatsii po stroitel'stvu i arkhitekture Akademii stroitel'stva i arkhitektury SSSR (for Kurochkin). 3. Nauchno-issledovatel'skiy institut po stroitel'stvu Akademii stroitel'stva i arkhitektury SSSR, g. Tashkent (for Yershov). 4. MKhTIMP (for Shevel'kov).

(Building laws) (Heat engineering)

APPROVED FOR RELEASE: 08/23/2000 CIA-RDP86-00513R001548610003-3"

"APPROVED FOR RELEASE: 08/23/2000 CIA-RDP86-00513R001548610003-3

SHAPOVALOV, I.S.

Investigating the heat emission of concrete baseboard heating devices. Vod. i san. tekh. no.1:22-25 Ja '61. (MIRA 14:9)
(Radiant heating)

APPROVED FOR RELEASE: 08/23/2000 CIA-RDP86-00513R001548610003-3"

"APPROVED FOR RELEASE: 08/23/2000 CIA-RDP86-00513R001548610003-3

SHAPOVALOV, I.S., inzh.

Heating of large-block and large-panel buildings. Vod.i san. tekh. no.5:4-7 My '62. (MIRA 15:7)
(Heating)

APPROVED FOR RELEASE: 08/23/2000 CIA-RDP86-00513R001548610003-3"

"APPROVED FOR RELEASE: 08/23/2000 CIA-RDP86-00513R001548610003-3

SHAPOVALOV, I.S., kand.tekhn.nauk

Reducing fuel consumption in the heating of buildings.
Vod.i san.tekh. no.12:1-3 D '65. (MIRA 19:1)

APPROVED FOR RELEASE: 08/23/2000 CIA-RDP86-00513R001548610003-3"

"APPROVED FOR RELEASE: 08/23/2000 CIA-RDP86-00513R001548610003-3

KIRZAN, G.; SHAPOVALOV, K.; VAZENMALIER, N., starshiy inzhener

Mechanized fattening farm. Sel'. stroi. 16 no.9:9-10 S '61. (MIRA 14:9)

1. Glavnyy inzhener Omskogo oblastnogo upravleniya po stroitel'stvu v kolkhozakh (for Kirzan). 2. Glavnyy konstruktor Sibirskogo nauchno-issledovatel'skogo instituta sel'skogo khozyaystva (for Shapovalov).
(Kormilovka District--Swine houses and equipment)

APPROVED FOR RELEASE: 08/23/2000 CIA-RDP86-00513R001548610003-3"

"APPROVED FOR RELEASE: 08/23/2000 CIA-RDP86-00513R001548610003-3

SHAPOVALOV, K.S.; VAZENMILLER, N.K., inzh.

The carrusel type milking conveyor. Zhivotnovodstvo 24 no.9:79-85 S '62. (MIRA 15:12)

1. Glavnyy konstruktor konstruktorskogo byuro Sibirskogo nauchno-issledovatel'skogo instituta sel'skogo khozyaystva (for Zhapovalov).
(Omsk Province—Milking)

APPROVED FOR RELEASE: 08/23/2000 CIA-RDP86-00513R001548610003-3"

"APPROVED FOR RELEASE: 08/23/2000 CIA-RDP86-00513R001548610003-3

SHAPOVALOV, K.G.; DMITRIYEV, Yu.N., red.

[The KDUE-16 "Omichka" circular conveyor-type milking system; recommendations for its assembly and operation] Konveierno-kol'tsevaia doil'naia ustanovka KDUE-16 "Omichka"; rekomendatsii po montazhu i ekspluatatsii. Moskva, Biuro tekhn. informatsii, 1963. 36 p. (MIRA 17:6)

1. Soyuzsel'khoztekhnika, Vsesoyuznoye ob"yedineniye.

APPROVED FOR RELEASE: 08/23/2000 CIA-RDP86-00513R001548610003-3"

"APPROVED FOR RELEASE: 08/23/2000 CIA-RDP86-00513R001548610003-3

SHAPOVALOV, L. A.

Influence of inside pressure on critical shearing stress in an infinitely long cylindrical shell. Prikl. mat. i mekh.20 no.5:669-671 S-O '56. (MLRA 10:3)

(Elastic plates and shells)

APPROVED FOR RELEASE: 08/23/2000 CIA-RDP86-00513R001548610003-3"

"APPROVED FOR RELEASE: 08/23/2000 CIA-RDP86-00513R001548610003-3

SHAPOVALOV, L. A.

"The Influence of Internal Pressure on the Critical Shear Stress of an Infinitely Long Cylindrical Shell," by L. A. Shapovalov, Prikladnaya Matematika i Mekhanika, Vol 100, No 5, Sep/Oct 56, pp 669-671

The author generalizes on the work of S. P. Timoshenko regarding the buckling of an infinitely long cylindrical shell subjected to torsion. The author also calculates the rigidity of a similar shell subjected simultaneously to torsion and internal pressures.

Sum 1219

APPROVED FOR RELEASE: 08/23/2000 CIA-RDP86-00513R001548610003-3"

"APPROVED FOR RELEASE: 08/23/2000 CIA-RDP86-00513R001548610003-3

AUTHOR: Shapovalov, L.A. (Moscow) 40-22-1-10/15

TITLE: The Influence of Nonuniform Heating on the Stability of a Compressed Bar (Vliyaniye neravnomernogo nagreva na ustoychivost' szhatogo sterzhnya)

PERIODICAL: Prikladnaya Matematika i Mekhanika, 1958, Vol 22 Nr 1, pp 119-123 (USSR)

ABSTRACT: The author investigates the stability of a compressed bar under small elasto-plastic deformations. The bar has a rectangular cross section and is to be heated nonuniformly. The pressure diagram of the applied bar material can be arbitrary. It is supposed that the temperature field $T(x,y,z)$ is constant along the bar and changes linearly in the direction of the deformation of the bar. Under the supposed boundary conditions the nonuniform heating of the bar causes no additional curvature of the bar axis. The mentioned problem finally leads to the determination of the eigenvalues of a homogeneous differential equation which, correspondingly to the Eulerian break problems, leads to certain critical loads.
For an ideally plastic material as well as for a material with a linear domain of consolidation the results can be given in a

Card 1/2

APPROVED FOR RELEASE: 08/23/2000 CIA-RDP86-00513R001548610003-3"

"APPROVED FOR RELEASE: 08/23/2000 CIA-RDP86-00513R001548610003-3

The Influence of Nonuniform Heating on the Stability of a Compressed Bar 40-22-1-10/15

closed form. It appears that the influence of the heating becomes perceptible in the range of small elastic-plastic deformations. There are 2 figures.

SUBMITTED: November 5, 1957

Card 2/2

APPROVED FOR RELEASE: 08/23/2000 CIA-RDP86-00513R001548610003-3"

"APPROVED FOR RELEASE: 08/23/2000 CIA-RDP86-00513R001548610003-3

[illegible], L. A., [illegible] — (diss) "[illegible] equations [illegible] of [illegible] forces [illegible] compartment [illegible]," [illegible], 19[illegible], 10 pp ([illegible] Physics Institute) ([illegible])

APPROVED FOR RELEASE: 08/23/2000 CIA-RDP86-00513R001548610003-3"

"APPROVED FOR RELEASE: 08/23/2000 CIA-RDP86-00513R001548610003-3

82495

S/040/60/024/04/10/023
C 111/ C 333

24.5100

AUTHORS: Balabukh, L. J., Shapovalov, L. A. (Moscow)

TITLE: On the Variation Equations of Thermoelasticity

PERIODICAL: Prikladnaya matematika i mekhanika, 1960, Vol. 24, No. 4, pp. 703-707

TEXT: Generalizing the result of Biot (Ref.1) the author sets up the variation equation of the thermoelastic problem in presence of heat sources and negative sources:

$$(23)\quad \iiint\limits_{(V)} \left[\delta\left(W + \frac{C\theta^2}{2T}\right) - \frac{\theta}{T}\,\delta W\right] dv + \iiint\limits_{(V)} \frac{T}{K}\,\frac{d\bar{S}}{d\tau}\,\delta\bar{S}\,dv = \iint\limits_{\Omega} (\bar{p}\,\delta\bar{u} + \theta\,\bar{n}\,\delta\bar{s})\,d\Omega\,.$$

Here T is the constant absolute temperature of the body in the moment $\tau = 0$ in the state free of stress, W the specific potential energy of the isothermic deformation ($\theta = 0$), $\bar{p}$ the vector of intensity of the surface stress,, $\bar{n}$ the unit vector of the internal normal, $\bar{u}$ displacement vector, C heat capacity for constant volume, θ temperature increase;

Card 1/2

APPROVED FOR RELEASE: 08/23/2000 CIA-RDP86-00513R001548610003-3"

"APPROVED FOR RELEASE: 08/23/2000 CIA-RDP86-00513R001548610003-3

82495

S/040/60/024/04/10/023
C 111/ C 333

On the Variation Equations of Thermoelasticity

$\bar{S}$ is defined by

$$(15) \qquad \frac{d\bar{S}}{d\tau} = -\frac{K}{T} \operatorname{grad} \Theta ,$$

where K is the coefficient of thermal conductivity.

The author shows under which conditions the generalized Biot equation changes over into the variation equation of thermodynamics of the equilibrium processes.

L. M. Kachanov is mentioned by the author.

There are 3 references: 1 Soviet and 2 American.

SUBMITTED: April 7, 1960

Card 2/2

APPROVED FOR RELEASE: 08/23/2000 CIA-RDP86-00513R001548610003-3"

"APPROVED FOR RELEASE: 08/23/2000 CIA-RDP86-00513R001548610003-3

BALABUKH, L. I. (Moskva); SHAPOVALOV, L. A. (Moskva)

Variational equations of thermoelasticity. Prikl. mat. i mekh. 24 no.4:703-707 Jl-Ag '60. (MIRA 13:9)
(Thermodynamics) (Elasticity)

APPROVED FOR RELEASE: 08/23/2000 CIA-RDP86-00513R001548610003-3"

"APPROVED FOR RELEASE: 08/23/2000 CIA-RDP86-00513R001548610003-3

FRIDMAN, Ya.B.; SOBOLEV, N.D.; BORISOV, S.V.; YEGOROV, V.I.; KONOPLENKO, V.P.; MOROZOV, Ye.M.; SHAPOVALOV, L.A.; SHORR, B.F.

Heat resistance problems in nuclear engineering. Atom.energ. 10 no.6:606-619 Je '61. (MIRA 14:6)
(Refractory materials)

APPROVED FOR RELEASE: 08/23/2000 CIA-RDP86-00513R001548610003-3"

"APPROVED FOR RELEASE: 08/23/2000 CIA-RDP86-00513R001548610003-3

BALABUKH, L.I. (Moskva); SHAPOVALOV, L.A. (Moskva)

Contact problems of the coupling of zero-torque shells of revolution with elastic rings. Izv.AN SSSR.Otd.tekh.nauk.Mekh. i mashinostr. no.4:77-90 Jl-Ag '62. (MIRA 15:8)

(Elastic plates and shells)

APPROVED FOR RELEASE: 08/23/2000 CIA-RDP86-00513R001548610003-3"

"APPROVED FOR RELEASE: 08/23/2000 CIA-RDP86-00513R001548610003-3

S/782/62/000/000/003/003

AUTHOR: Shapovalov, L.A.

TITLE: The thermal stability of plates and shells.

SOURCE: Prochnost' i deformatsiya v neravnomernykh temperaturnykh polyakh; sbornik nauchnykh rabot. Ed. by Ya. B. Fridman. Moscow. Gosatomizdat, 1962, 241-254.

TEXT: The results of several recent Soviet and Western studies on the buckling of plates and shells at high temperatures and under arbitrary temperature distributions are summarized for the information of structural design engineers. Upon presentation of the method employing the extremal values of the potential thermal-stress energy accumulated in a system, Hoff's criticism of that method as not being rigorous because of its employment of stress criteria, rather than the more pertinent deformation criteria, is aired (Hoff, N. Roy Aero.Soc., J., no.563, 1957). The most rigorous solution can only be obtained from the use of the extremal principle for the thermodynamic potentials of the system. The thermal buckling of plane and curvilinear plates is examined according to Hoff's method, previously cited, the method of I.Klosner and M.Forray (IAS, J., no.3, 1958), and the method of M.S.Ganeyeva (Uch.zap. Kazanskogo un-ta, v.116, no.1, 1956). The

Card 1/2

APPROVED FOR RELEASE: 08/23/2000 CIA-RDP86-00513R001548610003-3"

"APPROVED FOR RELEASE: 08/23/2000 CIA-RDP86-00513R001548610003-3

The thermal stability of plates and shells. S/782/62/000/000/003/003

problem of a circular plate of uniform thickness, heated to an arbitrary axially-symmetrical radial temperature distribution, is examined in accordance with E.I. Grigolyuk's method (Inzhenernyy sbornik, v.6, 1950). The buckling of a cylindrical shell upon heating is examined with reference to N. Hoff's conclusions (above-cited paper) that only temperature fields that are functions of the peripheral or axial coordinates are destabilizing, whereas fields that are functions of the radial coordinate are not destabilizing; W. Zuk's brief note (IAS, J., no.5, 1957, 389) on the thermal buckling of clamped cylindrical shells is summarized. There are 9 figures and 5 references (all cited above; 2 Russian-language Soviet papers and 3 English-language papers).

ASSOCIATION: None given.

Card 2/2

APPROVED FOR RELEASE: 08/23/2000 CIA-RDP86-00513R001548610003-3"

"APPROVED FOR RELEASE: 08/23/2000 CIA-RDP86-00513R001548610003-3

SHAPOVALOV, L.A. (Moskva)

Stability of a compressed circular ring in case of a nonlinear stress distribution in cross sections of the ring. Izv.AN SSSR.Otd.tekh.nauk.Mekh. i mashinostr. no.4:140-142 Jl-Ag '62. (MIRA 15:8)

(Elastic plates and shells)

APPROVED FOR RELEASE: 08/23/2000 CIA-RDP86-00513R001548610003-3"

"APPROVED FOR RELEASE: 08/23/2000 CIA-RDP86-00513R001548610003-3

L 11418-63 EWP(q)/EWT(m)/BDS AFFTC/ASD JD

S/032/63/029/005/012/022

54

AUTHORS: Shapovalov, L. A. and Fridman, Ya. B.

TITLE: On the conditions of kinetic similarity during mechanical tests

PERIODICAL: Zavodskaya laboratoriya, v. 29, no. 5, 1963, 590-593

TEXT: In modelling processes of deformation and destruction in mechanical tests, static concepts are inadequate and other types of similarity, especially the kinetic, must be taken into account. The author applies the methods of modelling to a study of the kinetics of fracture of a visoelastic body using the π-theorem of dimensional analysis to obtain the dynamic similarity criterion and to a study of simplified brittle fracture of an elastic medium by means of a very simplified mechanical model. There are two figures.

ASSOCIATION: Moskovskiy inzhenerno-fizicheskiy institut (Moscow Engineering-Physics Institute)

ja/CR

Card 1/1

APPROVED FOR RELEASE: 08/23/2000 CIA-RDP86-00513R001548610003-3"

"APPROVED FOR RELEASE: 08/23/2000 CIA-RDP86-00513R001548610003-3

ACC NR: AT6035484 SOURCE CODE: UR/2572/66/000/012/0032/0062

AUTHOR: Balabukh, L. I. (Doctor of technical sciences, Professor); Shapovalov, L. A. (Candidate of technical sciences)

ORG: None

TITLE: Investigation of temperature stresses in a cylindrical shell reinforced by longitudinal ribs

SOURCE: Raschety na prochnost'; teoreticheskiye i eksperimental'nyye issledovaniya prochnosti mashinostroitel'nykh konstruktsiy. Sbornik statey, no. 12, 1966, 32-62

TOPIC TAGS: cylindric shell structure, shell theory, temperature stress, reinforced shell structure

ABSTRACT: The authors use the methods of shell theory for solving the problem of temperature stresses in structures made up of longitudinal ribs and connecting cylindrical panels. Two theories are used: the moment theory of shells and the semi-momentless theory of V. Z. Vlasov. Numerical results are given. The solutions may be used for determining temperature stresses in the given reinforced shell structure and for evaluating the accuracy of various approximate computational methods. A regular system is considered consisting of $2m$ cylindrical panels and intermediate longitudinal ribs forming a closed reinforced shell of radius R (Figure 1). The coordinate system is taken on the middle surface along axes x, y coinciding with the axes of symmetry of an individual cylindrical panel (Figure 2). It is assumed that

APPROVED FOR RELEASE: 08/23/2000 CIA-RDP86-00513R001548610003-3"

"APPROVED FOR RELEASE: 08/23/2000 CIA-RDP86-00513R001548610003-3

ACC NR: AT6035484

the longitudinal sides of the panels are hinged to the elastic ribs and that the bending rigidity of the ribs is negligible. The temperatures $t_0(x)$ of all ribs are identical and constant within the cross sectional limits, and may vary along the axis of each rib. The temperature of each panel is taken as zero. The elastic characteristics and coefficient of linear expansion of the ribs are independent of temperature and have values corresponding to some average rib temperature. The results show that the semimomentless theory of shells may be used for determining the temperature stresses in longitudinal ribs with an accuracy which is satisfactory for problems of this type. This theory is not so useful for calculating temperature stresses in the shell itself. Orig. art. has: 13 figures, 64 formulas.

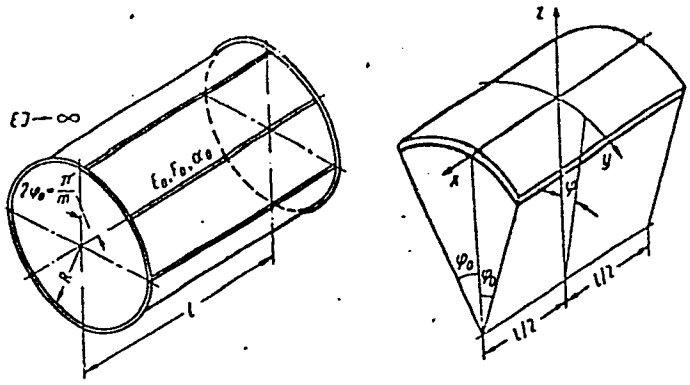

SUB CODE: ~~20, 12~~ 13/ SUBM DATE: None/ ORIG REF: 006

Card 2/2

APPROVED FOR RELEASE: 08/23/2000 CIA-RDP86-00513R001548610003-3"

"APPROVED FOR RELEASE: 08/23/2000 CIA-RDP86-00513R001548610003-3

23740

4

18.8200 2808, 1454, 1416

S/089/61/010/006/005/011
B136/B201

21.1300 (1138, 1425, 1504)

AUTHORS: Fridman, Ya. B., Sobolev, N. D., Borisov, S. V. Yegorov, V. I., Konoplenko, V. P., Morozov, Ye. M. Shapovalov, L. A. and Shorr, B. F.

TITLE: Some problems of thermal strength in reactor construction

PERIODICAL: Atomnaya energiya, v. 10, no. 6, 1961, 606 - 619

TEXT: The general idea of the failure of thermal strength includes two types of fracture: the gradual (subcritical) fracture as a consequence of an extreme deformation or of a great number of cracks or of large-sized cracks; causes and manifestations of those fractures are discussed, and the loss of elastic or plastic strength on the passage through the critical state. Either type of fracture may be brought about by four causes of stress: 1, mechanical or thermal shock stresses; 2, brief static loads for some minutes or hours; 3, static loads for some months or years; 4, periodic loads. Fig. 1 presents examples in the variation of elastic and plastic conditions in a tube, and a fictitious elastic tension is shown to arise in the plastic zone (dashed line), while the forms of mechanical

X

Card 1/24

APPROVED FOR RELEASE: 08/23/2000 CIA-RDP86-00513R001548610003-3"

"APPROVED FOR RELEASE: 08/23/2000 CIA-RDP86-00513R001548610003-3

and thermal stress are intercompared in Fig. 4. Creep arises in nonuniformly heated structural elements, and cracks appear as a consequence of plastic deformation, particularly with materials having a low plasticity at room temperature. For calculating the creeping process the assumption is made on the basis of the creep theory that there is a functional relationship between the rate of creep v_i, the instantaneous stress σ_i, the temperature T, the time τ, and the plastic deformation P, namely, $v_i = v_i\left(\frac{P}{P_*}\right)^{-\alpha}$. Here, $P = \int_0^{\tau} v_i d\tau$; $v_i = f_m(\sigma_i, T)$; $P_* = f_*(\sigma_i, T)$. The thermal fatigue fracture has much in common with the mechanical one. It can be therefore determined from the known mechanical properties of a material. Whereas, however, the thermal fracture appears already after 10^3-10^4 cycles, the mechanical one takes 10^7-10^8 cycles to appear. A characteristic feature of the thermal fracture is the local deformation in zones with a particularly large temperature difference also in homogeneous fields of stress. This is also related to the appearance of high microstresses (Table 3). For sudden thermal shocks the temperature jump giving rise to a brittle fracture may

APPROVED FOR RELEASE: 08/23/2000 CIA-RDP86-00513R001548610003-3"

"APPROVED FOR RELEASE: 08/23/2000 CIA-RDP86-00513R001548610003-3

23740
S/089/61/010/006/005/011
B136/B201

Some problems of thermal strength ...

be estimated by an equation. Of importance in the practice, however, is the creep character and the durability of the material under combined mechanical and nonsteady thermal loads. Experimental results are illustrated in Fig. 9, where the curves of variation of length-versus-time (scale 400:1) are compared with the cyclic temperature curve II and the thermal and elastic deformation III. As opposed to combined stress conditions, in which the strain-stress characteristic concerned is worsened with increased temperatures, stresses in case of a purely thermal stress are of a thermal origin and lead to bulging of structural elements in the hot zones, without, however, causing their breakdown. The micromechanical properties were checked in two ways. The principle of the second is illustrated in Fig. 13, while the results of the former - for static elongations and at 1400 - 1500°C in vacuum or in a controlled atmosphere, are presented in Fig. 12. In Fig. 13, 1 denotes the sample with a cross section of 2 X 1 or 3 X 1 mm, that is placed in a groove milled out from block 2. The pressure is yielded by stamp 3 made of tungsten briquettes 4. The resulting breakdown is indicated over contact 7. There are 13 figures, 3 tables, and 39 references: 27 Soviet-bloc and 12 non-Soviet-bloc. The three most recent references to English-language publications

Card 3/9

APPROVED FOR RELEASE: 08/23/2000 CIA-RDP86-00513R001548610003-3"

"APPROVED FOR RELEASE: 08/23/2000 CIA-RDP86-00513R001548610003-3

23710
S/089/61/010/006/005/011
B136/B201

Some problems of thermal strength ...

read as follows: Fracture, New York, Wiley and Sons, 1959; E. Sternbery, I. Chakravorty, Quart. Appl. Math., 17, no. 2, 205 (1959); E. Glenny et al. J. Inst. Metals, May (1959).

SUBMITTED: September 19, 1960

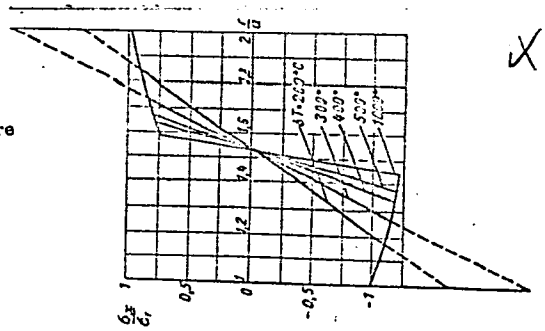

Legend to Fig. 1: Distribution of axial stresses and enlargement of the plastic zone in a thick-walled tube with various temperature jumps: r - radius of an arbitrary point; a - inner radius

Card 4/8 4

APPROVED FOR RELEASE: 08/23/2000 CIA-RDP86-00513R001548610003-3"

"APPROVED FOR RELEASE: 08/23/2000 CIA-RDP86-00513R001548610003-3

ACCESSION NR: AR3000210 S/0081/63/000/006/0662/0662

SOURCE: RZh. Khimiya, Abs. 6T153

AUTHOR: Kozopelyanskiy, N. S.; Kretov, A. Ye; Shapovalov, L. D.

TITLE: Synthesis of fluorene-9, 9-dipropionic acid base alkyd resins.

CITED SOURCE: Lakokrasochn. materialy i ikh primeneniye, no. 3, 1962, 36-39

TOPIC TAGS: Synthesis, fluorene-9, alkyd resins

TRANSLATION: An alkyd resin (AR), modified with vegetable oil fatty acids, was synthesized from fluorene-9, 9-dipropionic acid (I) and pentaerythritol. The reaction was conducted at 200, 220 and 240°. It was found that I has a high specific reactivity which is of particular interest in the synthesis of AR. At these temperatures, especially at 240°, I undergoes partial decarboxylation which has an adverse effect on the color of AR. To obviate this effect, syntheses were carried out with addi-

Card 1/2

APPROVED FOR RELEASE: 08/23/2000 CIA-RDP86-00513R001548610003-3"

"APPROVED FOR RELEASE: 08/23/2000 CIA-RDP86-00513R001548610003-3

ACCESSION NR: AR3000210

tion of water in amounts of 8-10%. Addition of water was found to be highly effective and did not affect the duration of the synthesis. An equal result is achieved by addition of xylene in amounts of 10-20%. The authors consider that in the synthesis of this AR the fatty-acid method is preferable, since it results in a high rate of reaction, good analytical indices of the resin, and makes it possible to carry out a continuous process polyesterification. The AR produced from I are readily soluble in white spirit, solvent naphtha, aromatic hydrocarbons and acetates. Varnishes consisting of 55-60% solutions of the resin in solvent naphtha, with addition of 4-5% siccative, dried at 20° tack-free within 6-8 hours and completely within 24 hours, while at 100° complete drying occurred after 2 hours. Test results are given for varnish and enamel coatings containing 38-40% zinc white. V. Latov

DATE ACQ: 16May63 ENCL: 00 SUB CODE: 00

Card 2/2

APPROVED FOR RELEASE: 08/23/2000 CIA-RDP86-00513R001548610003-3"

"APPROVED FOR RELEASE: 08/23/2000 CIA-RDP86-00513R001548610003-3

SHAPOVALOV, L.L., inzh.; KULIKOV, B.N., arkhitektor

Design of a new type of dressing plant for dressing magnetites. (MIRA 16:11)
Prom. stroi. 41 no.10:10-14 O '63.

1. Leningradskiy gosudarstvennyy institut po proyektirovaniyu promyshlennogo stroitel'stva.

APPROVED FOR RELEASE: 08/23/2000 CIA-RDP86-00513R001548610003-3"

"APPROVED FOR RELEASE: 08/23/2000 CIA-RDP86-00513R001548610003-3

SHAPOVALOV, L.T., gornyy inzh.

New scraper block. Gor. zhur. no. 11:63-64 N '60. (MIRA 13:10)

1. Giprorudmash, Krivoy Rog.
(Mine hoisting--Equipment and supplies)

APPROVED FOR RELEASE: 08/23/2000 CIA-RDP86-00513R001548610003-3"

"APPROVED FOR RELEASE: 08/23/2000 CIA-RDP86-00513R001548610003-3

SHAPOVALOV, L.T., inzh.

New reducing valve. Bezop.truda v prom. 5 no.4:24-25 Ap '61. (MIRA 14:3)

1. Institut Giprorudmash.
(Valves)

APPROVED FOR RELEASE: 08/23/2000 CIA-RDP86-00513R001548610003-3"

"APPROVED FOR RELEASE: 08/23/2000 CIA-RDP86-00513R001548610003-3

DELITSYN, S. A., kand. tekhn. nauk; SHAPOVALOV, L. T., inzh.

Improving the technology of secondary ore crushing in Krivoy Rog Basin mines. Met. i gornorud. prom. no.1:42-45 Ja-F '63. (MIRA 16:4)

1. Krivorozhskiy gornorudnyy institut (for Delitsyn).
2. Gosudarstvennyy institut po proyektirovaniyu oborudovaniya po dobyche i obogashcheniyu rud (for Shapovalov).

(Krivoy Rog Basin—Ore dressing)

APPROVED FOR RELEASE: 08/23/2000 CIA-RDP86-00513R001548610003-3"

"APPROVED FOR RELEASE: 08/23/2000 CIA-RDP86-00513R001548610003-3

SHAPOVALOV, L.T., kand. tekhn. nauk; SHVYDKIY, A.F., gornyy inzh.

Results of the introduction of reducing valves. Gor. zhur. no.5: 42-44 My '65. (MIRA 18:5)

1. Gosudarstvennyy institut po proyektirovaniyu oborudovaniya po dobyche i obogashchenlyu rud, Krivoy Rog.

APPROVED FOR RELEASE: 08/23/2000 CIA-RDP86-00513R001548610003-3"

"APPROVED FOR RELEASE: 08/23/2000 CIA-RDP86-00513R001548610003-3

LEVIUS, M.S., arkhitektor; SHAPOVALOV, L.V., inzh.

Planning the construction of a new type of bunker trestle. Prom. stroi. 40 no.8:36-38 Ag '63. (MIRA 16:8)

1. Sibirskiy gosudarstvennyy institut po proyektirovaniyu promyshlennogo stroitel'stva.
(Blast furnaces--Design and construction)

APPROVED FOR RELEASE: 08/23/2000 CIA-RDP86-00513R001548610003-3"

"APPROVED FOR RELEASE: 08/23/2000 CIA-RDP86-00513R001548610003-3

SHAPOVALOV, L.T., kand.tekhn.nauk; ZEMSKOV, I.I., tekhnik; SIN[illegible]HUK, B.M., tekhnik

The BPR pneumatic waste-rock breaker. Gor.zhur. no.1:60-62 Ja '65. (MIRA 18:3)

1. Gosudarstvennyy institut po proyektirovaniyu oborudovaniya po dobyche i obogashcheniyu rud, Krivoy Rog.

APPROVED FOR RELEASE: 08/23/2000 CIA-RDP86-00513R001548610003-3"

"APPROVED FOR RELEASE: 08/23/2000 CIA-RDP86-00513R001548610003-3

Operation of a blast furnace on an oxygen enriched blast. M. A. Shapovalov. *Domes* 1934, No. 10, 7-11.

For a blast furnace gas to be suitable for NH_3 synthesis, the ratio $(CO + H_2):N_2$ must be 3.2 instead of the ordinary 0.6. Attempts were made to produce a gas of this compn. by use of a blast enriched in O. The furnace was 12.9 m. high, diam. of hearth 1.5 m., vol. 240 cu. m. The hearth and the tuyère breast were lined with magnesia brick. Cold blast was used. The charge consisted of Fe ore and air-dried peat in one series of expts. and of Fe-Mn ore and coke in another series. Difficulties, such as formation of accretions in the furnace and burning of the water cooling system in the lining, were encountered. The resulting metal was too high in Si and S and the slag was too rich in Fe oxides. It is hoped that more definite results will be obtained by working with a larger furnace.

S. L. Madorsky

APPROVED FOR RELEASE: 08/23/2000 CIA-RDP86-00513R001548610003-3"

"APPROVED FOR RELEASE: 08/23/2000 CIA-RDP86-00513R001548610003-3

Ca

9

An investigation of the performance of "Zaporozhstal" blast furnaces. M. Pozin and M. Shapovalov. *Domen* 1935, No. 6, 12-25.—The 2 blast furnaces, built on soft ground, began to settle irregularly and soon acquired an inclined position. This caused irregularities in their operation, such as one-sided descent of burden, flow of molten slag into the tuyères situated on the side opposite from the incline and difficulties with the cooling system, due to local overheating. It is suggested that these irregularities can be corrected to a large extent by using coke of higher grade and a more acid slag (47-49 CaO) and by checking up closely further settling and inclining of the furnaces. S. L. Madorsky

ASM SLA METALLURGICAL LITERATURE CLASSIFICATION

APPROVED FOR RELEASE: 08/23/2000 CIA-RDP86-00513R001548610003-3"

"APPROVED FOR RELEASE: 08/23/2000 CIA-RDP86-00513R001548610003-3

The technological-economic basis for the use of oxygen-enriched air in blast furnaces. M. A. Shapovalov. *Teoriya i Praktika Metallurgii* 1938, No. 7-8, 3-6; *Khim. Referat. Zhur.* 2, No. 5, 76(1939).—In the production of ferrosilicon, blowing with O yields high-alumina, low-silica slags which are suitable for the production of Al_2O_3 and of cements of high quality. The blast-furnace gas produced can be used for the manuf. of NH_3. A layout is described. In order to increase the Al_2O_3 content in the slag bauxite is added to the mixt. This process for each ton of ferrosilicon and slag used with a blast contg. 60% of O produces a blast-furnace gas contg. CO 73.4, CO_2 5.45 and N 20.70%. A similar process with a blast contg. 45% of O produces CO 62.3, CO_2 5.7 and N 31.6%. It is recommended to use a 40% O blast for ordinary grades of cast iron and ferromanganese. The O blast in smelting ordinary grades of cast iron increases considerably the productivity of the furnace without increasing the blast, and it lowers the required height of the blast furnace.

W. R. Henn

ASM-SLA METALLURGICAL LITERATURE CLASSIFICATION

APPROVED FOR RELEASE: 08/23/2000 CIA-RDP86-00513R001548610003-3"

"APPROVED FOR RELEASE: 08/23/2000 CIA-RDP86-00513R001548610003-3

Blowing coke gases into the blast furnace. M. A. Shapovalov. *Teoriya Prakt. Met.* 1938, No. 11, 21-6. *Khim. Referat. Zhur.* 2 No. 4, 94(1939).—A blast-furnace gas suitable for the *synthesis of NH_3* (with a simultaneous production of cast iron in the blast furnace) can be obtained by blowing coke gas into the furnace together with O. This permits obtaining a ratio (CO + H):N = 3:2 in the blast-furnace gas with a content of O in the blown air of less than 60%. The use of hot blowing replaces in the heat balance of the furnace a part of the expensive coke heat. More than 2 cu. m. of coke gas can be blown in for each kg. of C. The O content in the blast should be 43-5%. By preliminary sepn. of H from the coke gas (by cooling) and adding it to the blast-furnace gas, the amt of the blast gas will be reduced to approx. one-half. A no. of curves and tech. data are given. W. R. Henn

APPROVED FOR RELEASE: 08/23/2000 CIA-RDP86-00513R001548610003-3"