"APPROVED FOR RELEASE: 08/23/2000 CIA-RDP86-00513R001548920002-0

SOV/112-57-6-12889

Dynamic Accuracy of a Friction-Type Integrator

specific disk-type friction clutches of various structural parameters; curves are given of the slipping of ball-type and mushroom-type friction clutches as a function of the pressure exerted. In conclusion, a numerical example is presented of a check problem with a frictional "smoothing" mechanism under dynamic load conditions.

L. I. T.

Card 2/2

APPROVED FOR RELEASE: 08/23/2000 CIA-RDP86-00513R001548920002-0"

"APPROVED FOR RELEASE: 08/23/2000 CIA-RDP86-00513R001548920002-0

SHCHETNIKOV, V. V.

Shchetnikov, V. V.

"Dynamic Precision of Friction Mechanisms." Cand Tech Sci, Moscow Order of the Labor Red Banner Higher Technical School imeni Bauman, 25 Jan 54. (Vechernyaya Moskva, 14 Jan 54)

SO: SUM 168, 22 July 1954

APPROVED FOR RELEASE: 08/23/2000 CIA-RDP86-00513R001548920002-0"

"APPROVED FOR RELEASE: 08/23/2000 CIA-RDP86-00513R001548920002-0

BELYAYEVA, G.I.; SHCHETNIKOV, Ye.N.; ILYUSHCHENKO, N.G.

Possibility of obtaining heat-resistant coatings on molybdenum by the use of the electrolytic method. Trudy Inst. elektrokhim. UFAN SSSR no.3:101-110 '62. (MIRA 16:6)

(Heat resistant alloys) (Molybdenum)
(Electrolysis)

APPROVED FOR RELEASE: 08/23/2000 CIA-RDP86-00513R001548920002-0"

"APPROVED FOR RELEASE: 08/23/2000 CIA-RDP86-00513R001548920002-0

L 44723-65 EWG(j)/EWT(m)/EPF(c)/EPF(n)-2/EWG(m)/EPR/EWP(t)/EWP(b) Pr-4/ Ps-4/Pu-4 IJP(c) JD/JG

ACCESSION NR: AP5010398 UR/0226/65/000/004/0001/0008

AUTHOR: Shchetnikov, Ye. N.; Shveykin, G. P.

TITLE: Effect of gaseous-phase pressure and of the addition of high-melting metals on the nature of the intermediate products of the reduction of vanadium trioxide with carbon

SOURCE: Poroshkovaya metallurgiya, no. 4, 1965, 1-8

TOPIC TAGS: vanadium trioxide, oxycarbide phase, gaseous phase pressure, phase transition, phase homogeneity, reaction kinetics

ABSTRACT: A characteristic feature of the reduction of the oxides of high-melting metals is the formation of complex intermediate products (carbides, lower oxides, oxycarbides) with broad regions of homogeneity. Their composition determines both the mechanism and the kinetics of the reactions of this reduction. In the literature on this subject, particularly as regards V-O, V-C and V-C-O systems there still exists considerable disagreement, however, on the phase components and phase homogeneity of these systems. To clarify the picture, the authors describe the results of an experimental investigation of the kinetics of the process of reduction of

Card 1/2

APPROVED FOR RELEASE: 08/23/2000 CIA-RDP86-00513R001548920002-0"

"APPROVED FOR RELEASE: 08/23/2000 CIA-RDP86-00513R001548920002-0

L 44723-65

ACCESSION NR: AP5010398

6

V_2O_3 with carbon as a function of the pressure of carbon monoxide and argon, temperature, size of V_2O_3 particles, molding pressure, and addition of high-melting metals. The investigation was performed by sintering in a specially designed 100-kw laboratory furnace which permitted heating of the investigated charge both in a vacuum and in an inert gas atmosphere. The composition of the intermediate and final products was assayed by the gravimetric and volumetric methods of chemical analysis as well as by X-ray phase analysis. The effect of the gaseous phase (CO or Arg) was investigated by determining the percentage of reduction as a function of increase in temperature. It was found that the decrease in the pressure of carbon monoxide in the system contributes to the transition of the δ'-oxycarbide phase to the γ'-phase; this is also assisted by the addition of high-melting metals (Nb, Ta, Cr, Mo, W), which form a solid solution against the background of the γ'-phase. Orig. art. has: 6 figures, 3 tables.

ASSOCIATION: Institut khimii, Ural'skiy filial (Institute of Chemistry, Ural'skiy filial AN SSSR)

SUBMITTED: 13Feb64 ENCL: 00 SUB CODE: MM, IC

NO REF SOV: 013 OTHER: 002

Card 2/2 MOB

APPROVED FOR RELEASE: 08/23/2000 CIA-RDP86-00513R001548920002-0"

"APPROVED FOR RELEASE: 08/23/2000 CIA-RDP86-00513R001548920002-0

ACC NR: AT6036295 SOURCE CODE: UR/2768/66/000/009/0043/0050

AUTHOR: Shchetnikov, Ye. N.; Shveykin, G. P.; Gel'd, P. V.

ORG: none

TITLE: Reaction of vanadium with carbon monoxide

SOURCE: AN SSSR. Ural'skiy filial. Institut khimii. Trudy, no. 9, 1966. Fiziko-khimicheskiye issledovaniya soyedineniy redkikh tugoplavkikh elementov (Ti, V, Nb, Ta), ch. 1: Tverdofaznyye protsessy (Physicochemical analysis of compounds of rare refractory elements (Ti, V, Nb, Ta), Pt. 1: Solid-phase processes), 43-50

TOPIC TAGS: vanadium, carbon monoxide, chemical kinetics, activation energy

ABSTRACT: The kinetics of the reaction of powdered and massive vanadium with carbon monoxide were studied at various pressures and temperatures, for which the reaction rates were determined. The activation energy for both forms of vanadium was found to be 35.3 kcal/mole at 1400-1500°C. X-ray and metallographic analyses indicate that a cubic oxycarbide δ' phase (VC_xO_y) is formed on the surface of the samples, and an oxycarbide γ' phase ($V_2C_xO_y$) is located under it. This shows that the diffusion front of carbon moves faster than that of oxygen, since, if the opposite were true, an oxide phase instead of a carbide phase would be located at the metal boundary. The δ' phase accumulates on the surface of the sample in the form of a loose layer which sometimes peels off on cooling, whereas the layer of the γ' phase remains

APPROVED FOR RELEASE: 08/23/2000 CIA-RDP86-00513R001548920002-0"

"APPROVED FOR RELEASE: 08/23/2000 CIA-RDP86-00513R001548920002-0

ACC NR: AT6036295

approximately stationary. It is concluded that the diffusion of carbon and oxygen and the reverse diffusion of vanadium through the γ' phase determine the kinetics of oxidation of vanadium by carbon monoxide. Orig. art. has: 6 figures, 2 tables and 1 formula.

SUB CODE: 07/ SUBM DATE: none/ ORIG REF: 009/ OTH REF: 004

Card 2/2

APPROVED FOR RELEASE: 08/23/2000 CIA-RDP86-00513R001548920002-0"

"APPROVED FOR RELEASE: 08/23/2000 CIA-RDP86-00513R001548920002-0

L 23949-65 EPF(n)-2/EWT(m)/EWP(b)/EWP(t) Pu-4 IJP(c) JD/JG
ACCESSION NR: AP5003124 S/0080/65/038/001/0197/0201

AUTHOR: Shchetnikov, Ye. N.; Belyayeva, G. I.; Ilyushchenko, N. G.; Shchetnikova, I. L.

TITLE: Electrolytic siliconizing of molybdenum in fused salt electrolyte

SOURCE: Zhurnal prikladnoy khimii, v. 38, no. 1, 1965, 197-201

TOPIC TAGS: molybdenum, molybdenum siliconizing, electrolytic siliconizing, fused salt electrolyte

ABSTRACT: A study of electrolytic deposition of silicon on molybdenum for protecting the latter against oxidation has been made. A dense and smooth 50-μ thick $MoSi_2$ coating was obtained from a fused-salt electrolyte consisting of 33% Na_2SiO_3 and 67% NaF, at 1100C and 0.3 amp/cm^2 current density, in 4—6 hr. The coating protects molybdenum from oxidation at 1600C for 7—10 hr, during which time the thickness of the coating increases almost 1.5 times and the composition changes to Mo_3S. Orig. art. has: 7 figures. [ND]

Card 1/2

APPROVED FOR RELEASE: 08/23/2000 CIA-RDP86-00513R001548920002-0"

"APPROVED FOR RELEASE: 08/23/2000 CIA-RDP86-00513R001548920002-0

L 23949-65

ACCESSION NR: AP5003124

ASSOCIATION: none

SUBMITTED: 19Jan63 ENCL: 00 SUB CODE: MM

NO REF SOV: 006 OTHER: 005 ATD PRESS: 3177

Card 2/2

APPROVED FOR RELEASE: 08/23/2000 CIA-RDP86-00513R001548920002-0"

"APPROVED FOR RELEASE: 08/23/2000 CIA-RDP86-00513R001548920002-0

SHCHESTNIKOV, V.A.; SHUMKOV, G.F.

Effect of the gaseous phase pressure and additions of high-melting metals on the character of intermedite products of vanadium trioxide reduction by carbon. Porosh. met. 5 no.4:1-8 '65.
(MIRA 18:5)

APPROVED FOR RELEASE: 08/23/2000 CIA-RDP86-00513R001548920002-0"

"APPROVED FOR RELEASE: 08/23/2000 CIA-RDP86-00513R001548920002-0

SHCHERBAKOV, Ye.S. and A.I. SMIRNOV.

Eksperimental'noe issledovanie turboreaktivnogo dvigatelia BMW-003. (Tekhnika vozdushnogo flota, 1946, no. 10, p. 13-26, diagrs.)

Title tr.: Experimental investigation of BMW-003 turbojet engine.

TL504.T4 1946

SO: Aeronautical Sciences and Aviation in the Soviet Union, Library of Congress, 1955.

APPROVED FOR RELEASE: 08/23/2000 CIA-RDP86-00513R001548920002-0"

"APPROVED FOR RELEASE: 08/23/2000 CIA-RDP86-00513R001548920002-0

BONDARYUK, Mikhail Makarovich; IL'YASHENKO, Sergey Mikhaylovich; SHCHETINKOV, Ye.S., doktor tekhn.nauk prof., retsenzent; MAKAROV, B.V., inzh., red.; PETROVA, I.A., izdatel'skiy red.; ROZHIN, V.P., tekhn.red.

[Ram-jet engines] Priamotochnye vozdushno-reaktivnye dvigateli. Moskva, Gos. izd-vo obor. promyshl. 1958. 391 p. (MIRA 11:4)
(Jet planes--Engines)

APPROVED FOR RELEASE: 08/23/2000 CIA-RDP86-00513R001548920002-0"

"APPROVED FOR RELEASE: 08/23/2000 CIA-RDP86-00513R001548920002-0

SHCHETNIKOVA, I.L.

USSR/Solid State Physics - Structure of Alloys and Other Systems E-4

Abs Jour : Ref Zhur - Fizika, No 1, 1958, 958

Author : Toropov, N.A., Shchetnikova, I.L.

Inst : -

Title : Model Systems Na_2BeF_4-Li_2BeF_4 and Ca_2SiO_4-Mg_2SiO_4. 1. On the Polymorphism of Na_2BeF_4 and Li_2BeF_4.

Orig Pub : Zh. neorgan. khimii, 1957, 2, No 6, 1392-1400

Abstract : No abstract.

Card 1/1

APPROVED FOR RELEASE: 08/23/2000 CIA-RDP86-00513R001548920002-0"

"APPROVED FOR RELEASE: 08/23/2000 CIA-RDP86-00513R001548920002-0

S[illegible], I.I., Gen Chem Sci --(Abst) "Thermochemical study of the [illegible] Mg_2BeF_4--Li_2BeF_4 system and its analogy to the Ca_2SiO_4--Mg_2SiO_4 system." Len, 1951. 16 pp incl cover, with ill (Acad Sci USSR. Inst of the Chemistry of Silicates), 200 copies (KL,44-51,120)

APPROVED FOR RELEASE: 08/23/2000 CIA-RDP86-00513R001548920002-0"

"APPROVED FOR RELEASE: 08/23/2000 CIA-RDP86-00513R001548920002-0

STRELOV, K.K.; MAMYKIN, P.S.; Prinimali uchastiye: BAS'YAS, I.P.; BICHURINA, A.A.; BRON, V.A.; VECHER, N.A.; VOROB'YEVA, K.V.; D'YACHKOVA, Z.S.; D'YACHKOV, P.N.; DVORKIND, M.M.; IGNATOVA, T.S.; KAYBICHEVA, M.N.; KELAREV, N.V.; KOSOLAPOV, Ye.F.; MAR'YEVICH, N.I.; MIKHAYLOV, Yu.F.; SEMKINA, N.V.; STARTSEV, D.A.; SYREYSHCHIKOV, Yu.Ye.; TARNOVSKIY, G.I.; FLYAGIN, V.G.; FREYDENBERG, A.S.; KHOROSHAVIN, L.B.; CHUBUKOV, M.F.; SHVARTSMAN, I.Sh.; SHCHETNIKOVA, I.L.

Institutes and enterprises. Ogneupory 27 no.11:499-501 '62. (MIRA 15:11)

1. Vostochnyy institut ogneuporov (for Strelov). 2. Ural'skiy politekhnicheskiy institut im. S.M. Kirova (for Mamykin).
(Refractory materials--Research)

APPROVED FOR RELEASE: 08/23/2000 CIA-RDP86-00513R001548920002-0"

"APPROVED FOR RELEASE: 08/23/2000 CIA-RDP86-00513R001548920002-0

L 23949-65 EPF(n)-2/EWT(m)/EWP(b)/EWP(t) Pu-4 IJP(c) JD/JG
ACCESSION NR: AP5003124 S/0080/65/038/001/0197/0201

AUTHOR: Shchetnikov, Ye. N.; Belyayeva, G. I.; Ilyushchenko, N. G.; Shchetnikova, I. L.

TITLE: Electrolytic siliconizing of molybdenum in fused salt electrolyte

SOURCE: Zhurnal prikladnoy khimii, v. 38, no. 1, 1965, 197-201

TOPIC TAGS: molybdenum, molybdenum siliconizing, electrolytic siliconizing, fused salt electrolyte

ABSTRACT: A study of electrolytic deposition of silicon on molybdenum for protecting the latter against oxidation has been made. A dense and smooth 50-μ thick $MoSi_2$ coating was obtained from a fused-salt electrolyte consisting of 33% Na_2SiO_3 and 67% NaF, at 1100C and 0.3 amp/cm^2 current density, in 4—6 hr. The coating protects molybdenum from oxidation at 1600C for 7—10 hr, during which time the thickness of the coating increases almost 1.5 times and the composition changes to Mo_3S. Orig. art. has: 7 figures. [ND]

Card 1/2

APPROVED FOR RELEASE: 08/23/2000 CIA-RDP86-00513R001548920002-0"

"APPROVED FOR RELEASE: 08/23/2000 CIA-RDP86-00513R001548920002-0

L 23949-65

ACCESSION NR: AP5003124

ASSOCIATION: none

SUBMITTED: 19Jan63 ENCL: 00 SUB CODE: MM

NO REF SOV: 006 OTHER: 005 ATD PRESS: 3177

Card 2/2

APPROVED FOR RELEASE: 08/23/2000 CIA-RDP86-00513R001548920002-0"

"APPROVED FOR RELEASE: 08/23/2000 CIA-RDP86-00513R001548920002-0

L 38920-66 EWT(m)/EWP(j)/T WW/JW/RM

ACC NR: AP6010742 SOURCE CODE: UR/0076/66/040/003/0516/0519

59
56
B

AUTHOR: Strelov, K. K.; Shchetnikova, I. L.

ORG: none

TITLE: Modeling of surface energy

SOURCE: Zhurnal fizicheskoy khimii, v. 40, no. 3, 1966, 516-519

TOPIC TAGS: thermodynamic property, surface tension, entropy

ABSTRACT: An investigation is made of the ability of the ternary fluoroberyllate system $NaF-LiF-BeF_2$ to model the silicate system $CaO-MgO-SiO_2$ in its surface energy. Simulation of the surface energy, as a thermodynamic parameter, should be accompanied by the simulation of other thermodynamic properties which determine the surface energy. Tables of the thermodynamic properties presented show that the thermodynamic parameters are satisfactorily modeled. The surface tension of oxides and their fluoride analogs at the melting temperature and the contact wetting angles are also presented in tabular form. A formula is presented for determining the surface energy of a solid body:

UDC: 532.61

Card 1/2

APPROVED FOR RELEASE: 08/23/2000 CIA-RDP86-00513R001548920002-0"

"APPROVED FOR RELEASE: 08/23/2000 CIA-RDP86-00513R001548920002-0

L 38920-66

ACC NR: AP6010742

B

$$\sigma_1^{T_1} \approx \sigma_2^{T_1}\left(2 - \frac{S_1}{S_2}\right),$$

where S_1 and S_2 are the entropies of the solid and liquid states at temperatures T_1 and T_2. The material presented makes it possible to determine the surface energy of oxides using the values of surface energies of their fluoride models. G. P. Ishigilov and A. A. Perminov took part in the determination of surface tension. Orig. art. has: 4 tables and 1 formula.

SUB CODE: 20/ SUBM DATE: 04Oct64/ ORIG REF: 009/ OTH REF: 007

Card 2/2

APPROVED FOR RELEASE: 08/23/2000 CIA-RDP86-00513R001548920002-0"

"APPROVED FOR RELEASE: 08/23/2000 CIA-RDP86-00513R001548920002-0

SHCHETNOV, M., zasluzhennyy zootekhnik USSR.

Mobile artificial insemination point. Nauka i pered. op. v sel'khoz. 18 no.2:22 F '58. (MIRA 11:3)

(Artificial insemination)

APPROVED FOR RELEASE: 08/23/2000 CIA-RDP86-00513R001548920002-0"

"APPROVED FOR RELEASE: 08/23/2000 CIA-RDP86-00513R001548920002-0

PA 30T75

SHCHETOIEV, YE. YA.

USSR/Radio Feb 1947
Loran - Navigation
Navigation

"Radio Technology Serving Future Navigation," Ye. Ya. Shchetolev, Dr of Technical Sciences, 6 pp

"Nauka i Zhizn'" No 2

Description and operation of "Loran" and other new radio navigational aids.

30T75

APPROVED FOR RELEASE: 08/23/2000 CIA-RDP86-00513R001548920002-0"

"APPROVED FOR RELEASE: 08/23/2000 CIA-RDP86-00513R001548920002-0

BABICHEV, F.S.; SHCHETSINSKAYA, E.

Mono,tri-, and pentamethinecyanines from 2,3-polymethylenebenzothiazolium salts. Zhur. ob. khim. 34 no.7:2441-2449 Jl '64 (MIRA 17:8)

1. Kiyevskiy gosudarstvennyy universitet imeni T.G.Shevchenko.

APPROVED FOR RELEASE: 08/23/2000 CIA-RDP86-00513R001548920002-0"

"APPROVED FOR RELEASE: 08/23/2000 CIA-RDP86-00513R001548920002-0

L 13959-66 EWT(m)/EWP(w)/EWP(v)/T-2/EWP(k)/ETC(m)-6 IJP(c) WW/EM/GS
ACC NR: AT6001705 (N) SOURCE CODE: UR/0000/65/000/000/0232/0234

AUTHOR: Sachetsinskiy, Yu. A.

ORG: none

TITLE: Experiences during balancing of turbine rotors at the Kaluga turbine factory

SOURCE: Uravnoveshivaniye mashin i priborov (Balancing of machinery and instruments). Moscow, Izd-vo "Mashinostroyeniye", 1965, 232-234

TOPIC TAGS: turbine rotor, rotor balancing, ~~turbomachinery~~, turbine blade

ABSTRACT: Some practical experiences gained at the Kaluga Turbine Factory (Kaluzhskiy turbinnyy zavod) during balancing of turbine rotors are discussed briefly and qualitatively. Since the balancing machinery for flexible shafts is not yet available, the factory balances the rotors prior to mounting. Use of conical centering heads on the rotors results in very low accuracy because the rotors have no shoulders. To eliminate this difficulty, the rotors are press fitted on a temporary hub (see Fig. 1). To decrease initial unbalance, the turbine blades are weighed, and equal weights are placed at diametrically opposed locations. It has been found that preliminary static balancing is unsatisfactory for some impellers (up to 8000 newtons). In these cases, preliminary dynamic balancing is performed prior to assembly of the outer disk, (impeller blades are machined to get initial balance). After assembly, a final dynamic balancing is performed. In the balancing of welded rotors with hollow internal

Card 1/2

APPROVED FOR RELEASE: 08/23/2000 CIA-RDP86-00513R001548920002-0"

"APPROVED FOR RELEASE: 08/23/2000 CIA-RDP86-00513R001548920002-0

L 13959-66

ACC NR: AT6001705

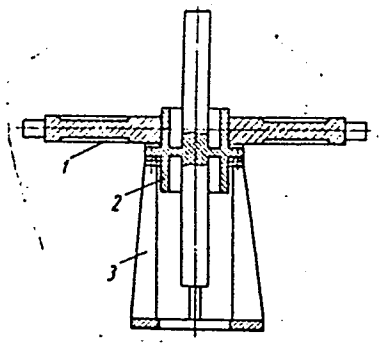

Fig. 1. Balancing fixture: 1 - disk; 2 - insert; 3 - stand.

chambers, it has been found useful to make sure that each section is concentric with respect to an outer control surface. During welding these control surfaces are used to obtain proper alignment. Orig. art. has: 3 figures.

SUB CODE: 13/ SUBM DATE: 04Sep65

Card 2/2

APPROVED FOR RELEASE: 08/23/2000 CIA-RDP86-00513R001548920002-0"

"APPROVED FOR RELEASE: 08/23/2000 CIA-RDP86-00513R001548920002-0

Shchetsko, M.I.

Investigation of straight-distillation gasoline from Surakhan petroleum. G. D. Gal'pern, M. V. Shishkina, and M. I. Shchetsko. *Trudy Vsesoyuz. Soveshchaniya po Khim. i Pererabotke Nefti, Baku*, Sept., *1951, Akad. Nauk Azerbaidzhan. S.S.R.* 1953, 123-35; *Referat. Zhur., Khim.* 1954, No. 27035.—Aromatic hydrocarbons were first removed by sulfonation to give a neg. formolite reaction (Nastyukov method, *C.A.* 20, 498). Fine fractionation of the gasoline was carried out in a 2-m. column provided with a Levin head, and d, *n*. (at various wave lengths), and the spectra of combined scattering were detd. on the fractions. Part of the fractions were dehydrogenated and freed from aromatics, and the concn. of naphthenes and paraffins was detd. refractometrically. The ratio of dimethylcyclohexanes was checked by dehydrogenation of the corresponding fractions by the Zelinskii and Kazanskii method (*C.A.* 26, 77) followed by spectrographic analysis of the catalyzates. Analytical dehydrogenation was carried out so as to suppress hydrogenolysis of cyclopentanes by using Pt-coated C (with admixt. of Fe) prepd. without preliminary pptn. of the Pt with HCHO. The content of aromatic hydrocarbons in the catalyzates was detd. by specific dispersion. The results of this investigation showed the ratio of naphthenic to paraffinic hydrocarbons to be: C_5 0.2, C_6 1.7, C_7 4.8, C_8 3.5, and C_9 2.0. The main components of the gasoline were found to be methylcyclohexane, *trans*-dimethylcyclohexane, cyclohexane, methylcyclopentane, and *trans*-dimethylcyclopentanes. A considerable quantity of hydrindene was believed to be present.

M. Hosch

gm

APPROVED FOR RELEASE: 08/23/2000 CIA-RDP86-00513R001548920002-0"

"APPROVED FOR RELEASE: 08/23/2000 CIA-RDP86-00513R001548920002-0

GAL'PERN, G.D.; SHISHKINA, M.V.; SHCHETSKO, M.I.

Light naphthene and paraffin hydrocarbons in ordinary Surakhany petroleum. Trudy inst. nefti. 10:59-73 '57. (MIRA 11:4)
(Surakhany region--Petroleum)
(Paraffins) (Naphthene)

APPROVED FOR RELEASE: 08/23/2000 CIA-RDP86-00513R001548920002-0"

"APPROVED FOR RELEASE: 08/23/2000 CIA-RDP86-00513R001548920002-0

65-58-4-10/12

AUTHORS: Kusakov, M. M., Landau, M. A., Lubman, A. M., and Shchetko, M. I.

TITLE: Calcium Hydride Method for Determining the Content of the Water in Fuel When Taking into Account the Kinetics of Evolution of Hydrogen (Gidridkal'tsiyevyy metod opredeleniya soderzhaniya vody v toplive s uchetom kinetiki vydeleniya vodoroda)

PERIODICAL: Khimiya i Tekhnologiya Topliv i Masel, 1959, Nr 4, pp 55 - 61 (USSR)

ABSTRACT: The solubility of water in hydrocarbon liquids, and, partly in fuels and oils depends in a varying degree on their chemical composition and on the temperature (Refs.1 and 2); the liquids are very hygroscopic. The calcium hydride method is one of the most important amongst the physical and chemical methods of determining the water content in hydrocarbon liquids (Refs. 3 - 8). It is based on measuring the volume (V method) or the pressure (P method of hydrogen, separated during the reaction of calcium hydride and water. Formulae are derived for calculating the water content according to both methods (formulae 2 and 7). When excess calcium hydride is reacted with water a second order reaction takes place. A graphical method for the determination of the volume or pressure of hydrogen is also given.

Card 1/2

APPROVED FOR RELEASE: 08/23/2000 CIA-RDP86-00513R001548920002-0"

"APPROVED FOR RELEASE: 08/23/2000 CIA-RDP86-00513R001548920002-0

65-58-4-10/12

Calcium Hydride Method for Determining the Content of the Water in Fuel When Taking into Account the Kinetics of Evolution of Hydrogen

A second variation of the P method makes it possible to determine the content of water in hydrogen liquids with an accuracy of about 1%. This method is recommended for Research Institutes for determining the waters dispersed in the form of very fine drops. When calculating the evolution of hydrogen according to the V method it is possible to shorten the time of the experiment, and to increase the accuracy of measurements to about 3% - 5%. Formulae for calculating the reaction kinetics of the interaction of calcium hydride in water are given (formulae 8 - 10). Experiments were carried out with synthetic mixtures of the fuel T-1 and petrol B-70 with water in reaction pumps (Fig.1). Table 1 and 2 shows results of experiments according to the V method and P method respectively. There are 4 Figures, 2 Tables, and 10 References: 6 Russian, 2 English and 2 German.

ASSOCIATION: Petroleum Institute AS USSR (Institut nefti AN SSSR)

Card 2/2 1. Water-Determination 2. Calcium hydride-Applications
3. Fuels-Impurities

APPROVED FOR RELEASE: 08/23/2000 CIA-RDP86-00513R001548920002-0"

"APPROVED FOR RELEASE: 08/23/2000 CIA-RDP86-00513R001548920002-0

SOV/65-58-8-14/14

AUTHORS: Lysenko, T. D.; Malanicheva, [illegible] G; Ogareva, N. V; Zarary[illegible], M. Ye; Tugolukov, V. M. and Shchetsko, M. I.

TITLE: A More Accurate Definition of the Volume Calcium Hydride Method for Determining the Water Content in Fuels. (Utochneniye ob"yemnogo gidridkal'tsiyevogo metoda opredeleniya soderzhaniya vody v toplivakh).

PERIODICAL: Khimiya i Tekhnologiya Topliv i Masel, 1958, Nr.8. pp. 71 - 72. (USSR).

ABSTRACT: Experiments were carried out to compare different variations in the V-method and P-method for measuring the pressure of hydrogen separated during the interaction of calcium hydride and water. The following types of apparatus were used: V-method: apparatus by V. M. Tugolukov and the one designed by VNII NP and the Institute im. P. I. Baranov; P-method: apparatus by T. D. Lysenko and the device designed by the Institute of Petroleum, AS USSR (Institut Nefti AN SSSR). The time required for testing various synthetic mixtures as listed in Table 1 varied between 3 - 4 hours. Various modifications of the VNII NP device and the apparatus designed by the Institute im. P. I. Baranov are suggested (Fig.1). The accuracy of the new apparatus for the V-method was tested and

Card 1/2

APPROVED FOR RELEASE: 08/23/2000 CIA-RDP86-00513R001548920002-0"

"APPROVED FOR RELEASE: 08/23/2000 CIA-RDP86-00513R001548920002-0

SOV/65-58-3-14/14

A More Accurate Definition of the Volume Calcium Hydride Method for Determining the Water Content in Fuels.

results of parallel tests on the older and modified apparatus given in Table 2. The new method was accepted by the USSR Standard Committee (Komitet standartov mer i izmeritel'nykh priborov pri Sovete ministrov soyuza SSR) as the Standard GOST 8287-57. There is 1 Figure, and 3 Tables.

1. Fuels--Moisture content 2. Calcium hydride--Chemical reactions
3. Water--Chemical reactions 4. Fuels--Testing equipment

USSR

Card 2/2

APPROVED FOR RELEASE: 08/23/2000 CIA-RDP86-00513R001548920002-0"

"APPROVED FOR RELEASE: 08/23/2000 CIA-RDP86-00513R001548920002-0

KUSAKOV, M.M.; LUBMAN, N.M.; SHCHETSKO, M.I.

Investigating the state and distribution of water in fuel. Khim.i tekh.topl.i masel 5 no.8:63-66 Ag '60. (MIRA 13:8)

1. Institut neftekhimicheskogo sinteza AN SSSR.
(Liquid fuels) (Water)

APPROVED FOR RELEASE: 08/23/2000 CIA-RDP86-00513R001548920002-0"

"APPROVED FOR RELEASE: 08/23/2000 CIA-RDP86-00513R001548920002-0

BORISOV, V.I.; LEVIT, Z.Yu., inzh.; KALININ, V.Z., inzh.; BROVKIN, M.G., inzh.; AGAL'TSOV, N.V., inzh.; ZHIGACHEVA, T.F., inzh.; LOBANOV, V.S., inzh.; ALIMOV, M.F., inzh.; VIKSMAN, I.M., inzh.; LAZAREV, V.Ya., inzh.; ZALEVSKAYA, L.V., tekhnik; SHCHETVINA, R.F., tekhnik; SOKOLOVSKIY, I.A., red.; SHALAGINOV, A.A., vedushchiy red.

[Special and basic equipment of mechanical assembly shops in instrument plants] Nestandartnoe oborudovanie i orgosnastka mekhanicheskikh sborochnykh tsekhov priborostroitel'nykh zavodov. Moskva, Otdel nauchno-tekhn. informatsii, 1959. 158 p. (MIRA 15:4)

(Instrument industry—Equipment and supplies)

APPROVED FOR RELEASE: 08/23/2000 CIA-RDP86-00513R001548920002-0"

"APPROVED FOR RELEASE: 08/23/2000 CIA-RDP86-00513R001548920002-0

KOZLOV, V., mayor; SHCHEULIN, N., kapitan; KULAKOV, P., starshiy leytenant

The commanding officer and the work of a Communist Youth League organization; from experience. Voen. vest. 38 no.7:25-30 Jl '58. (MIRA 11:6)

(Military education) (Communist Youth League)

APPROVED FOR RELEASE: 08/23/2000 CIA-RDP86-00513R001548920002-0"

"APPROVED FOR RELEASE: 08/23/2000 CIA-RDP86-00513R001548920002-0

ANTSUS, L.I.; PETROV, A.D.; SHCHEULINA, O.I.

Catalytic dehydrocyclopolymerization of C_4 and C_8 olefins on $ZnCl_2$ and $ZnCl_2$ + ZnS. Izv. AN SSSR. Ser. khim. no.10: 1866-1870 O '64. (MIRA 17:12)

1. Institut organicheskoy khimii im. N.D. Zelinskogo AN SSSR.

APPROVED FOR RELEASE: 08/23/2000 CIA-RDP86-00513R001548920002-0"

"APPROVED FOR RELEASE: 08/23/2000 CIA-RDP86-00513R001548920002-0

SHCHEULOV, A. P.

"Data on an Investigation of the Development of the Causative Agent of Tick-Borne Spirochetosis." Cand Med Sci, Tashkent Medical Inst, Tashkent, 1953. (RZhBiol, No 6, Nov 54)

Survey of Scientific and Technical Dissertations Defended at USSR Higher Educational Institutions (11)

SO: Sum. No. 521, 2 Jun 55

APPROVED FOR RELEASE: 08/23/2000 CIA-RDP86-00513R001548920002-0"

"APPROVED FOR RELEASE: 08/23/2000 CIA-RDP86-00513R001548920002-0

SOFIYEV, M.S., SHTYREVA, L.V.; SHCHEULOV, A.P.

Filtrable forms of spirochetes causing tick-borne relapsing fever. Med.paraz. i paraz.bol. 25 no.4:335-341 O-D '56. (MLRA 10:1)

1. Iz kafedry obshchey biologii Tashkentskogo meditsinskogo instituta imeni V.M.Molotova.
(SPIROCHAETA,
sogdiana, filtrable forms (Rus))

APPROVED FOR RELEASE: 08/23/2000 CIA-RDP86-00513R001548920002-0"

"APPROVED FOR RELEASE: 08/23/2000 CIA-RDP86-00513R001548920002-0

SHCHEULOV, A.P.

Development of the causative organism of tick-borne spirochetosis. Med.paraz. i paraz. bol. 25 no.4:342-345 O-D '56. (MLRA 10:1)

1. Iz kafedry obshchey biologii Tashkentskogo meditsinskogo instituta (dir. instituta - dotsent A.G.Gulamov, zav. kafedroy - prof. M.S.Sofiyev)

(SPIROCHAETA,
sogdiana, culture (Rus))

APPROVED FOR RELEASE: 08/23/2000 CIA-RDP86-00513R001548920002-0"

"APPROVED FOR RELEASE: 08/23/2000 CIA-RDP86-00513R001548920002-0

Tashkent Med. Inst.

APPROVED FOR RELEASE: 08/23/2000 CIA-RDP86-00513R001548920002-0"

"APPROVED FOR RELEASE: 08/23/2000 CIA-RDP86-00513R001548920002-0

[illegible]; [illegible], [illegible] S.; SMYRNEV', I. V.

On the filtrable forms of spirochetes of tick relapsing fever.

Report submitted at the 13th All-Union Congress of Hygienists, Epidemiologists and Infectionists, 1959.

APPROVED FOR RELEASE: 08/23/2000 CIA-RDP86-00513R001548920002-0"

"APPROVED FOR RELEASE: 08/23/2000 CIA-RDP86-00513R001548920002-0

SOFIYEV, M.S.; SHTYREVA, L.V.; SHCHEULOV, A.P.

Infectiousness of the blood during the incubation period of tick-borne relapsing fever. Med.zhur.Uzb. no.1:54-55 Ja '59. (MIRA 13:2)

1. Iz kafedry obshchey biologii Tashkentskogo gosudarstvennogo meditsinskogo instituta.
(RELAPSING FEVER) (BLOOD--EXAMINATION)

APPROVED FOR RELEASE: 08/23/2000 CIA-RDP86-00513R001548920002-0"

"APPROVED FOR RELEASE: 08/23/2000 CIA-RDP86-00513R001548920002-0

SHCHEULOV, A. I., ROBYAKOVA, N. I., SHAMSUTDINOVA, G. N., SOFIYEV, M.S. and SHTYREVA, I. V.

"On Toxoplasmosis of People and Animals in Tashkent."

Tenth Conference on Parasitological Problems and Diseases with Natural Reservoirs, 22-29 October 1959, Vol. II, Publishing House of Academy of Sciences, USSR, Moscow-Leningrad, 1959.

Tashkent Medical Institute and the Institute of Zoology and Parasitology of the Uzbek Academy of Sciences

APPROVED FOR RELEASE: 08/23/2000 CIA-RDP86-00513R001548920002-0"

"APPROVED FOR RELEASE: 08/23/2000 CIA-RDP86-00513R001548920002-0

SOFIYEV, M.S.; SHTYREVA, L.V.; SHCHEULOV, A.P.; FROLOVA, V.Ye.

Materials from a study of toxoplasmosis. Izv.AN Uz.SSR. Ser.med. no.5:58-62 '59. (MIRA 13:3)

1. Tashkentskiy gosudarstvennyy meditsinskiy institut.
(TOXOPLASMOSIS)

APPROVED FOR RELEASE: 08/23/2000 CIA-RDP86-00513R001548920002-0"

"APPROVED FOR RELEASE: 08/23/2000 CIA-RDP86-00513R001548920002-0

SHCHEULOV, A.P.

Structure of pathogenic spirochetes under the electron microscope. Izv.AN Uz.SSR.Ser.med. no.5:79-86 '59. (MIRA 13:3)

1. Tashkentskiy gosudarstvennyy meditsinskiy institut.
(SPIROCHETOSIS) (ELECTRON MICROSCOPY)

APPROVED FOR RELEASE: 08/23/2000 CIA-RDP86-00513R001548920002-0"

"APPROVED FOR RELEASE: 08/23/2000 CIA-RDP86-00513R001548920002-0

L 1911-66

ACCESSION NR: AP5020060 UR/0242/65/000/006/0007/0011

AUTHOR: Sofiyev, M. S. (Professor); Shtyreva, L. V.; Shcheulov, A. P.

TITLE: Toxoplasmosis in Uzbekistan

SOURCE: Meditsinskiy zhurnal Uzbekistana, no. 6, 1965, 7-11

TOPIC TAGS: bacterial disease, infective disease, disease control, tropic medicine

ABSTRACT: A study conducted from 1958 to 1962 is the first work on toxoplasmosis occurring in parts of Uzbekistan, including Tashkent. The origin, nature and signs of this disease are briefly described. Nine hundred fifty-nine individuals, mostly adults, were examined for toxoplasmosis, mainly by complement fixation, but also by hemagglutination and skin allergic reaction. Two hundred eighty-four were found positive to a varying degree; 124 of these cases were suspected on the basis of midwives' reports, 25 came from clinics for nervous diseases, 74 were opthalmic cases, and 61 came from control groups. Out of 36 children 2-5 years of age with CNS disturbances, 19 gave a positive reaction and were obviously cases

Card 1/2

APPROVED FOR RELEASE: 08/23/2000 CIA-RDP86-00513R001548920002-0"

"APPROVED FOR RELEASE: 08/23/2000 CIA-RDP86-00513R001548920002-0

L 1911-66
ACCESSION NR: AP5020060

3

of intrauterine infection. Despite the high number of spontaneous abortions, still births and genital birth defects in the women's suspect group, no direct link between the number of such embryopathies and the presence of toxoplasma antibodies could be determined. Among the children in an institution for the blind, 25% reacted positively. The presumably healthy control group contained as many positive reactions as that of suspect cases (39%). Comparison of the various detection methods revealed that complement fixation coincided 85% with hemagglutination and 68% with the skin test. Treatment with chloridin (2, 4-diamino-5-p-chlorcphenyl-6-ethylpyrimidine) and sulfodimezin is mentioned. The disease is frequent in these southern regions, and only 1/3 of the population have undergone complement fixation tests. Thus additional toxoplasmosis centers for examination and treatment are required. Orig. art. has: 2 tables

ASSOCIATION: Kafedra obshchey biologii Tashkentskogo meditsinskogo instituta (Department of General Biology of the Tashkent Medical Institute) 44,55

SUBMITTED: 11Feb65 ENCL: 00 SUB CODE: LS

NR REF SOV: 000 OTHER: 000

Card 2/2

APPROVED FOR RELEASE: 08/23/2000 CIA-RDP86-00513R001548920002-0"

"APPROVED FOR RELEASE: 08/23/2000 CIA-RDP86-00513R001548920002-0

SHCHEVCHENKO, Ye.P., inzhener.

A.S.Lavrov and his work in the field of shaped steel casting production. Vest.mash.34 no.12:91-92 D'54. (MLRA 8:2)
(Steel castings)(Lavrov, Aleksander Stepanovich, 1838-1904)

APPROVED FOR RELEASE: 08/23/2000 CIA-RDP86-00513R001548920002-0"

"APPROVED FOR RELEASE: 08/23/2000 CIA-RDP86-00513R001548920002-0

L 13600-66 EWT(m)

ACC NR: AP6001016 (A) SOURCE CODE: UR/0286/65/000/022/0101/0101

AUTHORS: Isidorov, V. V.; Akunov, V. I.; Dubinskiy, M. G.; Zavadskiy, G. V.; Insakov, Yu. T.; Lur'ye, N. Yu.; Myasin, N. I.; Nosenko, N. Ye.; Plevako, A. N.; Rybin, V. R.; Sidochenko, I. M.; Sominskiy, D. S.; Titov, P. P.; Khalov, G. G.; Snchevel', A. S.; Zavgorodniy, N. S.

ORG: none

TITLE: A reactor for combined pulverizing and burning of a material, such as cement, in a high temperature gas stream. Class 80, No. 145469

SOURCE: Byulleten' izobreteniy i tovarnykh znakov, no. 22, 1965, 101

TOPIC TAGS: cement, thermal reactor

ABSTRACT: This Author Certificate presents a reactor for combined pulverizing and burning of a material, such as cement, in a high temperature gas stream. To provide automatic regulation of the burning and calcification time for the material in the reactor, the latter is made in the shape of a flat, lenticular chamber. Nozzles of the combustion chambers are built into the peripheral circle of the lenticular chamber and at an angle to its radii. An opening in the center of the chamber bottom is used to discharge the finished burned product.

SUB CODE: 18,13/ SUBM DATE: 24May61

Card 1/1

APPROVED FOR RELEASE: 08/23/2000 CIA-RDP86-00513R001548920002-0"

"APPROVED FOR RELEASE: 08/23/2000 CIA-RDP86-00513R001548920002-0

MATSOV, Yu.K.; Prinimal uchastiye SHCHEVELEV, A.N.

New compositions of skidproof mastics for river boats. Lakokras.mat. i ikh prim. no.4:44-45 '62. (MIRA 16:11)

APPROVED FOR RELEASE: 08/23/2000 CIA-RDP86-00513R001548920002-0"

"APPROVED FOR RELEASE: 08/23/2000 CIA-RDP86-00513R001548920002-0

ROSHCHIN, V.P., red.; SHCHEVELEV, I.N., red.

[Collection of studies by the Kazakh Research Institute of Eye Diseases and the Department of Eye Diseases of the Kazakh Medical Institute, in honor of the 40th anniversary of the Great October Socialist Revolution] Sbornik trudov Kazakhskogo nauchno-issledovatel'skogo instituta glaznykh boleznei i Kafedry glaznykh boleznei KazMI, posviashchennyi 40-letiiu Velikoi Oktiabr'skoi sotsialisticheskoi revoliutsii. Alma-Ata, 1957. 315 p. (MIRA 12:5)

1. Alma-Ata. Kazakhskiy nauchno-issledovatel'skiy institut glaznykh bolezney.
(OPHTHALMOLOGY)

APPROVED FOR RELEASE: 08/23/2000 CIA-RDP86-00513R001548920002-0"

"APPROVED FOR RELEASE: 08/23/2000 CIA-RDP86-00513R001548920002-0

SOV/112-57-6-13112

Translation from: Referativnyy zhurnal. Elektrotekhnika, 1957, Nr 6, p 208 (USSR)

AUTHOR: Andriyevskiy, A. I., Sandulova, A. V., Shchevelev, M. I.

TITLE: Effect of Artificially-Introduced Impurities on the Capacitance of Cuprous-Oxide Rectifiers (O vliyanii na yemkost' mednozakisnykh vypryamiteley iskusstvenno vvedennykh primesey)

PERIODICAL: Dokl. L'vovsk. politekhn. in-ta, 1955, Vol 1, Nr 2, pp 9-12

ABSTRACT: Results of an experimental investigation of the influence of electrolytically-introduced Ag and O impurities on the capacitance of cuprous-oxide valves are reported. It is inferred that on introduction of Ag into the cuprous-oxide layer, its capacitance decreases because Ag, having diffused into the barrier layer, modifies its properties. It is assumed that O introduced into the cuprous-oxide lattice forms Ag_2O, binds free atoms of silver, and improves the barrier-layer quality by restoring its stoichiometry. Bibliography: 2 items.

E.N.U.

Card 1/1

APPROVED FOR RELEASE: 08/23/2000 CIA-RDP86-00513R001548920002-0"

"APPROVED FOR RELEASE: 08/23/2000 CIA-RDP86-00513R001548920002-0

Category : USSR/Electricity - Semiconductors G-3

Abs Jour : Ref Zhur - Fizika, No 2, 1957, No 4194

Author : Andriyevskiy, A.I., Shchevelev, M.I.
Title : On the Capacitance of the Barrier Layer of Cuprous Oxide Rectifiers.

Orig Pub : Dokl. L'vovsk. politekhn. in-ta, 1955, 1, No 2, 27-29

Abstract : An investigation was made of the dependence of the capacitance C and the resistance R of the barrier of cuprous oxide rectifiers on the oxidation temperature. For this purpose, rectifiers were prepared at different temperatures. The values of C and R of the prepared rectifiers were measured with an a-c bridge at a negative bias of 0.5 volts on the rectifier. It turned out that at oxidation temperatures of 960 to 1026°, R and C increase with the temperature. C has a maximum value at 1026° and diminishes in the interval from 1062 to 1040°. On the other hand, R begins to grow more steeply at 1026° than in the interval from 160 to 1026°. a certain amount of CuO always forms during the oxidation, and this substance is unstable at 1026°. The purest layer of Cu_2O is obtained at even higher temperatures.

It is concluded that rectifiers should be manufactured at maximum temperatures and at maximum heating speeds.

Card : 1/1

APPROVED FOR RELEASE: 08/23/2000 CIA-RDP86-00513R001548920002-0"

"APPROVED FOR RELEASE: 08/23/2000 CIA-RDP86-00513R001548920002-0

112-2-4274

TRANSLATION FROM: Referativnyy zhurnal, Elektrotekhnika, 1957, Nr 2, p. 247 (USSR)

AUTHORS: Andriyevskiy, A. I., Shchevelev, M. I.

TITLE: The Problem of the Capacity-to-Impressed-Voltage Relationship of Copper Oxide Rectifiers (K voprosu zavisimosti yemkosti mednozakisnykh vypryamiteley ot prilozhennogo napryazheniya)

PERIODICAL: Dokl. L'vovsk. politekhn. in-ta, 1955, 1, Nr 2, pp. 34-37

ABSTRACT: The capacity was measured of copper oxide rectifiers fabricated by the "oven" method from MO brand copper at oxidation temperature 1,020° and annealing temperature 550°. The capacity of the rectifier at different bias voltages was determined from given bridge measurements. The rectifier was a Schottky-Deychman single-mesh equivalent circuit. Capacity measurements at a frequency of 1,000 cps and with bias voltage applied in the reverse direction are given. The measurements were made on three rectifiers 16 mm in diameter; oxidation time, 12 min., and annealing time 0, 4 and 12 min. As the voltage in-

Card 1/2

APPROVED FOR RELEASE: 08/23/2000 CIA-RDP86-00513R001548920002-0"

"APPROVED FOR RELEASE: 08/23/2000 CIA-RDP86-00513R001548920002-0

112-2-4274

The Problem of the Capacity-to-Impressed-Voltage Relationship (Cont.)

creases in the reverse direction, the capacity drops. This drop in capacity is more marked for annealed rectifiers. Capacity measurements are given for two rectifiers of which the oxidation time was 9 min. and the annealing time 0 and 3 min. and to which bias voltage had been applied in both reverse and forward directions. Contrary to conclusions to be found in the literature on the subject, the capacity in the forward direction after some increase, decreases sharply. The capacity in the forward direction begins to drop markedly at voltages less than 0.1 v. The authors explain these changes of capacity in the forward and reverse directions as due to the combined effect of the change in the thickness of the barrier layer and changes in the barrier layer under the effect of a powerful electric field.

S.M.A.

Card 2/2

APPROVED FOR RELEASE: 08/23/2000 CIA-RDP86-00513R001548920002-0"

"APPROVED FOR RELEASE: 08/23/2000 CIA-RDP86-00513R001548920002-0

83354

S/139/60/000/004/011/033
E201/E591

9,4360

AUTHORS: Kuznetsov, V.I. and Shchevelev, M.I.

TITLE: Investigation of the Changes of Resistance of Barrier Layers in Cuprous Oxide Rectifiers Subjected to Thermal Ageing

25

PERIODICAL: Izvestiya vysshikh uchebnykh zavedeniy, Fizika, 1960, No.4, pp.117-121

TEXT: The authors report an investigation of the changes of resistance of barrier layers in cuprous oxide rectifiers and the changes of impurity-centre concentrations in such layers produced by thermal ageing. The rectifiers were prepared from electrolytic copper discs of 18 mm diameter and 0.9 mm thickness. The discs were oxidized and some of them were annealed; after annealing they were cooled by immersion in water at 20°C. The series of rectifiers studied by the authors included samples prepared by oxidation at various temperatures and for various times; the annealing conditions (temperature, duration) were also varied from sample to sample. The concentration of impurity centres, N, was found from

$$N_\lambda = \frac{8\pi}{\varepsilon e}\left[\frac{dV}{d(1/C^2)}\right]_\lambda \quad (3)$$

Card 1/3

APPROVED FOR RELEASE: 08/23/2000 CIA-RDP86-00513R001548920002-0"

"APPROVED FOR RELEASE: 08/23/2000 CIA-RDP86-00513R001548920002-0

83354

S/139/60/000/004/011/033
E201/E591

Investigation of the Changes of Resistance of Barrier Layers in Cuprous Oxide Rectifiers Subjected to Thermal Ageing

where V is the applied voltage, C is the barrier-layer capacitance, ε is the permittivity of cuprous oxide and e is the electron charge. Fig.1 shows plots of $V(1/C^2)$ for samples prepared by oxidation at 1020°C (30 and 12 hours) and at 950°C (12 hours). Fig.2 shows similar plots for samples oxidized at 1020°C (12 hours) and subsequently annealed at 600°C (30 and 9 hrs) or at 400°C (9 hours). Figs. 3 and 4 show the change in the impurity-centre concentration as a function of the barrier-layer thickness, for various temperatures and durations of oxidation (Fig.3) and annealing (Fig.4). Thermal ageing reduced the diffusion potential, increased the barrier-layer thickness and altered the impurity-centre concentration in barrier-layers; the actual changes of the impurity-centre concentration depended on the conditions of oxidation and annealing. Fig.5 shows the relative change of the barrier-layer resistance plotted against duration of ageing. The continuous curves in Fig.5 represent the results obtained by means of a bridge circuit, the dashed curves represent

Card 2/3

APPROVED FOR RELEASE: 08/23/2000 CIA-RDP86-00513R001548920002-0"

"APPROVED FOR RELEASE: 08/23/2000 CIA-RDP86-00513R001548920002-0

S/139/61/000/006/019/023
E194/E484

AUTHORS: Kuznetsov, V.I., Shchevelev, M.I.

TITLE: The influence of heat treatment and the ageing process on the width of the impurity zone of the blocking layer of cuprous oxide rectifiers

PERIODICAL: Izvestiya vysshikh uchebnykh zavedeniy. Fizika. no.6, 1961, 145-149

TEXT: Specimens were prepared by the usual furnace method from electrolytic copper discs 1 mm thick and 18 mm diameter. The oxidation time was 12 minutes at a temperature of 1020°C. The annealing times were 9 and 30 minutes at 600 and 400°C. The electrical conductivity of the semiconducting layer of the cuprous oxide rectifiers was measured by a compensation method from the voltage drop on the layer with direct current of 10 mA in the forward direction. The back current density was measured with a constant back voltage of 1 V. The measurements were made in the temperature range 20 to 80°C. After the first measurement had been made the rectifiers were placed in a thermostat at a temperature of 50°C where they were held for 40 days after which

Card 1/4

APPROVED FOR RELEASE: 08/23/2000 CIA-RDP86-00513R001548920002-0"

"APPROVED FOR RELEASE: 08/23/2000 CIA-RDP86-00513R001548920002-0

S/139/61/000/006/019/023
E194/E484

The influence of heat treatment ...

the measurements were repeated. Curves of log $\sigma(1/T)$ where σ = conductivity, are not straight lines but smooth curves which at best might be replaced by two straight lines with an inflection point at a temperature of 40 to 50°C. The curves are of different shapes in rectifiers with different heat treatment. annealing both increases the conductivity and, therefore, the number of impurity centres and also increases the energy of activation. Rectifiers annealed at 600°C are characterized by an inflection in the curve of log $\sigma(1/T)$. Apparently annealing increases the concentration of impurity centres and the thickness of cuprous oxide and also leads to the formation of a wider impurity zone. The heat treatment conditions influence not only the width of the impurity zone but also the distribution of the concentration of impurity centres between energies of activation within the zone. As the temperature increases there is apparently an increase in the number of ionizing impurity centres with higher energy of activation and, consequently, there is an increase in the mean value of the energy of activation. Curves of the resistance of the blocking layer as function of

Card 2/4

APPROVED FOR RELEASE: 08/23/2000 CIA-RDP86-00513R001548920002-0"

"APPROVED FOR RELEASE: 08/23/2000 CIA-RDP86-00513R001548920002-0

temperature before and after ageing show that rectifiers annealed at 600°C have considerably lower resistance of the blocking layer at higher temperatures. Rectifiers annealed at 400°C have the maximum resistance at low temperatures. Ageing causes the greatest change in the low temperature part of the curves of the resistance as function of temperature. The results also indicate that annealing at 600°C leads not only to irregular distribution of impurity centres throughout the thickness of the blocking layer, which has been established previously, but also to the formation of a wider impurity zone. Measurements carried out on aged specimens showed that the reduction of the concentration of impurity centres in the blocking layer occurs primarily as a result of association of impurity centres with lower energy of activation, that is there is a reduction in the density of impurity levels and in the width of the impurity zone in the blocking layer resulting from destruction of impurity levels of lower energy of activation. There are 6 figures and 7 references: 3 Soviet-bloc and 4 non-Soviet-bloc.

APPROVED FOR RELEASE: 08/23/2000 CIA-RDP86-00513R001548920002-0"

"APPROVED FOR RELEASE: 08/23/2000 CIA-RDP86-00513R001548920002-0

The influence of heat treatment ... S/139/61/000/006/019/023
E194/E484

ASSOCIATION: Voronezhskiy politekhnicheskiy institut (Voronezh Polytechnical Institute)

SUBMITTED: October 17, 1960

Card 4/4

APPROVED FOR RELEASE: 08/23/2000 CIA-RDP86-00513R001548920002-0"

"APPROVED FOR RELEASE: 08/23/2000 CIA-RDP86-00513R001548920002-0

29553
S/106/61/000/011/005/006
A055/A127

9,2520 (1139,1159,1161)

AUTHORS: Fedorov, D. P. and Shchevelev, M. I.

TITLE: Broadband correction of the input admittance of a transistor.

PERIODICAL: Elektrosvyaz', no. 11, 1961, 35 - 40

TEXT: The authors analyze the effect of the frequency-dependence of the transistor input admittance on the frequency response of a multi-stage amplifier. A simple correction method is given, permitting to render the input admittance active and constant within a wide frequency band. The complex transfer constant of the multi-stage amplifier (Figure 1) is:

$$\overset{*}{K} = \frac{\overset{*}{U}_2}{\overset{*}{U}_1} = \overset{*}{K}_{inp} \prod_{i=1}^{n} \overset{*}{K}_i \qquad (1)$$

In this formula, $\overset{*}{K}_{inp} = \overset{*}{U}_{inp\ 1}/\overset{*}{U}_1$ is:

Card 1/10

APPROVED FOR RELEASE: 08/23/2000 CIA-RDP86-00513R001548920002-0"

"APPROVED FOR RELEASE: 08/23/2000 CIA-RDP86-00513R001548920002-0

$$\overset{*}{K}_{inp} = \frac{1}{1 + \overset{*}{Z}_{gen}\,\overset{*}{Y}_{inp\ 1}} \qquad (2)$$

and $\overset{*}{K}_i$ (voltage amplification factor of the i-th stage) is:

$$\overset{*}{K}_i = \frac{\overset{*}{Y}_{21i}}{\overset{*}{Y}_{22i} + \overset{*}{Y}_{load\ i}} \qquad (3)$$

$\overset{*}{Y}_{load\ i}$ being the admittance of the load of the i-th stage. For all stages, save the n-th $\overset{*}{Y}_{load\ i} = \overset{*}{Y}_{inp\ (i+1)}$. On the other hand:

$$\overset{*}{Y}_{inp\ i} = \overset{*}{Y}_{11i} - \overset{*}{Y}_{12i}\,\frac{\overset{*}{Y}_{21i}}{\overset{*}{Y}_{22i} + \overset{*}{Y}_{load\ i}} = \overset{*}{Y}_{11i} + \overset{*}{Y}_{12i}\,\overset{*}{K}_i \qquad (4)$$

In the case of the examined amplifier, K_i is small; therefore, it can be assumed.

APPROVED FOR RELEASE: 08/23/2000 CIA-RDP86-00513R001548920002-0"

"APPROVED FOR RELEASE: 08/23/2000 CIA-RDP86-00513R001548920002-0

as a first approximation, that:

$$\overset{*}{Y}_{inp\ i} = \overset{*}{Y}_{11i} \qquad (5)$$

The frequency-dependence of Y_{11i} in the common-emitter arrangement is presented in Figure 2. The elements of this circuit can be considered as frequency-independent up to frequencies approaching ω_α (limit frequency of current amplification in the common-base arrangement). In this circuit, r_b is the effective base resistance,

$$r_{11} = \frac{1}{g_{em}\,(1 - \alpha_0)} \quad \text{and} \quad C_{11} = \frac{1.2\ g_{em}}{\omega_\alpha}\ .$$

α_0 is here the current amplification in the common-base arrangement at low frequencies; $g_{em} = I_{em\ 0}\frac{e}{KT}$ is the diffusion conductance of the emitter; $I_{em\ 0}$ is the direct component of the emitter current; e is the electron charge; k is the Boltzmann constant; T is the absolute temperature. It follows from the circuit of Figure 2 that:

APPROVED FOR RELEASE: 08/23/2000 CIA-RDP86-00513R001548920002-0"

"APPROVED FOR RELEASE: 08/23/2000 CIA-RDP86-00513R001548920002-0

and ceases to depend on frequency. If $R_{gen} \gg r_b + r_{11}$, a simple formula can be derived vom Eq. (7), determining the upper limit frequency of $\overset{*}{K}_{inp}$. This formula is:

$$\omega_{lim} = \frac{1 + \frac{r_{11} + r_b}{R_{gen}}}{\tau_{11}} \qquad (8)$$

It shows that, at $R_{gen} \gg r_{11} + r_b$, the limit frequency is determined by the input-circuit time-constant τ_{11}:

$$\omega'_{lim} = \frac{1}{\tau_{11}} = \frac{\omega_\alpha (1 - \alpha_0)}{1,2} \qquad (9)$$

A graph shows that, when R_{gen} decreases, the increase of the limit frequency is insignificant. The conclusion is that the limit frequency of the amplifier with common-emitter arrangement exceeds but slightly the upper limit of the sound

APPROVED FOR RELEASE: 08/23/2000 CIA-RDP86-00513R001548920002-0"

"APPROVED FOR RELEASE: 08/23/2000 CIA-RDP86-00513R001548920002-0

range. The use of a simple parallel inductive correction permits, however, to improve substantially the frequency-dependence of the input admittance. Figure 4 is the equivalent circuit of the i n p u t admittance and of the correcting two-terminal network. The equivalent admittance is:

$$\overset{*}{Y}_{eq} = \overset{*}{Y}_{11} + \overset{*}{Y}_{cor} = \frac{1}{r_b + r_{11}} \frac{1 + i\omega\tau_{11}}{1 + i\omega\tau_0} + \frac{1}{R(1 + i\omega\tau_{cor})} \qquad (10)$$

where $\tau_{cor} = L/R$ is the time-constant of the correcting circuit. From (10) we obtain:

$$\frac{\overset{*}{Y}_{eq}}{Y_{eq\,0}} = \frac{1 - \eta^2 kl + i\eta[1 + l + al(k - 1)]}{1 - \eta^2 k + i\eta(k + 1)} \qquad (11)$$

where $Y_{eq\,0} = \frac{1}{r_b + r_{11}} + \frac{1}{R} = \frac{1}{r_b l}$; $K = \frac{\tau_{cor}}{\tau_0}$ is the correction factor, the other symbols being the same as in (7). The frequency and the phase characteristics of

APPROVED FOR RELEASE: 08/23/2000 CIA-RDP86-00513R001548920002-0"

"APPROVED FOR RELEASE: 08/23/2000 CIA-RDP86-00513R001548920002-0

the input admittance are given, respectively, by:

$$\frac{Y_{eq}}{Y_{eq\,0}} = \sqrt{\frac{(1 - \eta^2 kl)^2 + \eta^2 [1 + l + al(k - 1)]^2}{(1 - \eta^2 k)^2 + \eta^2 (k + 1)^2}} \qquad (12)$$

$$\varphi = \operatorname{arc\,tg} \eta \frac{(1 - \eta^2 k)[1 + l + al(k - 1)] - (1 - \eta^2 kl)(k + 1)}{(1 - \eta^2 k)(1 - \eta^2 kl) + \eta^2 [1 + l + al(k - 1)](k + 1)} \qquad (13)$$

It follows from (12) and (13) that, when:

$$K = K_0 = 1 \quad \text{and} \quad l = l_0 = 1, \qquad (14)$$

$$Y_{eq} = Y_{eq\,0} \quad \text{and} \quad \varphi = 0$$

This means that the input admittance is active and frequency-independent. Correction according to conditions (14) has, however, the following drawback: the equivalent input admittance proves large, which considerably reduces the amplification of

APPROVED FOR RELEASE: 08/23/2000 CIA-RDP86-00513R001548920002-0"

"APPROVED FOR RELEASE: 08/23/2000 CIA-RDP86-00513R001548920002-0

the preceding stage. The input admittance is reduced when $l > l_0$, but it ceases then to be purely active. The "Braude" criterion makes it possible to find the condition ensuring the optimum frequency characteristic of the input admittance:

$$[1 + l + al(K_{opt} - 1)]^2 = K_{opt}^2 + 2K_{opt}l + 1 \qquad (17)$$

From formula (17) the optimum correction parameter is derived:

$$K_{opt} = \frac{\sqrt{\frac{2l(l+1)(1-a)}{1-al}} - l(1-a)}{1+al} \qquad (18)$$

The dependence of the limit frequency of the optimum frequency characteristic on the parameter l is given by the following expression:

$$\eta_{lim\,opt} = \sqrt{\frac{K_{opt}^2 - 1}{2K_{opt}^2(l^2 - 2)}\left[1 + \sqrt{1 + \frac{4K_{opt}^2(l^2 - 2)}{(K_{opt}^2 + 1)^2}}\right]} \qquad (19)$$

When $l \leq -\sqrt{2}$, the input admittance remains practically constant (as shown by a

APPROVED FOR RELEASE: 08/23/2000 CIA-RDP86-00513R001548920002-0"

"APPROVED FOR RELEASE: 08/23/2000 CIA-RDP86-00513R001548920002-0

29553

S/106/61/000/011/005/006

Broadband correction of the input A055/A127

graph) within a wide frequency band. An experimental check of the results obtained with the above set of formulae is given at the end of the article. The experimental data coincide, with sufficient accuracy, with the theoretically obtained results. There are 7 figures, 3 Soviet-bloc and 2 non-Soviet-bloc references. The references to the English-language publications read as follows: Zavels. Physical theory of new circuit representation for junction transistors. "Journ. Appl. Phys.", 1954, v. 25, No. 8; Pritchard. Frequency variations of junction transistors parameters. "Proc. IRE.", 1954, v. 42, No. 5.

SUBMITTED: March 23, 1961.

[Abstracter's note: The following subscripts are translated in formulae and text: gen (generator) stands for г ; inp stands for вх ; load stands for н ; b (base) stands for б ; em (emitter) stands for э ; eq (equivalent) stands for э ; lim (limit) stands for пр ; opt (optimum) stands for опт ; cor (correction) stands for к .

Card 9/10

APPROVED FOR RELEASE: 08/23/2000 CIA-RDP86-00513R001548920002-0"

"APPROVED FOR RELEASE: 08/23/2000 CIA-RDP86-00513R001548920002-0

37575
S/106/62/000/005/007/007
A055/A101

9.4310

AUTHORS: Fedorov, D.P.; Shchevelev, M.I.

TITLE: On the approximate phase-frequency and transient characteristics of the current transmission coefficient of the junction transistor

PERIODICAL: Elektrosvyaz', 16, no. 5, 1962, 72 - 74

TEXT: The current transmission coefficient (at short-circuit in the common base arrangement) is:

$$\alpha = \gamma \operatorname{sech} \frac{W_0}{L_p} \sqrt{1 + i\omega\tau_p}, \quad (1)$$

where γ is the emitter efficiency, W_0 the width of the base region, L_p the diffusion length of the holes in the base region (in p-n-p transistors), τ_p the life-time of the holes, ω the angular frequency. This formula is, however, too complicated for calculations and leads to cumbersome expressions for the transient characteristic $\alpha(t)$. Several approximate expressions have been suggested, therefore, for the phase-frequency and transient characteristics of α. The author suggests an approximation rather similar to that put forward by T.M. Aga-

Card 1/3

APPROVED FOR RELEASE: 08/23/2000 CIA-RDP86-00513R001548920002-0"

"APPROVED FOR RELEASE: 08/23/2000 CIA-RDP86-00513R001548920002-0

khanyan (Radiotekhnika, 1958, v. 13, no. 2). Referring to the work of Ya.A. Kamenetskiy [Ekivalentnyye skhemy kristallicheskikh triodov, "Poluprovodnikovyye pribory i ikh primeneniya" (Crystal triode equivalent circuits, "Semiconductor devices and their applications"), Collection of articles edited by Ya.A. Fedorov, Izd. "Sov. Radio", 1957, no. 2], the author writes:

$$\alpha = \frac{\alpha_0}{(1 + i\eta\omega_\alpha T)(1 + i\eta m\omega_\alpha T)}, \qquad (4)$$

where $\eta = \omega/\omega_\alpha$, $\alpha_0 = \gamma \operatorname{sech} \frac{W_0}{L_p}$ and m and T are coefficients chosen from the coincidence condition of the modulus and phase of (1) and (4) on the limit frequency ω_α. The functions $m = f_1(\alpha_0)$ and $\omega_\alpha T = f_2(\alpha_0)$ are represented graphically. The comparative analysis of the various graphs showing the phase-frequency characteristics calculated according to formulae (1), (4) and to the Agakhanyan formula leads the author to the conclusion that, for technical calculations, it is altogether possible to use the averaged values m_{aver} and $\omega_\alpha T_{aver}$. Replacing in (4) $i\omega$ by the complex operator p, the author obtains

APPROVED FOR RELEASE: 08/23/2000 CIA-RDP86-00513R001548920002-0"

"APPROVED FOR RELEASE: 08/23/2000 CIA-RDP86-00513R001548920002-0

the following expression (in operator form) for the transient characteristic:

$$x(p) = \frac{x_0}{(1 + pT)\,(1 + pmT)} \,. \qquad (6)$$

To this expression corresponds the following integrated transient characteristic:

$$\frac{x(t)}{x_0} = 1 - \frac{1}{1 - m}\, e^{-\frac{\theta}{\omega_\alpha T}} + \frac{m}{1 - m}\, e^{-\frac{\theta}{\omega_\alpha mT}} \,, \qquad (7)$$

where $\theta = \omega_\alpha t$. The Soviet personalities mentioned in the article are: E.I. Adirovich, V.G. Kolotilova, and A.A. Grinberg. There are 4 figures.

SUBMITTED: June 10, 1961

APPROVED FOR RELEASE: 08/23/2000 CIA-RDP86-00513R001548920002-0"

"APPROVED FOR RELEASE: 08/23/2000 CIA-RDP86-00513R001548920002-0

42209

S/139/62/000/005/014/015
E032/E314

9,3150

AUTHORS: Kuznetsov, V.I. and Shchevelev, M.I.

TITLE: On the diffusion of impurity centres in the barrier layer of copper-oxide rectifiers

PERIODICAL: Izvestiya vysshikh uchebnykh zavedeniy, Fizika, no. 5, 1962, 161 - 163

TEXT: Application of a reverse voltage to a copper-oxide rectifier gives rise to a creep effect in which the reverse current gradually increases but reaches its original value after the voltage is removed. Prolonged application of the reverse voltage leads to an even greater increase in the reverse current. It is noted that the stability of this new value of the reverse current has not as yet been investigated. In order to obtain some information on this phenomenon the authors have carried out an experimental study of the properties of copper-oxide rectifiers produced from the MO electrolytic copper. The copper specimens were in the form of discs, 1.5 cm in diameter and 0.1 cm thick. The oxidation temperature was 1 020 °C and the oxidation time was 12 min. A number of the rectifiers were prepared without annealing and the

Card 1/3

APPROVED FOR RELEASE: 08/23/2000 CIA-RDP86-00513R001548920002-0"

"APPROVED FOR RELEASE: 08/23/2000 CIA-RDP86-00513R001548920002-0

S/139/62/000/005/014/015
E032/E314

On the diffusion of ....

remainder with annealing for 4 min at 600 °C. The reverse current was measured for all the rectifiers at 1 V reverse potential difference, using the method described by the present authors and A.I. Andriyevskiy (Dokl. L'vovskogo politekh. instituta, 3, v.1 and 2, 1958; Izv. vuzov SSSR, Fizika, no. 4, 1960 (present authors only)). A determination was also made of the distribution of ionized impurity centres in the barrier layer. A bridge circuit was then used to measure the capacitance and the resistance of the barrier layer corresponding to a bias voltage of 4 V. After the first determination the rectifiers were connected to an AC voltage (reverse voltage of 4 V, rectified current 5 - 30 mA) for 50 days, after which a second measurement was made. The rectifiers were then placed in a dessicator at room temperature and all the measurements were repeated after 18, 45 and 140 hours. It was found that when the reverse voltage was applied, the resistance of the barrier layer decreased with time but as soon as the bias was removed the resistance again increased. This behaviour was associated with the diffusion of impurity centres in the barrier layer. Comparison of the impurity-centre distributions in annealed and unannealed specimens showed that prolonged passage of

Card 2/3

APPROVED FOR RELEASE: 08/23/2000 CIA-RDP86-00513R001548920002-0"

"APPROVED FOR RELEASE: 08/23/2000 CIA-RDP86-00513R001548920002-0

AC through the rectifier led to an increase in the concentration of ionized impurity centres and to a more nonuniform distribution in the barrier layer, particularly in the unannealed rectifiers. In annealed rectifiers there is also an increase in the gradient of the impurity-centre concentration. Ionized impurity centres in copper oxide are electronegative and diffuse into the barrier layer under the action of the reverse component of the alternating voltage. The changes in the resistance are consistent with the diffusion mechanism. The field strength was not sufficient to increase appreciably the current-carrier concentration. It was found that 140 hours after removal of the bias, the impurity-centre distribution in the barrier layer returned practically to the original distribution although the concentration in the initial part of the layer was found to be somewhat lower than originally. This is ascribed to the association of impurity centres (see references mentioned above). There are 4 figures.

ASSOCIATION: Voronezhskiy vecheniy politekhnicheskiy institut (Voronezh Evening Polytechnical Institute)

SUBMITTED: April 24, 1961

APPROVED FOR RELEASE: 08/23/2000 CIA-RDP86-00513R001548920002-0"

"APPROVED FOR RELEASE: 08/23/2000 CIA-RDP86-00513R001548920002-0

KUZNETSOV, V.I.; FEDOROV, D.P.; SHCHEVELEV, M.I.

Leakage and instability of germanium junction transistors. Izv. vys.ucheb.zav.; fiz. no.3:27-31 '63. (MIRA 16:12)

1. Voronezhskiy politekhnicheskiy institut.

APPROVED FOR RELEASE: 08/23/2000 CIA-RDP86-00513R001548920002-0"

"APPROVED FOR RELEASE: 08/23/2000 CIA-RDP86-00513R001548920002-0

ACCESSION NR: AP4043388 S/0181/64/006/008/2530/2533

AUTHORS: Kir'yanova, V. M.; Khukhryanskiy, Yu. P.; Shchevelev, M. I.

TITLE: Dislocations in recrystallized layers of p-type germanium

SOURCE: Fizika tverdogo tela, v. 6, no. 8, 1964, 2530-2533

TOPIC TAGS: recrystallization, dislocation formation, germanium, indium

ABSTRACT: The authors investigated, apparently for the first time, the dependence of the dislocation density in a recrystallized layer of p-type germanium doped with indium on the rate of cooling of samples during the formation of the crystallized layer. The dislocation density in the initial germanium ranged from 2.5 to 7.4 x x 10^9 cm^{-2}. The results show that the dislocation density in the recrystallized layer is approximately 1.5--2 times larger than in the original germanium, in the cooling-rate interval from 200 to

Card 1/2

APPROVED FOR RELEASE: 08/23/2000 CIA-RDP86-00513R001548920002-0"

"APPROVED FOR RELEASE: 08/23/2000 CIA-RDP86-00513R001548920002-0

ACCESSION NR: AP4019004 S/0146/64/007/001/0149/0152

AUTHOR: Yeremin, S. A.; Shchevelev, M. I.

TITLE: Device for measuring transient response of semiconductor diodes

SOURCE: IVUZ. Priborostroyeniye, v. 7, no. 1, 1964, 149-152

TOPIC TAGS: semiconductor, diode, semiconductor diode, semiconductor diode transient response, semiconductor diode characteristic

ABSTRACT: A new instrument is described which, in conjunction with a pulse generator and an oscilloscope, permits measuring the transient response of semiconductor diodes under conditions of a single current pulse or switching. Elementary physical phenomena that transpire in a diode are considered. Operating procedures for the measuring scheme presented in Enclosure 1 are described. Orig. art. has: 2 figures.

ASSOCIATION: Voronezhskiy politekhnicheskiy institut (Voronezh Polytechnic Institute)

SUBMITTED: 04Feb63 DATE ACQ: 23Mar64 ENCL: 01

SUB CODE: GE NO REF SOV: 003 OTHER: 004

Card 1/1

APPROVED FOR RELEASE: 08/23/2000 CIA-RDP86-00513R001548920002-0"

"APPROVED FOR RELEASE: 08/23/2000 CIA-RDP86-00513R001548920002-0

L 64284-65 EWT(1)/EWT(m)/EEC(k)-2/T/EWP(t)/EWP(b)/EWA(h) IJP(c) JD/GS

ACCESSION NR: AT5020464 UR/0000/64/000/000/0185/0189

AUTHOR: Shchevelev, M. I.; Fedorov, D. P.; Kuznetsov, V. I.

TITLE: Leakage and noises in germanium transistors

SOURCE: Mezhvuzovskaya nauchno-tekhnicheskaya konferentsiya po fizike poluprovodnikov (poverkhnostnyye i kontaktnyye yavleniya). Tomsk, 1962. Poverkhnostnyye i kontaktnyye yavleniya v poluprovodnikakh (Surface and contact phenomena in semiconductors). Tomsk, Izd-vo Tomskogo univ., 1964, 185-189

TOPIC TAGS: radio noise, collector emitter junction, semiconductor research, germanium transistor/ P4 germanium transistor

ABSTRACT: The authors study the relationship between excessive noises and leakage at the collector junctions in P4 alloyed-junction germanium transistors and explain the effect of temperature on noises in these transistors. A 28IM measuring amplifier was used to determine the combined noise current in the 0.2-10 kc range, with simultaneous measurement of the spectral distribution of noise intensity. Graphs of the results are given. The experimental data indicate that excessive noise in the collector junction in these transistors is a function of the leakage current,

Card 1/2

APPROVED FOR RELEASE: 08/23/2000 CIA-RDP86-00513R001548920002-0"

"APPROVED FOR RELEASE: 08/23/2000 CIA-RDP86-00513R001548920002-0

L 64284-65

ACCESSION NR: AT5020464 O

and is nearly independent of the component of the collector current due to thermal generation of the carriers. Orig. art. has: 5 figures.

ASSOCIATION: none

SUBMITTED: 06Oct64 ENCL: 00 SUB CODE: EC

NO REF SOV: 001 OTHER: 002

Card 2/2

APPROVED FOR RELEASE: 08/23/2000 CIA-RDP86-00513R001548920002-0"

"APPROVED FOR RELEASE: 08/23/2000 CIA-RDP86-00513R001548920002-0

L 58318-65 EWT(1)/EWT(m)/T/EWP(t)/EWP(b)/EWA(h)/EWA(c) Pz-6/Peb IJP(c)
JD/AT

ACCESSION NR: AP5011381 UR/0139/65/000/002/0023/0027

30
29
B

AUTHORS: Yeremin, S. A.; Kir'yanova, V. M.; Shchevelev, M. I.

TITLE: Effect of innate dislocations in alloyed p-n junctions on the duration of the transient processes

21

SOURCE: IVUZ. Fizika, no. 2, 1965, 23-27

TOPIC TAGS: alloyed junction, pn junction, transient process, dislocation density, diode characteristic, diode pulse

ABSTRACT: To check on the effect that innate dislocations in semiconductor diodes have on their electric characteristics, the authors investigated the transients occurring in silicon alloyed p-n junctions with various dislocation densities. The effect of dislocations was studied as they affect the following parameters: a) the decay time of the post-current voltage when the diode is turned off; b) the time of diffusion of the accumulated charge, and c) the time of recovery of the inverse resistance after the diode is switched over

Card 1/3

APPROVED FOR RELEASE: 08/23/2000 CIA-RDP86-00513R001548920002-0"

"APPROVED FOR RELEASE: 08/23/2000 CIA-RDP86-00513R001548920002-0

L 58318-65
ACCESSION NR: AP5011381

from the forward to inverse direction. The p-n junctions were made from silicon single crystals with identical resistivity (70 ohm-cm) and with identical impurity concentration gradients, but with different density of natural dislocations (3×10^3 and 1.5×10^5 cm^{-2}). The test equipment is briefly described. The results show that the higher the dislocation density the shorter the duration of the transients. The experimental results are in good agreement with the calculation. An increase in the dislocation density from 3×10^3 to 1.5×10^5 cm^{-2} has made it possible to reduce the recovery times by a factor 1.5 -- 2 without adversely affecting the electric characteristics of the diodes (type V-226). Original article has: 7 figures and 4 formulas

ASSOCIATION: Voronezhskiy politekhnicheskiy institut (Voronezh Polytechnic Institute)

Card 2/3

APPROVED FOR RELEASE: 08/23/2000 CIA-RDP86-00513R001548920002-0"

"APPROVED FOR RELEASE: 08/23/2000 CIA-RDP86-00513R001548920002-0

L 58318-65

ACCESSION NR: AP5011381

0

SUBMITTED: 24Jul63 ENCL: 00 SUB CODE: SS,EC

NR REF SOV: 006 OTHER: 002

Card 3/3

APPROVED FOR RELEASE: 08/23/2000 CIA-RDP86-00513R001548920002-0"

"APPROVED FOR RELEASE: 08/23/2000 CIA-RDP86-00513R001548920002-0

L 01295-66 EWT(m)/EWP(t)/EWP(b) IJP(c) JD/GS

ACCESSION NR: AT5020463 UR/0000/64/000/000/0177/0184

AUTHOR: Fedorov, D. P.; Shchevelev, M. I.; Kuznetsov, V. I.

TITLE: Effect of leakage on the stability of germanium transistor parameters

SOURCE: Mezhvuzovskaya nauchno-tekhnicheskaya konferentsiya po fizike poluprovodnikov (poverkhnostnyye i kontaktnyye yavleniya). Tomsk, 1962. Poverkhnostnyye i kontaktnyye yavleniya v poluprovodnikakh (Surface and contact phenomena in semiconductors). Tomsk, Izd-vo Tomskogo univ., 1964, 177-184

TOPIC TAGS: collector emitter junction, germanium transistor/ P4 germanium transistor

ABSTRACT: The authors study the effect of leakage in the collector junction on the stability of the collector current and the amplification factor in P4A-P4D germanium alloyed-junction transistors. The studies showed that the form of the current-voltage curve for the collector junction depends on the nature of the function $I_{leak}(V_{col})$ (see fig. 1 of the Enclosure). Investigation of the nature of collector current instability in type P4 transistors showed various forms of changes in the collector current with a definite collector voltage at room temperature. In one

Card 1/4

APPROVED FOR RELEASE: 08/23/2000 CIA-RDP86-00513R001548920002-0"

"APPROVED FOR RELEASE: 08/23/2000 CIA-RDP86-00513R001548920002-0

L 01295-66

ACCESSION NR: AT5020463

group of transistors, only a reduction in current was observed (negative current creep), in another--only an increase (positive current creep). In a third group of transistors, the collector current first decreased and then increased. The ratio between the two sections of the curve which correspond to negative and positive creep varies with the voltage on the collector. All samples aged in a humid atmosphere have a positive collector current creep. In the overwhelming majority of transistors which have a positive current creep at room temperature, there is a reversal in this creep when the temperature is reduced to -20°C. A transition from positive creep to negative is also observed after the specimens are dried in vacuum at 100°C for 5 hours. There is a transition from negative to positive creep when the temperature is increased. However, there were specimens which kept their negative current creep up to temperatures of 60°C. The various types of instability in the reverse currents of these *p-n-p* germanium transistors is attributed to differences in the adsorption of water vapor on the germanium surface. Orig. art. has: 4 figures, 5 formulas

ASSOCIATION: Voronezhskiy politekhnicheskiy institut (Voronezh Polytechnic Institute)

Card 2/4

APPROVED FOR RELEASE: 08/23/2000 CIA-RDP86-00513R001548920002-0"

"APPROVED FOR RELEASE: 08/23/2000 CIA-RDP86-00513R001548920002-0

L 01295-66

ACCESSION NR: AT5020463

SUBMITTED: 06Oct64 ENCL: 01 SUB CODE: EC

NO REF SOV: 002 OTHER: 001

Card 3/4

APPROVED FOR RELEASE: 08/23/2000 CIA-RDP86-00513R001548920002-0"

"APPROVED FOR RELEASE: 08/23/2000 CIA-RDP86-00513R001548920002-0

L 01295-66

ACCESSION NR: AT5020463

ENCLOSURE: 01

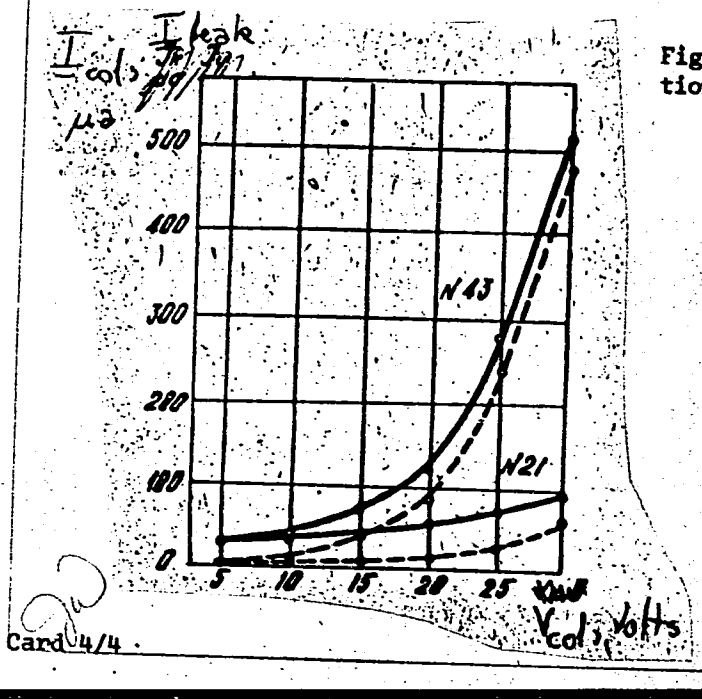

Fig. 1. Collector voltage as a function of leakage current

Card 4/4

APPROVED FOR RELEASE: 08/23/2000 CIA-RDP86-00513R001548920002-0"

"APPROVED FOR RELEASE: 08/23/2000 CIA-RDP86-00513R001548920002-0

L 1133-66 EWT(1)/EEC(k)-2/T/EWA(h) IJP(c) GS

ACCESSION NR: AT5020479 UR/0000/64/000/000/0328/0334

AUTHORS: Kuznetsov, V. I.; Shchevelev, M. I.; Fedorov, D. P.

TITLE: Temperature dependence of parameters of plane silicon diodes

SOURCE: Mezhvuzovskaya nauchno-tekhnicheskaya konferentsiya po fizike poluprovodnikov (poverkhnostnyye i kontaktnyye yavleniya). Tomsk, 1962. Poverkhnostnyye i kontaktnyye yavleniya v poluprovodnikakh (Surface and contact phenomena in semiconductors). Tomsk, Izd-vo Tomskogo univ., 1964, 328-334

TOPIC TAGS: volt ampere characteristic, silicon diode, electric current / D202 diode, D205 diode

ABSTRACT: Results from experimental investigation of the temperature dependence of the back volt-ampere characteristics and break-through voltage of plane silicon high-voltage diodes of the type D202-D205 are reported. Parameters of the diodes were measured in the temperature interval of 20-170C. At low return voltages the current increases with the temperature, while at high voltages the opposite takes place, leading to the increase of the break-through voltage of the diode. Figure 1 on the Enclosure shows characteristic curves for the temperature dependence of the break-through voltage. It is concluded that two processes occur in silicon diodes, one of which leads to an increase in the return current with temperature,

Card 1/3

APPROVED FOR RELEASE: 08/23/2000 CIA-RDP86-00513R001548920002-0"

"APPROVED FOR RELEASE: 08/23/2000 CIA-RDP86-00513R001548920002-0

L 1133-66
ACCESSION NR: AT5020479

the other to a decrease. The first process is related to the generation of heat in the current carriers and is practically independent of the voltage on the transitions. The second process is connected with the surface changes occurring on the silicon oxide, due to the changes in concentration of chemisorbed moisture with temperature. To support this latter assumption, temperature dependence of 30 silicon transitions on the break-down voltage was recorded. The transitions were then dried for 8 hours in vacuum at 120C, then maintained in moist atmosphere for 5 days, each time recording $V_v(T)$. A detailed chemical explanation of the process is given. Orig. art. has: 4 figures.

ASSOCIATION: none

SUBMITTED: 06Oct64 ENCL: 01 SUB CODE: EC

NO REF SOV: 003 OTHER: 003

Card 2/3

APPROVED FOR RELEASE: 08/23/2000 CIA-RDP86-00513R001548920002-0"

"APPROVED FOR RELEASE: 08/23/2000 CIA-RDP86-00513R001548920002-0

L 1133-66

ACCESSION NR: AT5020479

ENCLOSURE: 01

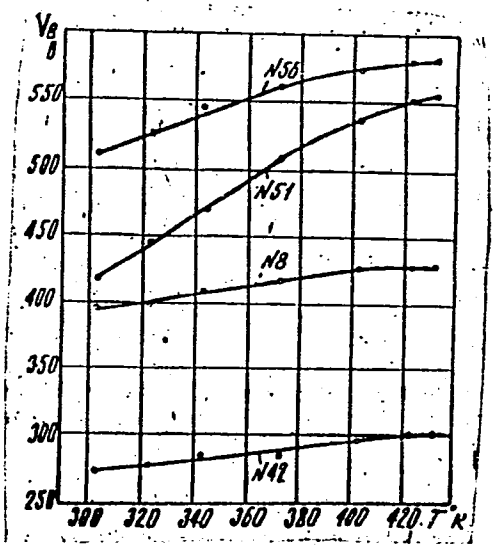

Fig. 1.

Card 3/3

APPROVED FOR RELEASE: 08/23/2000 CIA-RDP86-00513R001548920002-0"

"APPROVED FOR RELEASE: 08/23/2000 CIA-RDP86-00513R001548920002-0

SHCHEVELEV, V., inzh.; ZHIVILOVA, L., inzh.

Construction of the head of a navigation lock by the use of a giant caisson. Rech. transp. 23 no.12:31-33 D '64.
(MIRA 18:6)

1. Gosudarstvennyy institut proyektirovaniya i izyskaniya na rechnom transporte.

APPROVED FOR RELEASE: 08/23/2000 CIA-RDP86-00513R001548920002-0"

"APPROVED FOR RELEASE: 08/23/2000 CIA-RDP86-00513R001548920002-0

SIDEL'KOVSKIY, L.N., kand. tekhn. nauk, dotsent; SHCHEVELEV, V.N., inzh.; KUKHANOVICH, A.I., inzh.

Study of laws governing surface erosion in a fluidized bed. Izv. vys. ucheb. zav.; energ. 7 no.7:48-53 Jl '64 (MIRA 17:8)

1. Moskovskiy ordena Lenina energeticheskiy institut. Predstavlena kafedroy ognevoy promyshlennosti teplotekhniki.

APPROVED FOR RELEASE: 08/23/2000 CIA-RDP86-00513R001548920002-0"

"APPROVED FOR RELEASE: 08/23/2000 CIA-RDP86-00513R001548920002-0

VOL'FKOVICH, S.I.; IONASS, A.A.; KEMEN, N.Ye.; SIDEL'KOVSKIY, L.N.; SHCHEVELEV, V.N.

Hydrothermal processing of phosphates from various deposits. Zhur. prikl. khim. 38 no.1:3-10 Ja '65.

(MIRA 18:3)

APPROVED FOR RELEASE: 08/23/2000 CIA-RDP86-00513R001548920002-0"

"APPROVED FOR RELEASE: 08/23/2000 CIA-RDP86-00513R001548920002-0

[illegible] Kh., [illegible] Mark. [illegible] KHLEV, V.N., inzh.

Mathematical modeling of a partial combustion process in a cyclone chamber. Izv. vys. ucheb. zav.; energ. 3 no.1:[illegible] Ja '60. (MIRA 13:2)

1. [illegible] Leningradskiy [illegible] institut [illegible] kafedry [illegible] promyshlennoy teplotekhniki. Submitted November 16, 1959.

APPROVED FOR RELEASE: 08/23/2000 CIA-RDP86-00513R001548920002-0"

"APPROVED FOR RELEASE: 08/23/2000 CIA-RDP86-00513R001548920002-0

SIDEL'KOVSKIY, L.N.; kand. tekhn. nauk; SHCHEVELEV, V.N., inzh.; BOYTSOV, Yu.M., inzh.

Study of temperature fields and heat currents in a cyclone chamber. Prom. energ. 21 no. 1:44-48 Ja '66 (MIRA 19:1)

APPROVED FOR RELEASE: 08/23/2000 CIA-RDP86-00513R001548920002-0"

"APPROVED FOR RELEASE: 08/23/2000 CIA-RDP86-00513R001548920002-0

S.[illegible]VEL'EVA, A.S., Cand Tech Sci--(diss) "On the flotation properties of oxidized lead minerals of complex composition." Len, 19[illegible]. 16 pp (Acad Sci USSR. Inst of Mining ~~[illegible]~~), 120 copies (KL,2 - 6, 116)

-29-

APPROVED FOR RELEASE: 08/23/2000 CIA-RDP86-00513R001548920002-0"

"APPROVED FOR RELEASE: 08/23/2000 CIA-RDP86-00513R001548920002-0

ANFIMOVA, G.A.; GLEMBOTSKIY, V.A., prof., doktor; PLAKSIN, I.N.; SHCHEVELEVA, A.S.

Stability of securing surface layers of reagents on oxidized minerals during the flotation process with varying pulp basicity. Biul. TSIIN tsvet. met. no.1:10-16 '58. (MIRA 11:4)

1. Chlen-korrespondent AN SSSR (for Plaksin).
(Flotation)

APPROVED FOR RELEASE: 08/23/2000 CIA-RDP86-00513R001548920002-0"

"APPROVED FOR RELEASE: 08/23/2000 CIA-RDP86-00513R001548920002-0

SOV/24-58-4-3/39

AUTHORS: Anfimova, Ye.A., Glembotskiy, V.A., Plaksin, I.N. and Shcheveleva, A.S. (Moscow)

TITLE: On the Flotation Properties of Lead Minerals Difficult to Flotate, in Relation to Their Structural and Crystal Chemical Peculiarities (O flotatsionnykh svoystvakh trudnoflotiruyemykh svintsovykh mineralov v svyazi s ikh strukturnymi i kristallokhimicheskimi osobennostyami)

PERIODICAL: Izvestiya Akademii Nauk SSSR, Otdeleniye Tekhnicheskikh Nauk, 1958, Nr 4, pp 16 - 22 (USSR)

ABSTRACT: The lead minerals investigated were cerussite, anglesite, wulfenite, vanadinite, pyromorphite, mimetite, beudantite $PbFe_3(AsO_4)(SO_4)$ and plumbojarosite $PbFe_6(SO_4)(OH)_{12}$. These are given in this order in Table 1 and are divided into three groups. Group 1 contains the first three which possess similar crystal lattice energies and easy cleavage. Group 2 contains the next three minerals. These possess greater lattice energies, stronger bonds and very weak cleavage. Group 3 contains beudantite and plumbojarosite, the lattice energies being 9-9.5 times and 16-18 times that of the first group, respectively.
The flotation properties were found by measuring the

Card1/3

APPROVED FOR RELEASE: 08/23/2000 CIA-RDP86-00513R001548920002-0"

"APPROVED FOR RELEASE: 08/23/2000 CIA-RDP86-00513R001548920002-0

SOV/24-58-4-3/39

On the Flotation Properties of Lead Minerals Difficult to Flotate, in Relation to Their Structural and Crystal Chemical Peculiarities

electrokinetic potentials of the surfaces, the stability of the films of reagents on the surfaces and the time taken for the mineral to adhere to the bubble of air under various conditions of alkalinity and with various collectors. This was measured by the electronic device used by Glembotskiy (Ref 5).
Results show that the presence of bonds in parallel directions and the absence of volume configurations of ions create favourable conditions for the introduction into the crystal lattice of flotation reagents. Deterioration in flotation properties corresponds to a marked increase in lattice energy. The surfaces of cerussite, anglesite, wulfenite and pyromorphite have a natural hydrophobic character. The surfaces of the other minerals have not. The efficiency of the action of sodium sulphide and xanthogenate decreases in the following order: cerussite, anglesite, wulfenite, vanadinite, pyromorphite, mimetite, beudantite. Preliminary sulphidisation by application of sodium sulphide and xanthogenate as

Card2/3

APPROVED FOR RELEASE: 08/23/2000 CIA-RDP86-00513R001548920002-0"

"APPROVED FOR RELEASE: 08/23/2000 CIA-RDP86-00513R001548920002-0

SOV/24-58-4-3/39

On the Flotation Properties of Lead Minerals Difficult to Flotate, in Relation to Their Structural and Crystal Chemical Peculiarities

collectors must be carried out with strict control of the pH value. "Phosphotene" and "Vetluga" oil (vetluzhskoye maslo), a product of chemical treatment of wood consisting of fatty acids and high-molecular phenols, were found useful as collectors of plumbojarosite, which is not affected by sulphidisation. There are 2 figures, 3 tables and 6 references, 5 of which are Soviet and 1 English.

SUBMITTED: June 20, 1957

Card 3/3

APPROVED FOR RELEASE: 08/23/2000 CIA-RDP86-00513R001548920002-0"

"APPROVED FOR RELEASE: 08/23/2000 CIA-RDP86-00513R001548920002-0

ANFIMOVA, Ye.A.; GLEMBOTSKIY, V.A.; SHCHEVELEVA, A.S.

Flotation of difficult to separate oxide ores of lead. Biul. TSIIN tsvet. met. no. 6:10-15 '58. (MIRA 11:7)
(Flotation)
(Lead ores)

APPROVED FOR RELEASE: 08/23/2000 CIA-RDP86-00513R001548920002-0"

"APPROVED FOR RELEASE: 08/23/2000 CIA-RDP86-00513R001548920002-0

20-119-5-33/59

AUTHORS: Anfimova, Ye. A., Glembotskiy, V. A., Plaksin, I. N., Corresponding Member, AS USSR, Shcheveleva, A.S.

TITLE: The Influence of Structural Features and Surface Properties on the Froth Flotation Extraction of Poorly Floatable Lead Minerals (Vliyaniye strukturnykh osobennostey i poverkhnostnykh svoystv na izvlecheniye pennoy flotatsiyey trudnoflotiruyemykh svintsovykh mineralov)

PERIODICAL: Doklady Akademii Nauk SSSR, 1958, Vol. 119, Nr 5, pp. 961 - 963 (USSR)

ABSTRACT: The present practice of the concentration of useful minerals does not dispose of any methods for a somehow satisfactory production of complicated lead minerals, like pyromorphite $Pb_5(PO_4)_3Cl$, mimetesite $Pb_5(ASO_4)_3Cl$, bedantite $PbFe_3(ASO_4)(SO_4)(OH)_6$ and plumbobojarosite $PbFe_6(SO_4)_4(OH)_{12}$. The continuous incomplete production of lead minerals brings about important lead losses. The complicated chemical structure and

Card 1/3

APPROVED FOR RELEASE: 08/23/2000 CIA-RDP86-00513R001548920002-0"