"APPROVED FOR RELEASE: 08/23/2000 CIA-RDP86-00513R001549010016-4

BYKOV, V.; SHEKHVATOV, M.

At the stations for plant protection. Zashch. rast. ot vred. i bol. 10 no.5:9-10 '65. (MIRA 18:6)

1. Nachal'nik TSelinogradskoy stantsii zashchity rasteniy (for Bykov). 2. Starshiy inzh. Kyubyshvevskoy stantsii zashchity rasteniy (for Shekhvatov).

APPROVED FOR RELEASE: 08/23/2000 CIA-RDP86-00513R001549010016-4"

"APPROVED FOR RELEASE: 08/23/2000 CIA-RDP86-00513R001549010016-4

YEVLAKHOVA, A.A.; SHEKHURINA, T.A.

The antifungal effect of the cuticle of Eurygaster integriceps Put. Dokl.AN SSSR 148 no.4:977-978 F '63. (MIRA 16:4)

1. Vsesoyuznyy nauchno-issledovatel'skiy institut zashchity rasteniy. Predstavleno akademikom Ye.N.Pavlovskim.
(Eurygasters) (Fungi, Pathogenic)

APPROVED FOR RELEASE: 08/23/2000 CIA-RDP86-00513R001549010016-4"

"APPROVED FOR RELEASE: 08/23/2000 CIA-RDP86-00513R001549010016-4

SHEKHVITS, E. I.

"An Investigation of the Dynamic Conditions in the Turning of the Spindle Block of an Automatic Lathe." Cand Tech Sci, Moscow Machine Tool and Tool Inst imeni I. V. Stalin, 29 Dec 54. (VM, 21 Dec 54)

Survey of Scientific and Technical Dissertations Defended at USSR Higher Educational Institutions (12)

SO: SUM No. 556, 24 Jun 55

APPROVED FOR RELEASE: 08/23/2000 CIA-RDP86-00513R001549010016-4"

"APPROVED FOR RELEASE: 08/23/2000 CIA-RDP86-00513R001549010016-4

25(1) PHASE I BOOK EXPLOITATION SOV/2383

Akademiya nauk SSSR. Komissiya po tekhnologii mashinostroyeniya

Avtomatizatsiya mashinostroitel'nykh protsessov. t. II: Privod i upravleniye rabochimi mashinami (Automation of Machine-building Processes. Vol.2: Drives and Control Systems for Process Machinery) Moscow, Izd-vo AN SSSR, 1959. 370 p. Errata slip inserted. 5,000 copies printed.

Ed.: V.I. Dikushin, Academician; Ed. of Publishing House: D.M. Ioffe; Tech. Ed.: I.F. Kuz'min.

PURPOSE: This book is intended for engineers dealing with automation of various machine-building processes.

COVERAGE: This is the second volume of transactions of the second Conference on Overall Mechanization and Automation of Manufacturing Processes held September 25-29, 1956. The present volume consists of three parts, the first dealing with automation of engineering measuring methods. The subjects discussed include automatic control of dimensions of machined parts, inspection methods for automatic production lines, in-process inspection devices, application of electronics in automating linear measuring processes, and machines for automatic inspection of bearing races. The second part deals with automatic drives and control systems for process machinery, including application of digital computers in the control of metal-cutting machine tools, reliability of relay systems, application of gas-tube frequency converters in the control of induction motor speeds, magnetic amplifiers and their use in automatic systems, hydraulic drives, and ultrasonic vibrators. Part three deals with mechanisms of automatic machines and automatic production lines. The subjects discussed include linkage, indexing, and Geneva-wheel-type mechanisms, friction drives, automatic loading devices, diaphragm-type pneumatic drives, various auxiliary devices for automatic production lines, and methods of design and accuracy of cams. No personalities are mentioned. There are no references.

Nakhapetyan, Ye. G. Dynamics and Type of Wear of Geneva-wheel Mechanisms 210

Shekhvits, E.I. Study of Indexing Mechanisms for Tables and Drums of Automatic Machines 222

Cherkudinov, S.A. Linkage Mechanisms of Heavy-duty Drawing Presses 253

Bevkov, G.A. Controlled Friction Drives Made by TsNIITMASh 270

Preys, V.F. Some Problems in the Theory of Loading and Positioning Devices 278

Medvid', M.V. Automatic Feeding of Piece Stock Into Working Machines 292

Kamyshnyy, N.I. Vibratory Loaders for Machine Tools 311

Bubtsov, P.I. Experience Gained by the Avtozavod imeni Likhacheva in Developing Standard Mechanisms for Automating Auxiliary Operations in Metal-cutting Machine Tools 326

Gerts, Ye. V. Designing Diaphragm-type Pneumatic Drives 336

Bron, L.S. Standard Auxiliary Devices for Automatic Lines 352

Borun, P.L. Problems of Profile Design and Cam Accuracy for Process Machinery in Vacuum Tube Industry 363

APPROVED FOR RELEASE: 08/23/2000 CIA-RDP86-00513R001549010016-4"

"APPROVED FOR RELEASE: 08/23/2000 CIA-RDP86-00513R001549010016-4

PHASE I BOOK EXPLOITATION SOV/4585

Vsesoyuznoye soveshchaniye po osnovnym problemam teorii mashin i mekhanizmov. 2d, Moscow, 1958

Teoriya mashin avtomaticheskogo deystviya i teoriya tochnosti v mashinostroyenii i priborostroyenii; sbornik statey (The Theory of Automatic Machines and the Theory of Precision in the Manufacture of Machinery and Instruments: Collection of Articles) Moscow, Mashgiz, 1960. 218 p. (Series: Its: Trudy (tom 3)) Errata slip inserted. 3,000 copies printed.

Sponsoring Agency: Institut mashinovedeniya Akademii nauk SSSR.

Editorial Board: I.I. Artobolevskiy, Academician, (Resp. Ed.), S.I. Artobolevskiy, Professor, Doctor of Technical Sciences, G.G. Baranov, Professor, Doctor of Technical Sciences, A.P. Bessonov, Candidate of Technical Sciences, V.A. Gavrilenko, Professor, Doctor of Technical Sciences, A. Ye. Kobrinskiy, Doctor of Technical Sciences, N.I. Levitskiy, Professor, Doctor of Technical Sciences, Ed.: V.V. and L.N. Reshetov, Professor, Doctor of Technical Sciences, Ed.: V.V. Bystritskaya, Engineer; Tech. Ed.: B.I. Makel'; Managing Ed. for Literature on General Technical and Transport Machine Building (Mashgiz): A.P. Karlov, Engineer.

PURPOSE: This collection of articles is intended for engineers and designers, workers at scientific-research institutes, and instructors at schools of higher technical education.

COVERAGE: The collection contains discussions of precision problems in the manufacture of machines and instruments, the general theory of automatic production machines, and calculation methods for automatic production machines with programmed control. The conference at which these reports were presented was called by the Institute of the Science of Machines of the Academy of Sciences, USSR, and was held in Moscow March 24-28, 1958. The transactions of this conference have been published in 4 volumes of which the present collection is the third. No personalities are mentioned. There are no references, all articles

4. Kuznetsov, M.T., M.V. Nikolaev, and V.F. Fomin [Candidates of Technical Sciences]. Problems in the Theory of Automatic Lathes of Machine Tools and Presses by Piecework Intermediate Products 42
5. Klusenov, M.K. Kinematic and Dynamic Investigations of Mechanisms for Feeding Rods to Automatic Machines 72
6. Klimov, A.A. Investigation of the Interpositivity of the Cycle Diagrams of a Six-Position Automatic Controlled Cutter 80
7. Krutov, G.V. [Candidate of Technical Sciences]. Some Problems in the Productive Capacity of Machines 88
8. Tresnev, G. [Doctor, Professor (Dresden)]. Theory and Investigations of Automatically Operating Machines 94
9. Gromovich, B.A. [Candidate of Technical Sciences]. Systems for Controlling and Driving Mechanisms With Periodic Adjustments in Automatic Machines 104
11. Gladilin, A.G. [Engineer]. Calculation of Tolerances for a Given Precision of a Device 135
12. Golinsevich, T.A. [Candidate of Technical Sciences]. Some Problems in Calculating the Precision of Complex Computing Devices 152
13. Dobrynov, B.G. [Doctor of Technical Sciences]. On Estimating the Accuracy of Analog Computers Designed for the Solution of Ordinary Differential Equations 158
14. Ivanitsky, A.I. [Candidate of Technical Sciences]. Problems of Measuring Technique in Machine Manufacture which Can be Solved on the Basis of the Theory of Precision of Mechanisms 169
15. Mikhaylov, F. A. [Engineer]. On Increasing the Accuracy of Mechanisms by the Method of Adjustment 183
16. Livshits, G.A. [Candidate of Technical Sciences]. Defects in Spiral Reduction Gears as Exciters of Vibration and Noise in Rotorcraft Assemblies 197
17. Bergryev, V.I. [Candidate of Technical Sciences]. On the Design of Automatized Bridge Computers 208

AVAILABLE: Library of Congress (TJ1185.V8 1958)

Card 5/5

AC/vrq/mas
12-30-60

APPROVED FOR RELEASE: 08/23/2000 CIA-RDP86-00513R001549010016-4"

"APPROVED FOR RELEASE: 08/23/2000 CIA-RDP86-00513R001549010016-4

S/196/61/000/004/002/002
E073/E135

AUTHOR: Shekhvits, E.I.

TITLE: Systems of Control and Driving of Mechanisms With Periodic Displacement in Automatic Machinery

PERIODICAL: Referativnyy zhurnal, Elektrotekhnika i energetika, 1961, No. 4, abstract no. 4K107, p 17. Sbornik "Teoriya mashin avtomat. deystviya i teoriya tochnosti v mashinostr. i proborostr.", Moscow, Mashgiz, 1960, 104-124

TEXT: A classification is given of mechanisms with periodic displacement in accordance with the type of displacement and the type of control and driving mechanisms used. In addition to the mechanical and hydraulic control systems, electrical systems with the motors switched on and switched off and electronic servo-systems with selsyn coupling are frequently used. Recently, electric drives have appeared on the market which are provided with a control system permitting setting to a scale division with differing numbers of positions; such drives are used in the swivel table of drilling machines, unit type ("aggregate") and other

Card 1/2

APPROVED FOR RELEASE: 08/23/2000 CIA-RDP86-00513R001549010016-4"

"APPROVED FOR RELEASE: 08/23/2000 CIA-RDP86-00513R001549010016-4

BARSOV, G.A , kand. tekhn. nauk, dots.; BEZMENOVA, L.V., kand. tekhn. nauk, ispolnyayushchiy obyazannosti dots.; GRODZENSKAYA, L.S., kand. tekhn. nauk; ZHELIGOVSKIY, A.V., kand. tekhn.anuk, dots.; KUVSHINNIKOV, G.A.,kand. tekhn. nauk, dots.; KUL'BACHNYY, O.I., kand. tekhn. nauk, ispolnyayushchiy obyazannosti dots.; PANTELEYEV, S.I., kand. tekhn.nauk, dots.; SHEKHVITS, E.I., kand. tekhn. nauk, dots.; YUDENICH, V.V., kand. tekhn. nauk, dots.; NIKOLAYEVA, T.G., red.; GOROKHOVA, S.S., tekhn. red.

[Theory of flat mechanisms and the dynamics of machinery] Teoriia ploskikh mekhanizmov i dinamika mashin. [By] G.A. Barsov i dr. Moskva, Gos. izd-vo "Vysshaia shkola," 1961. 336 p. (MIRA 15:2)

(Mechanical movements) (Mechanical engineering)

APPROVED FOR RELEASE: 08/23/2000 CIA-RDP86-00513R001549010016-4"

"APPROVED FOR RELEASE: 08/23/2000 CIA-RDP86-00513R001549010016-4

SOKOLOV, N.G., kand.tekhn.nauk; SHEKHVITS, E.I., kand.tekhn.nauk

Modernization of the vertical milling machine. Mashinostroitel' no.1:13-14 Ja '61. (MIRA 14:3)
(Milling machines—Technological innovations)

APPROVED FOR RELEASE: 08/23/2000 CIA-RDP86-00513R001549010016-4"

"APPROVED FOR RELEASE: 08/23/2000 CIA-RDP86-00513R001549010016-4

ARTOBOLEVSKIY, I.I., akademik, doktor tekhn. nauk, red.; LEVITSKIY, N.I., doktor tekhn. nauk, prof., red.; KOZHEVNIKOV, S.N., red.; KOBRINSKIY, A.Ye., doktor tekhn. nauk, red.; PETROKAS, L.V., doktor tekhn. nauk, prof., red.; GAVRILENKO, V.A., doktor tekhn. nauk, prof., red.; BESSONOV, A.I., kand. tekhn. nauk, red.; SHEKINITS, E.I., kand. tekhn. nauk, red.

[Theory of automatic machines and of hydraulic and pneumatic drives] Teoriia mashin-avtomatov i gidro-pnevmoprivoda; sbornik statei. Moskva, Mashgiz, 1963. 327 p. (Its: Trudy) (MIRA 17:10)

1. Soveshchaniye po osnovnym problemam teorii mashin i mekhanizmov. 3d, Moscow, 1961. 2. Chlen-korrespondent AN UkrSSR (for Kozhevnikov).

APPROVED FOR RELEASE: 08/23/2000 CIA-RDP86-00513R001549010016-4"

"APPROVED FOR RELEASE: 08/23/2000 CIA-RDP86-00513R001549010016-4

KAZARYAN, A.G.; SHEKHYAN, G.G.

Genesis of the pyrite deposits of the Armenian S.S.R. Dokl. AN Arm. SSR 37 no.1:21-23 '63. (MIRA 16:11)

1. Nauchno-issledovatel'skiy gorno-metallurgicheskiy institut. Predstavleno akademikom AN Armyanskoy SSR S.S.Mkrtchyanom.

APPROVED FOR RELEASE: 08/23/2000 CIA-RDP86-00513R001549010016-4"

"APPROVED FOR RELEASE: 08/23/2000 CIA-RDP86-00513R001549010016-4

VARTAPETYAN, B.S.; KAZARYAN, A.G.; SHEKHYAN, G.G.; AMIRBEKYAN, E.G.

Recent data on the mineralogy of enclosing rocks in the Kafan ore area. Dokl. AN Arm. SSR 37 no.1:25-28 '62. (MIRA 16:11)

1. Nauchno-issledovatel'skiy gorno-metallurgicheskiy institut. Predstavleno akademikom AN Armyanskoy SSR K.N.Paffengol'tsem.

APPROVED FOR RELEASE: 08/23/2000 CIA-RDP86-00513R001549010016-4"

"APPROVED FOR RELEASE: 08/23/2000 CIA-RDP86-00513R001549010016-4

SHEKHYAN, G.G.

Improvement of sampling in mines of the exploited deposits of the Armenian S.S.R. Izv. AN Arm.SSR Nauki o zem. 17 no.6:83-88 '64 (MIRA 18:2)

1. Nauchno-issledovatel'skiy gornometallurgicheskiy institut Soveta narodnogo khozyaystva ArmSSR.

APPROVED FOR RELEASE: 08/23/2000 CIA-RDP86-00513R001549010016-4"

"APPROVED FOR RELEASE: 08/23/2000 CIA-RDP86-00513R001549010016-4

SHMITHAYEV, A. M.

"Controlled Mutation in the Gray Bees of the Caucasus Mountains by Means of Vegetative Hybridization." Cand Biol Sci, Leningrad Veterinary Inst, Leningrad, 1953. (KZhBiol, No 1, Jan 55)

Survey of Scientific and Technical Dissertations Defended at USSR Higher Educational Institutions (13) SO: Sum. 593, 29 Jul 55

APPROVED FOR RELEASE: 08/23/2000 CIA-RDP86-00513R001549010016-4"

"APPROVED FOR RELEASE: 08/23/2000 CIA-RDP86-00513R001549010016-4

ACC NR: AT6028370

AUTHOR: Vartanov, S. P.; Gagel'gants, A. A.; Krolenko, I. I.; Levchenko, V. A. Malovitskiy, Ya. P.; Milashin, A. P.; Rapoport, S. Ya.; Fedynskiy, V. V.; Shapirovskiy, N. T.; Shekinskiy, E. M.

ORG: none

TITLE: Geological results of marine geophysical exploration in the USSR

SOURCE: International Geological Congress. 22d, New Delhi, 1964. Geologicheskiye rezul'taty prikladnoy geofiziki (Geological results of applied geophysics); doklady sovetskikh geologov, problema 2. Moscow, Izd-vo Nedra, 1965, 124-141

TOPIC TAGS: geophysic expedition, earth structure, seismic prospecting, ocean floor topography, tectonics

ABSTRACT: Marine geophysical exploration have been conducted in the Soviet Union for the purpose of investigating the crustal structure, and regional geological investigations have been made in offshore areas which are potential oil- and gas-bearing structures. The seismic method is the most effective and most often used for offshore investigations. Also successful are gravimetric, magnetic, and electric prospecting methods. The technique of offshore seismic shooting has been greatly improved, making it possible to operate from a moving ship. The geophysical investigations conducted on the Caspian Sea made it possible to distinguish the areas of

Card 1/3

APPROVED FOR RELEASE: 08/23/2000 CIA-RDP86-00513R001549010016-4"

"APPROVED FOR RELEASE: 08/23/2000 CIA-RDP86-00513R001549010016-4

ACC NR: AT6028378

the Pre-Cambrian Epihercynian platform and the Alpine geosyncline. Investigations have been made of the regional structure of the south Caspian depression, oil-bearing regions of its folded margins, and gentle structures of the internal depression. The area of the Epihercynian platform has been found to contain Kara-Bugaz and middle Caspian arches and offshore continuation of the South Mangishlack depression as well as folded zones. The continuations of the South Mangishlack and Karpinsky ridge, the north Caspian zone of marginal uplifts of the Pre-Cambrian platform and the offshore continuation of the Pre-Caspian depression have been thoroughly investigated. A number of structures in the southern part of the Caspian Sea have been prepared for deep drilling. At the Sea of Azov a step-like submergence of the southern slope of the Pre-Cambrian platform has been established, and the Azov rampart, which connects the Epihercynian folded structures of the Northern Caucasus and Crimean steppe has been located. Offshore continuations of the Kerch-Taman dislocations have been studied. At the Black Sea geophysicists have studied the hidden Cretaceous folding and deep-seated faults at the offshore continuation of the Kolkhida depression, submergence of the northwestern Caucasus, buried highs south of the Crimea and the jointing between the Crimean and Dobrudga dislocations. Also the structure of the crust and the structure of the sedimentary strata in the deep-sea areas have been studied. Seismic surveys have been conducted to study the geology of the Paleozoic deposits and the surface of the basement in the eastern Baltic Sea. It has been established that the thickness of the sediments within the offshore continuation of the Polish-Lithuanian syneclise does not exceed 3 km. Interesting results have been obtained from geophysical investigations conducted at

Card 2/3

APPROVED FOR RELEASE: 08/23/2000 CIA-RDP86-00513R001549010016-4"

"APPROVED FOR RELEASE: 08/23/2000 CIA-RDP86-00513R001549010016-4

ACC NR: AT6026378

the Kara Sea near the mouths of the Ob and Yenisey Rivers. The regional structure of the Jamal-Nazim depression and the Taimir foredeep has been defined, major platform structures have been located in the Mesozic strata, and the Taimir has been followed further out into the sea. Deep-seated structure of the Earth's crust has been investigated in the transitional zone between the Asian continent and the Pacific Ocean, and also at the Okhotsk Sea and in the area of the Kamchatka-Kurile ridge. It has been found that the Sakhalin Tertiary folding area extends under the waters of the Okhotsk Sea. Marine geophysical exploration in the USSR will be expanded. Orig. art. has: 7 figures.

SUB CODE: 08/ SUBM DATE: 06Jan65/ ORIG REF: 048

Card 3/3

APPROVED FOR RELEASE: 08/23/2000 CIA-RDP86-00513R001549010016-4"

"APPROVED FOR RELEASE: 08/23/2000 CIA-RDP86-00513R001549010016-4

TUMIKYAN, G.G.; SHEKINSKIY, E.M.

New data on the tectonics of the northwestern part of the Apsheron oil-bearing region. Geol. nefti i gaza 7 no.3:40-43 Mr '63. (MIRA 16:4)

(Apsheron Peninsula—Geology, Structural)

APPROVED FOR RELEASE: 08/23/2000 CIA-RDP86-00513R001549010016-4"

"APPROVED FOR RELEASE: 08/23/2000 CIA-RDP86-00513R001549010016-4

15-57-10-15055

Translation from: Referativnyy zhurnal, Geologiya, 1957, Nr 10, p 289 (USSR)

AUTHOR: Shekinskiy, I. M.

TITLE: Effect Produced on the Terminal Zone of Drill Holes (Vozdeystviye na prizaboynuyu zonu skvazhin)

PERIODICAL: V sb.: Za vysokuyu tekhn. kul'turu v dobyche nefti! Baku, 1956, pp 41-46

ABSTRACT: Bibliographic entry

Card 1/1

APPROVED FOR RELEASE: 08/23/2000 CIA-RDP86-00513R001549010016-4"

"APPROVED FOR RELEASE: 08/23/2000 CIA-RDP86-00513R001549010016-4

SH[illegible], [illegible]

41937. BA[illegible]BASHEV, [illegible]. [illegible]. SH[illegible]A, A. T.-- Fotograficheskaya fotometriya lun[illegible]oy poverkhnosti, uchen. Zapiski khar'k gos. un-ta im. Gor'kogo, T. XXVII Publikatsii Astron. Observatorii, T. VIII, 1948, S. 29-50

SO: Letopis' Zhurnal'nykh Statey, Vol. 47, 1948

APPROVED FOR RELEASE: 08/23/2000 CIA-RDP86-00513R001549010016-4"

"APPROVED FOR RELEASE: 08/23/2000 CIA-RDP86-00513R001549010016-4

SHEKMER, V.

Components of records. Kryl. rod. 16 no.6:10-11 Je '65.
(MIRA 18:10)

APPROVED FOR RELEASE: 08/23/2000 CIA-RDP86-00513R001549010016-4"

"APPROVED FOR RELEASE: 08/23/2000 CIA-RDP86-00513R001549010016-4

SHUKKIN, [illegible] gorta, [illegible] mezhdunarodnoy kategorii.

[illegible] Kuyb. red. 15 no.3222 Ag '64
(MIRA 18:1)

APPROVED FOR RELEASE: 08/23/2000 CIA-RDP86-00513R001549010016-4"

"APPROVED FOR RELEASE: 08/23/2000 CIA-RDP86-00513R001549010016-4

PARKHOMENKO, Vasiliy Georgiyevich; ARKHANGEL'SKIY, N.A., prof., retsenzent; BULGAKOV, N.V., prof., retsenzent; ZAYTSEV, V.G. (Moskva), kand.tekhn. nauk, retsenzent; SHEKLAKOV, D.M. (Moskva), prepodavatel', retsenzent; PISHCHANSKAYA, B.A. (Odessa), prepodavatel', retsenzent; GUTAN, M.K., prepodavatel', retsenzent; GOL'DIN, A.E., prepodavatel', retsenzent; KHRYPOV, N.N. (Sverdlovsk), prepodavatel', retsenzent; DERYABINA, L.I., prepodavatel', retsenzent; YEMEL'YANOV, D.M. (Leningrad), prepodavatel', retsenzent; GONCHAROVA, L.D. (Simferopol'), prepodavatel', retsenzent; MATVEYEV, Ye.P., prepodavatel', retsenzent; ALEKSEYEV, I.M., prepodavatel', retsenzent; DUDINSKIY, S.L. (Leningrad), prepodavatel', retsenzent; BABUN, V.B. (Khar'kov), kand.tekhn.nauk, retsenzent; CHERNOV, N.V., prof., doktor tekhn.nauk, spetsred.; BORISOVA, G.A., red.; SUDAK, D.M., tekhn.red.

[Introduction to the study of commerial wares] Vvedenie v tovarovedenie promyshlennykh tovarov. Moskva, Gos.izd-vo torg.lit-ry, 1959. 135 p. (MIRA 12:7)

(Commercial products)

APPROVED FOR RELEASE: 08/23/2000 CIA-RDP86-00513R001549010016-4"

"APPROVED FOR RELEASE: 08/23/2000 CIA-RDP86-00513R001549010016-4

PARKHOMENKO, Vasiliy Georgiyevich; ARKHANGEL'SKIY, N.A., prof., retsenzent; [deceased]; BULGAKOV, N.V., prof., retsenzent; ZAYTSEV, V.G., retsenzent(Moskva); ~~SHEKLAKOV, D.M.,~~ prepodavatel' tekhnikumov sovetskoy torgovli, retsenzent(Moskva); KOZLOVA, Z.V., retsenzent (Moskva); PISHCHENSKAYA, B.A., retsenzent (Odessa); GUTAN, M.K., retsenzent; GOL'DIN, A.E., retsenzent; KHRYPOV, N.N., retsenzent(Sverdlovsk); DERYABINA, L.I., retsenzent; YEMEL'YANOV, D.M., retsenzent (Leningrad); GONCHAROVA, L.D., retsenzent(Simferopol'); MATVEYEV, Ye.P., retsenzent; ALEKSEYEV, I.M., retsenzent; DUDINSKIY, S.L., retsenzent(Leningrad); BABUN, V.B., kand. tekhn. nauk, retsenzent(Khar'kov); CHERNOV, N.V., prof., doktor tekhn. nauk, spets. red.; BORISOVA, G.A., red.; GROMOV, A.S., tekhn. red.

[Introduction to a knowledge of manufactured goods]Vvedenie v tovarovedenie promyshlennykh tovarov. Izd.2., dop. i perer. Moskva, Gostorgizdat, 1962. 142 p. (MIRA 16:1)
(Commercial products)

APPROVED FOR RELEASE: 08/23/2000 CIA-RDP86-00513R001549010016-4"

"APPROVED FOR RELEASE: 08/23/2000 CIA-RDP86-00513R001549010016-4

SHEKLAKOV, N.D.

Mycoses in the Kamchatka region. Vest. vener., Moskva No.1:52-53 Jan-Feb 52. (CIML 21:4)

1. Of the Central Skin-Venereological Institute.

APPROVED FOR RELEASE: 08/23/2000 CIA-RDP86-00513R001549010016-4"

"APPROVED FOR RELEASE: 08/23/2000 CIA-RDP86-00513R001549010016-4

SHEKLAKOV, N.D., ordinator; MASHKILLEYSON, L.N., professor, zaveduyushchiy; TURANOV, N.M., kandidat meditsinskikh nauk, direktor.

Flat superficial non-ulcerative basal cell tumors of the skin. Vest.ven.i derm. no.2:52-53 Mr-Ap '53. (MLRA 6:5)

1. Otdel dermatologii Tsentral'nogo kozhno-venerologicheskogo instituta Ministerstva zdravookhraneniya SSSR (for Sheklakov, Mashkilleyson). 2. Tsentral'nyy kozhno-venerologicheskiy institut Ministerstva zdravookhraneniya SSSR (for Turanov).
(Skin--Tumors)

APPROVED FOR RELEASE: 08/23/2000 CIA-RDP86-00513R001549010016-4"

"APPROVED FOR RELEASE: 08/23/2000 CIA-RDP86-00513R001549010016-4

USSR/Medicine - Staphylococcal Anatoxin Sep/Oct 53

"Results of Treatment of Patients With Suppurative Infections of the Skin by Means of Staphylococcal Anatoxin (A_2)," N. D. Sheklakov, Clinic of Skin and Venereal Diseases, Moscow Oblast Sci-Res Clinical Inst im M. F. Vladimirskiy

Vest Vener i Derm, No 5, pp 15-17

Staphylococcal anatoxin (A_2) is a new biological consisting of 3 protein fractions. A_2 exerted strong immunogenic action and prevented relapses in

270T64

50 cases of infections caused by staphylococci. Intramuscular injection of A_2 in the deltoid muscle area and local application of ichthyol are recommended for the treatment of furuncles, hidradenitis, and pyoderma. No definite opinion can as yet be formed concerning the effectiveness of A_2 in the treatment of suppurative diseases of the skin.

270T64

APPROVED FOR RELEASE: 08/23/2000 CIA-RDP86-00513R001549010016-4"

"APPROVED FOR RELEASE: 08/23/2000 CIA-RDP86-00513R001549010016-4

SHEKLAKOV, N.D. (Moscow).

Treatment and prevention of suppurative diseases. Fel'd.i akush. no.12:22-28 D '53. (MLRA 6:12)
(Suppuration)

APPROVED FOR RELEASE: 08/23/2000 CIA-RDP86-00513R001549010016-4"

"APPROVED FOR RELEASE: 08/23/2000 CIA-RDP86-00513R001549010016-4

SHEKLAKOV, N.D. (Moscow)

Herpes. Fel'd.i akush. no.4:19-21 Ap '54. (MLRA 7:4)
(Herpes)

APPROVED FOR RELEASE: 08/23/2000 CIA-RDP86-00513R001549010016-4"

"APPROVED FOR RELEASE: 08/23/2000 CIA-RDP86-00513R001549010016-4

SHEKLAKOV, N. D.

SHEKLAKOV, N. D.: "The treatment and prophylaxis of suppurative diseases of the skin, using a preparation of staphylococcus anatoxin A_2". Moscow, 1955. Ivanovo State Medical Inst. (Dissertations for the Degree of Candidate of Medical Sciences)

SO: Knizhnaya letopis', No. 52, 24 December, 1955. Moscow.

APPROVED FOR RELEASE: 08/23/2000 CIA-RDP86-00513R001549010016-4"

"APPROVED FOR RELEASE: 08/23/2000 CIA-RDP86-00513R001549010016-4

SHEKLAKOV, N.D., assistent

Diagnosis of pemphigus of the oral mucosa. Stomatologiia 38 no.3:3-5 My-Je '59. (MIRA 12:8)

1. Iz kafedry kozhnykh i venericheskikh bolezney (zav. - prof. B.M.Pashkov) Moskovskogo meditsinskogo stomatologicheskogo instituta (dir. - dotsent G.N.Beletskiy).
(PEMPHIGUS) (MOUTH--DISEASES)

APPROVED FOR RELEASE: 08/23/2000 CIA-RDP86-00513R001549010016-4"

"APPROVED FOR RELEASE: 08/23/2000 CIA-RDP86-00513R001549010016-4

SHEKLAKOV, N.D.

Phasic characteristics of pemphigus and the evaluation of cytological examination. Vest. derm. i ven. 34 no.4:21-25 '60. (MIRA 13:12)
(PEUMPHIGUS)

APPROVED FOR RELEASE: 08/23/2000 CIA-RDP86-00513R001549010016-4"

"APPROVED FOR RELEASE: 08/23/2000 CIA-RDP86-00513R001549010016-4

SHEKLAKOV, Nikolay Dmitriyevich, kand. med. nauk; ASTVATSATUROV, K.N., red.; ~~MOLAKOVA~~, Z.A., tekhn. red.

[Pemphigus] Puzyrchatka. Moskva, Medgiz, 1961. 162 p. (MIRA 15:3)

(PEMPHIGUS)

APPROVED FOR RELEASE: 08/23/2000 CIA-RDP86-00513R001549010016-4"

"APPROVED FOR RELEASE: 08/23/2000 CIA-RDP86-00513R001549010016-4

PASHKOV, B.M., prof.; SHEKLAKOV, N.D., kand.med.nauk

Benign nonacantholytic pemphigus solely of the oral mucosa. Stomatologiia 40 no.3:18-20 My-Je '61. (MIRA 14:12)

1. Iz kafedry kozhnykh i venericheskikh bolezney (zav. - prof. B.M. Pashkov) Moskovskogo meditsinskogo stomatologicheskogo instituta (dir. - dotsent G.N.Beletskiy).
(PEMPHIGUS) (MUCOUS MEMBRANE--DISEASES)

APPROVED FOR RELEASE: 08/23/2000 CIA-RDP86-00513R001549010016-4"

"APPROVED FOR RELEASE: 08/23/2000 CIA-RDP86-00513R001549010016-4

SHEKLAKOV, N.D.

PASZKOW, B.M.; SZEKLAKOW, N.D.

Benign non-acantholytic pemphigus exclusively of the oral mucosa. Przegl. derm. 49:29-32 '62.

1. Z Moskiewskiego Medycznego Instytutu Stomatologicznego Dyrektor: doc. G.N. Bieleckij Z Kliniki Chorob Skornych i Wenerycznych Kierownik: prof. B.M. Paszkow.
(PEMPHIGUS) (MOUTH)

Moscow Med. Stomatological Inst

APPROVED FOR RELEASE: 08/23/2000 CIA-RDP86-00513R001549010016-4"

"APPROVED FOR RELEASE: 08/23/2000 CIA-RDP86-00513R001549010016-4

SHEKLAKOV, N.D., kand.med.nauk (Moskva)

Diagnosis and treatment of pemphigus. Med.sestra 21 no.9:8-13 S '62. (MIRA 15:9)

(PEMPHIGUS)

APPROVED FOR RELEASE: 08/23/2000 CIA-RDP86-00513R001549010016-4"

"APPROVED FOR RELEASE: 08/23/2000 CIA-RDP86-00513R001549010016-4

SHEKLAKOV, N.D., kand. med. nauk

Errors and difficulties in the diagnosis of pemphigus.
Sov. Med. 26 no.9:108-112 S '62. (MIRA 17:2)

1. Iz kafedry kozhnykh i venericheskikh bolezney (zav. - prof. B.M. Pashkov) Moskovskogo meditsinskogo stomatologicheskogo instituta (rektor - dotsent G.N. Beletskiy).

APPROVED FOR RELEASE: 08/23/2000 CIA-RDP86-00513R001549010016-4"

"APPROVED FOR RELEASE: 08/23/2000 CIA-RDP86-00513R001549010016-4

APPROVED FOR RELEASE: 08/23/2000 CIA-RDP86-00513R001549010016-4"

"APPROVED FOR RELEASE: 08/23/2000 CIA-RDP86-00513R001549010016-4

SHEKLAKOV, N.D., dotsent

Permanently running variations in multiforme exudative erythema. Vest. derm. i ven. 38 no.4:31-35 Ap '64. (MIRA 18:4)

1. Kafedra koshnykh i venericheskikh bolezney (zav. - prof. B.M. Pashkov) Moskovskogo meditsinskogo stomatologicheskogo instituta.

APPROVED FOR RELEASE: 08/23/2000 CIA-RDP86-00513R001549010016-4"

"APPROVED FOR RELEASE: 08/23/2000 CIA-RDP86-00513R001549010016-4

[illegible]

Congenital syphilis in a mother and daughter. [illegible]

1. Kafedra kozhnykh i venericheskikh bolezney (zav. - prof. B.M. [illegible]) Moskovskogo meditsinskogo stomatologicheskogo instituta.

APPROVED FOR RELEASE: 08/23/2000 CIA-RDP86-00513R001549010016-4"

"APPROVED FOR RELEASE: 08/23/2000 CIA-RDP86-00513R001549010016-4

[illegible], [illegible], [illegible]

Symposium of [illegible] exploration. [illegible] vem. no.3:38-4[illegible] 195[illegible]. [illegible]

1. Kafedra [illegible] i [illegible] ob botaniki (zav. [illegible] B.M. Pashkov) Moskovskogo [illegible] institute.

APPROVED FOR RELEASE: 08/23/2000 CIA-RDP86-00513R001549010016-4"

"APPROVED FOR RELEASE: 08/23/2000 CIA-RDP86-00513R001549010016-4

EXCERPTA MEDICA Sec 6 Vol 13/3 Internal Med. Mar 59

1718. DIAGNOSTIC VALUE OF CYTOLOGICAL INVESTIGATIONS IN BULLOUS AND VESICULAR LESIONS OF THE ORAL CAVITY (Russian text) - Shek-lakov N. L. - SOV. MED. 1958, 22/4 (30-36) Tables 1

Diagnosis can be facilitated by cytologic demonstration of acantholysis in smears of the epithelium of the mouth. (VI, 5)

APPROVED FOR RELEASE: 08/23/2000 CIA-RDP86-00513R001549010016-4"

"APPROVED FOR RELEASE: 08/23/2000 CIA-RDP86-00513R001549010016-4

BLUDOVA, N.M., VATOLINA, V.M., SHEKLAKOVA, A.A.

Result of detection of chronic trichophytosis and farus in adults in a mycological outpatient department. Vest.derm. i ven. 32 no. 5:67-69 S-O '58 (MIRA 11:11)

1. Iz mikologicheskogo otdela (zav. - prof. A.M. Ariyevich) TSentral'nogo kozhno-venerologicheskogo instituta i klinicheskoy kozhno-venerologicheskoy bol'nitsy im. Korolenko (glavnyy vrach - zasluzhennyy vrach RSFSR V.P. Nikolayev).

(RINGWORM, epidemiol.
favus & ringworm in adults in Russia (Rus))

APPROVED FOR RELEASE: 08/23/2000 CIA-RDP86-00513R001549010016-4"

"APPROVED FOR RELEASE: 08/23/2000 CIA-RDP86-00513R001549010016-4

ARIYEVICH, A.M.; VIKHREVA, O.G.; TYUFILINA, O.V.; LIVANOVA, N.K.; SHEKLAKOVA, A.A.; VATOLINA, V.M.; BLUDOVA, N.M.

Griseofulvin in the treatment of dermatomycoses. Antibiotiki 9 no.5:457-461 My '64. (MIRA 18:2)

1. Mikologicheskiy otdel (zav.- prof. A.M. Ariyevich) TSentral'nogo nauchno-issledovatel'skogo kozhno-venerologicheskogo instituta, Moskva.

APPROVED FOR RELEASE: 08/23/2000 CIA-RDP86-00513R001549010016-4"

"APPROVED FOR RELEASE: 08/23/2000 CIA-RDP86-00513R001549010016-4

USSR/Metals Nov 1947

Manganese - Ore Deposits
Mines and Mining

"The Chiyaturskiy Manganese Deposits Under the Soviet Regime," Sh. S. Sheklashvili, M. M. Bregvadze, 2½ pp

"Gornyy Zhurnal" No 11

A brief description of the discovery of the Chiyaturskiy deposits, the methods of working them, transportation from the workings, method of transporting the ore to loading platforms, dressing, and present construction. Discusses these operations at the Shukrutskiy, Itkhvisskiy, and Kalaura deposits.

24270

APPROVED FOR RELEASE: 08/23/2000 CIA-RDP86-00513R001549010016-4"

"APPROVED FOR RELEASE: 08/23/2000 CIA-RDP86-00513R001549010016-4

127-11-4/12

AUTHORS: Sheklashvili, Sh.S. and Kontorovich, G.I., Mining Engineers

TITLE: Chiatura Manganese (Chiaturskiy marganets)

PERIODICAL: Gornyy Zhurnal, 1957, # 11, p 17 (USSR)

ABSTRACT: In 1947, the first section of the Central Concentration Plant in Chiatura was put into operation. At the present time, construction of the second section of this plant is nearing completion. The total capacity of this plant is 400 tons of initial ore per hour. By 1955, the extraction of manganese from the ores in the Chiatura Concentration Plant reached 80%. In 1956, the construction of a plant for tails flotation was begun.
The article contains 3 photos.

AVAILABLE: Library of Congress

Card 1/1

APPROVED FOR RELEASE: 08/23/2000 CIA-RDP86-00513R001549010016-4"

"APPROVED FOR RELEASE: 08/23/2000 CIA-RDP86-00513R001549010016-4

S/207/62/000/006/007/025
E075/E135

AUTHORS: Popov, V.A., and Sheklein, A.V. (Moscow)

TITLE: Distribution of the relative intensities of the radiations of radicals in laminar methane-air flame

PERIODICAL: Zhurnal prikladnoy mekhaniki i tekhnicheskoy fiziki, no.6, 1962, 35-38

TEXT: The distribution was investigated for C_2 and CH radicals in the flames of different compositions under atmospheric and low pressures. Quantitative measurements were carried out for the CH absorption band at 4312 Å and the C_2 band at 5165 Å. The relative radiation intensity of a radical in a given portion of the flame front was determined from the spectra, the registered signal being a combination of the radiation due to the radical and background radiation at a given frequency. Half-widths of the radiation zones (i.e. the zone extending from the maximum radiation intensity to half of this value) were determined from the curves of the distribution of radiation across the flame front. For all the radicals the plots of the half-widths against the

Card 1/2

APPROVED FOR RELEASE: 08/23/2000 CIA-RDP86-00513R001549010016-4"

"APPROVED FOR RELEASE: 08/23/2000 CIA-RDP86-00513R001549010016-4

Distribution of the relative ... S/207/62/000/006/007/025
E075/E135

flame composition indicated that the zone was the narrowest for stoichiometric flame mixtures. The half-widths increased sharply with decreasing pressure. This was accompanied by increasing thickness of the visible flame front. The results obtained are complex and are not interpreted; more detailed experiments will have to be carried out.
There are 7 figures and 1 table.

SUBMITTED: July 16, 1962

Card 2/2

APPROVED FOR RELEASE: 08/23/2000 CIA-RDP86-00513R001549010016-4"

"APPROVED FOR RELEASE: 08/23/2000 CIA-RDP86-00513R001549010016-4

SHEKLEIN, A.V.; POPOV, V.A.

Use of a xenone flashlamp as base of ultraviolet ray source in quantitative flame spectrum analysis with photographic spectrum recording. Zhur. nauch. i prikl. fot. i kin. 9 no.3:192-197 My-Je '64. (MIRA 18:11)

1. Energeticheskiy institut imeni Krzhizhanovskogo. Submitted June 28, 1963.

APPROVED FOR RELEASE: 08/23/2000 CIA-RDP86-00513R001549010016-4"

"APPROVED FOR RELEASE: 08/23/2000 CIA-RDP86-00513R001549010016-4

SHUKLEIN, A.V.; YEGOROVA, T.V.

Photographic apparatus and supplies for operations on the Moon. Zhur.nauch. i prikl.fot. i kin. 9 no.6:470-472 N-D '64. (MIRA 18:1)

APPROVED FOR RELEASE: 08/23/2000 CIA-RDP86-00513R001549010016-4"

"APPROVED FOR RELEASE: 08/23/2000 CIA-RDP86-00513R001549010016-4

ACC NR: AP5026029 SOURCE CODE: UR/0405/65/000/001/0076/0079

AUTHOR: Popov, V. A. (Moscow); Sheklein, A. V. (Moscow)

ORG: None

TITLE: Spectroscopic investigation of a plane methane-air flame in an electric field

SOURCE: Nauchno-tekhnicheskiye problemy goreniya i vzryva, no. 1, 1965, 76-79

TOPIC TAGS: air, methane, electric field, flame, flame photometry, combustion mechanism, gas spectroscopy

ABSTRACT: This is a continuation of an earlier layer-by-layer spectroscopic study of C_2 and CH radical radiations within a methane-air flame. Theoretical investigations of the chemical reaction in electric and magnetic fields indicated the possibility that the reaction equilibria may be shifted and that the yield of the final products may be altered. The present authors studied the influence of a longitudinal electric field on the redistribution of the emitting particles within the combustion front. Measurements were carried out at atmospheric pressure on C_2 (5165 A) and CH (4312 A) radicals. The burner, 80 mm in diameter, was mounted on a 100 kv insulator as shown in Fig. 1. Tests were carried out using nine different high voltage connections. All the resulting macroscopic changes and perturbations in the combustion zone can be fully explained by gas-dynamic considerations ("electric wind") in agreement with

Card 1/2

APPROVED FOR RELEASE: 08/23/2000 CIA-RDP86-00513R001549010016-4"

"APPROVED FOR RELEASE: 08/23/2000 CIA-RDP86-00513R001549010016-4

L 8079-66

ACC NR: AP5026029

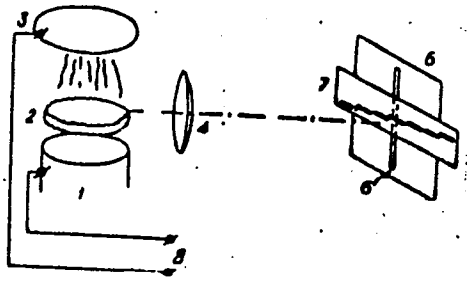

Fig. 1 Optical diagram of the spectroscopic investigation of the plane front of a methane-air flame within an electric field.

1 - burner - first electrode; 2 - flame front plane; 3 - stabilizer - second electrode; 4 - Yupiter-3 projecting objective, 1:1.5, f = 50 mm; 5 - plane of the flame front image; 6 - entrance slit of the ISP-51 spectrograph; 7 - Hartman diaphragm with horizontal slits; 8 - clamps connected to a Tesla rectifier

the views of B. Lewis and G. von Elbe (Combustion, Flames and Explosions of Gases, 2nd Edition, Academic Press, ch. IX, New York-London, 1961. This is true up to the 5 kv/cm field above which value the breakdown begins. Orig. art. has: 1 figure.

SUB CODE: FP, ME / SUBM DATE: 02Nov64 / ORIG REF: 009 / OTH REF: 005

Card 2/2

APPROVED FOR RELEASE: 08/23/2000 CIA-RDP86-00513R001549010016-4"

"APPROVED FOR RELEASE: 08/23/2000 CIA-RDP86-00513R001549010016-4

L 36349-66 EWT(m)/EWP(j)/T IJP(c) RM/WW
ACC NR: AP6017961 (A) SOURCE CODE: UR/0377/65/000/006/0019/0024

AUTHOR: Alikhodzhayeva, M. A.; Gudkov, L. V.; Sheklein, A. V.

ORG: State Scientific Research Power Engineering Institute im. G. M. Krzhizhanovskiy (Gosudarstvennyy n.-i. energeticheskiy institut)

TITLE: Concerning selective coating of receivers for radiant energy from the sun

SOURCE: Geliotekhnika, no. y, 1965, 19-24

TOPIC TAGS: solar furnace, solar power plant, paint, solar radiation absorption/ KhS 77 enamel, DM nitro dye

ABSTRACT: The purpose of the investigation was to find a more universal paint for solar radiation receivers, such as would absorb the incident radiation in the spectral range which produces low effective heating and would have a minimum emission in the region of the intrinsic thermal radiation of the receiver. Tests made on various Soviet enamels found that the most satisfactory results were obtained with the natural-drying enamel "KhS-77" which is a solution of the copolymer of vinyl chloride and vinylidene chloride mixed with volatile organic solvents, pigment, and filler. The coefficient of absorption and the degree of blackness of this enamel are compared with the nitro dye DM and the advantages of the former are demonstrated. A procedure for coating the solar radiation receiver with this enamel and calculating the heat loss in a water boiler treated with this enamel are presented. Plots of the heat loss of such a boiler with variation of temperature are presented. Orig. art. has: 3 figures, 3 formulas, and 2 tables.

SUB CODE: 03,13/ SUBM DATE: 27Sep65/ ORIG REF: 004

Card 1/1

APPROVED FOR RELEASE: 08/23/2000 CIA-RDP86-00513R001549010016-4"

"APPROVED FOR RELEASE: 08/23/2000 CIA-RDP86-00513R001549010016-4

L 00179-67 EWT(1)/EWT(m)/T IJP(c) DS/WW/AT

ACC NR: AP6018091 (A) SOURCE CODE: UR/0377/65/000/005/0051/0052

51
50
B

AUTHOR: Sheklein, A. V.

ORG: State n.-i. Power Engineering Institute im. G. M. Krzhizhanovskiy (Gosudarstvennyy n.-i. energeticheskiy institut)

TITLE: Pulse lamp as a high intensity optical source for work in heliotechnics

SOURCE: Geliotekhnika, no. 5, 1965, 51-52

TOPIC TAGS: pulsed illumination, high temperature plasma, light source, optic pyrometer, solar energy conversion, solar furnace, chemical kinetics, UV spectrum

ABSTRACT: The uses of xenon-filled quartz lamps of the IFK and ISSh type are described. These lamps are powerful, stable, and easy to use; they are especially useful in the study of high temperature solar furnaces. These sources are also used as generators of background radiation in the study of UV and visible absorption spectra of high temperature plasma, as comparison sources in the optical measurement of temperatures and as light sources for quantitative spectroscopic measurements. The author notes the following advantages of the pulsed low-inertia gas-filled lamp: 1) high-energy brightness several orders of magnitude higher (especially in the UV region) than that of the most powerful hydrogen lamp; 2) high-temperature brightness up to 15,000 °K in the region 5500 Å); 3) continuous spectral composition; 4) small total energy

Card 1/2

APPROVED FOR RELEASE: 08/23/2000 CIA-RDP86-00513R001549010016-4"

"APPROVED FOR RELEASE: 08/23/2000 CIA-RDP86-00513R001549010016-4

L 00179-67

ACC NR: AP6018091

requirement, simplicity of power supply, convenience of use, and safety and dependability of operation. The author concludes that the essential advantage of the most advanced source, the IFK-2000, is its extremely short duration (10^{-3} second) of flash, permitting its application to the study of high speed physical processes in chemical kinetics and solar furnaces.

SUB CODE: 20,13,10/ SUBM DATE: 01Oct65/ ORIG REF: 003/ OTH REF: 001

Card 2/2 mjs

APPROVED FOR RELEASE: 08/23/2000 CIA-RDP86-00513R001549010016-4"

"APPROVED FOR RELEASE: 08/23/2000 CIA-RDP86-00513R001549010016-4

ACC NR: AP6035252 (A) SOURCE CODE: UR/0377/66/000/004/0057/0063

AUTHOR: Sheklein, A. V.; Rekant, N. B.; Zhukovskaya, Ye. A.; Yurkova, S. V.; Baulina, M. A.;

ORG: State Scientific Research Institute of Energy im. G. M. Krzhizhanovskiy (Gosudarstvennyy nauchno-issledovatel'skiy energeticheskiy institut)

TITLE: Optical characteristics of electroconductive glasses coated with a tin-oxide film

SOURCE: Geliotekhnika, no. 4, 1966, 57-63

TOPIC TAGS: glass, electroconductive glass, tin oxide film, electroconductive film

ABSTRACT: Results of an investigation of the transmission, light reflection, and emission coefficients of industrial and laboratory glass samples coated with electroconductive tin-oxide film are given. The values were analyzed for the ground-level solar spectrum range (0.3—2.5 mμ) and the spectral range corresponding to the thermal radiation (4—20 mμ) of radiant energy receivers

Card 1/2

APPROVED FOR RELEASE: 08/23/2000 CIA-RDP86-00513R001549010016-4"

"APPROVED FOR RELEASE: 08/23/2000 CIA-RDP86-00513R001549010016-4

ACC NR: AP6035252

not provided with concentrators. Technological conditions are described for coating the glass with the electroconductive film and the composition is given for some additives for improving the optical parameters. An empirical relation of electric conductivity, measured during the technological process, with the optical characteristics is shown. Orig. art. has: 5 figures and 2 tables. [Based on authors' abstract] [NT]

SUB CODE: 11, 20/SUBM DATE: none/ORIG REF: 005/OTH REF: 001/

Card 2/2

APPROVED FOR RELEASE: 08/23/2000 CIA-RDP86-00513R001549010016-4"

"APPROVED FOR RELEASE: 08/23/2000 CIA-RDP86-00513R001549010016-4

L 15730-66 EWT(m)/T/EWP(t)/EWP(b) IJP(c) JD/JG

ACC NR: AP6000890 SOURCE CODE: UR/0181/65/007/012/3685/3685

AUTHORS: Antipin, A. A.; Kurkin, I. N.; Potvorova, L. Z.; Shekun, L. Ya.

ORG: Kazan' State University im. V. I. Ul'yanov-Lenin (Kazanskiy gosudarstvenny universitet)

53

B

TITLE: Observation of paramagnetic resonance of Dy^{3+} ions in single crystal $CaWO_4$

SOURCE: Fizika tverdogo tela, v. 7, no. 12, 1965, 3685

TOPIC TAGS: dysprosium, line broadening, epr spectrum, Stark effect, paramagnetic ion, single crystal

ABSTRACT: The authors observe paramagnetic resonance of Dy^{3+} in a single crystal $CaWO_4$ grown by the Czochralski method and containing nominally one per cent of Dy. At ~ 3 Oc and 4.2K, the EPR spectrum contains predominantly of one broad intense line, accompanied by the hyperfine structure of Dy^{161} and Dy^{163}. Its intensity increases when

Card 1/2

APPROVED FOR RELEASE: 08/23/2000 CIA-RDP86-00513R001549010016-4"

"APPROVED FOR RELEASE: 08/23/2000 CIA-RDP86-00513R001549010016-4

L 15730-66
ACC NR: AP6000890

the temperature is reduced to 1.6K so that this line can be attributed to the ground state doublet of the Stark structure of the $^6H_{15/2}$ level. The line position can be described by the usual axial spin Hamiltonian with S = 1/2, for which the constants are given. Increasing the frequency to 10 Gc not only broadens the already existing lines but leads to the appearance of new lines, some of which decrease in intensity on cooling to 1.6K. Additional research is necessary to explain these features of the spectrum. Orig. art. has: 1 formula.

SUB CODE: 07 / SUBM DATE: 10Jul65/ ORIG REF: 001/

Card 2/2

APPROVED FOR RELEASE: 08/23/2000 CIA-RDP86-00513R001549010016-4"

"APPROVED FOR RELEASE: 08/23/2000 CIA-RDP86-00513R001549010016-4

[illegible], [illegible]

[illegible], [illegible] and [illegible], [illegible] electron microscopic structure of [illegible] precipitates from solutions. [illegible] 205.

SO: Bulletin of the U.S.S.R. Academy of Sciences (Chemistry Series) Izvestia Akad. Nauk, S.S.S.R., No. [illegible], 1948.

APPROVED FOR RELEASE: 08/23/2000 CIA-RDP86-00513R001549010016-4"

"APPROVED FOR RELEASE: 08/23/2000 CIA-RDP86-00513R001549010016-4

SHMK, A.I., Cand Geo-Min Sci — (diss) "Basic problems of the engineering-geological evaluation of the sliding slopes of the Southern Crimean coast. (On the example of the area of the city of Gurzuf)." Kos, 1958. 16 pp (Min of Higher Education USSR. Nor Geol Survey Inst im Ordzhonikidze). 120 copies (KL, 20-58, 94)

APPROVED FOR RELEASE: 08/23/2000 CIA-RDP86-00513R001549010016-4"

"APPROVED FOR RELEASE: 08/23/2000 CIA-RDP86-00513R001549010016-4

SHEKO, A.I., kand.geol.-miner.nauk; KRUPKIN, L.V., inzh.

Wall stability of Lebedi open-pit mines in the Kursk Magnetic Anomaly. Shakht.stroi. 4 no.2:7-10 F '60. (MIRA 13:5)

1. Laboratoriya gidrogeologicheskikh problem AN SSSR (for Sheko).
2. Filial Instituta gornogo dela AN SSSR, g. Gubkin (for Krupkin).
(Lebedi (Belgorodskaya Province)--Strip mining)

APPROVED FOR RELEASE: 08/23/2000 CIA-RDP86-00513R001549010016-4"

"APPROVED FOR RELEASE: 08/23/2000 CIA-RDP86-00513R001549010016-4

SHEKO, A.I.

Some general characteristics of the development of sliding slopes of mountainous seashores of the Crimea and Caucasus. Biul. MOIP. Otd.geol. 37 no.4:145 Jl-Ag '62. (MIRA 16:5)
(Russia—Southern—Landslides)
(Russia, Southern—Slopes (Physical geography))

APPROVED FOR RELEASE: 08/23/2000 CIA-RDP86-00513R001549010016-4"

"APPROVED FOR RELEASE: 08/23/2000 CIA-RDP86-00513R001549010016-4

SHERONALOVA, Valentina I., LEBEDEV, V. P. and KOROSEV, Nikolay I.

"Anwendung verdunnter Adsorptionskatalysatoren in der Chemischen Industrie." Chemische Technik, May 1958.

APPROVED FOR RELEASE: 08/23/2000 CIA-RDP86-00513R001549010016-4"

"APPROVED FOR RELEASE: 08/23/2000 CIA-RDP86-00513R001549010016-4

SHEKOLDIN, N. G.

CA

Striking surface for matches. S. A. Anurov and N. G. S

Shekoldin. U.S.S.R. 69,207, Sept. 30, 1947. To a mixt. of P or P sulfides and powd. metals bonded by suitable substances are added oxidizing agents, such as permanganate, $KClO_3$, or MnO_2, and abrasives, such as B_4C or SiC.
M. Hosch

ASM-SLA METALLURGICAL LITERATURE CLASSIFICATION

APPROVED FOR RELEASE: 08/23/2000 CIA-RDP86-00513R001549010016-4"

"APPROVED FOR RELEASE: 08/23/2000 CIA-RDP86-00513R001549010016-4

SHAKOYAN, A.

For further improvement in the work of financial organs. Fin. SSSR 23 no.7:26-32 Jl '62. (MIRA 15:7)

1. Ministr finansov Armyanskoy SSR.
(Armenia--Finance)

APPROVED FOR RELEASE: 08/23/2000 CIA-RDP86-00513R001549010016-4"

"APPROVED FOR RELEASE: 08/23/2000 CIA-RDP86-00513R001549010016-4

SHEKOYAN, E.G.

Biological properties of avisual forms of typhoid bacilli. Izv. AN Arm. SSR. Biol. nauki 13 no.12:75-79 D '60. (MIRA 13:12)
(EBERTHELLA TYPHOSA)

APPROVED FOR RELEASE: 08/23/2000 CIA-RDP86-00513R001549010016-4"

"APPROVED FOR RELEASE: 08/23/2000 CIA-RDP86-00513R001549010016-4

SHEKOYAN, E. G., Cand Med Sci -- "Biological ~~characteristics~~ of local strains of typhoid bacteria." Yerevan, 1961. (Min of Health ArSSR. Yerevan Med Inst) (KL, 8-61, 266)

APPROVED FOR RELEASE: 08/23/2000 CIA-RDP86-00513R001549010016-4"

"APPROVED FOR RELEASE: 08/23/2000 CIA-RDP86-00513R001549010016-4

SHEKOYAN, L.A.

Carrying of cytopathogenic intestinal viruses in healthy children. Report No. 1: Incidence of carriers of cytopathogenic enteroviruses in healthy children. Vop. virus. 7 no. 1:102-107 Ja-F '61. (MIRA 14:4)

1. Institut poizucheniyu poliomiyelita AMN SSSR, Moskva. (VIRUSES)

APPROVED FOR RELEASE: 08/23/2000 CIA-RDP86-00513R001549010016-4"

"APPROVED FOR RELEASE: 08/23/2000 CIA-RDP86-00513R001549010016-4

SHEKOYAN, L.A.

The degree of distribution and dynamics of changes in the level of antibodies to certain types of ECHO and Coxackie viruses in healthy children. Dokl.AN SSSR 137 no.6:1452-1455 Ap '61. (MIRA 14:4)

1. Institut po izucheniyu poliomiyelita Akademii meditsinskikh nauk SSSR. Predstavleno akademikom V.N.Chernigovskim.
(Viruses) (Antigens and antibodies)

APPROVED FOR RELEASE: 08/23/2000 CIA-RDP86-00513R001549010016-4"

"APPROVED FOR RELEASE: 08/23/2000 CIA-RDP86-00513R001549010016-4

SHEKOYAN, L.A.

Healthy children as carriers of cytopathogenic intestinal viruses. Dokl.AN SSSR 138 no.1:219-222 My-Je '61. (MIRA 14:4)

1. Institut po izucheniyu poliomiyelita Akademii meditsinskikh nauk SSSR. Predstavleno akademikom V.N.Chernigovskim.
(INTESTINES--BACTERIOLOGY) (VIRUSES)
(CHILDREN--CARE AND HYGIENE)

APPROVED FOR RELEASE: 08/23/2000 CIA-RDP86-00513R001549010016-4"

"APPROVED FOR RELEASE: 08/23/2000 CIA-RDP86-00513R001549010016-4

ALEKSANDROV, A.; ATAMALYAN, E.; BYCHKOV, V.; DRUZHKOVA, L.; YELYUTINA, K.; ZAKHAROVA, L.; KOCHETOV, V.; RADYUKIN, M.; SPEKTORSKIY, V.; FEDOTKIN, I.; FOLIMONOV, L.; TSIMBULOV, G.; SHEKOYAN, R.; SHAGIN, M.

Letter to the editor. Neft.khoz. 33 no.6:92 D '55. (MIRA 9:3)
(Oil well drilling--Equipment and supplies)

APPROVED FOR RELEASE: 08/23/2000 CIA-RDP86-00513R001549010016-4"

"APPROVED FOR RELEASE: 08/23/2000 CIA-RDP86-00513R001549010016-4

USSR/Kinetics - Combustion. Explosions. Topochemistry. Catalysis. B-9

Abs Jour : Referat Zhur - Khimiya, No 6, 1957, 18605

Author : M.V. Darbinyan, S.G. Shekoyan.
Inst : Academy of Sciences of Armenian SSR.
Title : Possibility of Silico-Thermal Reduction of Magnesium from Magnesium Silicates.

Orig Pub : Izv. AN Arm.SSR, Fiz.-matem., yestestv. i tekhn. n., 1956, 9, No 4, 25-31.

Abstract : It was shown by computation that the endothermic nature of the reduction reaction of magnesium silicates by silicon reducing agents decreased in presence of CaO binding SiO_2. The reduction of Mg silicates was studied experimentally on serpentinite, dunite and peridotite (taken in amounts of 36.3 to 42.0%) reduced by silicon (6.5%) or ferrosilicon (8 to 8.8%) in presence of CaO (47.0 to 52.1%) and the catalyst CaF_2 (2.0 to 3.0%). The temperature rise from 1200 to 1300° and the arise of the reduction

Card 1/2

APPROVED FOR RELEASE: 08/23/2000 CIA-RDP86-00513R001549010016-4"

"APPROVED FOR RELEASE: 08/23/2000 CIA-RDP86-00513R001549010016-4

DARBINYAN, M.V.; SHEKOYAN, S.G.; POGOSYAN, R.U.

Investigation of the methods employed in the treatment of dolomites. Report No.3: Reaction of dolomite with gypsum carbonic acid. Izv.AN Arm.SSR Khim.nauki 13 no.1:17-24 '60. (MIRA 13:7)

1. Yerevanskiy gosudarstvennyy universitet, Kafedra analiticheskoy khimii.
(Dolomite) (Gypsum) (Carbon dioxide)

APPROVED FOR RELEASE: 08/23/2000 CIA-RDP86-00513R001549010016-4"

"APPROVED FOR RELEASE: 08/23/2000 CIA-RDP86-00513R001549010016-4

ACCESSION NR: AP4019089 S/0096/64/000/003/0078/0080

AUTHORS: Ratiani, G. V. (Candidate of technical sciences); Shekriladze, I. G. (Engineer)

TITLE: Experimental investigation of heat transfer relations during transition of film flow on a vertical plate from laminar to turbulent flow

SOURCE: Teploenergetika, no. 3, 1964, 78-80

TOPIC TAGS: film condensation, heat transfer

ABSTRACT: The heat transfer coefficient α during film condensation of steam on a vertical plate was measured experimentally for R_e = 10 - 150 (transition from purely laminar to turbulent flow has been observed by several authors at $\approx R_e$ = 23). It was found that the experimental α agreed well with the Nusselt equation for laminar flow to an $R_e \approx 25$, and then became higher than that predicted by Nusselt (see Fig. 1 on the Enclosure). The experimental data agreed well with the relation $\varepsilon_t^{-1} Re_n = 3{,}8 z_n^{0.78}$, presented by D. A. Labuntsov ("Teploenergetika" No. 7, 1757). The heat transfer coefficient was measured by condensing slightly

Card 1/3

APPROVED FOR RELEASE: 08/23/2000 CIA-RDP86-00513R001549010016-4"

"APPROVED FOR RELEASE: 08/23/2000 CIA-RDP86-00513R001549010016-4

ACCESSION NR: AP4019089

superheated steam on a stainless steel tube 0.0215 m diameter by 0.217 m high, through which water at constant temperature was circulated. The heat transfer was obtained by weighing the amounts of the condensate and the steam. Wall temperatures were measured with thermocouples. Orig. art. has: 2 formulas, 3 figures, and 1 table.

ASSOCIATION: Laboratoriya teploobmena i goreniya instituta energetiki Akademii nauk Gruz. SSR (Laboratory of Heat Transfer and Combustion of the Power Engineering Institute Academy of Sciences Gruz. SSR)

SUBMITTED: 00 DATE ACQ: 26Mar64 ENCL: 01

SUB CODE: ME, TD NO REF SOV: 004 OTHER: 000

Card 2/3

APPROVED FOR RELEASE: 08/23/2000 CIA-RDP86-00513R001549010016-4"

"APPROVED FOR RELEASE: 08/23/2000 CIA-RDP86-00513R001549010016-4

ACCESSION NR: AP4019089 ENCLOSURE: 01

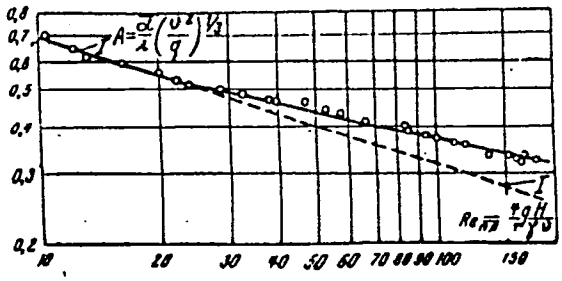

Fig. 1. $A = f(R_\theta)$

Card 3/3

APPROVED FOR RELEASE: 08/23/2000 CIA-RDP86-00513R001549010016-4"

"APPROVED FOR RELEASE: 08/23/2000 CIA-RDP86-00513R001549010016-4

L 10841-67 EWT(1) WW SOURCE CODE: UR/0251/66/042/001/0145/0150

ACC NR: AP6028030 50

AUTHORS: Shekriladze, I. G.; Ratiani, G. V.

ORG: Institute of Physics and Technology (Fiziko-tekhnicheskiy institut)

TITLE: The basic laws of heat transfer during boiling

SOURCE: AN GruzSSR. Soobshcheniya, v. 42, no. 1, 1966, 145-150

TOPIC TAGS: heat transfer, boiling, Nusselt number, Reynolds number

ABSTRACT: The authors contend that present views concerning the mechanism of heat transfer during boiling are imperfect. They conducted an experiment to observe the phenomenon of bubble formation. A rustproof foil was attached to a laminated Bakelite plate, placed in a glass beaker filled with benzene, and heated by passing direct current through it. The bubbles forming on the foil were observed. It was noted that at each bubble generated on the heating surface a fountain-like gushing movement of the heated liquid occurred, directed downward, clearly visible within the mass of cooler liquid (away from the plate). A "pump action" of the bubbles at the heating surface was thus established. The authors explain that after the heating surface passes the saturation temperature and reaches a certain value a bubble of steam is generated in a center of steam formation, in a cavity on the heating surface. At the instant immediately preceding generation of the bubble, overheating of the

Card 1/2

APPROVED FOR RELEASE: 08/23/2000 CIA-RDP86-00513R001549010016-4"

"APPROVED FOR RELEASE: 08/23/2000 CIA-RDP86-00513R001549010016-4

L 10811-67

ACC NR: AP6028030

heating surface reaches a maximum, but at the moment the bubble forms the "pump effect" appears and the temperature of the heating surface at this site declines. After the bubble is torn away, the "pump effect" ceases, and the temperature of the heating surface again begins to rise until conditions are reached for generation of a new bubble--and so on. Since the overheating necessary to produce bubbles depends on the geometry of the steam-producing center as well as on the physical properties of the liquid, the geometry of the heating surface to a large extent determines the intensity of heat transfer during bubble development. All surfaces consist of minute hollows and protuberances in about equal proportion. The average radius of the hollows is the principal characteristic affecting bubble generation. A minimal time may be defined within which a hollow that has given birth to a bubble cannot generate another (till the temperature again reaches a sufficient value). In view of this, the authors analyze the temperature field in the liquid and arrive at an expression for the Nusselt number in terms of the Reynolds number and the physical characteristics of the heating plate and of the liquid. This paper was presented by N. A. Landia, corresponding member of the Academy, on 05 November 1965. Orig. art. has: 1 figure and 10 formulas.

SUB CODE: 20/ SUBM DATE: 05Nov65/ ORIG REF: 011/ OTH REF: 001

Card 2/2

APPROVED FOR RELEASE: 08/23/2000 CIA-RDP86-00513R001549010016-4"

"APPROVED FOR RELEASE: 08/23/2000 CIA-RDP86-00513R001549010016-4

SHEKHLADZE, L.G.

Film condensation of moving steam. Soob. AN Gruz. SSR 35 no.3: 619-626 S '64. (MIRA 17:11)

1. Gruzinskiy institut energetiki, Tbilisi. Predstavleno chlenom-korrespondentom AN GruzSSR N.A. Landia.

APPROVED FOR RELEASE: 08/23/2000 CIA-RDP86-00513R001549010016-4"

"APPROVED FOR RELEASE: 08/23/2000 CIA-RDP86-00513R001549010016-4

L 00900-67 EWT(1)/EWP(m) WW

ACC NR: AP6020995 SOURCE CODE: UR/0251/66/041/002/0391/0398

42
B

AUTHOR: Shekriladze, I. G.

ORG: Physicotechnical Institute (Fiziko-tekhnicheskiy institut)

TITLE: Mechanism of bubbling evaporation

SOURCE: AN GruzSSR. Soobshcheniya, v. 41, no. 2, 1966, 391-398

TOPIC TAGS: nucleate boiling, hydrodynamic theory, evaporation

ABSTRACT: The author gives a brief theoretical outline of the nucleate boiling process showing the predominant part played by phase transformation on the surface of the nascent bubble at the heating wall in the hydrodyanmics of the boiling evaporation process. The results of this study are used as the basis for a new physical model of the process which explains basic experimental data. Discrepancies between previous theoretical explanations and experimental facts are reviewed. The phenomena which take place on the dividing surface between phases during nucleation and growth of the steam bubble on the heating surface are analyzed. Approximate formulas are given for determining the intensity of circulation currents generated in the liquid phase. It is shown that the volume of liquid flowing in currents generated by bubble formation during the time the bubble is located at the heating surface exceeds the volume of the bubble by approximately three orders of magnitude. The results indicate that heat dis-

Card 1/2

APPROVED FOR RELEASE: 08/23/2000 CIA-RDP86-00513R001549010016-4"

"APPROVED FOR RELEASE: 08/23/2000 CIA-RDP86-00513R001549010016-4

L 00900-67

ACC NR: AP6020995

sipation in the layer close to the wall is a basic factor in nucleate boiling. The cycle of nucleation, growth and detachment of the steam bubble is analyzed. A comparison of the theoretical results with the latest experimental data shows that the hydrodynamic forces generated during bubbling evaporation are greater than the forces of surface tension in the detached section of the bubble, and the diameter of this section is determined by the balance between lift and hydrodynamic forces. When the bubble reaches a certain size depending on local thermal conditions, lift is greater than holding forces and the bubble is torn free from the heating surface. The surface then begins heating again near the center of evaporation, conditions become favorable for nucleation of another bubble, etc. Orig. art. has: 2 figures, 10 formulas.

SUB CODE: 20/ SUBM DATE: 22Sep65/ ORIG REF: 005/ OTH REF: 11

awm

Card 2/2

APPROVED FOR RELEASE: 08/23/2000 CIA-RDP86-00513R001549010016-4"

"APPROVED FOR RELEASE: 08/23/2000 CIA-RDP86-00513R001549010016-4

L 34815-65 EWT(1)/EWA(h) Peb

ACCESSION NR: AP5007466 S/0286/65/000/004/0084/0084

AUTHORS: Chavchanidze, V. V.; Shekriladze, V. I.; Chkheidze, M. V.; Karumidze, G. V.; Georgadze, A. Kh.; Sharashidze, A. D.

23
B

TITLE: Random pulse sequence generator. Class 42, No. 168525

SOURCE: Byulleten' izobreteniy i tovarnykh znakov, no. 4, 1965, 84

TOPIC TAGS: pulse generator 25

ABSTRACT: This Author Certificate presents a random pulse sequence generator containing a noise generator, pulse shaper, and coincidence circuit. To extend the variation region of probability of pulse occurrence at the generator output and to control the probability, the generator contains a noise voltage limiter with an adjustable limiter threshold. The limiter output is connected through the pulse shaper to one input of the coincidence circuit (see Fig. 1 on the Enclosure). The coincidence circuit output is connected to a shaper-extender to exclude input pulses supplied through the shaper-extender to the other input of the coincidence circuit. Orig. art. has: 1 diagram.

ASSOCIATION: Institut kibernetiki, AN Gruzinskoy SSR (Cybernetics Institute, AN Georgian SSR)

Card 1/1

APPROVED FOR RELEASE: 08/23/2000 CIA-RDP86-00513R001549010016-4"

"APPROVED FOR RELEASE: 08/23/2000 CIA-RDP86-00513R001549010016-4

L 12267-63 EWT(1)/BDS AFFTC/ASD

S/271/63/000/004/002/045

AUTHOR: Shekriladze, V. I.

TITLE: A high-stability magnetic amplifier 25

51

PERIODICAL: Referativnyy zhurnal, Avtomatika, telemekhanika i vychislitel'naya tekhnika, no. 4, 1963, 9, abstract 4A52 (Khelsanuota mueiablobeksa da avtomatizatsiis sashualebata Tbilisis sametsniero-kvlevitt institutis shromebi; Tr. Tbilissk, n.-n. in-ta priborostr. i sredstv avtomatiz.; 1960, 2, 185-190; Georgian resume).

TEXT: The author discusses the layout, structural features and (in part) the adjustment problems of a magnetic high-stability amplifier. This amplifier is used for measuring purposes. The stability is within the limits of ± 0.1%, with voltage variation of ± 1.5%, with amplification coefficient for voltage 3,200. The amplifier is planned so as to secure maximal stability with small zero drift. The article shows the layout of the amplifier and gives an analysis of its characteristics. There are six illustrations and a bibliography of two items. P. M.

[Abstracter's note: Complete translation]

Card 1/1

APPROVED FOR RELEASE: 08/23/2000 CIA-RDP86-00513R001549010016-4"

"APPROVED FOR RELEASE: 08/23/2000 CIA-RDP86-00513R001549010016-4

S/194/61/000/012/039/097
D256/D303

9,2530

AUTHOR: Shekriladze, V. I.

TITLE: High-accuracy d.c. output magnetic amplifier

PERIODICAL: Referativnyy zhurnal, Avtomatika i radioelektronika, no. 12m 1961, 14, abstract 12V111 (Tr. Gruz. politekhn. in-t, 1961, no. 1 (72), 81-86)

TEXT: A high stability magnetic amplifier system is considered together with some problems of its construction and servicing. The magnetic amplifier consists of two differential cascade stages with a negative feedback. The separate steering windings of the 2nd stage present the load for each arm of the 1st stage, ensuring high efficiency in contrast with the disadvantageous low efficiency of the two-stage magnetic amplifiers with a common d.c. output. The load network of the 1st stage includes resistors placed to improve the linearity of both stages. The system of the 2nd stage is basically identical to that of the 1st stage except for the common output. By using special windings, thermo-compensation and taking other

Card 1/2

APPROVED FOR RELEASE: 08/23/2000 CIA-RDP86-00513R001549010016-4"

"APPROVED FOR RELEASE: 08/23/2000 CIA-RDP86-00513R001549010016-4

35293

S/637/61/000/000/006/008
D201/D301

P-2538 (1147)

AUTHOR: Shekriladze, V.I., Senior Engineer

TITLE: A high-precision magnetic amplifier

SOURCE: Konferentsiya po avtomaticheskomu kontrolyu i metodam elektricheskikh izmereniy. Novosibirsk, 1959. Trudy. Novosibirsk, 1961, 309 - 314

TEXT: The author considers the circuit, certain specific design peculiarities and loading problems of a high-precision magnetic amplifier. The accuracy of the amplifier is 0.2 %, the characteristic non-linearities of the order of 0.5 %. The amplifier has two stages, forming a differential circuit with negative feedback. The circuit is described in detail and illustrated diagrammatically. The amplifier data are as follows: Voltage gain - 1600; current gain - 32, power gain 5.1×10^4; max. input power 2.5×10^{-7} W, max. output power 12.8×10^{-3} W; input resistance - 100 ohms; output resistance - 5000 ohms; zero drift - 2.0×10^{-13} V; non-linearity 0.5 %, error - 0.2 %; steady state operation for the above accuracy

Card 1/2

APPROVED FOR RELEASE: 08/23/2000 CIA-RDP86-00513R001549010016-4"

"APPROVED FOR RELEASE: 08/23/2000 CIA-RDP86-00513R001549010016-4

A high-precision magnetic amplifier S/637/61/000/000/006/008
D201/D301

after 0.2 sec. There are 3 figures and 3 Soviet-bloc references.

ASSOCIATION: NII priborostroyeniya i svedstv avtomatizatsii SNKh, Tbilisi (Tbilisi Scientific Research Institute of Instruments and Automation Equipment, SNKh)

Card 2/2

APPROVED FOR RELEASE: 08/23/2000 CIA-RDP86-00513R001549010016-4"

"APPROVED FOR RELEASE: 08/23/2000 CIA-RDP86-00513R001549010016-4

S/0271/64/000/001/A009/A009

ACCESSION NR: AR4014681

SOURCE: RZh. Avtomatika, telemekhanika i vy*chislitel'naya tekhnika, 1964, no. 1, Abs. 1A61

AUTHOR: Shekriladze, V. I.

TITLE: Stabilization of the amplification factor an a magnetic amplifier

CITED SOURCE: Tr. In-ta kibernetiki. AN GruzSSR, v. 1, 1963, 117-125

TOPIC TAGS: magnetic amplifier, amplification factor, amplification stabilization, magnetic amplifier amplification

TRANSLATION: A high-resistance magnetic amplifier (MA) designed for feeding information from d-c sensors into a computer is examined. The MA has an accuracy of 0.2%, nonlinearity of 0.5%, voltage amplification of 1600, power amplification of 5.1×10^4, input resistance of 100 ohms, output resistance of 5,000 ohms, and null drift of 2.0×10^{-13} watt. The MA requires a regulated power supply (no worse than 1%) having a rated power output several times that of the MA. The MA has a follower-type feedback system whereby the input voltage continuously holds the output to a given degree of precision. Equations are given for a number of amplifier parameters. The basic amplifier circuit is given, showing the two amplification

Card 1/2

APPROVED FOR RELEASE: 08/23/2000 CIA-RDP86-00513R001549010016-4"

"APPROVED FOR RELEASE: 08/23/2000 CIA-RDP86-00513R001549010016-4

ACCESSION NR: AR4014681

stages, which are differential-type circuits, with negative feedback. Each arm of the first stage works into its own load, one of the control coils of the second stage, which thereby provides a higher efficiency. As compared with two-cycle amplifiers, the MA has a common d-c output. All of the resistors of the first stage are made of manganin. The selection of the semiconductor diodes was governed by minimum reverse current as well as by temperature and volt-ampere characteristics. The second stage is essentially the same as the first, and has a common output. The transient characteristic of the MA is given. Orig. art. has: 6 figs. and 7 refs.

T. P.

SUB CODE: GE ENCL: 00 DATE ACQ: 19Feb64

Card 2/2

APPROVED FOR RELEASE: 08/23/2000 CIA-RDP86-00513R001549010016-4"

"APPROVED FOR RELEASE: 08/23/2000 CIA-RDP86-00513R001549010016-4

L 47316-65 EEO-2/EWT(d)/EWP(1) Pg-4/Pk-4/Pl-4/Pq-4 IJP(c) GG/BB/GS

ACCESSION NR: AT5007876 S/0000/64/000/000/0029/0043

AUTHOR: Chkeidze, M. V.; Abesadze, T. B.; Melikadze, N. L.; Shekriladze, V. I. 51 B+1

TITLE: Voltage-to-code converter 16C

SOURCE: AN GruzSSR. Institute kibernetiki. Elementy kiberneticheskikh sistem (Elements of cybernetic systems). Tiflis, Izd-vo Metsniyereba, 1964, 29-43

TOPIC TAGS: code converter, fiber optics, optical computer component, analog to digital converter

ABSTRACT: This article discusses converters of low voltages into code. These converters use high precision electrical measuring devices with luminous dials which are replaced by special coding matrices, made of coherently organized optical fiber-glass. A more useful coding system is one employing a mirror coding reflector which controls a photoelectric pickup. The conversion of continuous values into discrete is a result of a combination of operations: quantization of continuous quantities in time, quantization of continuous quantities with respect to level, coding of the level, and if necessary scanning the parallel code in time. The converter makes use of a metering device which measures reflected light rays. This

Card 1/2

APPROVED FOR RELEASE: 08/23/2000 CIA-RDP86-00513R001549010016-4"

"APPROVED FOR RELEASE: 08/23/2000 CIA-RDP86-00513R001549010016-4

L 47316-65

ACCESSION NR: AT5007876

device takes its reading from the screen of the dial. If each element is connected to some register, which is not connected with other elements, there will be a separate signal for each variation in the input voltage. The design of the converters can be significantly simplified by using "fiber optics" in the conversion part of the device. Systems using fiber optics produce high resolution and eliminate halation. They give additional design possibilities, which are impossible with ordinary optics. When the converter with focusing mirror is compared with the one using fiber optics, it is found that the former is preferable. It is suggested that optical converters will be used widely in the future. Orig. art. has: 5 figures, 1 table.

ASSOCIATION: none

SUBMITTED: 07Jul64 ENCL: 00 SUB CODE: DP

NO REF SOV: 000 OTHER: 000

Card 2/2 mb

APPROVED FOR RELEASE: 08/23/2000 CIA-RDP86-00513R001549010016-4"

"APPROVED FOR RELEASE: 08/23/2000 CIA-RDP86-00513R001549010016-4

L 47315-65 EED-2/EWT(d)/EWP(1) Pg-4/Pq-4 IJP(c) BB/GG/GS

ACCESSION NR: AT5007877 S/0000/64/000/000/0045/0056

AUTHOR: Chkheidze, M. V.; Machavariani, G. A.; Manukyan, Yu. S. Shekriladze, V. I.

TITLE: Analog to digital converters 160

38
B+1

SOURCE: AN GruzSSR. Institut kibernetiki. Elementy kiberneticheskikh sistem (Elements of cybernetic systems). Tiflis, Izd-vo Metsniyereba, 1964, 45-56

TOPIC TAGS: analog to digital converter, computer component, code converter

ABSTRACT: This article describes a device for converting voltages into a proportional number of pulses. This is a simple transistorized converter. By the proper selection of temperature compensation circuits and transistors, an accuracy of 0.1 percent may be realized. The simplest methods and circuits for the conversion of voltage into code, of the sequential type, compare the voltage being converted with a voltage produced by certain storage elements. A circuit for such a converter in combination with a "filler" pulse generator is given in fig. 1 of the Enclosure. The use of a "plug-in" circuit in this type of converter makes it possible to obtain high frequencies without overloading the collector and emitter. In this case a

Card 1/4

APPROVED FOR RELEASE: 08/23/2000 CIA-RDP86-00513R001549010016-4"

"APPROVED FOR RELEASE: 08/23/2000 CIA-RDP86-00513R001549010016-4

L 47315-65

ACCESSION NR: AT5007877

quartz resonator is used as an ordinary high Q oscillation circuit. In this way the stability of the generator is increased. This conversion process is a combination of two processes: a) conversion of the amplitude of the input pulse into a time interval proportional to this amplitude; b) filling this interval with metering pulses produced by the generator, the number of which is proportional to the time interval. In order to avoid the effects of ambient temperature changes during the experiments, the converter was thermostatically controlled. When the temperature error of the converter was determined, it was possible to use a temperature compensating circuit. The final exact parameters of this converter determined by tests, are: 1. accuracy of conversion--up to 0.1 percent, depending upon the transistors used; 2. maximum speed of conversion--500 conversions per second; 3. maximum frequency of filler pulses--1 mc; 4. range of variation in the input voltage--+15 volts; 5. maximum permissible level of voltage being converted--30 volts; 6. minimum power consumed by the converter from the driver--$8 \cdot 10^3$ volts; 7. feed voltage into the emitter circuit of the linearity control transistor--1.2 volts; 8. collector voltage for the metering pulse generator--2.5 volts. Orig. art. has: 7 figures, 6 formulas.

Card 2/4

APPROVED FOR RELEASE: 08/23/2000 CIA-RDP86-00513R001549010016-4"

"APPROVED FOR RELEASE: 08/23/2000 CIA-RDP86-00513R001549010016-4

L 47315-65

ACCESSION NR: AT5027877

0

ASSOCIATION: none

SUBMITTED: 07Jul64 ENCL: 01 SUB CODE: EC, DP

NO REF SOV: 002 OTHER: 000

Card 3/4

APPROVED FOR RELEASE: 08/23/2000 CIA-RDP86-00513R001549010016-4"

"APPROVED FOR RELEASE: 08/23/2000 CIA-RDP86-00513R001549010016-4

L 47315-65

ACCESSION NR: AT5007877

ENCLOSURE: 01

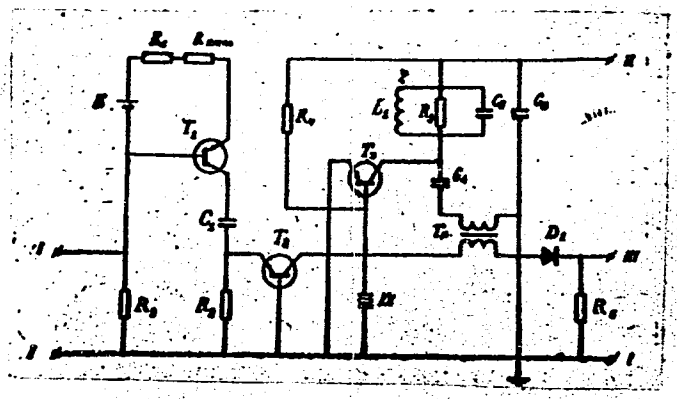

Fig. 1

Card 4/4

APPROVED FOR RELEASE: 08/23/2000 CIA-RDP86-00513R001549010016-4"

"APPROVED FOR RELEASE: 08/23/2000 CIA-RDP86-00513R001549010016-4

L 27074-66 EWT(d)/FSS-2 GS/JXT(CZ)

ACC NR: AT6012356 SOURCE CODE: UR/0000/66/000/000/0249/0252

AUTHOR: Abesadze, T. B.; Melikadze, N. L.; Chkheidze, M. V.; Shekriladze, V. I.

ORG: none

49

B+1

TITLE: High-current converter of low voltage levels into a code 9

SOURCE: Nauchno-tekhnicheskaya konferentsiya po sredstvam promyshlennoy telemekhaniki. Moscow, 1963. Promyshlennaya telemekhanika (Industrial telemechanics); materialy konferentsii. Moscow, Izd-vo Energiya, 1966, 249-252

TOPIC TAGS: coding, binary code, analog digital encoder, optic communication, fiber optics

ABSTRACT: In view of the sensitivity of low-voltage levels to extraneous noise and the concomitant need for the use of amplification in each individual channel, the authors have developed a converter in which the level is measured by a deflecting-beam instrument, and in which the beam deflection is converted into a digital signal by means of a light-sensitive instrument (Fig. 1). The accuracy of such a converter depends both on the accuracy of the meter employed and on the minimum distance which separates two neighboring light-sensitive elements. If several light-sensitive elements are installed at each scale division, and if these elements are suitably arranged in columns, it is possible to code the results of the conversion in accordance with a prescribed law. A standard meter with sensitivity of several millivolts per scale division can be used. If an electrodynamic meter is used, it is possible to obtain in discrete code the amplitude of sinusoidal oscillations at any instant of time,

Card 1/2

APPROVED FOR RELEASE: 08/23/2000 CIA-RDP86-00513R001549010016-4"

"APPROVED FOR RELEASE: 08/23/2000 CIA-RDP86-00513R001549010016-4

L 27074-66

ACC NR: AT6012356

something which cannot be done with any other converter without the use of a rectifier. The code mask is placed on the surface of the focusing member of the instrument, and the scale can be printed photographically. Methods of eliminating the scale nonlinearity have been developed. The use of fiber optics can improve the resolution and the accuracy. Different types of optical fibers, with length of 30 cm, were tried. Types FEU-27 and FEU-31 photomultipliers were tested, and the latter turned out to be more sensitive. A scale of 100 divisions (10 binary digits) with measurement accuracy 0.1% calls for the use of an optical mask of 0.136 x 0.6 mm area, and a maximum width of the light beam of 136 μ. The actual width chosen was 80 μ. A signal of the order of 0.5 volts was obtained in all digits. Orig. art. has: 1 figure. [02]

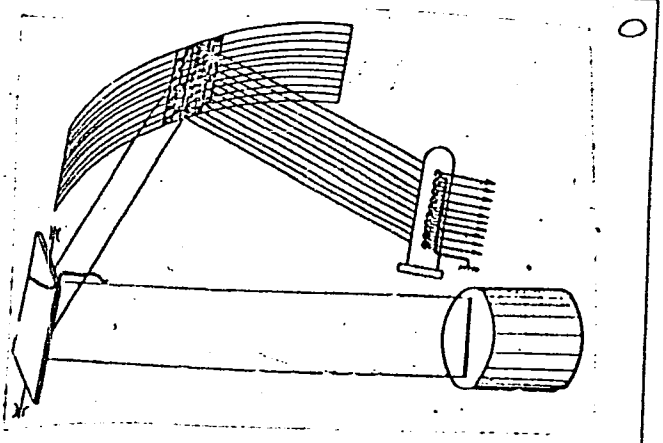

Fig. 1. Diagram of converter with focusing mirror.

SUB CODE: 09/ SUBM DATE: 08Jan66/ ATD PRESS: 4258

Card 2/2

APPROVED FOR RELEASE: 08/23/2000 CIA-RDP86-00513R001549010016-4"

"APPROVED FOR RELEASE: 08/23/2000 CIA-RDP86-00513R001549010016-4

SHEKSHNYA, V.L., kand. tekhn. nauk.

Servomechanism with an increased setting moment. Trudy MEI no.13: 151-161 '53. (MIRA 11:4)

1. Moskovskiy energeticheskiy institut im. V.M. Molotova, Kafedra avtomatiki i telemekhaniki.
(Servomechanisms)

APPROVED FOR RELEASE: 08/23/2000 CIA-RDP86-00513R001549010016-4"

"APPROVED FOR RELEASE: 08/23/2000 CIA-RDP86-00513R001549010016-4

L 25646-65 EWT(d)/EWP(1)
ACCESSION NR: AR5003759 S/0284/64/000/011/0025/0025

7
5
B

SOURCE: Ref. zh. Voprosy tekhnicheskogo progressa i organizatsii proizvodstva v mashinostroyenii. Otd. vyp., Abs. 11.35.176

AUTHOR: Shekshuyev, A. Ya.

TITLE: Mass invention--an important form of worker participation in creating the material and technical basis of communism

CITED SOURCE: Sb. nauchn. rabot kafedr polit. ekon. vuzov g. Khar'kova, vyp. 3, 1963, 91-102

TOPIC TAGS: research and development management, industrial planning, industrial production, propaganda

14

TRANSLATION: The great scope of invention and improved production methods in socialist industry is made possible by the continual growth in the technical equipment of the national economy, the rapid rise in the technical and cultural level of the working class and every kind of support from the Communist Party and the Soviet Government. In order to increase mass participation of the workers in developing the technology of enterprises in the Khar'kovskaya oblast, various

Card 1/3

APPROVED FOR RELEASE: 08/23/2000 CIA-RDP86-00513R001549010016-4"