"APPROVED FOR RELEASE: 07/13/2001 CIA-RDP86-00513R001549110017-2

GORODETSKAYA, R.V., kandidat khimicheskikh nauk; SHAKHNAZAROVA, M.Sh., mladshiy nauchnyy sotrudnik; SHEREMET, M.V.; VIRNIK, D.I.; SMIRNOVA, V.Ye.; YESAKOVA, R.

Methods of determining the degree of liming in gelatigenous tissues. Trudy VNIIMP no.7:114-122 '55. (MLRA 9:8)

1. Vsesoyuznyy nauchno-issledovatel'skiy institut myasnoy promyshlennosti (for Gorodetskaya, Shakhnazarova, Sheremet); 2. Moskovskiy zhelatinovyy zavod (for Virnik, Smirnova, Yesakova).
(Gelating)

APPROVED FOR RELEASE: 07/13/2001 CIA-RDP86-00513R001549110017-2"

"APPROVED FOR RELEASE: 07/13/2001 CIA-RDP86-00513R001549110017-2

SHPAK, M.I.; SOLOV'YEV, A.V. [Solovyov, A.V.]; SHEREMET, N.I.; DMITRENKO, I.P. [Dmytenko, O.P.]

Spectra investigation of chemical transformations in crystalline triphenylmethane. Ukr.fiz.zhur. 7 no.4:422-429 Ap '62. (MIRA 15:8)

1. Institut fiziki AN UkrSSR, g. Kiyev.
(Methane) (Chemical reactions)

APPROVED FOR RELEASE: 07/13/2001 CIA-RDP86-00513R001549110017-2"

"APPROVED FOR RELEASE: 07/13/2001 CIA-RDP86-00513R001549110017-2

SHPAK, M.T.; SOLOV'YEV, A.V.; SHEREMET, N.I.

Nature of the luminescence spectra of crystalline benzene at low temperatures. Opt.i spektr. 13 no.5:694-700 N '62.

(MIRA 15:12)

(Benzene crystals--Spectra)

APPROVED FOR RELEASE: 07/13/2001 CIA-RDP86-00513R001549110017-2"

"APPROVED FOR RELEASE: 07/13/2001 CIA-RDP86-00513R001549110017-2

SHPAK, M.T.; SOLOV'YEV, A.V.; SHEREMET, N.I.

Luminescence of crystalline benzene. Izv.AN SSSR.Ser.fiz. 27 no.4:510-511 Ap '63. (MIRA 16:4)

1. Institut fiziki AN UkrSSR.
(Benzene crystals--Spectra)

APPROVED FOR RELEASE: 07/13/2001 CIA-RDP86-00513R001549110017-2"

"APPROVED FOR RELEASE: 07/13/2001 CIA-RDP86-00513R001549110017-2

L 11169-63 EPF(c)/EPR/EWP(j)/EWT(l)/EWT(m)/BDS/EEC(b)-2--AFFTC/ASD/SSD--Pr-4/Ps-4/Pc-4--IJP(C)/RM/WW

ACCESSION NR: AP3002792 S/0051/63/014/006/0816/0819

AUTHOR: Shpak, M. T.; Sheremet, N. I.

TITLE: On the nature of the luminescence of crystalline anthracene at low temperatures

SOURCE: Optika i spektroskopiya, v. 14, no. 6, 1963, 816-819

TOPIC TAGS: anthracene, luminescence

ABSTRACT: Although there have been many investigations of the luminescence of anthracene, the nature of its luminescence is still obscure. It has been shown that the luminescence at low temperatures is not due to radiative annihilation of excitons in the main lattice. On the other hand, it has also recently been shown that the luminescence spectra of naphthalene and benzene have certain characteristics that may be associated with exciton effects and that should be exhibited by other molecular crystals. The paper gives the results of investigation of the luminescence of zone refined (40 zone) crystal anthracene in polarized light at 20.4, 77 and 290°K. Excitation was realized by the light from a DRSh-250 mercury discharge tube passing through a Woods filter; the spectra were observed by ISP-22 and DFS-13 spectrographs. The spectra along two crystal axes are reproduced and

Card 1/2

APPROVED FOR RELEASE: 07/13/2001 CIA-RDP86-00513R001549110017-2"

"APPROVED FOR RELEASE: 07/13/2001 CIA-RDP86-00513R001549110017-2

L 11169-63
ACCESSION NR: AP3002792

0

described. Analysis of the luminescence data in conjunction with the literature data on the absorption spectrum shows that the first bands of both components partially overlap which indicates that they correspond to pure electronic transitions from exciton bands in the crystal. This is substantiated by the temperature dependence of the intensity and width of these bands. Three other groups of bands were distinguished in the luminescence spectrum at 20.4°K: one is attributed to an impurity; the second is associated with transitions in distorted host molecules located near lattice defects; the third is tentatively attributed to transitions from the lowest exciton band to a set of ground-state electronic-vibrational levels. Orig. art. has: 1 figure.

ASSOCIATION: none

SUBMITTED: 10Dec62 DATE ACQD: 15Jul63 ENCL: 00

SUB CODE: 00 NO REF SOV: 011 OTHER: 005

lb/wm

Card 2/2

APPROVED FOR RELEASE: 07/13/2001 CIA-RDP86-00513R001549110017-2"

"APPROVED FOR RELEASE: 07/13/2001 CIA-RDP86-00513R001549110017-2

L 38483-66 EWT(m)/EWP(j) IJP(c) RM/JW/FDN

ACC NR: AR6017246 SOURCE CODE: UR/0058/65/000/012/D042/D042

AUTHOR: Vatulev, V. N.; Sheremet, N. I.; Shpak, M. T. 16 B

TITLE: Spectral investigation of crystalline benzene at low temperatures

SOURCE: Ref. zh. Fizika, Abs. 12D350

REF SOURCE: Tr. Komis. po spektroskopii. AN SSSR, t. 3, vyp. 1, 1964, 468-472

TOPIC TAGS: absorption spectrum, luminescence spectrum, exciton zone, crystalline benzene

ABSTRACT: The luminescence and absorption spectra of crystalline benzene were investigated at 20.4 and 4.2K. The temperature relationships in luminescence spectra were evaluated. Preliminary information on the structure of benzene exciton zones, including their width and effective-mass characteristics, were obtained on the basis of a qualitative analysis of the shape of bands corresponding to transitions from the exciton zones to the basic vibration level. [Translation of abstract] [KP]

SUB CODE: 20/ SUBM DATE: none/

Card 1/1 pb

APPROVED FOR RELEASE: 07/13/2001 CIA-RDP86-00513R001549110017-2"

"APPROVED FOR RELEASE: 07/13/2001 CIA-RDP86-00513R001549110017-2

VASILEV, V.N., SHEREMET, N.I.; SHPAK, M.T.

Luminescence of benzene at low temperatures. Opt. i spektr. 16 no. 4:577-586 Ap '64. (MIRA 17:5)

APPROVED FOR RELEASE: 07/13/2001 CIA-RDP86-00513R001549110017-2"

"APPROVED FOR RELEASE: 07/13/2001 CIA-RDP86-00513R001549110017-2

[illegible], M.I.; [illegible], N.I.

Luminescence of crystalline anthracene. Opt. i spektr. 17 no.5: 694-704 N '64. (MIRA 1[illegible]:12)

APPROVED FOR RELEASE: 07/13/2001 CIA-RDP86-00513R001549110017-2"

"APPROVED FOR RELEASE: 07/13/2001 CIA-RDP86-00513R001549110017-2

NERETIN, V.Ya., st. nauchn. sotr., red.; GRINAVTSEVA, V.P., red.; GOROKHOVA, N.A., red.; SHEREMET, S.I., red.; OSTROVSKAYA, L.M., red.

[Progress in the diagnosis and treatment of nervous diseases; transactions of the Institute] Uspekhi v diagnostike i lechenii nervnykh zabolevanii; trudy instituta. Pod red. V.IA. Neretina.. Moskva, 1963. 358 p. (MIRA 17:6)

1. Moscow. Oblastnoy nauchno-issledovatel'skiy institut.

APPROVED FOR RELEASE: 07/13/2001 CIA-RDP86-00513R001549110017-2"

"APPROVED FOR RELEASE: 07/13/2001 CIA-RDP86-00513R001549110017-2

CHERNOV, G.A.; SHEREMET, [illegible]; [illegible], [illegible].

Effect of irradiation on the permeability of blood vessels and on the mucopolysaccharide and serotonin level in the blood. Med. rad. 9 no.2:58-62 D '64.

(MIRA 18:12)

1. Radiobiologicheskaya laboratoriya (zav. - prof. M.O. Raushenbakh) TSentral'nogo ordena Lenina instituta gematologii i perelivaniya krovi Ministerstva zdravookhraneniya SSSR, Moskva.

APPROVED FOR RELEASE: 07/13/2001 CIA-RDP86-00513R001549110017-2"

"APPROVED FOR RELEASE: 07/13/2001 CIA-RDP86-00513R001549110017-2

SHEREMET, Vasiliy Alekseyevich; SMIRNOV, Vyacheslav Nilovich; PAVLOVICH, Pavel Modestovich; KUZMINTSEV, V.N., inzh., retsenzent; YEMEL'YANOV, L.V., inzh., red.; TIKHANOV, A.Ya., tekhn. red.

[Mechanisms, devices and auxiliary equipment for forging and die-stamping processes; an album] Mekhanizmy, prisposobleniia i sredstva mekhanizatsii kuznechno-pressovogo proizvodstva; al'bom. Moskva, Gos. nauchno-tekhn. izd-vo mashinostroit. lit-ry, 1960. 93 p. (MIRA 14:6)

(Forging machinery) (Sheet metal working machinery)

APPROVED FOR RELEASE: 07/13/2001 CIA-RDP86-00513R001549110017-2"

"APPROVED FOR RELEASE: 07/13/2001 CIA-RDP86-00513R001549110017-2

SHEREMET, V.G.

Weed control during fall tillage. Zemledelie 24 no.8:85 Ag '62. (MIRA 15:9)

1. Vostochno-Kazakhstanskaya oblastnaya gosudarstvennya sel'skokhozyaystvennaya opytnaya stantsiya.
(East Kazakhstan Province—Weed control)

APPROVED FOR RELEASE: 07/13/2001 CIA-RDP86-00513R001549110017-2"

"APPROVED FOR RELEASE: 07/13/2001 CIA-RDP86-00513R001549110017-2

ACC NR: AP6029807 (N) SOURCE CODE: UR/0229/66/000/007/0035/0039

44

AUTHOR: Sheremet, V. P.

ORG: none

TITLE: A unified semiconductor device for automatic distribution of active power

SOURCE: Sudostroyeniye, no. 7, 1966, 35-39

TOPIC TAGS: transistorized circuit, pulse transformer, pulse shaper, electric distribution equipment, servomotor, reliability / SL281 servomotor

ABSTRACT: A unified device for distributing active power to marine generators is described. The device, using the principle of proportional pulse control and semiconductor elements, has three independent units: an active-power pickup (see Fig. 1); a pulse converter, and an output amplifier. The circuit is triggered by a power level determined in the effective area of the sloping front of the master pulses according to a power-mismatch signal. The pulse converter consists of a multivibrator, a pulse shaper, and an intermediate amplifier. The device is distinguished from other circuits with contact elements or magnetic amplifiers in that it has a high response speed, inertialess operation, and high reliability with protection from false response. The pulse repetition rate is determined by the nature of the control and can be from 0.2 to 1 cps. The device ensures width modulation of the output pulses from 0.05 to 0.5 of their repetition rate. The distribution accuracy was found to be not less

UDC: 629.12.-83-52

Card 1/2

APPROVED FOR RELEASE: 07/13/2001 CIA-RDP86-00513R001549110017-2"

"APPROVED FOR RELEASE: 07/13/2001 CIA-RDP86-00513R001549110017-2

L 09978-67

ACC NR: AP6029807

To phase-A current transformer

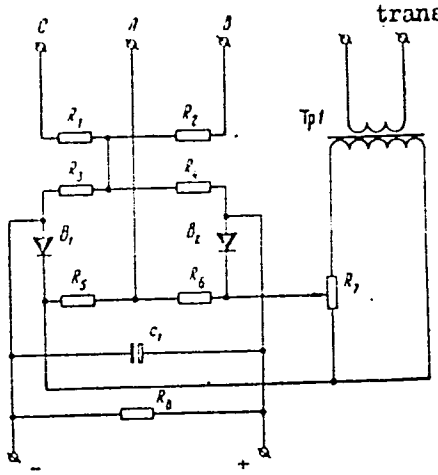

Fig. 1. Circuit of active-power pickup.

than 3%. Orig. art. has: 12 formulas, 2 graphs, and 3 diagrams.

SUB CODE: 10, 09, 13/ SUBM DATE: none/ ORIG REF: 005

APPROVED FOR RELEASE: 07/13/2001 CIA-RDP86-00513R001549110017-2"

"APPROVED FOR RELEASE: 07/13/2001 CIA-RDP86-00513R001549110017-2

SH[illegible], Ya. V.

Sheremet, Ya. V.

"A rational system of shears for cutting hot blooms and slabs, and an investigation of it." Acad Sci Ukrainian SSR. Inst of Ferrous Metallurgy. Dnepropetrovsk, 1956. (Dissertation for the Degree of Candidate in Technical Sciences).

Knizhnaya letopis'
No. 21, 1956. Moscow.

APPROVED FOR RELEASE: 07/13/2001 CIA-RDP86-00513R001549110017-2"

"APPROVED FOR RELEASE: 07/13/2001 CIA-RDP86-00513R001549110017-2

S/123/61/000/006/015/020
A004/A104

AUTHOR: Sheremet, Ya. V.

TITLE: Method of plotting the member positions of lever shears with lever-type clamping mechanism

PERIODICAL: Referativnyy zhurnal, Mashinostroyeniye, no. 6, 1961, 18, abstract 6V120. ("Sb. nauchn. tr. Dnepropetr. metallurg. in-t", 1958, no.35, 36-45)

TEXT: The author describes a method of plotting the position of the members of the 800-ton capacity lever shears with lever-type clamping mechanism designed and fabricated at the Novo-Kramatorskiy mashinostroitel'nyy zavod im. Stalina (Novo-Kramatorsk Mechanical Engineering Plant im. Stalin) for the pipe-blank shop of the Plant im. Dzerzhinskiy. The shears belong to the mechanism of alternating structure: in the idling period to the fourth class of the third order, and in the cutting period to the sixth class of the fifth order. The presented method is an example of using the method of false positions of members of a complex mechanism. There are 6 figures.

S. Kolesnikov

[Abstractor's note: Complete translation]

Card 1/1

APPROVED FOR RELEASE: 07/13/2001 CIA-RDP86-00513R001549110017-2"

"APPROVED FOR RELEASE: 07/13/2001 CIA-RDP86-00513R001549110017-2

25(1) SOV/148-59-2-18/24

AUTHOR: Sheremet, Ya.V., Candidate of Technical Sciences

TITLE: Some Peculiarities of the Kinematic Investigation of Lever Shears With Leverage Clamping (Nekotoryye osobennosti kinematicheskogo issledovaniya rychazhnykh nozhnits s rychazhnym mekhanizmom prizhima)

PERIODICAL: Izvestiya vysshikh uchebnykh zavedeniy. Chernaya metallurgiya, 1959, Nr 2, pp 135-142 (USSR)

ABSTRACT: The kinematic investigation of the mechanism of lever shears with intermediate drive and a leverage clamping mechanism was carried out separately for the stage of idle run and cutting. General indications are given on the method of plotting the position of links and of setting-up the rate and acceleration of the rotation of hinges. The described method facilitates the complicated determination of the true rate and acceleration of hinges in high-class mechanisms by the subdivision into a series of less complicated problems, which can easily be solved by any designing office.
There are 7 diagrams and 3 Soviet references

Card 1/2

APPROVED FOR RELEASE: 07/13/2001 CIA-RDP86-00513R001549110017-2"

"APPROVED FOR RELEASE: 07/13/2001 CIA-RDP86-00513R001549110017-2

GORBOVSKAYA, T.G.; SHEREMET, Ye.G.; SOBOLEVSKAYA, O.P.; CHEMERINSKAYA, K.S.
MAYEVSKAYA, N.K.

In honor of professor K.A.Karysheva's 70th birthday. Vest. ven. i derm. no.3:63 My-Je '54. (MLRA 7:8)
(KARYSHEVA, KSENIIA ALEKSANDROVNA, 1883-)

APPROVED FOR RELEASE: 07/13/2001 CIA-RDP86-00513R001549110017-2"

"APPROVED FOR RELEASE: 07/13/2001 CIA-RDP86-00513R001549110017-2

L 48816-65 EWT(d)/EWT(1)/EWA(d)/EWP(v)/EEC(b)-2/EWP(k)/EWP(h)/EWP(1)/EWA(h)
Pm-4/Po-4/Pq-4/Pf-4/Pg-4/Peb/Pl-4

ACCESSION NR: AP5008333 S/0115/65/000/001/0011/0013

AUTHOR: Golovinskiy, L. V.; Sheremet, Ye. M.

TITLE: Enhancing the reliability of some pulse circuits used in measuring devices

SOURCE: Izmeritel'naya tekhnika, no. 1, 1965, 11-13

TOPIC TAGS: reliability, measuring device

ABSTRACT: The results are reported of an investigation of a "system characterized by great complexity and high requirements for its reliability over a long period of time, within ... -40+50C" [Abstracter's note: The outfit is neither named nor specified.] The principal circuits of a coincidence circuit and a trigger circuit are given. The system reliability was investigated by the marginal-check method with these results: (1) For coincidence and trigger circuits, the supply-voltage value can be used as a marginal parameter; (2) The

Card 1/2

APPROVED FOR RELEASE: 07/13/2001 CIA-RDP86-00513R001549110017-2"

"APPROVED FOR RELEASE: 07/13/2001 CIA-RDP86-00513R001549110017-2

L 48816-65

ACCESSION NR: AP5008333

optimal voltage for a trigger is 10.5 v, and for coincidence stage, 9.5 v; (3) The selection of optimal parameters permitted widening the operating temperature range from −40+60C to −50+80C; as a result, the probability of correct operation increased from 94% to 96%; (4) In the above two circuits, the probability of gradual and sudden failure was 70% and 30%, respectively. Orig. art. has: 4 figures and 4 tables.

ASSOCIATION: none

SUBMITTED: 00 ENCL: 00 SUB CODE: IE

NO REF SOV: 001 OTHER: 000

Card 2/2

APPROVED FOR RELEASE: 07/13/2001 CIA-RDP86-00513R001549110017-2"

"APPROVED FOR RELEASE: 07/13/2001 CIA-RDP86-00513R001549110017-2

APPROVED FOR RELEASE: 07/13/2001 CIA-RDP86-00513R001549110017-2"

"APPROVED FOR RELEASE: 07/13/2001 CIA-RDP86-00513R001549110017-2

L 4097-66 EWT(1)/EWA(h) GG

ACCESSION NR: AP5025580 UR/0115/65/000/009/0004/0006
621.382.2.019.3

32
B

AUTHOR: Golovinskiy, L. V.; Sheremet, Ye. M.

TITLE: Taking account of gradual failure in a switching element based on a tunnel diode

SOURCE: Izmeritel'naya tekhnika, no. 9, 1965, 4-6

TOPIC TAGS: tunnel diode, switching circuit, circuit reliability

ABSTRACT: The authors describe a switching device for a measuring system (see fig. 1 of the Enclosure). The unit is based on tunnel diode *TD* in combination with a transistor, Forward bias is applied to the tunnel diode through resistor R_1 so that the current-voltage curve for R_1 intersects the curve for *TD* at two points *A* and *B* on ascending branches of the curve (see fig. 2 of the Enclosure). Thus a bistable element is produced which is changed over by pulses of different polarity and amplitude. Negative voltage pulses appear at the output of this type of flip-flop with amplitude $U_{out}=U_B-U_A$. These pulses serve as the input voltage to the keying amplifier based on transistor *T*, which is normally closed. Positive pulses of the

Card 1/3

APPROVED FOR RELEASE: 07/13/2001 CIA-RDP86-00513R001549110017-2"

"APPROVED FOR RELEASE: 07/13/2001 CIA-RDP86-00513R001549110017-2

L 4097-66

ACCESSION NR: AP5025580

given amplitude appear at the output of the transistor. The response of this switching device is approximately 50-100 mμsec depending entirely on the type of transistor used. Limit tests are used for determining the extent to which the working capacity of the flip-flop is dependent on variations in the parameters of the elements and on the effect of other external factors on the assumption that gradual failures make up 60-70% of the total number of failures. The results of the limit tests and checking of the altered circuit for 240 hours at 50° showed that the operating capacity of the circuit is insensitive to changes in the parameters of its elements within rather wide limits (±30-50%). Orig. art. has: 3 figures, 5 formulas.

ASSOCIATION: none

SUBMITTED: 00 ENCL: 01 SUB CODE: EC

NO REF SOV: 002 OTHER: 001

Card 2/3

APPROVED FOR RELEASE: 07/13/2001 CIA-RDP86-00513R001549110017-2"

"APPROVED FOR RELEASE: 07/13/2001 CIA-RDP86-00513R001549110017-2

L 4097-66

ACCESSION NR: AP5025580

ENCLOSURE: 01

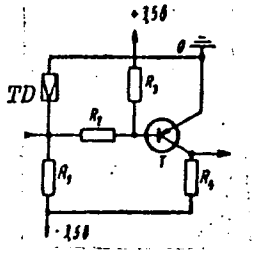

Fig. 1.

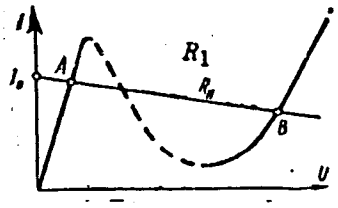

Fig. 2. Stable operating points of tunnel diode *TD* loaded by resistor R_1.

BVK.

Card 3/3

APPROVED FOR RELEASE: 07/13/2001 CIA-RDP86-00513R001549110017-2"

"APPROVED FOR RELEASE: 07/13/2001 CIA-RDP86-00513R001549110017-2

Sheremet, Z. I.

The digestive and metabolic functions of the gastrointestinal canal of cattle. Z. I. Sheremet. *Fiziol. Pitaniya Sel'skokhoz. Zhivotnykh* (Moscow: Sel'khozgiz) 1953, 59-101; *Referat. Zhur. Khim., Biol. Khim.* 1955, No. 10347.—

In three cows with external duodenal anastomoses the duodenum was found to contain a homogeneous chyme (I), the compn. of which is independent of the age or productivity of the animal, but its vol. appears to be related to the type and amt. of nutrition. H_2O in I varied from 94.7 to 97.3%, ash from 0.75 to 0.94%, and N from 0.111 to 0.166%. It was detd. that 50% of substances introduced with the food do not enter into the duodenal chyme. This is assumed to be due to the fact that in the upper part of the digestive app. of cattle both splitting and absorption of ingested foods takes place. This applies largely to the carbohydrates and to a lesser extent to the fats. In this respect it was found that 1:4 or 1:6 ratios of carbohydrates and fats of the ingested foods appear in I in a 1:1 ratio. The mineral substances in I increase, which is believed to be a consequence of I mixing with the gastric juices. The amt. of H_2O absorbed from the intestinal canal is in considerable excess of the H_2O taken in with the food. The amt. of protein absorbed is 75-90% of the amt. taken in as food and the amt. of carbohydrates and fats absorbed are 12-16% of the amt. injested. The amino-acid compn. of the total proteins of the pancreatic juice, secured through a fistula, has a higher content of tryptophan and tyrosine and a lower content of histidine than the proteins of the blood serum.

B. S. Levine.

MD

APPROVED FOR RELEASE: 07/13/2001 CIA-RDP86-00513R001549110017-2"

"APPROVED FOR RELEASE: 07/13/2001 CIA-RDP86-00513R001549110017-2

SHEREMET, Z.I.; RAUSHENBAKH, M.O.

Effect of roentgen rays on cytochrome C [with summary in English]. Med.rad. 3 no.6:40-46 N-D '58. (MIRA 12:1)

1. Iz TSentral'nogo ordena Lenina instituta gematologii i perelivaniya krovi Ministerstva zdravookhraneniya SSSR.
(CYTOCHROMES, metabolism,
c, eff. of x-rays (Rus))
(ROENTGEN RAYS, eff.
on cytochrome c metab. (Rus))

APPROVED FOR RELEASE: 07/13/2001 CIA-RDP86-00513R001549110017-2"

"APPROVED FOR RELEASE: 07/13/2001 CIA-RDP86-00513R001549110017-2

BAGDASAROV, A.A., prof.; CHERTKOV, I.L.; RAUSHENBAKH, M.O., prof.; SAMOYLINA, N.L.; SHEREMET, Z.I.

Properdin system in acute radiation sickness. Med. rad. 4 no.4: 3-10 Ap '59. (MIRA 12:7)

1. Iz TSentral'nogo ordena Lenina instituta gematologii i perelivaniya krovi. 2. Deystvitel'nyy chlen AMN SSSR (for Bagdasarov).

(PROPERDIN,
in radiation sickness in animals (Rus))
(ROENTGEN RAYS, eff.
acute radiation sickness on properdin system in animals (Rus))

APPROVED FOR RELEASE: 07/13/2001 CIA-RDP86-00513R001549110017-2"

"APPROVED FOR RELEASE: 07/13/2001 CIA-RDP86-00513R001549110017-2

VOROB'YEV, V.N.; SHEREMET, Z.I.; RAUSHENBAKH, M.O., prof.

Effect of ionizing radiations on preserved blood and plasma.
Med.rad. 4 no.6:65-73 Je '59. (MIRA 12:8)

1. Iz TSentral'nogo ordena Lenina instituta gematologii i perelivaniya krovi.
(BLOOD, PRESERVED,
eff. of x-rays (Rus))
(ROENTGEN RAYS, eff.
on preserved blood (Rus))

APPROVED FOR RELEASE: 07/13/2001 CIA-RDP86-00513R001549110017-2"

"APPROVED FOR RELEASE: 07/13/2001 CIA-RDP86-00513R001549110017-2

SHEREMET, Z.I.; MANTEYFEL', V.M.; RAUSHENBAKH, M.O.

Changes in blood and tissue mucopolysaccharides and the hyaluronidase inhibitor in animals in acute radiation sickness. Med.rad. 4 no.12:25-39 D '59. (MIRA 13:5)

1. Iz TSentral'nogo ordena Lenina instituta gematologii i perelivaniya krovi Ministerstva zdravookhraneniya SSSR.
(POLYSACCHARIDES metab.)
(HYALURONIDASE antagonists)
(RADIATION SICKNESS exper.)

APPROVED FOR RELEASE: 07/13/2001 CIA-RDP86-00513R001549110017-2"

"APPROVED FOR RELEASE: 07/13/2001 CIA-RDP86-00513R001549110017-2

CHERTKOV, I.L.; SHEREMET, Z.I.

Mechanism of the lowering of the properdin level in the blood in acute radiation sickness. Med.rad. 6 no.3:30-35 '61. (MIRA 14:5)

(RADIATION SICKNESS) (PHOPERDIN)

APPROVED FOR RELEASE: 07/13/2001 CIA-RDP86-00513R001549110017-2"

"APPROVED FOR RELEASE: 07/13/2001 CIA-RDP86-00513R001549110017-2

S/241/63/008/001/003/006
D243/D307

AUTHORS: Sheremet, Z.I. and Kazanova, L.I.

TITLE: The effect of vitamin B_{12} on the content of nucleic acids in the blood-forming organs of irradiated animals

PERIODICAL: Meditsinskaya radiologiya, v.8, no. 1, 1963, 46-53

TEXT: The present work was carried out in view of the lack of information concerning the effect of vitamin B_{12} on the nuclein metabolism, and to determine the advisability of treatment with this vitamin during radiation sickness. The nucleic acid contents were measured, by biochemical and cytochemical methods, in the bone marrow and spleen of guinea pigs X-ray-irradiated with a total dose of 300 r, at 13-26 r/min. The test animals were treated intramuscularly with vitamin B_{12} every other day following irradiation and were then decapitated. Comparative tests were run on the nucleic acid contents in the above organs after (1) irradiation alone, (2) vitamin treatment alone, and (3) combined irradiation and vitamin

Card 1/3

APPROVED FOR RELEASE: 07/13/2001 CIA-RDP86-00513R001549110017-2"

"APPROVED FOR RELEASE: 07/13/2001 CIA-RDP86-00513R001549110017-2

treatments. The acids were resolved into DNA and RNA. (1) The contents of both acids decreased sharply after irradiation, particularly in the bone marrow; in the latter organ the RNA/DNA ratio increased from 0.45 - 0.46 to 0.73 - 0.93 seven days after irradiation. The corresponding rise of this ratio in the spleen was 0.52 - 0.53 to 0.57 - 0.61. Morphological and cytochemical changes were in agreement with and supplemented the biochemical tests. Most irradiated animals exhibited hypoplasia and aplasia of the bone marrow. Lowering of the nucleic acid contents in the bone marrow is ascribed not only to radiation damage but also to morphological changes induced in this organ. (2) Vitamin doses of 10 μg, on alternate days, for 6-7 days, essentially did not affect the nucleic acid contents, although in 43% of the animals a statistically significant 19% rise in the content of DNA was observed. The results for spleen show little difference between the treated and the control animals. (3) Administration of vitamin B_{12} during the first half of radiation sickness (10 or 40 μg) led in most cases to an even sharper decline of the DNA content in bone marrow, and to greater aplasia, showing

APPROVED FOR RELEASE: 07/13/2001 CIA-RDP86-00513R001549110017-2"

"APPROVED FOR RELEASE: 07/13/2001 CIA-RDP86-00513R001549110017-2

that the reduction of nucleic acids in blood-forming organs is not connected with a shortage of vitamin B_{12}. The RNA in bone marrow and the DNA and RNA in spleen were unaffected. Administration of vitamin B_{12} is therefore not recommended in the initial stages of acute radiation sickness although it should be given when formation of blood is reduced. There are 1 figure and 3 tables.

ASSOCIATION: Tsentralnyy ordena Lenina institut gematologii i perelivaniya krovi (Central 'Order of Lenin' Institute of Hematology and Blood Transfusion)

SUBMITTED: May 22, 1962

APPROVED FOR RELEASE: 07/13/2001 CIA-RDP86-00513R001549110017-2"

"APPROVED FOR RELEASE: 07/13/2001 CIA-RDP86-00513R001549110017-2

[illegible] -; [illegible], N. [illegible].

"Anatomic and Histological Research on the Problem of the Tonsillic Capsule," Vest. Oto-Rino-Laringol., No. 4, 1949. Cand. Medical Sci. Mbr., Oto-Rino-Laringological Clinic, 2nd Moscow Med. Inst. im. I. V. Stalin, -c1949-.

APPROVED FOR RELEASE: 07/13/2001 CIA-RDP86-00513R001549110017-2"

"APPROVED FOR RELEASE: 07/13/2001 CIA-RDP86-00513R001549110017-2

POZMOGOV, A.I.;SHEREMET-SHCHERBAK, N.G.,kandidat meditsinskikh nauk.

Tomography in the diagnosis of laryngeal cancer. Vest. oto-rin. 17 no. 6:12-16 N-D '55. (MLRA 9:2)

1. Iz Kiyevskogo rentgeno-onkologicheskogo instituta .
(LARYNX, neoplasms,
diag., tomography)

APPROVED FOR RELEASE: 07/13/2001 CIA-RDP86-00513R001549110017-2"

"APPROVED FOR RELEASE: 07/13/2001 CIA-RDP86-00513R001549110017-2

SHEREMET-SHCHERBAK, N.G., starshiy nauchnyy sotrudnik; NAZIMOK, N.F., nauchnyy sotrudnik

Roentgenotherapy of chronic sinusitis. Vest.rent. i rad. 34 no.4: 91-92 Jl-Ag '59. (MIRA 12:12)

1. Iz Kiyevskogo rentgeno-radiologicheskogo i onkologicheskogo instituta (dir. - prof. I.T. Shevchenko).
(SINUSITIS radiotherapy)

APPROVED FOR RELEASE: 07/13/2001 CIA-RDP86-00513R001549110017-2"

"APPROVED FOR RELEASE: 07/13/2001 CIA-RDP86-00513R001549110017-2

SHEREMET-SHCHERBAK, N.G., starshiy nauchnyy sotrudnik

Combined treatment of malignant tumors of the nasal cavity and the paranasal sinuses. Preliminary report. Zhur. ush., nos. i gorl. bol. 20 no. 3:34-37 My-Je '60. (MIRA 14:4)

1. Iz khirurgicheskoy klinik Kiyevskogo nauchno-issledovatel'skogo rentgeno-radiologicheskogo i onkologicheskogo instituta.
(NOSE, ACCESSORY SINUSES OF--CANCER)

APPROVED FOR RELEASE: 07/13/2001 CIA-RDP86-00513R001549110017-2"

"APPROVED FOR RELEASE: 07/13/2001 CIA-RDP86-00513R001549110017-2

GANINA, K.P.; SHEREMET-SHCHERBAK, N.G.

Case of cyst of Highmore's antrum. Zhur. ush., nos. i gorl. bol. 20 no.4:55-56 Jl-Ag '60. (MIRA 14:6)

1. Iz khirurgicheskoy kliniki Kiyevskogo nauchno-issledovatel'skogo rentgeno-radiologicheskogo i onkologicheskogo instituta.
(NOSE, ACCESSORY SINUSES OF--TUMORS)

APPROVED FOR RELEASE: 07/13/2001 CIA-RDP86-00513R001549110017-2"

"APPROVED FOR RELEASE: 07/13/2001 CIA-RDP86-00513R001549110017-2

SOV/180-59-2-27/34

AUTHORS: Zhuze, T.P., and Sheremeta, B.K. (Moscow)

TITLE: Adsorption Method of Purifying Ozocerite with the Use of Gaseous Solvents for Extraction (Adsorbtsionnyy metod ochistki ozokerita s ispol'zovaniyem dlya ekstraktsii gazovykh rastvoriteley)

PERIODICAL: Izvestiya akademii nauk SSSR, Otdeleniye tekhnicheskikh nauk, Metallurgiya i toplivo, 1959, Nr 2, pp 144-147 (USSR)

ABSTRACT: The authors outline the present, defective, industrial method of extracting ceresin from crude ozocerite in two stages. They describe a better procedure they have developed. In this an adsorption purification stage is combined with extraction by compressed gas. The ordinary ozocerite is obtained by the normal method by distilling off the oils from crude ozocerite. The ordinary ozocerite is heated to 120 - 140 °C and mixed with 2 to 3 times its weight of adsorbent. The mixture is charged into an extraction column and heated to 100 °C, after which gas at 60 - 100 atm. gauge is passed through. The dissolved ceresin is precipitated in a separator at 100°C in which the pressure is kept at 40 - 50 atm., corresponding to a very low solubility of ceresin in gas. The

Card 1/3

APPROVED FOR RELEASE: 07/13/2001 CIA-RDP86-00513R001549110017-2"

"APPROVED FOR RELEASE: 07/13/2001 CIA-RDP86-00513R001549110017-2

SOV/180-59-2-27/34

Adsorption Method of Purifying Ozocerite with the Use of Gaseous Solvents for Extraction

gas is compressed and re-used; the finished ceresin is periodically removed via a trap. In their experiments the authors used an extraction column 1500 mm long and 45 mm in diameter, which could hold 3 kg of adsorbent-ozocerite mixture. The ceresin content of the gas before the separator was determined. A variety of standard grades of ozocerite with infusorial earth or alumino-silicate dust as the adsorbent was studied with gas containing 0.2% ethylene, 4.1% ethane, 3.3% propylene, 89.3% propane, and 3.1% butane as the solvent. The results are tabulated showing the adsorbent/standard ozocerite weight ratio; mixing temperature (°C); the mixing time (minutes); extraction pressure (atmospheres gauge); yield of ceresin fractions (% of standard ozocerite); total ceresin yield (% of standard ozocerite); drop precipitation temperature (°C); number of penetrations; colour on Stammer's scale. By stepwise regulation of the pressure ceresin fractions of different melting points could be obtained separately.

Card 2/3

APPROVED FOR RELEASE: 07/13/2001 CIA-RDP86-00513R001549110017-2"

"APPROVED FOR RELEASE: 07/13/2001 CIA-RDP86-00513R001549110017-2

SOV/180-59-2-27/34

Adsorp tion Method of Purifying Ozocerite with the Use of Gaseous Solvents for Extraction

Another advantage of the authors' method is that, since there is no high-temperature treatment of ozocerite with sulphuric acid, the original hydrocarbon branched structure is preserved.
There are 1 table and 2 Soviet references.

SUBMITTED: July 16, 1958

Card 3/3

APPROVED FOR RELEASE: 07/13/2001 CIA-RDP86-00513R001549110017-2"

"APPROVED FOR RELEASE: 07/13/2001 CIA-RDP86-00513R001549110017-2

SHEREMETA, B. K., Cand Tech Sci (diss) -- "The adsorption method of purifying wax products using compressed gas for extraction". Moscow, 1960. 14 pp (Acad Sci USSR, Inst of Geology and Working of Mineral Fuels), 150 copies (KL, No 9, 1960, 126)

APPROVED FOR RELEASE: 07/13/2001 CIA-RDP86-00513R001549110017-2"

"APPROVED FOR RELEASE: 07/13/2001 CIA-RDP86-00513R001549110017-2

ZHUZE, T.P.; SHEREMETA, B.K.

Adsorption method for the purification of raw ozocerites using compressed gases for the extraction. Trudy Inst.nefti 13 '59. (MIRA 13:12)

(Ozocerite) (Gases, Compressed)

APPROVED FOR RELEASE: 07/13/2001 CIA-RDP86-00513R001549110017-2"

"APPROVED FOR RELEASE: 07/13/2001 CIA-RDP86-00513R001549110017-2

SHEREMETA, B.K., kand.tekhn.nauk

Comparative study of the group hydrocarbon composition of Borislav ceresin from adsorption and sulfuric acid refining. Nauch.zap.-Ukrniiproekta no.4:121-131 '61. (MIRA 15:1)
(Borislav region--Ceresin)

APPROVED FOR RELEASE: 07/13/2001 CIA-RDP86-00513R001549110017-2"

"APPROVED FOR RELEASE: 07/13/2001 CIA-RDP86-00513R001549110017-2

RUDAKOVA, N.Ya., kand.tekhn.nauk; POLISHCHUK, S.A., kand.tekhn.nauk; SHEREMETA, B.K., kand.tekhn.nauk; GAMOLINA, L.N., inzh.; STANITSKAYA, Z.N., inzh.; GERMASH, E.A., inzh.; VASIL'YEVA, Z.N., inzh.

Possibility of production of transformer oils from the petroleum of the Okhinskiy and Katangli fields. Nauch.zap.Ukrniiproekta no.8:64-70 '62. (MIRA 16:1)
(Insulating oils) (Petroleum--Refining)

APPROVED FOR RELEASE: 07/13/2001 CIA-RDP86-00513R001549110017-2"

"APPROVED FOR RELEASE: 07/13/2001 CIA-RDP86-00513R001549110017-2

RUDAKOVA, N.Ya., kand. tekhn. nauk; SHEREMETA, B.K., kand. tekhn. nauk; KOLOSYUK, R.T.; MEL'NIK, A.A.; CHURAKOV, F.I.; KRIMERMAN, S.Z.; BILONIZHKO, A.D.

Obtaining commercial paraffins and fuel oils by the destructive distillation of a heavy paraffin lubricant derived from western Ukraine oils. Neft. i gaz. prom. no.2:53-56 Ap-Je '63. (MIRA 17:11)

1. Gosudarstvennyy nauchno-issledovatel'skiy i proyektnyy institut ugol'noy, rudnoy, neftyanoy i gazovoy promyshlennosti UkrSSR (for Kolosyuk). 2. Pervyy drogobychskiy neftepererabatyvayushchiy zavod (for Mel'nik, Churakov, Krimerman, Bilonizhko).

APPROVED FOR RELEASE: 07/13/2001 CIA-RDP86-00513R001549110017-2"

"APPROVED FOR RELEASE: 07/13/2001 CIA-RDP86-00513R001549110017-2

ACCESSION NR: AP4026849 S/0065/64/000/004/0022/0026

AUTHORS: Rudakova, N.Ya.; Sheremeta, B.K.; Kvyatkovskaya, T.A.; Kolosyuk, R.G.

TITLE: Extension of raw material resources for paraffins based on Ukrainian paraffinic petroleums.

SOURCE: Khimiya i tekhnologiya topliv i masel, no. 4, 1964, 22-26

TOPIC TAGS: paraffinic petroleum, Ukrainian petroleum, paraffin production, low melting paraffin, raw material resource, diesel fuel distillate, vacuum gas oil distillate, selective solvent, extraction, carbamide process, deparaffination

ABSTRACT: Studies were made to confirm the possibility of producting in Ukrainian petroleum processing plants low melting paraffins from distillates from diesel fuels, vacuum gas oil and filtrates, and run-off from the manufacture of paraffins by filter pressing and sweating. The low melting paraffins may be obtained by extraction with selective solvents or with carbamides. Mixtures of benzene with acetone, dichloroethane or methylethylketone were investigated

Card 1/2

APPROVED FOR RELEASE: 07/13/2001 CIA-RDP86-00513R001549110017-2"

"APPROVED FOR RELEASE: 07/13/2001 CIA-RDP86-00513R001549110017-2

ACCESSION NR: AP4026849

as selective solvents; a 40:60 benzene:acetone mixture to be used in a 3:1 ratio for diesel fuel and 5:1 for the filtrates and run-off was found most effective. The products obtained by the two methods have different physical chemical properties due to the more extensive extraction of paraffins with the carbamide process (10.78% separation as compared to 5.77% for selective solvents). Presently 4-4.5% solid paraffins, based on the petroleum, are extracted. The production of lubricating oils based on these deparaffinated fractions can be arranged. Considering the power and technological equipment in Ukrainian petroleum processing plants, deparaffination of the paraffin in the distillates using selective solvents is more realistic and promising than by using the carbamide method. "Experimental work was carried out with the participation of Z.N. Stanitsk, E.A. Germash, S,I. Oleksin." Orig. art. has: 4 tables.

ASSOCIATION: UkrNII

SUBMITTED: 00

DATE ACQ: 28Apr64

ENCL: 00

SUB CODE: FL

NR REF SOV: 004

OTHER: 000

Card 2/2

APPROVED FOR RELEASE: 07/13/2001 CIA-RDP86-00513R001549110017-2"

"APPROVED FOR RELEASE: 07/13/2001 CIA-RDP86-00513R001549110017-2

L 45939-66 EWT(m)/T WE/GD

ACC NR: AT6020586 SOURCE CODE: UR/0000/65/000/000/0029/0035

AUTHOR: Rudakova, N. Ya.; Sheremeta, B. K.; Ostrovskaya, Z. N.; Kvyatkovskaya, T. A.

ORG: UkrNIIgiproneft'

37
36
B+1

TITLE: Comparative dewaxing of diesel distillates of Dolina and Bitki petroleum for the purpose of obtaining low-melting waxes suitable for oxidation to synthetic fatty acids and synthetic fatty alcohols

SOURCE: Neftepererabotka i neftekhimiya (Petroleum refining and petroleum chemistry). Kiev, Naukova dumka, 1965, 29-35

TOPIC TAGS: dewaxing, diesel fuel, fatty acid, acetone, benzene

ABSTRACT: Diesel distillates of Dolina and Bitki petroleum were dewaxed by three methods: a low-temperature process involving the use of selective solvents (mixtures of acetone and benzene and also methyl ethyl ketone and benzene), a low-temperature process without solvents at a cooling temperature down to -20°C, and treatment with crystalline carbamide. The two types of petroleum were found to be very similar in physicochemical properties and content of diesel fractions. The 240-350°C fraction is best suited for producing low-melting paraffin waxes to be oxidized to synthetic fatty alcohols. Dewaxing with selective solvents, aimed at producing low-melting waxes, should be carried out in two stages, i. e., dewaxing of diesel distillates and deoiling of the wax cake. The optimum solvent is a mixture of 80% acetone and 20% benzene.

Card 1/2

APPROVED FOR RELEASE: 07/13/2001 CIA-RDP86-00513R001549110017-2"

"APPROVED FOR RELEASE: 07/13/2001 CIA-RDP86-00513R001549110017-2

ACC NR: AT6020586

Mixing of dewaxed 240-350°C and 200-240°C fractions produces diesel fuels with solidification points of -26 to 28°C which meet the GOST requirements for DS diesel fuels. It is concluded that the method of low-temperature selective dewaxing of diesel fuels is the most suitable for adoption by Ukrainian petroleum refineries in the immediate future for purposes of petrochemical synthesis and production of cold diesel fuels. Orig. art. has: 5 tables.

SUB CODE: 11/ SUBM DATE: 01Dec65/ ORIG REF: 001

Card 2/2

APPROVED FOR RELEASE: 07/13/2001 CIA-RDP86-00513R001549110017-2"

"APPROVED FOR RELEASE: 07/13/2001 CIA-RDP86-00513R001549110017-2

L 45938-66 EWT(m)/T WE/GD

ACC NR: AT6020587 SOURCE CODE: UR/0000/65/000/000/0036/0042

AUTHOR: Rudakova, N. Ya.; Polishchuk, S. A.; Sheremeta, B. K.; Sereda, Z. Ya.

ORG: UkrNIIgiproneft'

38

B+1

TITLE: Physicochemical properties and group composition of petroleum from Oktyabr' field

SOURCE: Neftepererabotka i neftekhimiya (Petroleum refining and petroleum chemistry). Kiev, Naukova dumka, 1965, 36-42

TOPIC TAGS: diesel fuel, gasoline

ABSTRACT: In order to study the physicochemical properties of narrow fractions of Oktyabr' petroleum, the latter was distilled on an ARN-1 unit up to 220°C at atmospheric pressure and under vacuum above that temperature. Analysis showed a high content of low-octane gasoline fractions (50.66% up to 200°C) of low detonation stability. The 85-200°C fraction is recommended for use as stock for catalytic reforming in the production of high-octane gasoline. From the 120-220°C fraction, TS-1 fuel meeting all GOST requirements except the content of aromatic hydrocarbons can be obtained; DL diesel fuel corresponding to GOST standards in all characteristics can be obtained from the 220-350°C fraction, and DZ diesel fuel satisfying all the GOST requirements is obtained from the 170-300°C fraction. The 300-350°C fraction may be used as a component of DL diesel fuel. The residue of the distillation of Oktyabr' petroleum up to

Card 1/2

APPROVED FOR RELEASE: 07/13/2001 CIA-RDP86-00513R001549110017-2"

"APPROVED FOR RELEASE: 07/13/2001 CIA-RDP86-00513R001549110017-2

ACC NR: AT6020587

380°C amounts to 5% of its weight and may be used as cracking stock. Orig. art. has: 4 tables.

SUB CODE: 11/ SUBM DATE: 01Dec65

Card 2/2

APPROVED FOR RELEASE: 07/13/2001 CIA-RDP86-00513R001549110017-2"

"APPROVED FOR RELEASE: 07/13/2001 CIA-RDP86-00513R001549110017-2

S/710/62/000/008/002/003
E075/E436

AUTHORS: Rudakova, N.Ya., Polishchuk, S.A., Sheremeta, B.K., Candidates of Technical Sciences, Gamolina, L.N., Stanitskaya, Z.N., Germash, E.A., Vasil'yeva, Z.N., Engineers

TITLE: The possibility of producing transformer oils from Okha and Katangli crudes

SOURCE: Kiyev. Gosudarstvennyy nauchno-issledovatel'skiy i proyektnyy institut ugol'noy, neftyanoy i gazovoy promyshlennosti. Nauchnyye zapiski. no.8. 1962. Neftepererabotka. 64-70

TEXT: An attempt was made to produce transformer oils satisfying ГОСТ982-56 (GOST 982-56) specification from Okha and Katangli crudes subjected to acid or furfural treatment without dewaxing. The properties of the crudes are given in Table 1. These crudes contain about 50% of oil fractions and can fully satisfy the demand of the Siberian and the Far East regions for transformer oils. A distillate from a mixture of crudes was investigated (2 parts of Okha and 1 part of Katangli crudes) in view of differences in their composition, the Katangli crude containing

Card 1/3

APPROVED FOR RELEASE: 07/13/2001 CIA-RDP86-00513R001549110017-2"

"APPROVED FOR RELEASE: 07/13/2001 CIA-RDP86-00513R001549110017-2

SHEREMETA, N. A.

SHEREMETA, N. A.: "On the fate of transfused heterogenic erythrocytes" (Experimental investigation). L'vov, 1955. L'vov State Medical Inst. (Dissertation for the Degree of Candidate of Medical Sciences)

SO: Knizhnaya Letopis' No. 51, 10 December 1955

APPROVED FOR RELEASE: 07/13/2001 CIA-RDP86-00513R001549110017-2"

"APPROVED FOR RELEASE: 07/13/2001 CIA-RDP86-00513R001549110017-2

SHEREMETA, N.A.; PLATONOV, A.F.

Carcinoid of the appendix vermiformis. Nov.khir.arkh. no.4:78 Jl-Ag '57. (MIRA 10:11)

1. L'vovskiy nauchno-issledovatel'skiy institut perelivaniya krovi)
(APPENDIX (ANATOMY)--TUMORS)

APPROVED FOR RELEASE: 07/13/2001 CIA-RDP86-00513R001549110017-2"

"APPROVED FOR RELEASE: 07/13/2001 CIA-RDP86-00513R001549110017-2

PAL'CHEVSKIY, Ye.I., prof.; SHEREMETA, N.A., kand. med. nauk

Work of the Lvov Province Society of Pathoanatomists in 1955-1956. Arkh.pat. 21 no.1:83-84 '59. (MIRA 12:1)

1. Predsedatel' L'vovskogo oblastnogo obshchestva patologoanatomov (for Pal'chevskiy). 2. Sekretar' L'vovskogo oblastnogo obshchestva patologoanatomov (for Sheremeta).
(LVOV PROVINCE--PATHOANATOMICAL SOCIETIES)

APPROVED FOR RELEASE: 07/13/2001 CIA-RDP86-00513R001549110017-2"

"APPROVED FOR RELEASE: 07/13/2001 CIA-RDP86-00513R001549110017-2

MESHKOV, N.V., prof.; SHEREMETA, N.A., kand.med.nauk

Work of the Lvov Society of Pathoanatomists in 1957-1958. Arkh.pat. 21 no.6:91-93 '59. (MIRA 12:12)

1. Predsedatel' L'vovskogo obshchestva patologoanatomov (for Meshkov).
2. Sekretar' L'vovskogo obshchestva patologoanatomov (for Sheremeta).
(LVOV--PATHOANATOMICAL SOCIETIES)

APPROVED FOR RELEASE: 07/13/2001 CIA-RDP86-00513R001549110017-2"

"APPROVED FOR RELEASE: 07/13/2001 CIA-RDP86-00513R001549110017-2

SHEREMETA, N.A.

Comparative morphology of hypoplastic and aplastic states. Sbor. trud. L'vov. nauch.-issl. inst. perel. krovi i neotlozh. khir. no.4:110-119 '60 (MIRA 16:12)

General hemosiderosis in hypoplastic and aplastic states. Ibid.:120-125

APPROVED FOR RELEASE: 07/13/2001 CIA-RDP86-00513R001549110017-2"

"APPROVED FOR RELEASE: 07/13/2001 CIA-RDP86-00513R001549110017-2

MESHKOV, N.V., prof.; SHEREMETA, N.A., kand.meditsinskikh nauk

Work of the Lvov Society of Pathoanatomists in 1959. Arkh.pat. 22 no.5:89-91 '60. (MIRA 13:9)

1. Predsedatel' L'vovskogo Obshchestva patologoanatomov (for Meshkov).
2. Sekretar' L'vovskogo Obshchestva patologoanatomov (for Sheremeta).
(LVOV—PATHOANATOMICAL SOCIETIES)

APPROVED FOR RELEASE: 07/13/2001 CIA-RDP86-00513R001549110017-2"

"APPROVED FOR RELEASE: 07/13/2001 CIA-RDP86-00513R001549110017-2

SHEREMETA, N. A., kand. med. nauk

Brenner tumor (mucoid fibroepithelioma). Akush. i gin. 38 no.3: 116-117 My-Je '62. (MIRA 15:6)

1. Iz patologogistologicheskoy laboratorii L'vovskogo nauchno-issledovatel'skogo instituta perelivaniya krovi (dir. - dotsent D. G. Petrov) i 5-y klinicheskoy bol'nitsy (glavnyy vrach - zasluzhennyy vrach UkrSSR I. I. Khoma)

(OVARIES--TUMORS)

APPROVED FOR RELEASE: 07/13/2001 CIA-RDP86-00513R001549110017-2"

"APPROVED FOR RELEASE: 07/13/2001 CIA-RDP86-00513R001549110017-2

[illegible], Ye.[illegible], prof.; SHEREMETA, N.A., starshiy nauchnyy sotrudnik

Work of the Lvov Scientific Society of Pathologists in 1962. Arkh. pat. 26 no.5:88-91 '64. (MIRA 18:1)

1. Predsedatel' L'vovskogo nauchnogo obshchestva patologoanatomov (for Pal'chevskiy). 2. Sekretar' L'vovskogo nauchnogo obshchestva patologoanatomov (for Sheremeta).

APPROVED FOR RELEASE: 07/13/2001 CIA-RDP86-00513R001549110017-2"

"APPROVED FOR RELEASE: 07/13/2001 CIA-RDP86-00513R001549110017-2

[illegible] of heterotrophic hyperplastic processes [illegible] Sovet. i parel. krovi 1:199-202 '65. (MIRA 18:10)

[illegible] institut [illegible] krovi.

APPROVED FOR RELEASE: 07/13/2001 CIA-RDP86-00513R001549110017-2"

"APPROVED FOR RELEASE: 07/13/2001 CIA-RDP86-00513R001549110017-2

SHEREMETA, N.S., inzhener; TOVAROV, V.V., kandidat tekhnicheskikh nauk.

Reconstructing the journals of raw material mills. TSement 20 no.5: 26-27 S-O '54. (MLRA 7:11)
(Milling machinery)

APPROVED FOR RELEASE: 07/13/2001 CIA-RDP86-00513R001549110017-2"

"APPROVED FOR RELEASE: 07/13/2001 CIA-RDP86-00513R001549110017-2

101-58-3-8/12

AUTHOR: Sheremeta, N.S.

TITLE: The Arrangement of Dust Exhausters in the Niicgaz System (O komponovke batareynykh tsiklonov sistemy Niicgaz)

PERIODICAL: Tsement, 1958, Nr 3, pp 28-29 (USSR)

ABSTRACT: The article deals with dust exhausters for air cleaning in cement mills used at the Karadag Cement Plant. Since the exhausters did not operate satisfactorily, the mills had to be stopped frequently for cleaning, which involves a 20 - 25% productivity decrease. Careful investigations of the setup and the functioning of the exhauster system revealed that the existing arrangement in two rows was impractical, as the horizontal pipes connecting them with the collector were frequently blocked by cement. In 1956, the dust exhausters arrangement was changed by placing them in a semicircle around the collector. This arrangement gave satisfactory results, since the long pipe connections were now eliminated and the productivity of the mills rose by 25 %.

Card 1/2

APPROVED FOR RELEASE: 07/13/2001 CIA-RDP86-00513R001549110017-2"

"APPROVED FOR RELEASE: 07/13/2001 CIA-RDP86-00513R001549110017-2

101-58-3-8/12

The Arrangement of Dust Exhausters in the Niiogaz System

There is one set of diagrams

ASSOCIATION: Karadagskiy tsementnyy zavod (Karadag Cement Plant)

1. Industrial plants 2. Dust--Control systems

Card 2/2

APPROVED FOR RELEASE: 07/13/2001 CIA-RDP86-00513R001549110017-2"

"APPROVED FOR RELEASE: 07/13/2001 CIA-RDP86-00513R001549110017-2

SHEREMETA, P.F.

Metal molds for large aluminum reels. Lit.proizv. no.3:45 Mr '62. (MIRA 15:3)

(Molding (Founding))

APPROVED FOR RELEASE: 07/13/2001 CIA-RDP86-00513R001549110017-2"

"APPROVED FOR RELEASE: 07/13/2001 CIA-RDP86-00513R001549110017-2

BUROV, V.S.; SHEREMETA, V.G.

Lagoonal and continental Sarmatian sediments near Velikiy Rakovets in Transcarpathia. Geol. sbor. [Lvov] no.4:178-181 '57. (MIRA 13:2)

1. L'vovskiy gosuniversitet imeni Ivana Franko.
(Transcarpathia--Geology, Stratigraphic)

APPROVED FOR RELEASE: 07/13/2001 CIA-RDP86-00513R001549110017-2"

"APPROVED FOR RELEASE: 07/13/2001 CIA-RDP86-00513R001549110017-2

SHEREMETA, V.G.

Stratigraphic position of the coal-bearing stratum near the village Berezinka in the Transcarpathian Province of the Ukrainian S.S.R. Dop. ta pov. L'viv. un. no.7 pt.3; 154-156 '57. (MIRA 11:2)
(Berezinka Region--Geology, Stratigraphic)
(Berezinka Region--Ostracoda, Fossil)

APPROVED FOR RELEASE: 07/13/2001 CIA-RDP86-00513R001549110017-2"

"APPROVED FOR RELEASE: 07/13/2001 CIA-RDP86-00513R001549110017-2

Pannonian

[illegible] V.I., [illegible] "[illegible]" [illegible]

[illegible] Smith [illegible] [illegible]." [illegible]

[illegible] SSR.

[illegible] 5 [illegible]

APPROVED FOR RELEASE: 07/13/2001 CIA-RDP86-00513R001549110017-2"

"APPROVED FOR RELEASE: 07/13/2001 CIA-RDP86-00513R001549110017-2

SHEREMETA, V.G. [Sheremeta, V.H.]

Pliocene stratigraphy of Transcarpathia, based on the study of Ostracods. Pyt.geol. no.9:70-86 '58. (MIRA 13:4)
(Transcarpathia--Ostracoda, Fossil)

APPROVED FOR RELEASE: 07/13/2001 CIA-RDP86-00513R001549110017-2"

"APPROVED FOR RELEASE: 07/13/2001 CIA-RDP86-00513R001549110017-2

BUROV, V.S.; SHEREMETA, V.G. [Sheremeta, V.H.]

Stratigraphy and conditions of deposition of sediments of the Chop series in Transcarpathia. Geol.zhur. 18 no.4:98-102 '58. (MIRA 12:1)

(Transcarpathia--Geology, Stratigraphic)

APPROVED FOR RELEASE: 07/13/2001 CIA-RDP86-00513R001549110017-2"

"APPROVED FOR RELEASE: 07/13/2001 CIA-RDP86-00513R001549110017-2

BUROV, V.S.;SHEREMETA, V.G.

Upper Pliocene formations in Soviet Transcarpathia. Izv. vys. ucheb. zav.; geol. i razv. 2 no.7:50-59 Jl '59 (MIRA 13:3)

1. L'vovskiy gosudarstvennyy universitet im. Iv. Franko.
(Transcarpathia--Geology)

APPROVED FOR RELEASE: 07/13/2001 CIA-RDP86-00513R001549110017-2"

"APPROVED FOR RELEASE: 07/13/2001 CIA-RDP86-00513R001549110017-2

SHEVCHENKO, V.G.

Some new species of ostracods from Sarmatian and Pannonian sediments of Transcarpathia. Paleont.sbor. [Lvov] no.1:113-120 '61. (MIRA 15:9)

1. Gosudarstvennyy universitet imeni Ivana Franko, L'vov.
(Transcarpathia--Ostracoda, Fossil)

APPROVED FOR RELEASE: 07/13/2001 CIA-RDP86-00513R001549110017-2"

"APPROVED FOR RELEASE: 07/13/2001 CIA-RDP86-00513R001549110017-2

SEMENENKO, V.M.; SHEREMETA, V.G., [Sheremeta, V.H.]

New data on the time of the formation of Pliocene sediments in the southern part of the Ukraine. Geol. zhur. 23 no.5:80-84 '63. (MIRA 16:12)

1. Institut geologicheskikh nauk AN UkrSSR i L'vovskiy gosudarstvennyy institut im I.Franko.

APPROVED FOR RELEASE: 07/13/2001 CIA-RDP86-00513R001549110017-2"

"APPROVED FOR RELEASE: 07/13/2001 CIA-RDP86-00513R001549110017-2

SEMENENKO, V.N. [Semenenko, V.M.]; SHEREMETA, V.G. [Sheremeta, V.H.]

Ostracods of the Kuyalnik stage of the Black Sea basin. Dop. AN URSR no.5:637-640 '65. (MIRA 18:5)

1. Institut geologicheskikh nauk AN UkrSSR i L'vovskiy universitet.

APPROVED FOR RELEASE: 07/13/2001 CIA-RDP86-00513R001549110017-2"

"APPROVED FOR RELEASE: 07/13/2001 CIA-RDP86-00513R001549110017-2

SHEREMETA, Yu.G.

Trends in the mechanization and automatization of the manufacture of artificial soft leather. Kozh.-obuv.prom. 2 no.10:10-11 O '60. (MIRA 13:11)

(Leather, Artificial)

APPROVED FOR RELEASE: 07/13/2001 CIA-RDP86-00513R001549110017-2"

"APPROVED FOR RELEASE: 07/13/2001 CIA-RDP86-00513R001549110017-2

SHEREMETEV, Anatoliy Vladimirovich; ZHITKEVICH, Rimma Grigor'yevna; SHVARTSMAN, V.O., otv. red.; BOGACHEVA, G.V., red.; SLUTSKIN, A.A., tekhn. red.

[Use of mathematical statistics methods for treating the results of the measurement of electrical characteristics] Obrabotka rezul'tatov izmerenii elektricheskikh kharakteristik metodami matematicheskoi statistiki. Moskva, Gos. izd-vo lit-ry po voprosam sviazi i radio, 1961. 36 p. (MIRA 14:11)

(Information theory)

APPROVED FOR RELEASE: 07/13/2001 CIA-RDP86-00513R001549110017-2"

"APPROVED FOR RELEASE: 07/13/2001 CIA-RDP86-00513R001549110017-2

GORNSHTEYN, I.L., starshiy inzh.; SHEREMETEV, A.V., kand.tekhn.nauk

Remote control servicing of wire communication amplifying stations. Vest. sviazi 21 no.1:5-7 Ja '61. (MIRA 15:5)

1. Kiyevskoye otdeleniye TSentral'nogo nauchno-issledovatel'skogo instituta svyazi Ministerstva svyazi SSSR.
(Telecommunication) (Remote control)

APPROVED FOR RELEASE: 07/13/2001 CIA-RDP86-00513R001549110017-2"

"APPROVED FOR RELEASE: 07/13/2001 CIA-RDP86-00513R001549110017-2

GRISHKO, N.A.; SHEREMETEV, A.V.; ROZOVSKAYA, M.I., otv. red.; CHESNOKOVA, T.V., red.; ROMANOVA, S.F., tekhn. red.

[VUS-12-2 auxiliary repeater stations]Vspomogatel'nye usilitel'nye stantsii VUS-12-2. Moskva, Sviaz'izdat, 1962. 62 p. (MIRA 16:4)

(Telephone)

APPROVED FOR RELEASE: 07/13/2001 CIA-RDP86-00513R001549110017-2"

"APPROVED FOR RELEASE: 07/13/2001 CIA-RDP86-00513R001549110017-2

SHEREMETEV, B.

The Sh-17 two-seater glider. Kryl.rod. 2 no.10:20-21 O '51
(Gliders (Aeronautics)) (MLRA 8:8)

APPROVED FOR RELEASE: 07/13/2001 CIA-RDP86-00513R001549110017-2"

"APPROVED FOR RELEASE: 07/13/2001 CIA-RDP86-00513R001549110017-2

AID P - 274

Subject : USSR/Aeronautics

Card : 1/3

Periodical : Kryl. Rod., 7, 1-24, Jy 1954

Abstract : One article from this issue has been processed on a separate card as AID P - 273. The remainder are listed only on the following Table of Contents:

	PAGES
1. Aeroclub, the Center of Sport-Aviation Work	1
2. Semenov, M., The Reliable Support of the DOSAAF Committee (photo)	2-3
3. Shumilov, V., The New Flight Altitude Record (account of the establishment of a new USSR national altitude record on the YaK-18 for aircraft of the second weight category, photo)	4
4. Sheremetev, B., Designer, The Glider - "Kashuk" (description and diagrams of a glider with flapping wings) processed on separate card	5-6

APPROVED FOR RELEASE: 07/13/2001 CIA-RDP86-00513R001549110017-2"

"APPROVED FOR RELEASE: 07/13/2001 CIA-RDP86-00513R001549110017-2

AID P - 274

Kryl. Rod., 7, 1-24, Jy 1954 (additional card)

Card : 2/3

	PAGES
5. Judging Exercises on the Technique of Piloting	6-7
6. Mavrichev, V., Soaring in Thermal Air-Currents and under Clouds in a Two-seater Training Glider	7-8
7. Zhornik, D., Parachute Jumping Tower (basic information on parachute jumping and parachute jumping towers, diagrams)	9-11
8. New Airports (several new airports listed, photo of Kabarovsk airport)	11
9. Kumanin, V., Flying Model with Wing Slots (diagrams and graphs)	12
10. Zarechnev, A., Synchronization of Aviation Model Engine Work (diagrams)	13-14
11. Grigorenko, A., Jig for Assembling Surfaces of Flying Models (diagram)	14
12. Dmitrevskiy, N., Breaking Away from Basic Organizations (complaints)	15
13. Leshkovtsev, V., The Atomic Explosion and its Consequences (diagram)	16-17

APPROVED FOR RELEASE: 07/13/2001 CIA-RDP86-00513R001549110017-2"

"APPROVED FOR RELEASE: 07/13/2001 CIA-RDP86-00513R001549110017-2

AID P - 273

Subject : USSR/Aeronautics

Card : 1/1

Author : Sheremetev, B., Designer

Title : The Glider "Kashuk"

Periodical : Kryl. Rod., 7, 5 - 6, Jy 1954

Abstract : This glider with flapping wings was designed by Manotskov, A. Yu., Engineer, in 1952. Its wings are flexibly mounted, and allow a total displacement of wing tips of 2600 mm. The glider was built for experimental purposes. Photos and diagrams.

Institution : None

Submitted : No date

APPROVED FOR RELEASE: 07/13/2001 CIA-RDP86-00513R001549110017-2"

"APPROVED FOR RELEASE: 07/13/2001 CIA-RDP86-00513R001549110017-2

SHEREMETEV, B.

SIMONOV, V., master sporta; SHEREMETEV, B., konstruktor.

What kind of gliders does the All-Union Volunteer Society for Assistance to the Army, Air Force and Navy need? Kryl.rod.6 no.1:11-13 Ja '55. (MLRA 8:3)
(Gliders (Aeronautics))

APPROVED FOR RELEASE: 07/13/2001 CIA-RDP86-00513R001549110017-2"

"APPROVED FOR RELEASE: 07/13/2001 CIA-RDP86-00513R001549110017-2

AID P - 5288

Subject : USSR/Aeronautics - Gliders

Card 1/1 Pub. 58 - 6/11

Author : Sheremetev, B., Designer

Title : Glider Sh-18

Periodical : Kryl. rod., 9, 13-14, S 1956

Abstract : Technical description of the construction of the new Soviet glider Sh-18, containing indications as to the glider's flying characteristics. 1 photo and 1 drawing.

Institution : None

Submitted : No date

APPROVED FOR RELEASE: 07/13/2001 CIA-RDP86-00513R001549110017-2"

"APPROVED FOR RELEASE: 07/13/2001 CIA-RDP86-00513R001549110017-2

KOSTENKO, Igor' Konstantinovich; SIDOROV, Orest Aleksandrovich; SHEREMETEV, Boris Nikolayevich; YEFREMOVA, Ye.V., red.; BLAZHENKOVA, G.I., tekhn.red.

[Foreign gliders] Zarubezhnye planery. Moskva, Izd-vo DOSAAF, 1959. 159 p. (MIRA 13:2)
(Gliders (Aeronautics))

APPROVED FOR RELEASE: 07/13/2001 CIA-RDP86-00513R001549110017-2"

"APPROVED FOR RELEASE: 07/13/2001 CIA-RDP86-00513R001549110017-2

PHASE I BOOK EXPLOITATION SOV/5498

Sheremetev, Boris Nikolayevich

Planery (Gliders) Moscow, DOSAAF, 1959. 217 p. Errata slip inserted. 10,700 copies printed.

Ed. (Title page): N. N. Fadeyev, Candidate of Technical Sciences; Ed.: A. A. Vasil'yev; Tech. Ed.: M. S. Karyakina.

PURPOSE : This book is intended for the general reader interested in gliders and sport flying.

COVERAGE: The book presents basic information on gliders, with particular attention given to their design and classification. Various types of training and record-breaking gliders and their technical data are discussed. The last chapter outlines future trends in glider design. No personalities are mentioned. There are no references.

TABLE OF CONTENTS:

Card 1/4

APPROVED FOR RELEASE: 07/13/2001 CIA-RDP86-00513R001549110017-2"

"APPROVED FOR RELEASE: 07/13/2001 CIA-RDP86-00513R001549110017-2

ZAMYATIN, V.; SHEREMETEV, B.

Motor gliders. Kryl. rod. 15 no.10:26-27 O '64. (MIRA 18:1)

APPROVED FOR RELEASE: 07/13/2001 CIA-RDP86-00513R001549110017-2"

"APPROVED FOR RELEASE: 07/13/2001 CIA-RDP86-00513R001549110017-2

ALYSHEV, M.Ya., inzhener; SHEREMETEV, G.V., inzhener.

Prospects for farm electrification. Nauka i pered. op. v sel'khoz. 6 no.11:7-11 N '56. (MLRA 10:1)
(Rural electrification)

APPROVED FOR RELEASE: 07/13/2001 CIA-RDP86-00513R001549110017-2"

"APPROVED FOR RELEASE: 07/13/2001 CIA-RDP86-00513R001549110017-2

SHEREMETEV, G.V., inzh. (Moskva)

Determination of a zone for centralized power supply of rural areas and problems concerning the choice of power sources from beyond this zone. Elektrichestvo no.3:5-9 Mr '63. (MIRA 16:4)
(Rural electrification) (Electric power distribution)

APPROVED FOR RELEASE: 07/13/2001 CIA-RDP86-00513R001549110017-2"

"APPROVED FOR RELEASE: 07/13/2001 CIA-RDP86-00513R001549110017-2

SHEREMETEV, N.S.

Assembly of cyclone banks of a system devised by the Scientific Research Institute of Gas Purification. TSement 24 no.3:28-29 My-Je '58. (MIRA 11:8)

1. Karagadskiy tsementnyy zavod.
(Cement plants—Design and construction)
(Air—Purification)
(Separators (Machines))

APPROVED FOR RELEASE: 07/13/2001 CIA-RDP86-00513R001549110017-2"

"APPROVED FOR RELEASE: 07/13/2001 CIA-RDP86-00513R001549110017-2

PROCESSES AND PROPERTIES INDEX

Obtaining bornyl chloride. E. N. Rostovskii and T. V. Sheremeteva. *Plasticheskie Massui* 1935, No. 3, 33-4.
Bornyl chloride can be prepd. without decrease in yield by satg. pinene with HCl at 90°. Cu and Pb surfaces cause a smaller yield at this temp., and are themselves corroded unless they are coated with lacquer. H. M. Leicester

ASM-SLA METALLURGICAL LITERATURE CLASSIFICATION

APPROVED FOR RELEASE: 07/13/2001 CIA-RDP86-00513R001549110017-2"

"APPROVED FOR RELEASE: 07/13/2001 CIA-RDP86-00513R001549110017-2

[illegible], [illegible]

Mor., Lab. Organic Chemistry, Moscow Order Lenin State Univ. im. M. V. Lomonosov, -1943-. "On Certain New Derivatives of 4-Phenyl-Camphor," Dok. AN, [illegible], No. 4, 1943; "Investigations in the Field of Phenyl Camphor and Its Derivatives: IV. Some Derivatives of 4-Phenyl Camphor," Zhur. Obshch., Khim., 17, No. 2, 1947.

APPROVED FOR RELEASE: 07/13/2001 CIA-RDP86-00513R001549110017-2"

"APPROVED FOR RELEASE: 07/13/2001 CIA-RDP86-00513R001549110017-2

CA

10

Phenylcamphor and its derivatives. IV. Some derivatives of 4-phenylcamphor. S. S. Nametkin and T. V. Sheremeteva (Moscow State Univ.). *J. Gen. Chem. (U.S.S.R.)* 17, 335-42(1947); cf. C.A. 37, 6957*. A simplified synthesis and some derivs. of 4-phenylcamphor (I) are given. After the reaction of camphor with PhMgBr and steam distn. of the unreacted camphor the residual mixt. of Ph_2, tertiary phenylbornyl alc., and phenylcamphene was not sepd.; it was instead heated with $KHSO_4$ to complete the dehydration of the tertiary alc. and the mixt. of Ph_2 and phenylcamphene was treated with AcOH according to Bertram and Wahlbaum, after which the secondary phenylisobornyl acetate is readily sepd. in solid state and m. 87° (from EtOH); yield on camphor 7%. I treated with HCONAm in the presence of Na in Et_2O with cooling, then heated to 35-40°, treated with H_2O, and freed of solvents gave about 10% *4-phenyl-3-(hydroxymethylene)camphor* (II), m. 50-4°, after acidification by AcOH, followed by purification through the *Na salt*; *Bz deriv.* m. 149-50° (from dil. EtOH). II, allowed to stand 2 months in AcOH and evapd., gave *4-phenyl-3-formylcamphor*, m. 91-5° (from petr. ether). II with 1% weakly alk. KMnO, in the cold gave *4-phenylcamphorquinone*, m. 142-3° (from dil. EtOH), golden yellow. *4-(p-Aminophenyl)camphor*, m. 142-5°, was prepd. by reduction of the NO_2 compd. with Zn dust in AcOH; repeated reduction and purification through the H_2SO_4 salt gave the pure product, colorless, m. 144-5.5° (from EtOH). *I, deriv.*, m. 181-2° (from EtOH), from the NH_2 compd. and AcOH on heating. The NH_2 compd. (2.5 g.) was diazotized and allowed to stand 20 days at room temp.; the solid ppt. was periodically collected and after crystn. from benzene-petr. ether gave 18%, *4-(p-hydroxyphenyl)camphor*, m. 124.5-5°; *Bz deriv.* m. 175-6° (from dil. EtOH). I, heated to 35-40° with 5 parts of H_2SO_4, H_2O several hrs., the excess H_2SO_4 removed by $Pb(OAc)_2$, the filtrate evapd. to dryness, then the Pb salt recrystd. from EtOH freed of Pb by H_2S, and the filtrate evapd. to dryness gave *4-p-sulfophenylcamphor*, colorless powder, m. 180-90° (from $CHCl_3$). *Ba salt*, by neutralization of the sulfonation soln. by $Ba(OH)_2$, treatment with CO_2, and evapn. of the filtrate, colorless needles (with $6H_2O$), loses water at 110-15°. *Pb salt* (prepd. as above) forms an octahydrate, which loses water at 120°. 4-(p-Nitrophenyl)camphor (1.5 g.) heated with 5 cc. Ac_2O and 1.5 g. SeO_2 to 140-50° 6 hrs., filtered hot, and cooled gave 82%, *4-(p-nitrophenyl)camphorquinone*, golden yellow, m. 136.5-7° (from AcOH). G. M. Kosolapoff

ASM-SLA METALLURGICAL LITERATURE CLASSIFICATION

APPROVED FOR RELEASE: 07/13/2001 CIA-RDP86-00513R001549110017-2"

"APPROVED FOR RELEASE: 07/13/2001 CIA-RDP86-00513R001549110017-2

Sheremeteva, T. V.

Calculation of the degree of transformation of high-molecular compounds in preparation of their derivatives. T. V. Sheremeteva. *J. Appl. Chem. U.S.S.R.* 26, 497–500 (1953) (Engl. translation).—See *C.A.* 47, 10271a.

H. L. H.

NA

APPROVED FOR RELEASE: 07/13/2001 CIA-RDP86-00513R001549110017-2"

"APPROVED FOR RELEASE: 07/13/2001 CIA-RDP86-00513R001549110017-2

[illegible], I.N.; [illegible]EVA, [illegible]; [illegible]KOVA, [illegible].

Heterocyclic compounds. Part 4[illegible]. 1-carbalcoxyalkyl-2,5-dimethyl-piperidons. Zhur.ob.[illegible] 12 3510-3515 D '56. (MLRA 10:7)

1. Moskovskiy institut tonkoy khimicheskoy tekhnologii imeni M.V. Lomonosova.

(Piperidone)

APPROVED FOR RELEASE: 07/13/2001 CIA-RDP86-00513R001549110017-2"

"APPROVED FOR RELEASE: 07/13/2001 CIA-RDP86-00513R001549110017-2

SHEREMET'EVA, T. V.

Distr: 4E4j/4E2c(j)

Synthesis and polymerization of *p-tert*-butylphenyl methacrylate. I. M. M. Koton, T. V. Sheremet'eva, and M. G. Zhenevskaya (High Polymer Inst., Leningrad). *Izvest. Akad. Nauk S.S.S.R., Otdel. Khim. Nauk* 1957, 826–7.—*p*-$Me_3CC_6H_4OH$ with CH_2:CMeCOCl gave *p*-$Me_3CC_6H_4O_2CCMe$:CH_2, b_4 131–2°, m. 34.5–5°. This was polymerized under N with 0.1–5% Bz_2O_2 at 60–120° over 4 days. The product is a glassy solid polymer obtained in 90% yield with 10% low polymer. The ester polymerizes much more rapidly than does CH_2:$CMeCO_2Me$ (kinetic curves shown). The considerable residual monomer and low polymer formed in polymerization of this ester is ascribed to steric hindrance produced by the Me_3C group.

G. M. Kosolapoff

5
2 mag
2
1/1

APPROVED FOR RELEASE: 07/13/2001 CIA-RDP86-00513R001549110017-2"

"APPROVED FOR RELEASE: 07/13/2001 CIA-RDP86-00513R001549110017-2

Sheremeteva, T. V.

7 6

Polymerization of *p-tert*-butylphenylmethacrylate. S. R. Bresler, T. V. Sheremeteva, S. Ya. Frenkel, and M. G. Zhenevskaya (Inst. Macromol. Compds., Leningrad). *Zhur. Fiz. Khim.* 31, 109-16(1957)(English summary).—Tests were made to det. the polymerization rate of the *p-tert*-butylphenylmethacrylate at 70-120°, with mol.-wt. detn. of the polymer obtained under different polymerization conditions, in order to increase the polymerization depth and to relate the polymer properties to the polymerization conditions. A comparison of the polymerization curve and the mol.-wt. distribution indicated the importance of secondary reactions of the macromol. radicals, which can result in random-branched structures. These reactions can be suppressed by sufficiently rapid polymerization, which would assure a sufficiently rapid viscosity rise. The chain structure can, therefore, be regulated by selecting suitable polymerization conditions. In this way the strength, brittleness, and heat resistance of the polymerizate can also be regulated. W. M. Sternberg

4E4j-1

APPROVED FOR RELEASE: 07/13/2001 CIA-RDP86-00513R001549110017-2"

"APPROVED FOR RELEASE: 07/13/2001 CIA-RDP86-00513R001549110017-2

5(3)

AUTHORS: Sheremeteva, T. V., Trushkova, T. A. SOV/20-122-5-22/56

TITLE: A New Technique of Production of the N-Methylimide of Citraconic Acid (Novyy method polucheniya N-metilimida tsitrakonovoy kisloty)

PERIODICAL: Doklady Akademii nauk SSSR, 1958, Vol 122, Nr 5, pp 828-830 (USSR)

ABSTRACT: As the first author has proved (Ref 1), alkylimides of citraconic acid, which so far have not been described, can be produced in a way analogous to the synthesis of the alkylimides of maleic acid (Ref 2). A pattern is given. As the temperature of dehydration of 160-200° (see Ref 2) leads to a considerable resinification and to a low (40 %) yield of alkyl-citraconimides (i. e. 24-32 % of the citraconic anhydride), the authors have reduced the temperature of reaction to 130-140°. This increased the yield of imides up to 50-75 % of the amount of amino acid, i. e. 37-50 % of the anhydride, and resinification was reduced. The latter was explained by the authors as a consequence of isomerization of the alkylimides of citraconic acid, in which corresponding derivatives of the itaconic acid

Card 1/3

APPROVED FOR RELEASE: 07/13/2001 CIA-RDP86-00513R001549110017-2"