"APPROVED FOR RELEASE: 08/23/2000 CIA-RDP86-00513R001549620011-2

L 00583-66

ACCESSION NR: AP5021612

which amplifies and limits the high frequency generator voltage and a phase shifter for changing the phase of the limited voltage supplied by the generator. This voltage is a reference for a phase detector which supplies a constant voltage proportional to the phase changes of the amplified voltage from the transducer output. The system also contains an electromagnet creating the field magnetizing the controlled product and a regulating unit establishing the magnitude of the constant current passing through the electromagnet depending on the magnitude of the voltage from the phase detector output.

ASSOCIATION: Tsentral'nyy nauchno-issledovatel'skiy institut tekhnologii i mashinostroyeniya (Central Scientific Research Institute of Technology and Machine Construction)

SUBMITTED: 09Apr64 ENCL: 00 SUB CODE: SS, MT

NO REF SOV: 000 OTHER: 000

Card 2/2

APPROVED FOR RELEASE: 08/23/2000 CIA-RDP86-00513R001549620011-2"

"APPROVED FOR RELEASE: 08/23/2000 CIA-RDP86-00513R001549620011-2

L 4093-66 EWT(1)/EWA(h)

ACC NR: AP5024987 SOURCE CODE: UR/0286/65/000/016/0048/0048

21
B

INVENTOR: Deniskin, V. P.; Shkarlet, Yu. M.
ORG: none

TITLE: Contactless phase inverter. Class 21, No. 173819 [announced by Organization of the State Committee on Radio Electronics, SSSR (Organizatsiya gosudarstvennogo komiteta po radioelektronike SSSR)]

SOURCE: Byulleten' izobreteniy i tovarnykh znakov, no. 16, 1965, 48

TOPIC TAGS: phase shift, contectless phase shifter 25

ABSTRACT: This Author Certificate introduces a contactless phase inverter consisting of basic and compensating coils mounted beside a sliding support coated with a current conducting material. To increase the stability of the angle of phase shift, the amplitude of the output voltage, and the angle of the phase shift itself, two pairs of spaced basic coils and compensating coils are used. The primary basic coil and accompanying compensating coils are connected in series and out of phase; the second pair is connected in series and in phase. The thickness of the current-conducting layer on the sliding support increases linearly in the direction of the axis of symmetry of the spaced coils. Orig. art. has: 1 figure. [JR]

SUB CODE: EC/ SUBM DATE: 27Dec63/ ORIG REF: 000/ OTH REF: 000/ ATD PRESS: 4179

BVK

Card 1/1 UDC: 621.314.25

APPROVED FOR RELEASE: 08/23/2000 CIA-RDP86-00513R001549620011-2"

"APPROVED FOR RELEASE: 08/23/2000 CIA-RDP86-00513R001549620011-2

L 22724-66 EWT(d)/EWP(c)/EWP(v)/T/EWP(k)/EWP(1)/ETC(m)-6 IJP(c)

ACC NR: AP6002929 SOURCE CODE: UR/0286/65/000/024/0092/0092

AUTHORS: Shkarlet, Yu. M.; Reyfisov, M. G.

ORG: none

19

B

TITLE: An electromagnetic defectoscope. 14 Class 42, No. 177132 [announced by Central Scientific Research Institute of Technology and Mechanical Engineering (Tsentral'nyy nauchno-issledovatel'skiy institut tekhnologii i mashinostroyeniya)]

SOURCE: Byulleten' izobreteniy i tovarnykh znakov, no. 24, 1965, 92

TOPIC TAGS: defectoscope, defect indicator, electromagnetic device, electromagnetic probe

ABSTRACT: This Author Certificate presents an electromagnetic defectoscope which includes an eddy current detector applied to the test item. The design reduces the influence of the change in the gap between the detector and the item being controlled in the operation of the defectoscope. The detector has three coaxially positioned coils (one a feed coil and two measurement coils) shown in Fig. 1. The number of turns and the dimensions of the coils are related as indicated by

Card 1/2

UDC: 620.179.14.05

APPROVED FOR RELEASE: 08/23/2000 CIA-RDP86-00513R001549620011-2"

"APPROVED FOR RELEASE: 08/23/2000 CIA-RDP86-00513R001549620011-2

L 22724-66

ACC NR: AP6002929

$$\frac{W_3}{W_2}\sqrt{\frac{D_3}{D_2}} = \frac{\frac{D_2}{D_1}-0{,}3}{\frac{D_3}{D_1}-0{,}3}$$

Fig. 1. 1 - Feed coil; 2 and 3 - measurement coils.

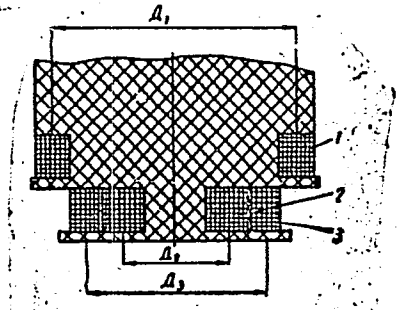

where D_3, W_3 - the diameter and number of turns of one of the measurement coils, D_2, W_2 - the diameter and number of turns of the other measurement coil, D_1 - the diameter of the feed coil. Orig. art. has: 1 figure and 1 formula.

SUB CODE: 09, 13/ SUBM DATE: 11Nov64

Card 2/2 ULR

APPROVED FOR RELEASE: 08/23/2000 CIA-RDP86-00513R001549620011-2"

"APPROVED FOR RELEASE: 08/23/2000 CIA-RDP86-00513R001549620011-2

L 34072-66 EWT(d)/EWA(d)/EWP(v)/T/EWP(k)/EWP(h) IJP(c)

ACC NR: AP6013003 SOURCE CODE: UR/0410/66/000/001/0011/0016

AUTHOR: Sobolev, V.S. (Novosibirsk); Shkarlet, Yu. M. (Moscow)

ORG: none

34
B

14

TITLE: The theory of eddy current quality control [Paper presented at the 7th All-Union Conference on Automatic Control and Methods of Electrical Measurements held in Novosibirsk in September 1965]

SOURCE: Avtometriya, no. 1, 1966, 11-16

TOPIC TAGS: eddy current, nondestructive test, quality control, control theory

ABSTRACT: Although eddy current testing is increasingly used for nondestructive quality control, many aspects of the theory related to the utilization of superposed and screen sensors have not yet been sufficiently developed. The present article derives in detail the density distribution of eddy currents for the general case when the sensing device is located above a conductive n-layer medium. For simplicity, the superposed sensor is substituted by an equivalent current carrying loop. Theoretical results concerning the current density are presented in two diagrams. Orig. art. has: 25 formulas and 3 figures.

SUB CODE: 13 / SUBM DATE: 07Oct65 / ORIG REF: 003

Card 1/1 UDC: 620.179.14.538.54

APPROVED FOR RELEASE: 08/23/2000 CIA-RDP86-00513R001549620011-2"

"APPROVED FOR RELEASE: 08/23/2000 CIA-RDP86-00513R001549620011-2

DUBROVSKIY, V.A.; DUBROVSKAYA, T.S.; SHKARLINSKIY, O.F.

Use of potassium compounds as radioactive indicators in the investigation of glass manufacturing processes. Stek.i ker 19 no.9:11-13 S '62. (MIRA 15:9)

(Radioactive tracers)
(Glass manufacture)

APPROVED FOR RELEASE: 08/23/2000 CIA-RDP86-00513R001549620011-2"

"APPROVED FOR RELEASE: 08/23/2000 CIA-RDP86-00513R001549620011-2

ACCESSION NR: AP4009932 S/0057/64/034/001/0131/0141

AUTHOR: Shmelev, V.P.; Shkarlet, Yu.M.

TITLE: Electromagnetic field of an alternating current loop above a conducting layer

SOURCE: Zhurnal tekhnicheskoy fiziki, v.34, no.1, 1964, 131-141

TOPIC TAGS: electromagnetic field, alternating field, current loop, conducting layer, quasistationary electromagnetic field

ABSTRACT: The field is discussed in certain limiting cases of a circular current of radius a and frequency ω parallel to and at a distance h from an infinite layer of thickness b, conductivity σ, and permeability μ. The calculations are performed in the quasistationary approximation, i.e., the displacement currents, and thus radiation effects, are neglected. The solution of the problem is obtained by well-known methods in the form of Fourier-Bessel integrals. The field of the circular current in the absence of the conducting layer is expressed (by reference to a collection of problems) in terms of complete elliptic integrals, and expressions in terms of these elliptic integrals and their derivatives are obtained for certain

Card 1/2

APPROVED FOR RELEASE: 08/23/2000 CIA-RDP86-00513R001549620011-2"

"APPROVED FOR RELEASE: 08/23/2000 CIA-RDP86-00513R001549620011-2

ACC.NR: AP4009932

Fourier-Bessel integrals that occur in later expansions. The frequency of the field and the conductivity of the layer occur in the exact solution only through the parameter $s = \sqrt{4\pi\mu\omega\sigma}/c$. The field is evaluated in the limit $s = 0$, corresponding to zero frequency or a non-conductive layer. By means of the relation noted above between certain Fourier-Bessel integrals, certain elliptic integrals, and the field of a free circular current, the field in the limiting $s = 0$ is expressed as the sum of the fields of an infinite sequence of images. An asymptotic expansion of the field is obtained for large values of the parameter s. The integrand in the exact solution is expanded simultaneously in powers of 1/s and in powers of $\exp(-2bs/\sqrt{i})$, and the resulting Fourier-Bessel integrals are expressed in terms of the elliptic integrals and their derivatives. Seven terms of the double expansion are evaluated in this way. Interpretation of the terms in the asymptotic expansion in terms of reflections from the boundaries of the layer is briefly discussed. Orig.art.has: 46 formulas and 3 figures.

ASSOCIATION: Moskovskiy ordena Lenina energeticheskiy institut (Moscow "Order of Lenin" Power Engineering Institute)

SUBMITTED: 12Nov62 DATE ACQ: 10Feb64 ENCL: 00

SUB CODE: PH NR REF SOV: 004 OTHER: 001

Card 2/2

APPROVED FOR RELEASE: 08/23/2000 CIA-RDP86-00513R001549620011-2"

"APPROVED FOR RELEASE: 08/23/2000 CIA-RDP86-00513R001549620011-2

IOFIN, S.L.; SHKARPETIN, V.V.

Systems of mining theick nonferrous metal deposits in Kazakhstan. Gor. zhur. no. 1:27-34 Ja '61. (MIRA 14:1)

1. Vsesoyuznyy nauchno-issledovatel'skiy institut tsvetnykh metallov, g. Ust'-Kamenogorsk.
(Kazakhstan--Nonferrous metals) (Mining engineering)

APPROVED FOR RELEASE: 08/23/2000 CIA-RDP86-00513R001549620011-2"

"APPROVED FOR RELEASE: 08/23/2000 CIA-RDP86-00513R001549620011-2

SHABEL'NIKOV, G. P., kand.tekhn.nauk; MIKHAYLOV, V. V.; SHKARPETIN, V. V.

Fire-prevention measures in mining Tekeli deposits. Bezop.truda v prom. 5 no.11:6-10 N '61. (MIRA 14:11)

1. Vsesoyuznyy nauchno-issledovatel'skiy institut tsvetnykh metallov.
(Tekeli region--Mining engineering)

APPROVED FOR RELEASE: 08/23/2000 CIA-RDP86-00513R001549620011-2"

"APPROVED FOR RELEASE: 08/23/2000 CIA-RDP86-00513R001549620011-2

DRONOV, N.V.; IOFIN, S.L.; SHKARPETIN, V.V.

Study of the principles of butt ore recovery through a slot. Gor. zhur. no.10:27-31 O '63. (MIRA 16:11)

1. Vsesoyuznyy nauchno-issledovatel'skiy gorno-metallurgicheskiy institut tsvetnykh metallov, Ust'-Kamenogorsk.

APPROVED FOR RELEASE: 08/23/2000 CIA-RDP86-00513R001549620011-2"

"APPROVED FOR RELEASE: 08/23/2000 CIA-RDP86-00513R001549620011-2

NOVITSKIY, [illegible] GNUSIN, N.P.; SHKARUBA, A.M.

Automatic reading of polarization curves in the coordinates of a potential - current density logarithm. Zhur. fiz. khim. 39 no.8:2067-2068 Ag '65. (MIRA 18:9)

1. Institut fiziko-khimicheskikh osnov mineral'nogo syr'ya Sibirskogo otdeleniya AN SSSR.

APPROVED FOR RELEASE: 08/23/2000 CIA-RDP86-00513R001549620011-2"

"APPROVED FOR RELEASE: 08/23/2000 CIA-RDP86-00513R001549620011-2

BELONOVICH, M. (Minsk); SAMARIN, A.; NURULLAYEV, S., rabkor (Baku); SHKARUBO, A.; PROKURAT, R.

Letters to the editor. Sov. profsoiuzy 17 no.6:36-38 Mr '61. (MIRA 14:3)

1. Predsetatel' postoyanno-deystvuyushchego proizvodstvennogo soveshchaniya kombinata iskusstvennoy kozhi, g. Kalinin (for Prokurat).

(Trade unions)

APPROVED FOR RELEASE: 08/23/2000 CIA-RDP86-00513R001549620011-2"

"APPROVED FOR RELEASE: 08/23/2000 CIA-RDP86-00513R001549620011-2

L 27251-66 EWP(j)/EWP(k)/EWT(d)/EWT(m)/EWP(h)/T/EWP(1)/EWP(v) IJP(c) RM
ACC NR: AP6009868 (A) SOURCE CODE: UR/0413/66/000/004/0067/0067

AUTHORS: Kozlov, Yu. K.; Konovalov, Ye. K.; Shkarupa, A. V.; Yakimenko, N. G. 27 B

ORG: none

TITLE: Device for assembly of automobile tires. Class 39, No. 178975 announced by Omsk Tire Factory (Omskiy shinnyy zavod)

SOURCE: Izobreteniya, promyshlennyye obraztsy, tovarnyye znaki, no. 4, 1966, 67

TOPIC TAGS: tire, automotive industry

ABSTRACT: This Author Certificate presents a device for assembly of automobile tires, consisting of an assembly table and tire rim stretching mechanism. To increase the automation of the assembly, the latter is equipped with a device for removal and introduction of tubes, a mechanism for removal of the assembled tire, and a tire rim stretching mechanism equipped with a compressed air connection. The stretching mechanism is fastened to the assembly table on a movable vertical wall (see Fig. 1).

Card 1/2 UDC: 678.05:629.11.012.555

APPROVED FOR RELEASE: 08/23/2000 CIA-RDP86-00513R001549620011-2"

"APPROVED FOR RELEASE: 08/23/2000 CIA-RDP86-00513R001549620011-2

L 27251-66

ACC NR: AP6009868

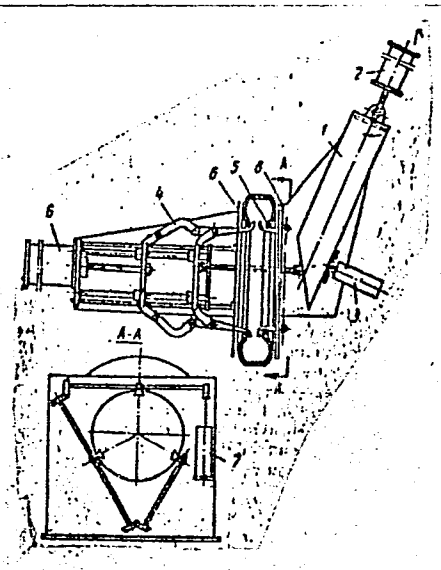

Fig. 1. 1 - directing channels; 2 - chamber piston; 3 - piston follower; 4 and 5 - levers; 6 and 7 - pneumatic connections for levers; 8 - vertical movable wall.

Orig. art. has: 1 figure.

SUB CODE: 13/ SUBM DATE: 19Nov64

Card 2/2

APPROVED FOR RELEASE: 08/23/2000 CIA-RDP86-00513R001549620011-2"

"APPROVED FOR RELEASE: 08/23/2000 CIA-RDP86-00513R001549620011-2

PREYS, V.F., kandidat tekhnicheskikh nauk; SHISHOV, V.; SHKYNIN, L., glavnyy tekhnolog oruzheynogo zavoda; SHKARUPA, V.; TYLKIN, M.N., redaktor; PULIN, L.I., tekhnicheskiy redaktor

[Mechanization and automatization of production; the experience of the Tula machine construction plant] Mekhanizatsiia i avtomatizatsiia proizvodstva; iz opyta Tul'skikh predpriiatii mashinostroeniya. [Tula] Tul'skoe kn-vo, 1956. 95 p. (MLRA 9:9)

1. Glavnyy tekhnolog Tul'skogo zavoda Ministerstva putey soobshcheniya (for Shishov). 2. Glavnyy inzhener Tul'skogo kombaynovogo zavoda (for Shkarupa)

(Automatic control)
(Tula--Machinery industry)

APPROVED FOR RELEASE: 08/23/2000 CIA-RDP86-00513R001549620011-2"

"APPROVED FOR RELEASE: 08/23/2000 CIA-RDP86-00513R001549620011-2

MALYUTIN, M.M.; SHKARUPA, V.A.; IVASHKEVICH, E.B.; BASHLYKOVA, O.M.; NORINA, A.YE.

Operations of yeast production without filtration. Gidroliz.i lesokhim. prom. 9 no.3:16-17 '56. (MLRA 9:8)

1. Tavdinskiy gidroliznyy zavod.
(Yeast)

APPROVED FOR RELEASE: 08/23/2000 CIA-RDP86-00513R001549620011-2"

"APPROVED FOR RELEASE: 08/23/2000 CIA-RDP86-00513R001549620011-2

SHLARUPA, V.I., starshiy veterinarnyy vrach.

Compound method for inoculating swine against bacillary erysipelas. Veterinariia 34 no.9:53-54 S '57. (MLRA 10:9)

1. Nemirovskaya oporno-pokazatel'naya mashinno-traktornaya stantsiya, Vinnitskoy oblasti.
(Erysipeloid--Preventive inoculation) (Swine--Diseases and pests)

APPROVED FOR RELEASE: 08/23/2000 CIA-RDP86-00513R001549620011-2"

"APPROVED FOR RELEASE: 08/23/2000 CIA-RDP86-00513R001549620011-2

SHKARUPA, V.T.

Automation and mechanization of production processes in enterprises of the Tula Economic Council. Mekh.i avtom.proizv. 16 no.7:11-12 Jl '62. (MIRA 15:8)
(Automation) (Tula Province--Technological innovations)

APPROVED FOR RELEASE: 08/23/2000 CIA-RDP86-00513R001549620011-2"

"APPROVED FOR RELEASE: 08/23/2000 CIA-RDP86-00513R001549620011-2

SHKARUPA, Z. I.

[illegible]/Cultivated Plants. Fruits. Berries. M

Abs Jour: Ref Zhur-Biol., No 5, 1958, 20515.

Author : [illegible].L. Kuts, ~~Z.I. Shkarupa~~
Inst : Dagestan Agricultural Institute.
Title : Dressing the Outside Grape Roots with Boron. (Vnekornevaya podkormka vinograda borom).

Orig Pub: Tr. Dagestansk. s.-kh. in-ta, 1956, 9, 96-98.

Abstract: Dressing the outer roots of grape vines with a 0.25% solution of boric acid reduced blossom fall in the Riesling variety by 16.3% and in the Rkatsiteli variety by 4.4%. For the Riesling variety the addition in yield was 32 centners per hectare and increased saccharinity 0.48%, for the Rkatsiteli it was correspondingly 36 centners per hectare and 0.22%.

Card : 1/1

APPROVED FOR RELEASE: 08/23/2000 CIA-RDP86-00513R001549620011-2"

"APPROVED FOR RELEASE: 08/23/2000 CIA-RDP86-00513R001549620011-2

NUDNER, T.K., dotsent; IZOTOVA, knad. med. nauk; ZHENETL', D. Kh.; PIROZHKOVA, L.A.; SHKARUPELOV, A.A.; SHMAT'KO, I.T.; YANNIKOVA, G.M.

Echinococcosis of the liver. Uzh. zap. Stavr. gos. med. inst. 8: 30-48 '63 (MIRA 17:7)

1. Kafedra obshchey khirurgii (zav. kafedroy - prof. Yu.S. Gilevich) Stavropol'skogo meditsinskogo instituta (rektor zasluzhennyy deyatel' nauki, prof. V.G. Budylin , 2-ye khirurgicheskoye otdeleniye Stavropol'skoy krayevoy klinicheskoy bol'nitsy (glavnyy vrach Yu.P. Zotov) i khirurgicheskoye otdeleniye Pyatigorskoy bol'nitsy (zav. otdel. zasluzhennyy vrach RSFSR I.I. Toshinskiy).

APPROVED FOR RELEASE: 08/23/2000 CIA-RDP86-00513R001549620011-2"

"APPROVED FOR RELEASE: 08/23/2000 CIA-RDP86-00513R001549620011-2

SHKARUPEROV, A.A.; KALASHNIKOVA, T.M., student

Echinococcosis of the muscles. Uch. zap. Stavr. gos. med. inst. 8:127-133 '63 (MIRA 17:7)

1. Kafedra obshchey khirurgii (zav. - prof. Yu. F. Gilevich) Stavropol'skogo meditsinskogo instituta (rektor - zasluzhennyy deyatel' nauki, prof. V.G. Budylin) i 2-ye khirurgicheskoye otdeleniye Stavropol'skoy krayevoy klinicheskoy bol'nitsy (glavnyy vrach Yu.P. Zotov).

APPROVED FOR RELEASE: 08/23/2000 CIA-RDP86-00513R001549620011-2"

"APPROVED FOR RELEASE: 08/23/2000 CIA-RDP86-00513R001549620011-2

KARASHUROV, Ye.S., kand. med. nauk; SHKARUPELOV, A.A.

Echinococcal relapses. Uzh. zap. Stavr. gos. med. inst. 8:205-212 '63 (MIRA 17:7)

1. Kafedra obshchey khirurgii (zav. - prof. Yu. [illegible]lavich) Stavropol'skogo meditsinskogo instituta (rektor zasluzhennyy deyatel' nauki, prof. V.G. Budylin).

APPROVED FOR RELEASE: 08/23/2000 CIA-RDP86-00513R001549620011-2"

"APPROVED FOR RELEASE: 08/23/2000 CIA-RDP86-00513R001549620011-2

SHKARUPELOV, A.A., ordinator

Recurrence of the hydatid diseases. Uch. zap. Stavr. gos. med. inst. 12:210-211 '63. (MIRA 17:9)

1. Kafedra obshchey khirurgii (zav. prof. Yu.S. Gilevich) Stavropol'skogo gosudarstvennogo meditsinskogo instituta (glavnyy vrach Yu.P. Zotov).

APPROVED FOR RELEASE: 08/23/2000 CIA-RDP86-00513R001549620011-2"

"APPROVED FOR RELEASE: 08/23/2000 CIA-RDP86-00513R001549620011-2

POZNYAK, L.A., kand. tekhn. nauk; SHKATOV, A.P., inzh; STEYN, F.S.; ORLOVA, L.M.; VLASOVA, A.I.; Prinimali uchastiye: DANIL'CHENKO, A.M., tekhnik; GREBENSHCHIKOV, V.P., tekhnik

Steels used for the manufacture of cold extrusion tools and their heat treatment. [Nauch. trudy] ENIKMASha 7:111-134 '63. (MIRA 16:7)

(Extrusion (Metals)—Equipment and supplies)
(Tool steel—Heat treatment)

APPROVED FOR RELEASE: 08/23/2000 CIA-RDP86-00513R001549620011-2"

"APPROVED FOR RELEASE: 08/23/2000 CIA-RDP86-00513R001549620011-2

L 15263-65 EWT(m)/EWA(d)/EWP(t)/EWP(k)/EWP(b) Pf-4 MJW/JD/HW/JT
ACCESSION NR: AT4048348 S/3000/64/000/009/0015/0027

B

AUTHOR: Shkatov, A. P. (Engineer); Zenchenko, T. I.

TITLE: Research on the structure and characteristics of certain steels used for hot stamping 16

SOURCE: Moscow. Eksperimental'ny*y nauchno-issledovatel'skiy institut kuznechno-pressovogo mashinostroyeniya. Nauchny*ye trudy*, no. 9, 1964. Shtampovy*ye stali; sostav, svoystva, termicheskaya obrabotka (Tool steels; composition, properties and heat treatment), 15-27

TOPIC TAGS: steel structure, steel mechanical property, hot stamping, tool steel, stamp steel, austenite steel/steel 4Kh4V4FM, steel 3Kh2V8, steel 4Kh8V2, steel 4Kh5V2FS, steel 4Kh2V5FM 14 18 18 18 18

ABSTRACT: The previously undetermined effects of heat treatment on the new steels 4Kh4V4FM (EI956), 4Kh5V2FS (EI958), and 4Kh2V5FM (EI959) introduced by TsNII Chermet, in comparison with 3Kh2V8 and 4Kh8V2 steel, were studied in the continuing search for stable, economical tool steels. Samples of known chemical composition with a diameter of 20 and a height of 15 mm were heated to temperatures between 1000 and 1300C at 50-100 intervals for periods of 20, 40, and 60 minutes and cooled in oil and air,

Card 1/3

APPROVED FOR RELEASE: 08/23/2000 CIA-RDP86-00513R001549620011-2"

"APPROVED FOR RELEASE: 08/23/2000 CIA-RDP86-00513R001549620011-2

L 15263-65

ACCESSION NR: AT4048348

in a tube furnace, after being covered by dry iron shavings in open containers to a depth of 1mm. Samples were also heated in salt baths. Tempering was done in muffle furnaces. An electronic potentiometer ensured a temperature variation of no more than ±7C in the tube furnace and ±10C in the salt bath. Steels 3Kh2V8, EI959, EI958, and EI956 retain a fine grain size, no larger than 8, when heated to 1160, 1120, 1110, and 1070C, respectively and can be quenched from a wide range of temperatures. 4Kh8V2 forms a definite austenite grain at 1050C. An increase in quenching temperature produces increases in the heat resistance and stability during subsequent warming. A decrease in quenching temperatures produces an increase in the coarseness of the grain. Resilience is not significantly lowered by increasing the quenching temperature. An increase in grain size correspondingly decreases resiliency. Conditions for heat treatment of tool steel should be chosen according to the working conditions of the tool, as well as for optimal hardness, stability, and resilience. "V. M. Yevstratova, engineer, took part in the work." Orig. art. has: 10 graphs and 1 table.

Card 2/3

APPROVED FOR RELEASE: 08/23/2000 CIA-RDP86-00513R001549620011-2"

"APPROVED FOR RELEASE: 08/23/2000 CIA-RDP86-00513R001549620011-2

L 15263-65

ACCESSION NR: AT4048348

ASSOCIATION: Eksperimental'ny*y nauchno-issledovatel'skiy institut kuznechno-pressovogo mashinostroyeniya, Moscow (Experimental Scientific Research Institute of Foundry Machinery)

SUBMITTED: 00 ENCL: 00 SUB CODE: MM

NO REF SOV: 003 OTHER: 001

Card 3/3

APPROVED FOR RELEASE: 08/23/2000 CIA-RDP86-00513R001549620011-2"

"APPROVED FOR RELEASE: 08/23/2000 CIA-RDP86-00513R001549620011-2

ACC NR: AT7001903 (A) SOURCE CODE: UR/3000/66/000/013/0074/0089

AUTHOR: Shkatov, A. P. (Engineer); Rogalev, A. M. (Engineer)

ORG: none

TITLE: Selection of die steels for hot die forming of blades from heat-resistant alloys

SOURCE: Moscow. Eksperimental'nyy nauchno-issledovatel'skiy institut kuznechno-pressovogo mashinostroyeniya. [Nauchnyye trudy], no. 13, 1966. Shtampovyye stali (Tool steels), 74-89

TOPIC TAGS: hot die forging, compressor blade, tensile strength, wear resistance, annealing / 4Kh2V5FM steel, 4Kh3V5M3F steel, 4Kh5V2FS steel

ABSTRACT: Complex-alloy, high strength, thermal-shock resistant 4Kh2V5FM (GOST 5950-63) and 4Kh3V5M3F (EP471) (ChMTU 966-63) hot die steels were tested at the ENIKMASH in hot-die forming of aircraft-engine compressor blades from EI437B [U.S. Nimonic 80A] alloy. The die insert blanks, 258 x 178 x 94 mm, were forged at 1150—950C, annealed at 700 and 870C for 2 and 3 hr, respectively, furnace cooled to 690C (4KhV25FM steel) and to 730C (4Kh3V5M3F steel), held at these temperatures for 4 hr, furnace cooled to 500C and then air cooled. Annealed insert blanks were finish machined by the electrospark method and case hardened in powdered charcoal, air quenched, and tempered. In tests, the 4Kh2V5FM steel insert sets lasted for an

APPROVED FOR RELEASE: 08/23/2000 CIA-RDP86-00513R001549620011-2"

"APPROVED FOR RELEASE: 08/23/2000 CIA-RDP86-00513R001549620011-2

ACC NR: AT7001903

average of 810 (max. 1300) blades and the 4Kh3V5M3F inserts for 590 (max. 1070) blades, compared with 400 blades for the recently developed 4Kh5V2FS hot die steel. The experimental results showed that die inserts for hot forming blade blanks from heat-resistant alloys should be heat treated to ensure a tensile strength of not less than 1700 Mn/m^2 and high wear resistance. The optimum heat treatment for 4Kh2V5FM steel consists of air quenching from 1050—1080C followed by first annealing at 620—650C; 4Kh3V5M3F (EP471) steel should be air quenched from 1100—1130C and first annealed at 620—650C; 4Kh5V2FS steel should be air quenched from 1040—1070C and first annealed at 560—580C. The second annealing should be done at temperatures 20—30C lower than the first. Heat-treated die inserts should have an HRC hardness of 46—50. The use of the surface strengthening or nitriding for increasing the wear resistance of die inserts should be investigated. Preheating to 350—450C before work greatly reduced the danger of brittle failure of inserts made from the investigated high-alloy hot die steels. Orig. art. has: 10 figures and 3 tables.

SUB CODE: 11, 13/ SUBM DATE: none/ ORIG REF: 010/ OTH REF: 002/

Card 2/2

APPROVED FOR RELEASE: 08/23/2000 CIA-RDP86-00513R001549620011-2"

"APPROVED FOR RELEASE: 08/23/2000 CIA-RDP86-00513R001549620011-2

POZNYAK, L.A., kand. tekhn. nauk; ORLOVA, L.M., inzh.; YEVSTRATOVA, V.M., inzh.; SHTEYN, F.S., inzh.; SHKATOV, A.P., inzh.

Microstructure of certain die steels for the cold and hot forming of metals and alloys. [Nauch. trudy] ENIKMASHa no.9:73-127 '64. (MIRA 17:11)

APPROVED FOR RELEASE: 08/23/2000 CIA-RDP86-00513R001549620011-2"

"APPROVED FOR RELEASE: 08/23/2000 CIA-RDP86-00513R001549620011-2

SKURATOV, A.D., red.. V redaktirovanii prinimali uchastiye: SHKATOV, K.K.; FEDOROVA, M.A.; OVCHINNIKOV, A.I.; SIZOVA, A.I.; SIGEL', M.G.; KARVETSKIY, A.V.; KULICHKIN, A.V.; NIKOLAYEVA, Z.A.; STEPANOVA, V.P.; RYZHOVA, V.K.; MUZHIKOVA, V.N.. YEREMIN, N.I., red.; KHAKHAM, Ya.M., tekhn.red.

[Economy of Ul'yanovsk Province; a concise statistical manual] Narodnoe khoziaistvo Ul'ianovskoi oblasti; kratkii statisticheskii sbornik. Ul'ianovskoe knizhnoe izd-vo, 1958. 199 p. (MIRA 12:3)

1. Ulyanovsk (Province). Oblastnoye statisticheskoye upravleniye.
2. Nachal'nik Statisticheskogo upravleniya Ul'yanovskoy oblasti (for Skuratov).

(Ul'yanovsk Province--Statistics)

APPROVED FOR RELEASE: 08/23/2000 CIA-RDP86-00513R001549620011-2"

"APPROVED FOR RELEASE: 08/23/2000 CIA-RDP86-00513R001549620011-2

SHKATOV, K.K., red.; KHAUSTOVA, K.A., tekhn.red.

[Economy of the Mordvinian A.S.S.R.; statistical collection] Narodnoe khoziaistvo Mordovskoi ASSR; statisticheskii sbornik. Saransk, 1960. 118 p. (MIRA 14:3)

1. Mordovskaya ASSR. Statisticheskoye upravleniye. 2. Nachal'nik Statisticheskogo upravleniya Mordovskoy ASSR (for Shkatov).

(Mordovia--Statistics)

APPROVED FOR RELEASE: 08/23/2000 CIA-RDP86-00513R001549620011-2"

"APPROVED FOR RELEASE: 08/23/2000 CIA-RDP86-00513R001549620011-2

ZAKHAROV, M.F., kand.tekhn.nauk; SMIRNOV, Yu.V., inzh.; SHKATOV, Ye.F., inzh.

New way of braking asynchronous short-circuited motors by the method of three-phase short-circuiting. Izv.vys.ucheb.zav.; energ. 3 no.4:40-46 Ap '60. (MIRA 13:6)

1. Ivanovskiy energeticheskiy institut imeni V.I.Lenina. Predstavlena elektromekhanicheskoy sektsiey nauchno-tekhnicheskoy konferentsii.

(Electric motors, Induction)

APPROVED FOR RELEASE: 08/23/2000 CIA-RDP86-00513R001549620011-2"

"APPROVED FOR RELEASE: 08/23/2000 CIA-RDP86-00513R001549620011-2

[illegible]

[illegible] chromatograph with a differential [illegible]. [illegible] tekh.-ekon. inform. Ser. [illegible]-issl. [illegible] inform. 17 n [illegible]:28-31 Ag '[illegible].

([illegible])

APPROVED FOR RELEASE: 08/23/2000 CIA-RDP86-00513R001549620011-2"

"APPROVED FOR RELEASE: 08/23/2000 CIA-RDP86-00513R001549620011-2

KULAKOV, M.V.; SHKATOV, Ye.F.; PUCHKOV, A.A.; KHANBERG, V.A.

Computer for processing the differential chromatograms of C_1--C_5 fractions. Mash. i neft. obor. no.9:30-31 '64. (MIRA 17:11)

1. Moskovskiy institut khimicheskogo mashinostroyeniya, Yaroslavskiy nauchno-issledovatel'skiy institut manometrov i Yaroslavskiy tekhnologicheskiy institut.

APPROVED FOR RELEASE: 08/23/2000 CIA-RDP86-00513R001549620011-2"

"APPROVED FOR RELEASE: 08/23/2000 CIA-RDP86-00513R001549620011-2

KULAKOV, M.V.; SHESTOV, Ye.F.

Differential pneumatic detector of a gas chromatograph. Priborostroenie no.10:11-13 O '64. (MIRA 17:11)

APPROVED FOR RELEASE: 08/23/2000 CIA-RDP86-00513R001549620011-2"

"APPROVED FOR RELEASE: 08/23/2000 CIA-RDP86-00513R001549620011-2

PUCHKOV, A.A.; KHANBERG, V.A.; SHKATOV, Ye.F.

Signum transducer with the EPP-109 amplifier. Priborostroenie no.10:26 O '64. (MIRA 17:11)

APPROVED FOR RELEASE: 08/23/2000 CIA-RDP86-00513R001549620011-2"

"APPROVED FOR RELEASE: 08/23/2000 CIA-RDP86-00513R001549620011-2

SHKATOV, Ye.F.; KALININ, Ye.Kh.

Stand for testing blocks of automatic tracking systems. Neftepere. i neftekhim. no.11:34-35 '64 (MIRA 18:2)

1. Yaroslavskiy neftepereb atyvayushchiy zavod.

APPROVED FOR RELEASE: 08/23/2000 CIA-RDP86-00513R001549620011-2"

"APPROVED FOR RELEASE: 08/23/2000 CIA-RDP86-00513R001549620011-2

SHKATOV, Ye.F.; MAKLASHIN, Z.I.; VESELOV, A.N.; BARAYEV, A.A.

Dynamic braking of asynchronous motors with a short-circuited rotor. Biul.tekh.-ekon.inform.Gos.nauch.-issl.inst.nauch.i tekh.inform. 18 no.1:45 Ja '65. (MIRA 18:4)

APPROVED FOR RELEASE: 08/23/2000 CIA-RDP86-00513R001549620011-2"

"APPROVED FOR RELEASE: 08/23/2000 CIA-RDP86-00513R001549620011-2

SHKATOV, Ye.F.; KU[illegible]; [illegible]YEV, A.A.

Thermograph recording temperature at four points. Pat.fiziol. i eksp.terap. 9 no.4:93-94 Jl-Ag '65. (MIRA 18:9)

1. Kafedra normal'noy fiziologii (zav. - prof. M.G.Zaikina) Yaroslavskogo meditsinskogo instituta.

APPROVED FOR RELEASE: 08/23/2000 CIA-RDP86-00513R001549620011-2"

"APPROVED FOR RELEASE: 08/23/2000 CIA-RDP86-00513R001549620011-2

KULAKOV, M.V.; SHKATOV, Ye.F.

Parameters of the experiment of chromatographic analysis of petroleum refinery gases. Neftepper. i neftekhim. no.5:14-18 '65. (MIRA 18:7)

1. Moskovskiy institut khimicheskogo mashinostroyeniya.

APPROVED FOR RELEASE: 08/23/2000 CIA-RDP86-00513R001549620011-2"

"APPROVED FOR RELEASE: 08/23/2000 CIA-RDP86-00513R001549620011-2

SELUYANOVA, Ye.; SHKATOV, Yu.; VDOVINA, T.

Improve the maintenance of apartment houses daily. Zhil.-kom. khoz. 11 no. 1:15 '61. (MIRA 14:2)

1. Nachal'nik zhilishchnoekspluatatsionnoy kontory No. 12 Oktyabr'skogo rayona Moskvy (for Seluyanova). 2. Glavnyy inzhener remontno-stroitel'nogo tresta g. Lipetska (for Shkatov). 3. Glavnyy inzhener zhilishchnogo upravleniya g. Voronezha (for Vdovina).
(Apartment houses--Maintenance and repair)

APPROVED FOR RELEASE: 08/23/2000 CIA-RDP86-00513R001549620011-2"

"APPROVED FOR RELEASE: 08/23/2000 CIA-RDP86-00513R001549620011-2

25(1) PHASE I BOOK EXPLOITATION SOV/2050

Svarka sbornik statey, [vyp.] 1 (Welding: Collection of Articles, Nr 1) Leningrad, Sudpromgiz, 1958. 246 p. 4,000 copies printed.

Resp. Ed.: G. I. Kapyrin, Candidate of Technical Sciences; Ed.: I. A. Zhirmunskaya; Tech. Ed.: K. M. Volchok.

PURPOSE: This collection of articles is intended for use in research institutes, institutes of higher learning, design offices, and plants.

COVERAGE: These technical papers deal with the results of research in welding technology. The main purpose of this work was to investigate the effects of various welding regimes and heat treatments on the mechanical properties of welds of austenitic and perlitic composition. A number of experiments also dealt with the welding properties and weldability of titanium-base alloys and a number of nonferrous metals. One of the objects of the research was to establish the relationship between the geometry of the weld seam and its physical properties. The crystallization of the weld, its mechanical properties, and the various factors affecting the grain structure of the metal were studied by a number of scientists. Of special practical interest is the study of the behavior of a welded structure in which the elasticity of the material and of the welded joint are not within the same range. These considerations lead to experiments with mechanically induced changes in the properties of the weld seam. Another problem which presents many difficulties in welding is the behavior and changes in the heat-affected zone next to the welded joint. One of the papers deals with experiments in this field. A description is given of the equipment and the technique used in electroslag welding, which is regarded as one of the major advances in modern welding technology. Several papers deal with welding techniques of nonferrous alloys and with the use of special fluxes for this work. Most of the papers are profusely illustrated with graphs, diagrams, and photographs. References are given after each article.

TABLE OF CONTENTS:

Welding (Cont.) SOV/2050

Shaganin, M.V., Candidate of Technical Sciences. Some Problems of Crystallization of Weld in Electric Arc Welding 16

Bruk, B.I., Candidate of Technical Sciences. Study of Distribution of Elements in Weld by Means of Radiography 27

Kudoyarov, B.V., Engineer. Tendency Towards Brittleness of Multilayer Low-alloy Welds Made by Submerged Automatic Welding Process 38

Molchanova, L.G., Candidate of Technical Sciences. Effect of Heat Treatment During Welding on Properties of Metal of Welds Made With Low-alloy Electrodes 49

Molchanova, L.G., Candidate of Technical Sciences; N.Z. Pogorel'skaya, Engineer; and Yu.I. Shkatov, Engineer. Effect of Annealing on Properties of Welded Joints of Chrome-Molybdenum-Vanadium Steel 61

Card 3/6

Shkatov, Yu. I., Engineer, and Yu. D. Brusnitsyn. Problem of Welding Fluxes for Automatic Welding With Low-alloy Cr-Mo-V Wire Electrodes 232

AVAILABLE: Library of Congress

go/drh

APPROVED FOR RELEASE: 08/23/2000 CIA-RDP86-00513R001549620011-2"

"APPROVED FOR RELEASE: 08/23/2000 CIA-RDP86-00513R001549620011-2

MOLCHANOVA, L.G., kand.tekhn.nauk; POGOREL'SKAYA, M.Z.; SHKATOV, Yu.I., inzh.

Effect of tempering on the properties of welded joints in chromium-molybdenum-vanadium steel. Svarka 1:61-72 '58. (MIRA 12:8)

(Chromium-molybdenum steel--Welding)
(Chromium-vanadium steel--Welding)
(Tempering)

APPROVED FOR RELEASE: 08/23/2000 CIA-RDP86-00513R001549620011-2"

"APPROVED FOR RELEASE: 08/23/2000 CIA-RDP86-00513R001549620011-2

SHKATOV, Yu.I., inzh.; BRUSNITSYN, Yu.D.

Welding fluxes for the automatic welding of low-alloy chromium-molybdenum-vanadium steel wire. Svarka 1:232-246 '58. (MIRA 12:8)

(Flux (Metallurgy))
(Wire--Welding)
(Chromium-molybdenum steel--Welding)

APPROVED FOR RELEASE: 08/23/2000 CIA-RDP86-00513R001549620011-2"

"APPROVED FOR RELEASE: 08/23/2000 CIA-RDP86-00513R001549620011-2

MOLCHANOVA, L.G., kand.tekhn.nauk; POGOREL'SKAYA, M.Z., kand.tekhn.nauk; SHKATOV, Yu.I., inzh.

Effect of subjecting it to long intervals of high temperatures on the brittleness of welded chromium-molybdenum-vanadium steel. Svarka 2:110-120 '59. (MIRA 14:5)

(Chromium-molybdenum steel--Welding)
(Metals at high temperatures)

APPROVED FOR RELEASE: 08/23/2000 CIA-RDP86-00513R001549620011-2"

"APPROVED FOR RELEASE: 08/23/2000 CIA-RDP86-00513R001549620011-2

SHKATOV, Yu.I., inzh.

Effect of conditions of automatic welding and the tupe of edge preparation on the formation of hot cracks in thick chromium-molybdenum-vanadium steel. Svarka 2:139-155 '59. (MIRA 14:5)
(Chromium-molybdenium steel—Welding)

APPROVED FOR RELEASE: 08/23/2000 CIA-RDP86-00513R001549620011-2"

"APPROVED FOR RELEASE: 08/23/2000 CIA-RDP86-00513R001549620011-2

SHKATOV, Yu.S. [Shkatov, IU.S.]; SIDOROV, O.D.

Steam operated oil atomizer. Mekh.sil'. hosp. 9 no.3:24 Mr '58. (MIRA 11:4)

1. Golovniy inzhener Balakliiv s'koi mashinno-traktornoi stantsii, Khar'kivs'koi oblasti (for Shkatov). 2. Zaviduyuchiy maysterneyu Balakliivs'koi mashinno-traktornoi stantsii, Kharkivs'koi oblasti (for Sidorov).

(Feeding and feeding stuffs--Equipment and supplies)

APPROVED FOR RELEASE: 08/23/2000 CIA-RDP86-00513R001549620011-2"

"APPROVED FOR RELEASE: 08/23/2000 CIA-RDP86-00513R001549620011-2

ORLOVA, Ye.M.; SHKATOVA, A.F.

Correction of monocular aphakia with contact lenses. Uch. zap. GNII glaz.bol. no.8: Uch.zap. GNII glaz.bol. no.8: 173-180'63. (MIRA 16:9)

1. Gosudarstvennyy nauchno-issledovatel'skiy institut glaznych bolezney imeni Gel'mgol'tsa (for Orlova) 2. Poliklinika No.7 Baumanskogo rayona Moskvy (for Shkatova).
(CONTACT LENSES)
(CRYSTALLINE LENS—ABNORMITIES AND DEFORMITIES)

APPROVED FOR RELEASE: 08/23/2000 CIA-RDP86-00513R001549620011-2"

"APPROVED FOR RELEASE: 08/23/2000 CIA-RDP86-00513R001549620011-2

KALINICHEV, V.A. (Leningrad); SHKATOVA, A.M. (Leningrad)

Developing materials with a low and definite value of magnetic permeability for standards. Porosh.met. 4 no.4:37-42 Jl-Ag '64. (MIRA 18:8)

APPROVED FOR RELEASE: 08/23/2000 CIA-RDP86-00513R001549620011-2"

"APPROVED FOR RELEASE: 08/23/2000 CIA-RDP86-00513R001549620011-2

SOV/137-58-7-15807

Translation from: Referativnyy zhurnal, Metallurgiya, 1958, Nr 7, p 273 (USSR)

AUTHORS: Khazan, A. N., Shkatova, A. M.

TITLE: Effect of the Temperature of Aging (Annealing) on the Mechanical Properties of Nonmagnetic Tire Steel [Vliyaniye temperatury stareniya (otpuska) na mekhanicheskiye svoystva nemagnitnoy bandazhnoy stali]

PERIODICAL: Elektrosila, Nr 15, 1957, pp 63-66

ABSTRACT: The character of the variation of mechanical properties (σ_b, σ_s, ψ, and δ_5) of tempered nonmagnetic austenite St EI-503 steel, containing (in %): C 0.74, Mn 8.85, Ni 7.70, Cr 3.20, and W 0.85 at various stages of cold working by stretching (15, 23, and 30%), followed by 20 hours of aging (annealing) at 300-700°C. The results obtained were compared with the data for high-strength pearlite St OKhNZM Steel, quenched and annealed at various temperatures, used for "magnetic" tires. It is noted that the most characteristic distinctive trait of cold-worked St EI-503 steel is the simultaneous decrease in it of σ_s, δ_5, and ψ at a high aging

Card 1/2

APPROVED FOR RELEASE: 08/23/2000 CIA-RDP86-00513R001549620011-2"

"APPROVED FOR RELEASE: 08/23/2000 CIA-RDP86-00513R001549620011-2

SOV/137-58-7-15807

Effect of the Temperature of Aging (cont.)

temperature (600-700°). The mechanism of aging of cold forged St EI-503 steel is explained. Cases of overheating during the fitting on and the removal of tire rings causing irreparable damage are examined. The advisability of increasing the aging temperature from 440-450° to 480-500° for the same length of time (8 hours) is determined. The possibility of reliable utilization of the distinct properties of St EI-503 steel at a high aging temperature is indicated in the investigation of wrecked tire rings made of this steel as an objective criterion of the permissibility of local overheating of the rings up to >500° during their fitting or removal.

1. Steel--Properties 2. Steel--Heat treatment

P. V.

Card 2/2

APPROVED FOR RELEASE: 08/23/2000 CIA-RDP86-00513R001549620011-2"

"APPROVED FOR RELEASE: 08/23/2000 CIA-RDP86-00513R001549620011-2

GREKOV, N.A.; DURNEV, V.D.; SHKATOVA, A.M.

Testing of electrical steel. Zav.lab. 29 no.12:1453-1454 '63. (MIRA 17:1)

1. Vsesoyuznyy nauchno-issledovatel'skiy institut elektromekhaniki, Leningradskiy filial i zavod "Elektrosila".

APPROVED FOR RELEASE: 08/23/2000 CIA-RDP86-00513R001549620011-2"

"APPROVED FOR RELEASE: 08/23/2000 CIA-RDP86-00513R001549620011-2

L 30365-66 EWT(m)/EWP(t)/ETI IJP(c) JD/HW/JG/WB/GD

ACC NR: AT6012379 SOURCE CODE: UR/0000/65/000/000/0119/0124

AUTHORS: Orlova, F. A.; Shkatova, N. A.

ORG: none

59
B+1

TITLE: A study of the corrosion and electrochemical behavior of titanium and its alloys in solutions of perchloric acid

SOURCE: Soveshchaniye po metallokhimii, metallovedeniyu i primeneniyu titana i yego splavov, 6th. Novyye issledovaniya titanovykh splavov (New research on titanium alloys); trudy soveshchaniya. Moscow, Izd-vo Nauka, 1965, 119-124

TOPIC TAGS: titanium, titanium alloy, corrosion resistance, electrochemical analysis, ~~temperature, abrasive,~~ perchloric acid / AT3 titanium alloy, AT6 titanium alloy, AT8 titanium alloy

ABSTRACT: The results are given of a study of the corrosion and electrochemical behavior of a number of metal structural materials in solutions of perchloric acid as a function of its concentration, temperature, and solid-phase concentration. Chromium, chromium-nickel-molybdenum, chromium-nickel steel, nickel and its alloys with chromium and molybdenum, aluminum and Duralumin, lead, niobium, titanium, and AT3, AT6, and AT8 titanium alloys were tested. The acid concentration ranged from

Card 1/3

APPROVED FOR RELEASE: 08/23/2000 CIA-RDP86-00513R001549620011-2"

"APPROVED FOR RELEASE: 08/23/2000 CIA-RDP86-00513R001549620011-2

L 30365-66

ACC NR: AT6012379

20 to 72%, and the temperature varied from 0 to +90C. An increase in the oxidizing properties of $HClO_4$ solutions (when temperature and concentration are increased) promotes passivation of titanium and its alloys. The titanium potential increased from 0.12 to 0.82 V (see Fig. 1). The abrasive action of the solid phase on the electrochemical behavior of titanium and its alloys AT3 and AT6 is a function of the oxidizing properties of the $HClO_4$ solution, the hardness of the metals studied, and the amount of erosional reagents.

Card 2/3

APPROVED FOR RELEASE: 08/23/2000 CIA-RDP86-00513R001549620011-2"

"APPROVED FOR RELEASE: 08/23/2000 CIA-RDP86-00513R001549620011-2

L 30365-66

ACC NR: AT6012379

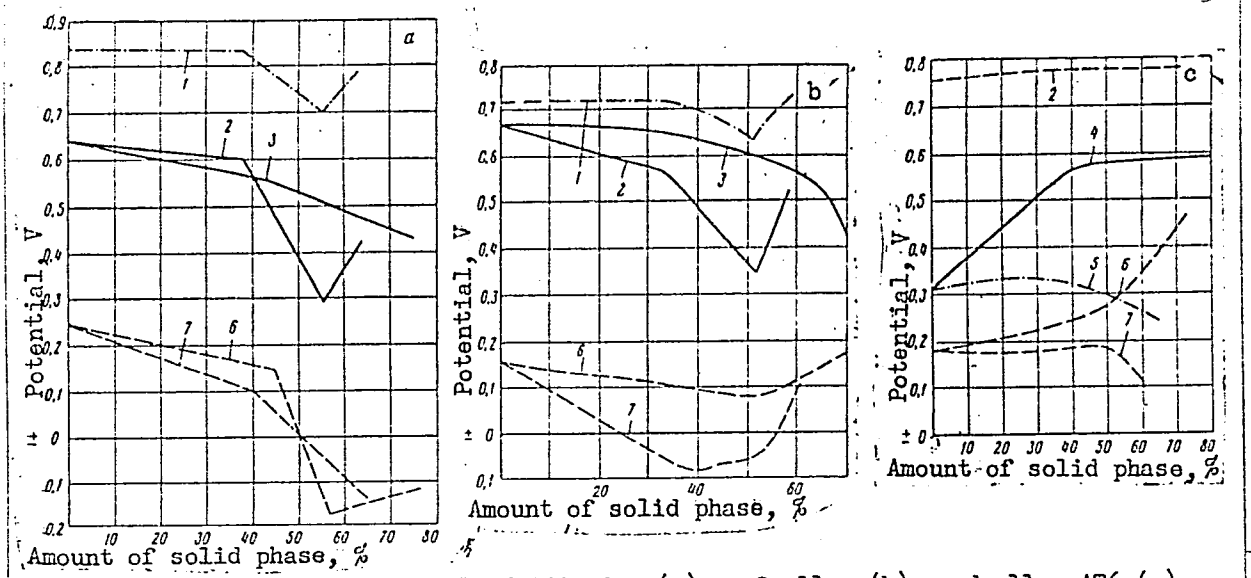

Fig. 1. Steady-state potential of titanium (a), AT3 alloy (b), and alloy AT6 (c) versus type and amount of solid phase in perchloric acid solutions: 1 - 72% $HClO_4$, 90C, glass; 2 - 72% $HClO_4$, 20C, glass; 3 - 73% $HClO_4$, 20C sand; 4 - 57% $HClO_4$, 20C, sand; 5 - 57%, 20C, glass; 6 - 20% $HClO_4$, 20C, sand; 7 - 20% $HClO_4$, 20C, glass. Orig. art. has: 7 figures.

Card 3/3 SUB CODE: 11/ SUBM DATE: 02Dec65/ ORIG REF: 002/ OTH REF: 001

APPROVED FOR RELEASE: 08/23/2000 CIA-RDP86-00513R001549620011-2"

"APPROVED FOR RELEASE: 08/23/2000 CIA-RDP86-00513R001549620011-2

L 11380-63 EWT(m)/BDS AFFTC/ASD

S/120/63/000/002/013/041

53

52

AUTHORS: Golikov, V.V., Shimchak, G. F., and Shkatula, A. A.

19

TITLE: A very efficient slow-neutron detector using a ZnS(Ag)+ B_2O_3 mixture

PERIODICAL: Pribory i tekhnika eksperimenta, March-April 1963, v. 8, no. 2, 59-62

TEXT: The authors investigated the scintillation properties of the T-1 detector (in which the ratio ZnS:B_2O_3 is 3:1 by weight in a mixture of ZnS(Ag) + B_2O_3) in order to demonstrate that the maximum efficiency of such detectors is greater than the 5 percent estimated in earlier articles. The grain size, surface density, shape of detector surface, and composition were varied to find the highest efficiency: 60 percent for a 125 mg/cm^2 surface density, saw-toothed surface (30° wedges), 300-570 μ grain size, a boron-oxide enriched composition

Card 1/2

APPROVED FOR RELEASE: 08/23/2000 CIA-RDP86-00513R001549620011-2"

"APPROVED FOR RELEASE: 08/23/2000 CIA-RDP86-00513R001549620011-2

L 11380-63 S/120/63/000/002/013/041

A very efficient flow-neutron...

and γ-ray elimination (achieved by setting the instrument threshold so that its efficiency in registering Co^{60} γ-rays was 10^{-4} percent). Experiments on a laboratory model with a detector area of $2000 cm^2$ showed that double-coincidence operation reduces the efficiency by only about 15 percent, as does γ-ray elimination. A detector with 300 cm^2 area has operated for 14 months without deterioration in its characteristics. There are five figures.

ASSOCIATION: Ob'yedinennyy institut yadernykh issledovaniy (Joint Institute for Nuclear Research)

SUBMITTED: April 28, 1962

ja/
Card 2/2

APPROVED FOR RELEASE: 08/23/2000 CIA-RDP86-00513R001549620011-2"

"APPROVED FOR RELEASE: 08/23/2000 CIA-RDP86-00513R001549620011-2

SHKATULOV, D.R., inzhener.

Using binding material from coal against seepage of water in canals. Gidr. i mel. 5 no.6:66-71 Je '53. (MLRA 6:7)

(Soil percolation)

APPROVED FOR RELEASE: 08/23/2000 CIA-RDP86-00513R001549620011-2"

"APPROVED FOR RELEASE: 08/23/2000 CIA-RDP86-00513R001549620011-2

SHKATULOV, D. R.

Shkatulov, D. R.

"The struggle against the filtration of water out of irrigation canals by using black coal binders." Min Higher EducationUSSR, Novocherkassk Soil Improvement Engineering Inst. Novocherkassk, 1955. (Dissertation for the Degree of Candidate in Technical Science.)

Knizhnaya Letopis'
No. 18, 1956. Moscow.

APPROVED FOR RELEASE: 08/23/2000 CIA-RDP86-00513R001549620011-2"

"APPROVED FOR RELEASE: 08/23/2000 CIA-RDP86-00513R001549620011-2

SOV/124-57-9-10702

Translation from: Referativnyy zhurnal. Mekhanika, 1957, Nr 9, p 124 (USSR)

AUTHOR: Shkatulov, D. R.

TITLE: The Prevention of Seepage From Canals by Means of the Use of Hard-coal Binder Materials (Bor'ba s fil'tratsiyey kanalov primeneniyem kamennougol'nykh vyazhushchikh materialov)

PERIODICAL: Sb. tr. Yuzhnogo n.-i. in-ta gidrotekhn. i melior., 1956, Nr 4, pp 29-37

ABSTRACT: Bibliographic entry

Card 1/1

APPROVED FOR RELEASE: 08/23/2000 CIA-RDP86-00513R001549620011-2"

"APPROVED FOR RELEASE: 08/23/2000 CIA-RDP86-00513R001549620011-2

SHKATULOV, D.R., kand.tekhn.nauk.

Treating a cement concrete surface with emulsified asphalt. (MIRA 10:10)
Avt.dor. 19 no.11:14-15 N '56.
(Roads, Concrete) (Asphalt)

APPROVED FOR RELEASE: 08/23/2000 CIA-RDP86-00513R001549620011-2"

"APPROVED FOR RELEASE: 08/23/2000 CIA-RDP86-00513R001549620011-2

SHKATULOV, D.R., kand.tekhn.nauk; ARABKERTSEVA, M.A., inzh.

Using wastes obtained in electrode production for construction needs. Stroi.mat. 5 no.12:34-35 D '59. (MIRA 13:3)
(Industrial wastes) (Building materials)

APPROVED FOR RELEASE: 08/23/2000 CIA-RDP86-00513R001549620011-2"

"APPROVED FOR RELEASE: 08/23/2000 CIA-RDP86-00513R001549620011-2

SHKATULOV, D.R., kand.tekhn.nauk

Making asphalt concrete with waste molding materials. Avt.dor. 22 no.7:6-7 Jl '59. (MIRA 12:9)
(Sand, Foundry) (Asphalt concrete)

APPROVED FOR RELEASE: 08/23/2000 CIA-RDP86-00513R001549620011-2"

"APPROVED FOR RELEASE: 08/23/2000 CIA-RDP86-00513R001549620011-2

SHKATULOV, D.R., kand.tekhn.nauk

Using soluble glass in making flooring slabs on concreting units. Bet. i zhel.-bet. no.11:514-516 N '60. (MIRA 13:11)
(Soluble glass) (Concrete slabs)

APPROVED FOR RELEASE: 08/23/2000 CIA-RDP86-00513R001549620011-2"

"APPROVED FOR RELEASE: 08/23/2000 CIA-RDP86-00513R001549620011-2

SHKATULOV, D.R., kand.tekhn.nauk

Using open-hearth furnace slag in road construction. Sbor. trud. NII po stroi. ASiA [Rost.] no.6:135-141 '62.

Using pitch waste from electrode manufacture in asphalt concrete. Ibid.:143-146 (MIRA 17:9)

APPROVED FOR RELEASE: 08/23/2000 CIA-RDP86-00513R001549620011-2"

"APPROVED FOR RELEASE: 08/23/2000 CIA-RDP86-00513R001549620011-2

SHKATULOV, D.R., kand.tekhn.nauk

Use open-hearth furnace slags in precast reinforced concrete construction. Stroi.mat. 9 no.9:19-21 S '63. (MIRA 16:10)

APPROVED FOR RELEASE: 08/23/2000 CIA-RDP86-00513R001549620011-2"

"APPROVED FOR RELEASE: 08/23/2000 CIA-RDP86-00513R001549620011-2

SHKATULOV, Dmitriy Rodionovich, kand. tekhn. nauk; YURCHENKO, V.I., red.

[Use of industrial wastes in construction] Otkhody promyshlennosti - stroitel'stvu. Rostov-na-Donu, Rostovskoe knizhnoe izd-vo, 1965. 55 p. (MIRA 18:8)

APPROVED FOR RELEASE: 08/23/2000 CIA-RDP86-00513R001549620011-2"

"APPROVED FOR RELEASE: 08/23/2000 CIA-RDP86-00513R001549620011-2

SHKATULOV, D.R., kand. tekhn. nauk; POLVAL'NYY, A.M., kand. tekhn. nauk

Bituminous paste for waterproofing of surfaces and the protection of structural elements from corrosion. Prom. stroi. 42 no.5:25-29 '65. (MIRA 18:8)

APPROVED FOR RELEASE: 08/23/2000 CIA-RDP86-00513R001549620011-2"

"APPROVED FOR RELEASE: 08/23/2000 CIA-RDP86-00513R001549620011-2

SHKATULOVA, A. P. Cand Biol Sci -- (diss) "Ecology of the gray crow (Corvus corone cornix) and its practical importance." Mos, 1954. 24 pp (Mos City Ped Inst im V. P. Potemkin), 150 copies (KL, 43-59, 123)

APPROVED FOR RELEASE: 08/23/2000 CIA-RDP86-00513R001549620011-2"

"APPROVED FOR RELEASE: 08/23/2000 CIA-RDP86-00513R001549620011-2

SHKATULOVA, A.P.

Biology of yellow-breasted and pine buntings in Chita Province.
Ornitologiia no.4:176-181 '62. (MIRA 16:4)
(Chita Province—Bunting (Birds))

APPROVED FOR RELEASE: 08/23/2000 CIA-RDP86-00513R001549620011-2"

"APPROVED FOR RELEASE: 08/23/2000 CIA-RDP86-00513R001549620011-2

SHKAVRO, Leonid; SMOLIN, Vladimir, planerist-sportsmen.

Winged youth. Kryl.rod. 4 no.7:7 Jl '53. (MLRA 6:7)
(Gliders (Aeronautics)) (Smolin, Vladimir)

APPROVED FOR RELEASE: 08/23/2000 CIA-RDP86-00513R001549620011-2"

"APPROVED FOR RELEASE: 08/23/2000 CIA-RDP86-00513R001549620011-2

SAMAVRO, V.G.

Investigating blast furnace graphite. Izv. vys. ucheb. zav.; chern. met. 7 no.11:29-33 '64. (MIRA 17:12)

1. Moskovskiy institut stali i splavov.

APPROVED FOR RELEASE: 08/23/2000 CIA-RDP86-00513R001549620011-2"

"APPROVED FOR RELEASE: 08/23/2000 CIA-RDP86-00513R001549620011-2

[illegible]

[illegible] Plants, Fruits, Berries, Russ. Tea.

[illegible] : [illegible], No. [illegible], [illegible], [illegible]

[illegible] : Shkef, Ye. S.

[illegible] : Biology Faculty, Kirghiz Univ.

[illegible] : Conditions Which Affect Fruit Tree Seed Germination.

[illegible] : [illegible] Biol. fak. Kirg. un-t, 1957, vyp. 2, [illegible]

[illegible] : This study was made in 1951-1954 in a zone having adequate moisture (600-700 mm) in the Northern Caucasus. The highest germination in the seeds of wild apple, pear, wild myrobolan plum, sour cherry, damson plum and dog rose occurred when the seeds were stratified immediately after picking. Particularly detrimental was storing the stone fruit and dog rose seeds in an air dried condition before stratification.

[illegible]

APPROVED FOR RELEASE: 08/23/2000 CIA-RDP86-00513R001549620011-2"

"APPROVED FOR RELEASE: 08/23/2000 CIA-RDP86-00513R001549620011-2

[illegible], [illegible].

[illegible], [illegible].- "Effect of the Ratio of Calcium and Potassium on the Development of Plants as a Function of the Anion Composition of the Environment." Moscow Order of Lenin Agricultural Academy K. A. Timiryazev, Moscow, 1955 (Dissertations for Degree of Candidate of Agricultural Sciences)

So: Knishnaya Letopis' No. 26, June 1955, Moscow

APPROVED FOR RELEASE: 08/23/2000 CIA-RDP86-00513R001549620011-2"

"APPROVED FOR RELEASE: 08/23/2000 CIA-RDP86-00513R001549620011-2

BAGAYEV, V.B., kand. sel'skokhoz. nauk; SHKEL', S.Ye., kand. sel'skokhoz. nauk

Reaction of corn to the herbicide 2,4-D as related to the conditions of nutrition. Izv. TSKHA no.4:123-133 '63. (MIRA 17:1)

APPROVED FOR RELEASE: 08/23/2000 CIA-RDP86-00513R001549620011-2"

"APPROVED FOR RELEASE: 08/23/2000 CIA-RDP86-00513R001549620011-2

BAGAYEV, V.B., kand. sel'skokhoz. nauk; SHKEL', S.Ya., kand. sel'skokhoz. nauk

Effect of mineral fertilizers on the yield of corn stalks under spraying with 2,4-D. Izv. TSKHA no.1:64-70 '64. (MIRA 17:4)

1. Kafedra agrokhimii i biokhimii Moskovskoy ordena Lenina sel'skokhozyaystvennoy akademii imeni Timiryazeva.

APPROVED FOR RELEASE: 08/23/2000 CIA-RDP86-00513R001549620011-2"

"APPROVED FOR RELEASE: 08/23/2000 CIA-RDP86-00513R001549620011-2

GULYAKIN, I.V., prof. doktor biolog. nauk; YUDIN, D.A., kand. sel'skokhoz. nauk; SHKEL', S.Ye., kand. sel'skokhoz. nauk; SIROTKINA, I.A., mladshiy nauchnyy sotrudnik

Efficient use of fertilizers as a means for the intensification of agriculture; results of studies on the systems of the use of fertilizers in field crop rotation on the "Dubki" Experimental and Training Farm. Izv. TSKHA no.5:74-82 '64. (MIRA 18:5)

1. Kafedra agrokhimii i biokhimii Moskovskoy ordena Lenina sel'skokhozyaystvennoy akademii imeni Timiryazeva.

APPROVED FOR RELEASE: 08/23/2000 CIA-RDP86-00513R001549620011-2"

"APPROVED FOR RELEASE: 08/23/2000 CIA-RDP86-00513R001549620011-2

SHKELS, V.A

(3)

Possibility of utilisation of the paraffinic fraction from sapropelic coal-tar. N. Brakshs and V. Shkele (*Kim. Inst. Zinatniskie Raksti, Riga*, 1950, 1, 127—137).—The paraffinic fraction from sapropelic coal-tar is isolated most satisfactorily by fractional freezing from a solution of the tar in acetone (10 times the weight of the paraffin), followed by pressing above 270°, which yields 12% of dry crude paraffin fraction (I), m.p. 46°, and ~26% of oil (II). Refining of I gave a product of m.p. 45°, satisfactory for match-making. Refining of II with H_2SO_4 and NaOH gave a dark-coloured oil, d_4^{20} 0·880—0·890, η 3·5—4° Engler, solidification point −8 to −9°, flash point 148°. The quantity of H_2SO_4 used in refining can be reduced by preliminary air blowing of the hot tar. R. C. MURRAY.

10-14-54
88P

APPROVED FOR RELEASE: 08/23/2000 CIA-RDP86-00513R001549620011-2"

"APPROVED FOR RELEASE: 08/23/2000 CIA-RDP86-00513R001549620011-2

SHKELE, V. A.

(3)

Purification of distillates from sapropelic coal-tar. N. Brakshs and V. Shkele (*Kim. Inst. Zinatnishie Raksti, Riga*, 1950, 1, 138—154).—Phenols can be removed from the tar with 10% NaOH and with milk of lime, and the solution of Na phenolates obtained by NaOH washing of the tar can be used for partial de-phenolation. H_2SO_4 extracts the pyridine bases, the amount required being 80% of the weight of the bases for the up to 200° cut, and 80—90% for the 200—270° cut. The tar can also be purified by selective solution with aq. alcohol, but there are serious losses of neutral oil when a high degree of purification is aimed at.

R. C. MURRAY.

10/27/54

APPROVED FOR RELEASE: 08/23/2000 CIA-RDP86-00513R001549620011-2"

"APPROVED FOR RELEASE: 08/23/2000 CIA-RDP86-00513R001549620011-2

SHKELE, V. A.

SHKELE, V. A. -- "Investigation of the Process and Products of Thermal Decomposition of Peat." Acad Sci Latvian SSR. Inst of Forestry Problems, 1955. In Latvian (Dissertation for the Degree of Candidate of Chemical Sciences)

SO: Izvestiya Ak. Nauk Latvivskov SSR, No. 9, Sept., 1955

APPROVED FOR RELEASE: 08/23/2000 CIA-RDP86-00513R001549620011-2"

"APPROVED FOR RELEASE: 08/23/2000 CIA-RDP86-00513R001549620011-2

CHOLPANKULOV, T.Ch.; SHKELEV, G.S.

Geology and petrography of the Nauryzbay gold-antimony deposit in the northwestern part of the Lake Balkhash region (central Kazakhstan). Izv. AN Kazakh. SSR. Ser.geol. no.3:74-78 '62. (MIRA 15:7)

(Balkhash Lake region--Ore deposits)

APPROVED FOR RELEASE: 08/23/2000 CIA-RDP86-00513R001549620011-2"

"APPROVED FOR RELEASE: 08/23/2000 CIA-RDP86-00513R001549620011-2

SHKENEV, YU.S.

PHASE I BOOK EXPLOITATION SOV/4531

Akademiya nauk SSSR. Institut mekhaniki

Inzhenernyy sbornik, tom 26 (Engineering Symposium, Vol. 26) Moscow, 1958. 286 p. 2,400 copies printed.

Sponsoring Agency: Akademiya nauk SSSR. Otdeleniye tekhnicheskikh nauk. Institut mekhaniki.

Resp. Ed.: A. A. Il'yushin; Ed.: G. I. Pshenichnov; Tech. Ed.: B. M. Lerman.

PURPOSE: This book is intended for engineers.

COVERAGE: The book contains 29 articles dealing with professional work performed by mechanical engineers, such as the calculations of shells, rods, and plates, and solutions of problems in stress distribution and equilibrium. Oscillations (including flutter) and deformation of shells, equilibrium of shell panels, rods and solids, stability of rods, plates, frames and other members, stress concentration, and bending are discussed. Oscillations of aircraft wings are studied. References accompany each article.

Tsurkov, I. S. [Moscow]. Concerning the Question of Elastic Equilibrium of a Rectangular Panel in a Slanting Shell With End Deflections [Received on 1/6/1958] 49

Shkenev, Yu. S. [Moscow]. Deformation of a Free Cylindrical Shell Under Impact [Received on 5/8/1958] 54

Pshenichnov, G. I. (Moscow). Concerning the Calculation of Slanting Cylindrical Network Shells (Received on 1/8/1958) 59

Lakhtin, A. A. (Sverdlovsk). Concerning the Calculation of Certain Parts with Tore-Shaped Components (Received on 10/27/1955) 66

Yelpat'yevskiy, A. N. (Moscow). Natural Oscillations of Prismatic Shells of the Type Used for Aircraft Shell Wing (Received 6/12/1958) 78

Grigor'yev, A. S. (Moscow). Two Simple Problems in Elastic Equilibrium With Large Displacements (Received on 9/14/1955) 85

Myzin, A. K. (Moscow). Concerning the Calculation of Elastic Coaxial Cylinders Connected Together in Individual Points (Received on 12/10/1956) 87

Stepanov, R. D. (Moscow). Certain Quadratures of Fundamental Beam Functions (Received on 5/16/1958 94

Levitskaya, N. D. [Moscow]. Experimental Testing of Performance of an Orthotropic Cylindrical Shell Reinforced by a Ring [Received on 1/25/1958] 101

Solyanik-Krassa, K. V. [Leningrad]. Elastic Equilibrium of Solids of Revolution [Received on 11/30/1956] 113

Lyubimov, V. M. [Moscow]. Approximate Solution of a Problem Relating to Certain Particular Cases of a Load Applied to an Elastic Annular Segment [Received on 6/18/58] 137

Uzdalev, A. I. [Saratov]. Elastic Equilibrium of a Cylindrically Anisotropic Rod Under a Load Uniformly Distributed Longitudinally [Received on 12/1/1955] 148

Popov, S. M. [Moscow]. Stability of Rods and Plates Beyond the Elasticity Limit [Received on 3/2/1958] 161

Lipkin, V. B. [Leningrad]. Stress Concentration Under Simple Bending in an Orthotropic Plate Weakened by a Circular Hole [Received on 2/20/1956] 179

Card 4/6

APPROVED FOR RELEASE: 08/23/2000 CIA-RDP86-00513R001549620011-2"

"APPROVED FOR RELEASE: 08/23/2000 CIA-RDP86-00513R001549620011-2

SOV/24-58-10-33/34

AUTHOR: Panovko, Ya. G.

TITLE: A Conference on Elastic Vibrations at the Institute of Mechanical Engineering of the Academy of Sciences of the Latvian SSR (Soveshchaniye po voprosam uprugikh kolebaniy v Institute mashinovedeniya Akademii nauk Latviyskoy SSR)

PERIODICAL: Izvestiya Akademii nauk SSSR, Otdeleniye tekhnicheskikh nauk, 1958, Nr 10, pp 158-159 (USSR)

ABSTRACT: This Conference took place on June 11-15, 1958, in Riga. Altogether over 70 people took part in the conference (apart from those normally based at Riga). Eleven papers were read:
1) "The effect of vibration on systems with dry friction", by I. I. Blekhman and G. Yu. Dzhanelidze (Leningrad).
2) Two papers on dynamic problems in the nonlinear theory of plates and the shells by V. V. Bolotin and A. S. Vol'mir (Moscow).
3) "A qualitative study of the form and frequencies of natural vibrations of thin elastic shells", by A. L. Gol'denveyzer (Moscow).
4) "Some problems in connection with vibrations of elastic rods in the case of large displacements", by Yu. S. Shkenev (Moscow).
5) "Coupled vibrations of vanes and discs in turbines" and "Passage through resonance of a linear system with nonlinearly varying frequency", by A. P. Filippov (Khar'kov).
6) "Some problems in the dynamics of an ideally elastic stretched thread", by V. A. Svetlitskiy (Moscow).
7) "On the similarity of dynamic processes in solid bodies", by A. G. Nazarov (Yerevan).
8) "The problem of constructional hysteresis", by Ya. G. Panovko (Riga).
9) "Constructional hysteresis in resin-metallic shock absorbers", by G. I. Strakhov (Riga).
The conference was closed with a speech by M. M. Filonenko-Borodich (Moscow).

Card 1/2

Card 2/2

APPROVED FOR RELEASE: 08/23/2000 CIA-RDP86-00513R001549620011-2"

"APPROVED FOR RELEASE: 08/23/2000 CIA-RDP86-00513R001549620011-2

S/124/60/000/006/028/039
A005/A001

26.2141

Translation from: Referativnyy zhurnal, Mekhanika, 1960, No. 6, p. 147, # 7819

AUTHOR: Shkenev, Yu.S.

TITLE: The Deformation of a Free Cylindric Shell Under Pulse Action

PERIODICAL: Inzhenernyy sb., 1958, Vol. 26, pp. 54-58

TEXT: The author considers the behavior of an elastic infinitely long circular cylindric shell, free resting in the space, under the action of an asymmetric shock load. The problem is considered as two-dimensional, the quadratic terms are taken into account in the expression of the deformation. The equation of the problem is solved by the Bubnov method. As a result, an infinite system of inseparable nonlinear equations of second order with respect to the time function is obtained, which is solved by the successive approximation method under the assumption that the nonlinearity is sufficiently small. Two approximations are found. It is numerically exemplified.

K.M. Tuchina

Translator's note: This is the full translation of the original Russian abstract.

Card 1/1

APPROVED FOR RELEASE: 08/23/2000 CIA-RDP86-00513R001549620011-2"

"APPROVED FOR RELEASE: 08/23/2000 CIA-RDP86-00513R001549620011-2

SHKEMEV, Yu.S., Cand Phys Math Sci -- (diss) "Certain problems in the dynamics of elastic systems." Mos /Pub House of Acad Sci USSR/, 1959, 6 pp (Acad Sci USSR. Inst of Mechanics) 150 copies (KL, 28-59, 123)

APPROVED FOR RELEASE: 08/23/2000 CIA-RDP86-00513R001549620011-2"

"APPROVED FOR RELEASE: 08/23/2000 CIA-RDP86-00513R001549620011-2

SHKENEV, Yu.S. (Moskva)

Vibration of a ductile string. Inzh.sbor. 27:81-86 '60.
(MIRA 13:6)

(Elastic rods and wires--Vibration)

APPROVED FOR RELEASE: 08/23/2000 CIA-RDP86-00513R001549620011-2"

"APPROVED FOR RELEASE: 08/23/2000 CIA-RDP86-00513R001549620011-2

27795

10.7500 1103 1327 2607

S/508/60/028/000/007/022
D237/D305

AUTHOR: Shkenev, Yu. S. (Moscow)

TITLE: Non-linear oscillations of a circular ring

PERIODICAL: Akademiya nauk SSSR. Otdeleniye tekhnicheskikh nauk. Inzhenernyy sbornik, v. 28, 1960, 82 - 86

TEXT: In this work the author investigates forces oscillations of a closed ring under a uniform load applied periodically. Oscillations occur in plane of the ring, rotation is absent, inertia of rotation and displacements are not considered. Solution of a linear problem supplies critical loads and frequencies, but deflections and post critical behavior require non-linear equations. The differential equation of the motion of elements of a piston with large displacements is

$$\left[\frac{1}{p}(D\varkappa)''\right]' + p(D\varkappa)' = -f_1 + \left(\frac{1}{p}f_2\right)' \qquad (1)$$

where p - curvature in the deformed state, $\varkappa$ - curvature incre-

Card 1/5

APPROVED FOR RELEASE: 08/23/2000 CIA-RDP86-00513R001549620011-2"

"APPROVED FOR RELEASE: 08/23/2000 CIA-RDP86-00513R001549620011-2

ment, D - bending rigidity, f_1 and f_2 - tangential and normal components of stresses and inertial forces w.r. to deformed piston axis and where $f_1 = Z_* = j_1$; $f_2 = X_* = j_2$ ($j_{1,2}$ = inertial forces) - means d/d_s, where s - an arc. When internal force vectors rotate together with a transverse cross-section of a piston while remaining parallel to their initial directions

$$X_* = X, \quad Z_* = X\sin\psi, \quad X_* = X\cos\psi, \qquad (2)$$

where ψ - increment of angle of rotation of the cross-section, $X = q_0 + q_t \cos\theta t$ - given load, normal to non-deformed axis of the piston, θ - frequency. If deflections during the unstable state are comparable with the diameter of the cross-section, but small compared with the radius, then the longitudinal axis deformation is

$$\varepsilon = \frac{\partial v}{\partial s} - \frac{w}{R} + \frac{1}{2}\left(\frac{\partial w}{\partial s}\right)^2 \qquad (3)$$

APPROVED FOR RELEASE: 08/23/2000 CIA-RDP86-00513R001549620011-2"

"APPROVED FOR RELEASE: 08/23/2000 CIA-RDP86-00513R001549620011-2

while the curvature increment is

$$\varkappa = \frac{\alpha\psi}{\alpha s} = \frac{1}{R^2}\left(\frac{\partial^2 w}{\partial\varphi^2} + \frac{\partial v}{\partial\varphi}\right), \qquad (4)$$

where $w = w(\varphi, t)$ and $v = v(\varphi, t)$ are normal and tangential displacements on the axis of the ring, R - radius, φ - angular coordinate. The author finally obtains a system of equations for the stable amplitude $A_k = \sqrt{a_k^2 + b_k^2}$. For the principal parametric resonance k = 1,

$$[\Omega^2(1 \pm \mu) - \frac{\theta^2}{4}] - \frac{1}{4}\Lambda^2[3\gamma - \alpha\theta^2 + 3\gamma_1(q_0 \pm q_t)] = 0 \qquad (23)$$

and for further values of k,

$$(\Omega^2 - \frac{k^2\theta^2}{4}) - \frac{1}{4}\Lambda^2(3\gamma - \alpha k^2\theta^2 + 3\gamma_1 q_0) = 0. \qquad (24)$$

APPROVED FOR RELEASE: 08/23/2000 CIA-RDP86-00513R001549620011-2"

"APPROVED FOR RELEASE: 08/23/2000 CIA-RDP86-00513R001549620011-2

27795

S/508/60/028/000/007/022
D237/D305

Non-linear oscillations of ...

If

$$\eta = \frac{\theta}{2\Omega}, \qquad \Delta = \frac{3(\gamma + \gamma_1 q_0)}{4\Omega^2} - \alpha\eta^2,$$

then

$$A = \sqrt{\frac{1 \pm \mu - \eta^2}{\Delta}}; \qquad A = \sqrt{\frac{1 - k^2 n^2}{\Delta}}$$

for the principal and k-th resonance respectively. In case of static load, i.e. y(t) = const.

$$L(w, v, t) = \frac{D}{R^4}\left(\frac{\partial^5 w}{\partial\varphi^5} + 2\frac{\partial^3 w}{\partial\varphi^3} + \frac{\partial w}{\partial\varphi}\right) + \rho\left(\frac{\partial\ddot{w}}{\partial\varphi} - \int_0^\varphi w\,d\xi + \frac{1}{2R}\int_0^\varphi\left(\frac{\partial w}{\partial\xi}\right)^2 d\xi\right) -$$
$$- \frac{D}{R^5}\left(\frac{\partial w}{\partial\varphi}\frac{\partial^2 w}{\partial\varphi^2} + 3\frac{\partial^3 w}{\partial\varphi^3}\frac{\partial^2 w}{\partial\varphi^2} + \frac{\partial w}{\partial\varphi}\frac{\partial^4 w}{\partial\varphi^4}\right) + \qquad (5)$$
$$+ \frac{q_0 + q_t\cos\theta t}{R}\left(\frac{\partial^3 w}{\partial\varphi^3} + \frac{\partial w}{\partial\varphi} - \frac{1}{R}\frac{\partial w}{\partial\varphi}\frac{\partial^2 w}{\partial\varphi^2}\right) = 0.$$

Card 4/5

APPROVED FOR RELEASE: 08/23/2000 CIA-RDP86-00513R001549620011-2"

"APPROVED FOR RELEASE: 08/23/2000 CIA-RDP86-00513R001549620011-2

gives the equations for determining deflections in the post-critical state. There are 1 figure and 7 references: 6 Soviet-bloc and 1 non-Soviet-bloc. The reference to the English-language publication reads as follows: P. Byrd, M. Friedman, Handbook of Elliptic Integral for Engineers and Physicists, Berlin-Gottingen, 1954.

APPROVED FOR RELEASE: 08/23/2000 CIA-RDP86-00513R001549620011-2"

"APPROVED FOR RELEASE: 08/23/2000 CIA-RDP86-00513R001549620011-2

ACCESSION NR: AT4039444 S/2879/64/000/000/0997/1007

AUTHOR: Shkenev, Yu. S. (Moscow)

TITLE: The dynamics of an elastic and elastic-viscous shell filled with an ideal liquid

SOURCE: Vsesoyuznaya konferentsiya po teorii obolochek i plastin. 4th, Yerevan, 1962. Teoriya obolochek i plastin (Theory of plates and films); trudy* konferentsii, 1964 997-1007

TOPIC TAGS: shell, elastic shell, Maxwell medium, elastic viscous shell, shell dynamics, shell vibration, ideal liquid, nonlinear shell theory

ABSTRACT: The vibrations of an elastic and elastic-viscous shell, partially filled with a ponderable ideal liquid, are considered. In the solution of the nonlinear problem of the vibrations of a shell filled with a liquid, use is made of the hypotheses of the nonlinear theory of shells. The frequencies of the small bound oscillations of shell and liquid, the frequencies of the nonlinear vibrations and the critical frequencies of disturbing loads are determined. In a first section the equations describing the movement of the elements of the shell and liquid are derived, after which small oscillations and parametric resonance are considered. An infinite system of differential equations for the oscillations of the liquid is obtained on the supposition that the shift vector for particles of an ideal liquid

Card 1/4

APPROVED FOR RELEASE: 08/23/2000 CIA-RDP86-00513R001549620011-2"

"APPROVED FOR RELEASE: 08/23/2000 CIA-RDP86-00513R001549620011-2

ACCESSION NR: AT4039444

may be expanded into a series for a whole system of functions. If the real liquid is a system with a limited number of lower forms of vibrations, the frequencies of which are considerably lower than the lowest frequencies of the elastic oscillations, then the latter have practically no effect on the vibration frequencies of the liquid. With respect to the dynamics of the elastic cavity, the lower forms of the liquid have little effect on the vibration frequencies of the cavity. However, in addition to the magnitude of the joined masses of liquid corresponding to each form of elastic oscillations, the interaction between them, caused by the movement of the liquid, is also taken into account. The non-linear problem is formulated in accordance with Vol'mir (A. S. Vol'mir. Gibkiye plastinki i obolochki. GITTL, 1956) and Bolotin (V. V. Bolotin. Nekonservativny*ye zadachi teorii uprugoy ustoychivosti. M., GIFML, 1961) with the equations for function F and for function φ of the plane stress state, averaged for the thickness of the envelope, presented in the form:

$$\left.\begin{aligned} L(F) + \varkappa_T(1+\nu)D\nabla^2\varphi - R^2 Z &= 0, \\ \frac{1}{Eh_*}\nabla^4\Phi = L(w) - R^2\varkappa_T\nabla^2 T_0 \end{aligned}\right\} \qquad (1)$$

Card 2/4

APPROVED FOR RELEASE: 08/23/2000 CIA-RDP86-00513R001549620011-2"

"APPROVED FOR RELEASE: 08/23/2000 CIA-RDP86-00513R001549620011-2

ACCESSION NR: AT4039444

where (L(F) is the operator, $\varkappa_T$ is the coefficient of temperature expansion; ψ is the temperature gradient; T_0 (α, β) is the temperature of the middle surface, and

$$Z = \frac{1}{R^2}\left[\frac{\partial^2\Phi}{\partial\beta^2}\frac{\partial^2 w}{\partial\alpha^2} + \left(1 + \frac{\partial^2}{\partial\beta^2}\right) w \frac{\partial^2\Phi}{\partial\alpha^2} + R\frac{\partial^2\Phi}{\partial\alpha} + 2\frac{\partial^2 w}{\partial\alpha\partial\beta}\frac{\partial^2\Phi}{\partial\alpha\partial\beta}\right] + \\ + F_{Tp} + \mu_{00}\ddot{w} + p(t)\left[1 - \frac{1}{R}\left(1 + \frac{\partial^2}{\partial\beta^2}\right) w\right], \tag{2}$$

$$L(w) = \left(\frac{\partial^2 w}{\partial\alpha\partial\beta}\right)^2 - \frac{\partial^2 w}{\partial\alpha^2}\frac{\partial^2 w}{\partial\beta^2} - R\frac{\partial^2 w}{\partial\alpha^2},$$

where F_{TP} is the dissipative force. Finally, the oscillations of an elastic-viscous shell are considered on the assumption that linear relationships exist between the stress tensors, the stress velocity tensors and the strain velocity tensors. The analysis is based on the

Card 3/4

APPROVED FOR RELEASE: 08/23/2000 CIA-RDP86-00513R001549620011-2"

"APPROVED FOR RELEASE: 08/23/2000 CIA-RDP86-00513R001549620011-2

ACCESSION NR: AT4039444

expression for a uniform and isotropic Maxwell medium with plane stress state. An equation of the 7th order with respect to Ω is derived for the individual tone of the vibrations of an elastic-viscous shell with liquid. Orig. art. has: 33 formulas and 1 figure.

ASSOCIATION: None

SUBMITTED: 00 DATE ACQ: 14May64 ENCL: 00

SUB CODE: AS, ME NO REF SOV: 006 OTHER: 000

4/4

Card

APPROVED FOR RELEASE: 08/23/2000 CIA-RDP86-00513R001549620011-2"

"APPROVED FOR RELEASE: 08/23/2000 CIA-RDP86-00513R001549620011-2

ACCESSION NR: AP4037106 S/0258/64/004/002/0314/0317

AUTHOR: Shkenev, Yu. S. (Moscow)

TITLE: Gyroscopic system with an infinite number of degrees of freedom

SOURCE: Inzhenernyy zhurnal, v. 4, no. 2, 1964, 314-317

TOPIC TAGS: torsional oscillation, chain system, free oscillation, gyroscope, stabilizer

ABSTRACT: The author studies the free torsional oscillations of a rod with concentrated masses at the ends and a gyroscope and the torsional oscillations of an elastic chain system with distributed mass. He also studies oscillations of a gyroscopic system with an electrical circuit of stabilizers as a mechanical system with an infinite number of degrees of freedom in the presence of gyroscopic forces. He obtains an equation for the eigenvalues and an approximate solution for perturbing exterior loads. The chain system satisfies a partial differential equation of the form

$$\mu_k \frac{\partial^2 \theta}{\partial t^2} - D_k \frac{\partial^2 \theta}{\partial z^2} = 0, \qquad (1)$$

Card 1/3

APPROVED FOR RELEASE: 08/23/2000 CIA-RDP86-00513R001549620011-2"

"APPROVED FOR RELEASE: 08/23/2000 CIA-RDP86-00513R001549620011-2

ACCESSION NR: AP4037106

with boundary conditions,

$$J_0\ddot{\theta}(0,t) = D_1\theta'(0,t),\ J_n\ddot{\theta}(l,t) = -D_n\theta'(l,t), \qquad (2)$$

conditions of conjuction at the points $z = a_k$

$$\theta(l_k - 0, t) = \theta(l_k + 0, t),\ F_k\ddot{\theta}(l_k, t) = D_{k+1}\theta'(l_k + 0, t) - D_k\theta'(l_k - 0, t) \quad (3)$$

and initial conditions

$$\theta(z, 0) = f(z), \theta(z, 0) = f_k(z). \qquad (4)$$

The author treats the case of a shaft of length a with a mass M_0 at one end and a gyroscope at the other ($z = a$). Then instead of the second boundary condition (2), for $z = a$,

$$A\ddot{\theta}(a, t) + \frac{H^2}{B}\theta(a, t) = -D\theta'(a, t),\ \beta(t) = \frac{H}{B}\theta(a, t) \quad . \quad (5)$$

He studies oscillations and stability of a gyroscopic structure with a stabilizer which imposes a moment $M_B = m\bar{\alpha}$ on the mass M_0, where $\bar{\alpha}$ is the force due to the current at the armature of the stabilizer and m is a coefficient of proportion-

Card 2/3

APPROVED FOR RELEASE: 08/23/2000 CIA-RDP86-00513R001549620011-2"

"APPROVED FOR RELEASE: 08/23/2000 CIA-RDP86-00513R001549620011-2

ACCESSION NR: AP4037106

ality. The system of equations for the oscillations of the structure is

$$\mu\ddot{\theta} - D\theta'' = m\Phi\sigma_1,$$
$$L\Phi + \eta C\dot{\theta}(0, t) + R\Phi + \mu_* (\beta - \tau\dot{\beta}) = 0, \qquad (6)$$
$$D\dot{\beta} - H\theta(l, t).$$

The second equation of (6) represents the equation of oscillations of an electrical circuit of a stabilizer. Orig. art. has: 19 formulas and 2 figures.

ASSOCIATION: none

SUBMITTED: 23Jan62 DATE ACQ: 05Jun64 ENCL: 00

SUB CODE: AS, GP NO REF SOV: 002 OTHER: 001

Card 3/3

APPROVED FOR RELEASE: 08/23/2000 CIA-RDP86-00513R001549620011-2"