"APPROVED FOR RELEASE: 08/23/2000 CIA-RDP86-00513R001550720020-9

SAVCHENKO, M.K.; SINEGUBOV, V.I.

Boundary layers between domains in transformer steel. Izv. AN SSSR. Ser. fiz. 25 no.12:1449-1452 D '61. (MIRA 14:12)

1. Institut fiziki Sibirskogo otdeleniya AN SSSR.
(Ferrosilicon)
(Crystals--Magnetic properties)
(Boundary layer)

APPROVED FOR RELEASE: 08/23/2000 CIA-RDP86-00513R001550720020-9"

"APPROVED FOR RELEASE: 08/23/2000 CIA-RDP86-00513R001550720020-9

L 17600-63 EWT(1)/EWP(q)/EWT(m)/BDS/ES(s)-2 S/056/63/044/003/001/053
AFFTC/ASD/ESD-3/IJP(C)/SSD Pt-4 JD 70
69

AUTHOR: Savchenko, M. K. and Sinegubov, V. I.

TITLE: Investigation of boundary layers between domains in ferromagnetic substances

PERIODICAL: Zhurnal eksperimental'noy i teoreticheskoy fiziki, v. 44, no. 3, 1963, 781-792

TEXT: Following the pioneering work of L. D. Landau and Ye. M. Lifshitz (Ref. 2: Phys. Zs. Sowjetunion, 8, 153, 1935) on uniaxial crystals, various other researchers developed a theory of boundary layers for ordinary and magnetized multi-axial crystals. Because of the small dimensions of the boundary layers, earlier experiments yielded only certain approximate values for the size of these layers. To test the theory more closely, the authors studied in their previous experiments (Ref. 12: Iz. AN SSSR, seriya fiz., 25, 599, 1961; 25, 1449, 1961) the width of the layers as well as the distribution of magnetization within the layers using the polar Kerr effect. In the present paper they use essentially the same tape registering method for the study of basic boundary

Card 1/2

APPROVED FOR RELEASE: 08/23/2000 CIA-RDP86-00513R001550720020-9"

"APPROVED FOR RELEASE: 08/23/2000 CIA-RDP86-00513R001550720020-9

L 27600-63

S/056/63/044/003/001/053

Investigation of boundary layers...

types of transformer steel, nickel, and cobalt crystals. They found that along the sections of boundaries delineating the change in orientation of spontaneous magnetization there is a fair agreement with the results of theoretical calculations. The width and the shape of the boundary depend on the properties of the separated domains and the boundary in iron silicide is one order of magnitude larger than in cobalt, and another order of magnitude smaller than in nickel. An increase in temperature widens the boundary, and at temperatures at which the anisotropy constant becomes zero or changes its sign, the boundary "dissolves." Mechanical stresses substantially change the distribution of spin orientation within the layer as well as the size of the layers. There are 11 figures.

ASSOCIATION: Institut fiziki Sibirskogo otdeleniya Akademii nauk SSSR (Physics Institute of the Siberian Branch of the Academy of Sciences USSR)

SUBMITTED: July 20, 1962

Card 2/2

APPROVED FOR RELEASE: 08/23/2000 CIA-RDP86-00513R001550720020-9"

"APPROVED FOR RELEASE: 08/23/2000 CIA-RDP86-00513R001550720020-9

ACCESSION NR: AP4023405 S/0048/64/028/003/0545/0552

AUTHOR: Kirenskiy, L.V.; Drokin, A.I.; Dy*lgerov, V.D.; Sudakov, N.I.; Sinegubov, V.I

TITLE: Domain structure in ferrites and its dynamics in varying and rotating magnetic fields [Report, Symposium on Ferromagnetism and Ferroelectricity held in Leningrad 30 May to 5 June 1963]

SOURCE: AN SSSR: Izvestiya. Seriya fizicheskaya, v.28, no.3, 1964, 545-552

TOPIC TAGS: ferrite, domain structure, ferrite domain structure, garnet ferrite, garnet ferrite domain structure, spinel ferrite, spinel ferrite domain structure, hexagonal ferrite domain structure, double domain structure, domain wall fine structure

ABSTRACT: The domain structure of a number of ferrite single crystals having the garnet, spinel or hexagonal structure was investigated. The powder method of W.S. Elmore (Phys.Rev.51,10,1092, 1938) was employed to reveal the domains. The polarity of the domain boundaries was determined with the aid of the polar Kerr effect, employing a previously described technique (V.D.Dy*lgerov and A.I.Drokin, Kristallografiya,5,6,945,1960); A.I.Drokin, V.D.Dy*lgerov and B.V.Beznosikov, Ibid.9,3,465,

Card 1/3

APPROVED FOR RELEASE: 08/23/2000 CIA-RDP86-00513R001550720020-9"

"APPROVED FOR RELEASE: 08/23/2000 CIA-RDP86-00513R001550720020-9

ACCESSION NR: AP4023405

1962). The Yb, Ho, Er and Gd garnet ferrites were obtained as single crystals from melts. Lead hexaferrite was also prepared in this way. Crystals of Co-Fe, Mn-Fe and Mg-Mn ferrites with the spinel structure were grown in an oxy-hydrogen flame. Spheres of 4 to 8 mm diameter were obtained. These wer annealed above the Curie point and oriented in a magnetic field. The planes to be investigated were ground flat, polished and treated with hot sulfuric acid to destroy surface mosaic. Lead hexaferrite was found to have a domain structure similar to that of cobalt. The ferrites with the garnet structure had very complex domain structures, for which it does not seem possible to construct a model. "Stringy" walls, double banded walls, and curved walls were observed in different materials. The curved domain walls of gadolinium ferrite garnet would shift under the influence of an applied magnetic field. The domain structure of the spinel ferrites was somewhat less complex. The presence of double domain structure was established. Successive walls would have opposite polarity, and in the presence of a gradually increasing magnetic field alternate walls would first disappear, the remaining walls disappearing only when the field became stronger. Sometimes a single domain wall would separate into two under the influence of a field; in such a case the two new walls would have the same polarity as the old, thus interrupting the regular alternation of polarity. Wide do-

Card 2/3

APPROVED FOR RELEASE: 08/23/2000 CIA-RDP86-00513R001550720020-9"

"APPROVED FOR RELEASE: 08/23/2000 CIA-RDP86-00513R001550720020-9

ACCESSION NR: AP4023405

main walls were observed in which a fine structure could be perceived. Such complex walls exhibited alternations of polarity, as though they were composed of several walls having opposite polarities. It is suggested that the double domain structure of ferrites may be due to the interaction between the two magnetic sublattices, each striving to establish its own domain pattern. Orig.art.has: 5 figures.

ASSOCIATION: Institut fiziki Sibirskogo otdeleniya Akademii nauk SSSR (Institute of Physics, Siberian Division, Academy of Sciences, SSSR)

SUBMITTED: 00 DATE ACQ: 10Apr64 ENCL: 00

SUB CODE: PH NR REF SOV: 014 OTHER: 010

Card 3/3

APPROVED FOR RELEASE: 08/23/2000 CIA-RDP86-00513R001550720020-9"

"APPROVED FOR RELEASE: 08/23/2000 CIA-RDP86-00513R001550720020-9

L 50962-65 EWT(1)/EWT(m)/EWP(i)/T/EWP(t)/EEC(b)-2/EWP(b) Pi-4 IJP(c) JD/GG

ACCESSION NR: AP5011443 UR/0048/65/029/004/0617/0619

34
32
8

AUTHOR: Savchenko, M. K.; Sinegubov, V.I.; Kazulin,V.A.; Turpanov,I.A.

TITLE: The Bloch wall considered as a thin magnetic film /Report, Second All-Union Symposium on the Physics of Thin Ferromagnetic Films held in Irkutsk, 10-15 July 1964/

SOURCE: AN SSSR. Izvestiya. Seriya fizicheskaya, v. 29, no. 4, 1965, 617-619

TOPIC TAGS: ferromagnetic thin film, domain structure

ABSTRACT: It has long been known that individual Bloch walls may consist of sections of different polarity. Recently a theoretical explanation of the observed indications of varying polarity of wall sections has been advanced by S. Shtrikman and D.Treves (J. Appl. Phys., 31, Suppl. 147, 1960). The calculations of these authors are briefly reviewed. The experimental part of the present study consisted of observation of domain walls by means of the scanning apparatus developed by the authors and used earlier for recording the distribution of magnetization across domain walls (M.K.Savchenko and V.I.Sinegubov, Zhur. eksp. i teor. fiz., 44, 781, 1963). The equipment is based on use of the polar Kerr effect, and incorporates a

Card 1/3

APPROVED FOR RELEASE: 08/23/2000 CIA-RDP86-00513R001550720020-9"

"APPROVED FOR RELEASE: 08/23/2000 CIA-RDP86-00513R001550720020-9

L 50962-65

ACCESSION NR: AP5011443 2.

narrow slit under which the specimen is slowly displaced. The results of the observations are summarized in schematic form in the figure (Enclosure 01). The intervals of wall polarity (T in the figure) were found to be very nearly identical along a given wall, in some crystals T equalled 40 to 42 microns. As compared with the results of Shtrikman and Treves, the observed domain width proved to be about half the predicted value, which may be taken as reasonably good agreement in view of the fact that the calculations were performed for uniaxial crystals, whereas the observed silicon iron was, as usual, triaxial. The conclusion is that regular domain structure also obtains in the Bloch walls themselves; accordingly, a Bloch wall may be regarded as a distinctive type of thin film. Orig. art. has: 2 formulas and 4 figures.

ASSOCIATION: Institut fiziki Sibirskogo otdeleniya Akademii nauk SSSR (Physics Institute, Siberian Division, Academy of Sciences, SSSR); Krasnoyarskiy gosudarstvennyy pedagogicheskiy institut (Krasnoyarsk State Pedagogical Institute)

SUBMITTED: 00 - ENCL: 01 SUB CODE: EM, EC

NR REF SOV: 002 OTHER: 002

Card 2/3

APPROVED FOR RELEASE: 08/23/2000 CIA-RDP86-00513R001550720020-9"

"APPROVED FOR RELEASE: 08/23/2000 CIA-RDP86-00513R001550720020-9

L 50962-65

ACCESSION NR: AP5011443 ENCLOSURE: 01

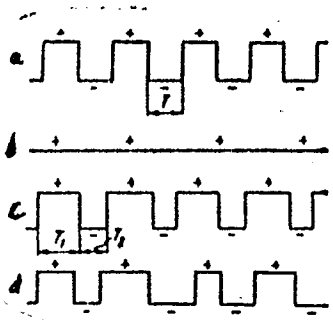

Structure of domain walls in different states: a - after annealing, b - in a field, c - after removal of the field, d - after demagnetization by an alternating field of diminishing amplitude.

Card 3/3

APPROVED FOR RELEASE: 08/23/2000 CIA-RDP86-00513R001550720020-9"

"APPROVED FOR RELEASE: 08/23/2000 CIA-RDP86-00513R001550720020-9

L 8548-66 EWT(1) IJP(c)

SOURCE CODE: UR/0056/65/049/003/0713/0719

ACC NR: AP5024686

AUTHOR: Drokin, A. I.; Sinegubov, V. I.

ORG: Institut fiziki Sibirskogo otdeleniya Akademii nauk SSSR) Institute of Physics, Siberian Department of the Academy of Sciences SSSR

TITLE: Investigation of the boundary layers between domains in some ferrites with spinel structure

SOURCE: Zhurnal eksperimental'noy i teoreticheskoy fiziki, v. 49, no. 3, 1965, 713-719

TOPIC TAGS: ferrite, magnetic domain boundary, magnetic domain structure, Kerr effect, magnetization, metal heat treatment, manganese containing alloy, cobalt containing alloy, nickel containing alloy, crystal lattice parameter

ABSTRACT: This is a continuation of an earlier investigation of domain boundaries in ferrites (Izv. AN SSSR ser. fiz. v. 28, 545, 1964), and deals with the domain boundaries in single crystals of iron-manganese, iron-cobalt, and iron-nickel ferrites, and with the influence of heat treatment on the changes in the boundary layers between domains. The single crystals were grown by the Verneuil method and

Card 1/3

APPROVED FOR RELEASE: 08/23/2000 CIA-RDP86-00513R001550720020-9"

"APPROVED FOR RELEASE: 08/23/2000 CIA-RDP86-00513R001550720020-9

L 8548-66

ACC NR AP5024686

their properties established by chemical and x-ray diffraction analysis. The investigation procedure, which is based on the Kerr effect, is described in detail. A study was made of the width of domain boundaries, their polarity, the magnetization distribution in them, and the influence of heat treatment on the width of the domain boundaries. Plots are given of the distribution of magnetization in the boundaries of 180° and 71° neighborhoods. The results show that in the initial state the boundary domain width lies within 2.8--4.2 in iron-manganese ferrite, within 0.25--0.35 in iron-cobalt ferrite, and within 8.9--9.5 for 180° boundaries and within 3.5--4.0 for the 71° boundaries in iron-nickel ferrite. When there is a change in the structure of the iron-manganese ferrite, a double domain system is observed, with boundaries exhibiting asymmetric magnetization distribution. The magnetization distribution is uniform in the 180° boundaries in the iron-cobalt and iron-nickel ferrites. In the iron-nickel ferrite the magnetization distribution is asymmetric in the 71° boundaries. The boundary polarity is random and may vary even within the same boundary if the latter is split by obstacles. In ferrites sensitive to heat treatment (iron-cobalt and iron-nickel) the boundary decreases after heat treatment, the absolute values of the first magnetocrystalline anisotropy constants increase, and the lattice parameters decrease only slightly. These changes agree with Neels theory. Orig. art. has: 5 figures and 2 formulas.

Card 2/3

APPROVED FOR RELEASE: 08/23/2000 CIA-RDP86-00513R001550720020-9"

"APPROVED FOR RELEASE: 08/23/2000 CIA-RDP86-00513R001550720020-9

L 8548-66

ACC NR: AP5024686

SUB CODE: SS, EM/ SUBM DATE: 11Feb65/ ORIG REF: 010/ OTH REF: 005

0

jw

Card 3/3

APPROVED FOR RELEASE: 08/23/2000 CIA-RDP86-00513R001550720020-9"

"APPROVED FOR RELEASE: 08/23/2000 CIA-RDP86-00513R001550720020-9

SINEGUBOV, Yu.

Development of all-purpose automotive transport in the White Russian S.S.R. Avt.transp. 33 no.5:5-6 My '55. (MIRA 8:8)
(White Russia--Transportation, Automotive)

APPROVED FOR RELEASE: 08/23/2000 CIA-RDP86-00513R001550720020-9"

"APPROVED FOR RELEASE: 08/23/2000 CIA-RDP86-00513R001550720020-9

SINEGUBOV, Yu.

New tariffs for automotive freight transportation inside the U.S.S.R. Avt. transp. 37 no.5:31-33 My '59. (MIRA 12:8)
(Transportation, Automotive--Rates)

APPROVED FOR RELEASE: 08/23/2000 CIA-RDP86-00513R001550720020-9"

"APPROVED FOR RELEASE: 08/23/2000 CIA-RDP86-00513R001550720020-9

SINEGUBOV, Yu.

New organization of automotive transportation units. Avt.transp. 38 no.1:31-32 Ja '60. (MIRA 13:5)
(Transportation, Automotive)

APPROVED FOR RELEASE: 08/23/2000 CIA-RDP86-00513R001550720020-9"

"APPROVED FOR RELEASE: 08/23/2000 CIA-RDP86-00513R001550720020-9

KITAYEV, A.; SINEGUBOV, Yu.

New standards for pallets. Avt.transp. 39 no.2:14-17 F '61. (MIRA 14:3)

(Unitized cargo systems—Equipment and supplies)

APPROVED FOR RELEASE: 08/23/2000 CIA-RDP86-00513R001550720020-9"

"APPROVED FOR RELEASE: 08/23/2000 CIA-RDP86-00513R001550720020-9

SHEGUBOV, Yu.

Regulations for transportation rates should be specified.
Avt.transp. 40 no.5:38 My '62. (MIRA 15:5)
(Transportation, Automotive--Rates)

APPROVED FOR RELEASE: 08/23/2000 CIA-RDP86-00513R001550720020-9"

"APPROVED FOR RELEASE: 08/23/2000 CIA-RDP86-00513R001550720020-9

PAVLOVICHEV, Mikhail Stepanovich; SINEGUBOV, Yulian Konstantinovich; SMIRNOV, O.S., red.; GALAKTIONOVA, Ye.N., tekhn. red.

[Automotive transportation rates in the U.S.S.R.] Tarify na avtomobil'nom transporte SSSR. Moskva, Avtotransizdat, 1963. 215 p. (MIRA 16:6)
(Transportation, Automotive--Rates)

APPROVED FOR RELEASE: 08/23/2000 CIA-RDP86-00513R001550720020-9"

"APPROVED FOR RELEASE: 08/23/2000 CIA-RDP86-00513R001550720020-9

SINEGUBOVA, Antonina Ivanovna

(elastotonometriya) of the Question of Early Diagnostics of Glaucoma

Dissertation for Candidate of a Medical Science degree. Chair of Eye Diseases (head, Prof. I.A. Belyayev) Saratov Medical Institute, 1943.

APPROVED FOR RELEASE: 08/23/2000 CIA-RDP86-00513R001550720020-9"

"APPROVED FOR RELEASE: 08/23/2000 CIA-RDP86-00513R001550720020-9

SINEGUBOVA, L. S.

USSR/Electricity - Dielectrics Dec 51

"Effect of Displacing Field on Magnitude of Dielectric Permeability and Dielectric Loses in $BaTiO_3$," Ye. V. Sinyakov, Ye. A. Stafaychuk, L. S. Sinegubova, Dnepropetrovsk State U

"Zhur Eksper i Teoret Fiz" Vol XXI, No 12, pp 1396-1402

Study of thermal behavior of dielec permeability and losses of $BaTiO_3$ under effect of displacing elec field showed shift of Curie point toward higher temp. Found sharp drop of tangent of angle of dielec losses and smoothing of its characteristic max under superposition of strong displacing field. Observed distortion of hysteresis loop under displacing field effect. Submitted 27 Jan 51.

198T13

APPROVED FOR RELEASE: 08/23/2000 CIA-RDP86-00513R001550720020-9"

"APPROVED FOR RELEASE: 08/23/2000 CIA-RDP86-00513R001550720020-9

CZECHOSLOVAKIA

SEDLACEK, J., LEJSEK, K., SINEK, J; Chair of Pathological Physiology, Chair of Chemistry, Chair of Physiology, Medical Faculty, Charles University (Katedra Patologicke Fysiologie, Katedra Chemie, Katedra Fysiologie Lek. Fak. KU), Hradec Kralove.

"The Influence of Diphosgene and of Anhydrides of N-Carboxy-amino Acids on Breathing of Mitochondrias."

Prague, Ceskoslovenska Fysiologie, Vol 15, No 2, Feb 66, pp 75-76

Abstract: The influence of diphosgene and of anhydrides of N-carboxyamino acids on the activity of succinate oxydase of mitochondrias of isolated rat liver was investigated. An addition of 0.137 mg of diphosgene in 0.015 ml of 96% ethanol added to 3 ml of a suspension of isolated mitochondria stopped their breathing. Similar addition of 0.1 mg of N-carboxyanhydride of vanillin had no influence on breathing. 2 Czech, 1 East German reference. Submitted at "16 Days of Physiology" at Kosice, 27 Sep, 65.

1/1

APPROVED FOR RELEASE: 08/23/2000 CIA-RDP86-00513R001550720020-9"

"APPROVED FOR RELEASE: 08/23/2000 CIA-RDP86-00513R001550720020-9

SINEKAYEVA, P.M.

7

2059. Quantitative determination of sulphur and silicon by means of a steeloscope. A. S. Andrianov, V. N. Razvodovskaya and P. M. Sinekaeva. *Uch. Zap. Sverdlov. Univ.* 1954, 40, 107–114; *Ref. Zhur., Khim.*, 1955, Abstr. No. 23,980.—Conditions for determining S (0·04 to 1 per cent.) in solutions, and Si (2·5 to 9·5 per cent.) in aluminium alloys by means of a Sventitskii activated a.c. arc and a steeloscope are described. G. S. SMITH

3 : M.A. YOUTZ
Scopics

APPROVED FOR RELEASE: 08/23/2000 CIA-RDP86-00513R001550720020-9"

"APPROVED FOR RELEASE: 08/23/2000 CIA-RDP86-00513R001550720020-9

SIREL'NIK, M.

Perfecting production. Sov. profsoiuzy 7 no.17:4 S '59.
(MIRA 12:11)

1.Predsedatel' tsekhovogo komiteta profsoyuza Kiyevskogo regenerativno-rezinovogo zavoda, g. Kiyev.
(Kiev--Rubber, Reclaimed)

APPROVED FOR RELEASE: 08/23/2000 CIA-RDP86-00513R001550720020-9"

"APPROVED FOR RELEASE: 08/23/2000 CIA-RDP86-00513R001550720020-9

SINEL'NIK, V.K.; LOSENKO, A.N.

High-power ferrite-transistorized decoder with a short-circuited turn for 512 outputs. Avtom.i prib. no.4:38-41 O-D '62. (MIRA 16:1)

1. Lisichanskiy filial Instituta avtomatiki Luganskogo soveta narodnogo khozyaystva.

(Electronic analog computers)

APPROVED FOR RELEASE: 08/23/2000 CIA-RDP86-00513R001550720020-9"

"APPROVED FOR RELEASE: 08/23/2000 CIA-RDP86-00513R001550720020-9

SINEL'NIKOV, FNU

USSR/Electricity - Motors, Induction Sep 51

"Concerning G. I. Shturman's Article 'Open Squirrel Cages in Squirrel-Cages Induction Motors'," N. K. Arkhangel'skiy, A. A. Minin, K. A. Chefranov, Engineers, "Glavenergoneft'"; G. V. Molchanov, Engr "Gripronefteмash"

"Elektrichestvo" No 9, pp 81,82

The 1st group, from "Glavenergoneft'," state that Shturman's method is quite unsatisfactory and cite expts conducted by Sinel'nikov and Zemlvanyy in the All-Union Elec Eng Inst, in which slotting of the end rings reduced the efficiency of the motors tested by 4.5-5% and the power factor by 17-19%, while increasing the starting torque by only 5-36%. Molchanov gives examples of successful application of Shturman's method.

PA 196T55

APPROVED FOR RELEASE: 08/23/2000 CIA-RDP86-00513R001550720020-9"

"APPROVED FOR RELEASE: 08/23/2000 CIA-RDP86-00513R001550720020-9

SINEL'NIKOV, A.

Aerial prospectors of the earth's interior. Znan. sila 31 no.8: 14-16 Ag '56. (MLRA 9:10)

(Aeronautics in geology) (Radioactive substances)

APPROVED FOR RELEASE: 08/23/2000 CIA-RDP86-00513R001550720020-9"

"APPROVED FOR RELEASE: 08/23/2000 CIA-RDP86-00513R001550720020-9

SINEL'NIKOV, A. (Leningrad)

No.1 automobile radio station. Zdorov'e 2 no.9:29 S '56. (MLRA 9:10)
(MOSCOW--AMBULANCE SERVICE)
(RADIO--INSTALLATION IN AUTOMOBILES)

APPROVED FOR RELEASE: 08/23/2000 CIA-RDP86-00513R001550720020-9"

"APPROVED FOR RELEASE: 08/23/2000 CIA-RDP86-00513R001550720020-9

STAL'MAKOVA, V.A.; SINEL'NIKOV, A.M.

Some features of water metabolism in desert rodents. Dokl. AN Tadzh. SSR 2 no. 5:43-48 '59. (MIRA 13:12)

1. Institut zoologii i parazitologii AN Tadzhikskoy SSR. Predstavleno chlenom-korrespondentom AN Tadzhikskoy SSR M.N. Narzikulovym.
(Rodentia) (Desert fauna) (Water in the body)

APPROVED FOR RELEASE: 08/23/2000 CIA-RDP86-00513R001550720020-9"

"APPROVED FOR RELEASE: 08/23/2000 CIA-RDP86-00513R001550720020-9

KORSUNSKIY, M.I., doktor fiziko-matematicheskikh nauk, professor; LAGUNOV, A.S., kandidat tekhnicheskikh nauk; BAYVEL', L.P., kandidat tekhnicheskikh nauk; SINEL'NIKOV, A.N., kandidat tekhnicheskikh nauk.

Indicator for registering changes in clearances in steam turbines. Energomashinostroenie 3 no.5:26 My '57. (MLRA 10:6)
(Steam turbines)

APPROVED FOR RELEASE: 08/23/2000 CIA-RDP86-00513R001550720020-9"

"APPROVED FOR RELEASE: 08/23/2000 CIA-RDP86-00513R001550720020-9

S/115/60/000/05/25/034
B007/B011

AUTHORS: Korsunskiy, M. I., Lagunov, A. S., Bayvel', L. P., Sinel'nikov, A. N.

TITLE: Use of Radioactive Isotopes for the Measurement of Vapor Moistness

PERIODICAL: Izmeritel'naya tekhnika, 1960, No. 5, pp 50-52

TEXT: A method of measuring vapor moistness is offered here. It bases on the determination of vapor density after absorption of β-particles. A radioactive sulfur isotope was used for the purpose. Investigations were first conducted in the laboratory. Source activity and counter were selected, the optimum distance between isotope and counter as well as the absorption coefficient were determined. The experimental setup shown in Fig. 1 served for the investigations. The setup is briefly described along with the investigation course. An aluminum vessel prepared for the purpose and shown in Fig. 2 was used as source. Radiometer Б-2 (B-2) served as recording device. To determine the vapor density it was necessary to determine the mass absorption coefficient of

Card 1/3

APPROVED FOR RELEASE: 08/23/2000 CIA-RDP86-00513R001550720020-9"

"APPROVED FOR RELEASE: 08/23/2000 CIA-RDP86-00513R001550720020-9

Use of Radioactive Isotopes for the Measurement of Vapor Moistness

S/115/60/000/05/25/034
B007/B011

electrons for which no data were found in publications. The mass absorption coefficient μ' was first determined in the experimental way in the laboratory as the tangent of the inclination angle of curve $\ln \frac{I}{I_0} = f(\varrho d)$. I_0 is the intensity of the electron beam before passing through the material layer, and I the intensity after passing through a layer of a thickness d. ϱ is the absorber density. In this way, $\mu' = 197\ cm^2/g$ was found for overheated vapor. The vapor density ϱ was then determined from formula (4). With a view to testing the method described here, the system shown in Fig. 3 was assembled at the Khar'kovskiy turbinnyy zavod (Khar'kov Turbine Works). The section through the measured portion is shown in the same figure and described. In this test, $\mu' = 200\ cm^2/g$ was found for overheated vapor which fits the value obtained in the laboratory. The moistness degree φ was determined from the μ' and ϱ values obtained. It is pointed out in conclusion that the investigations carried out have proven the possibility of measuring the mean moistness in a vapor flow without drawing off,

Card 2/3

APPROVED FOR RELEASE: 08/23/2000 CIA-RDP86-00513R001550720020-9"

"APPROVED FOR RELEASE: 08/23/2000 CIA-RDP86-00513R001550720020-9

Use of Radioactive Isotopes for the Measurement of Vapor Moistness

S/115/60/000/05/25/034
B007/B011

irrespective of the state and the drop size of the moistness contained in the vapor. There are 3 figures and 1 table.

V
C

Card 3/3

APPROVED FOR RELEASE: 08/23/2000 CIA-RDP86-00513R001550720020-9"

"APPROVED FOR RELEASE: 08/23/2000 CIA-RDP86-00513R001550720020-9

SINEL'NIKOV, A.N. (Moskva)

Traveler with a camera; Z.Z. Vinogradov's 80th birthday. Priroda 51 no.12:114 D '62. (MIRA 15:12)
(Vinogradov, Zakhar Zakharovich, 1882-)

APPROVED FOR RELEASE: 08/23/2000 CIA-RDP86-00513R001550720020-9"

"APPROVED FOR RELEASE: 08/23/2000 CIA-RDP86-00513R001550720020-9

PROCESSES AND PROPERTIES INDEX

F

4813. CONTINUOUS ACTION GENERATOR FOR WATER GAS. Vol'pe, G.S. and Sinel'nikov, A.S. (U.S.S.R.P. 68,142, 31 May 1947; title in Chem. Abstr. 1949, vol. 43, 6397).

ASM-SLA METALLURGICAL LITERATURE CLASSIFICATION

APPROVED FOR RELEASE: 08/23/2000 CIA-RDP86-00513R001550720020-9"

"APPROVED FOR RELEASE: 08/23/2000 CIA-RDP86-00513R001550720020-9

Sinel'nikov, A.S.

2707. REACTIVITY OF SHALE COKE IN RELATION TO STEAM. Sinel'nikov, A.S. and Ramadzin, E.S. (Trud. Vsesoyuz. nauch.-issled. Inst. Pererab. Slanc. (Proc. Inst. Treat. Shale, U.S.S.R.), 1955, (3), 60-71; abstr. in Ref. Zh. Khim. (Ref. J. Chem. Moscow), 1956, (6), 16985). The reaction of different shale cokes with steam was studied in a 20 mm quartz tube in long, also of tar coke from the pyrolysis of shale tar at 630 to 1100°C. It was established that low temperature shale coke produced in a rotary retort is the most reactive, and the tar coke the least with a reactivity similar to that of c coke; that the reactivity of chamber coke does not depend much on the method of its subsequent treatment; that different shale cokes have similar reactivities, lying between those of coal coke and peat coke. In order to diminish the carbon dioxide content of the gas produced, one is recommended to use the gas itself for cooling the coke in ovens with bottom outlets for the steam-gas mixture, and not steam as is usual, since at cooling zone temperatures around 750°C the carbon dioxide formed by dissociation of carbonates cannot be reduced to carbon dioxide at all completely. When the ovens have top outlets for the gas, steam cooling should increase the yield of water gas through further gasification of the coke taking place at high temperatures.

APPROVED FOR RELEASE: 08/23/2000 CIA-RDP86-00513R001550720020-9"

"APPROVED FOR RELEASE: 08/23/2000 CIA-RDP86-00513R001550720020-9

Sinel'nikov, A. S.

The effect of pyrolysis conditions on the hydrogen sulfide content of shale gases. E. S. Bezmozgin, A. S. Sinel'nikov, and E. A. Lotos. *Trudy Vsesoyuz. Nauch.-Issledovatel. Inst. po Pererabotke Slantsev*, 1955, No. 3, 72-5; *Referat. Zhur., Khim.* 1955, Abstr. No. 58272.—The H_2S content in the gas obtained from Baltic shales decreases with the lengthening of the pyrolysis zone and the increase of the zone temp.; it increases with the productivity acceleration of the chamber. It had been suggested that lowering the H_2S can be explained by its interaction with the mineral part of the shale coke. For clarification of this question comparative tests are performed by passing gas (contg. 0.5-1.3% H_2S) through shale coke, marble, porcelain, and lime. No H_2S absorption is observed when passing the gas through marble and porcelain while, when working with coke and lime even at 500°, less than 50% of the H_2S remains free, indicating a reaction with the mineral part of the coke. This applies mainly to the Ca and Mg oxides and also to their carbonates. With the temp. increase, the H_2S content decreases sharply, and at 900° is only 4-5%. N. Vasileff

5
4E4j
4E3d

1/1

APPROVED FOR RELEASE: 08/23/2000 CIA-RDP86-00513R001550720020-9"

"APPROVED FOR RELEASE: 08/23/2000 CIA-RDP86-00513R001550720020-9

SINEL'NIKOV, A.S.

Ignition limits of shale gas. Trudy VNIIPS no.3:120-124 '55.
(MLRA 8:12)
(Baltic Sea region--Oil shales) (Hydrocarbons)

APPROVED FOR RELEASE: 08/23/2000 CIA-RDP86-00513R001550720020-9"

"APPROVED FOR RELEASE: 08/23/2000 CIA-RDP86-00513R001550720020-9

SINEL'NIKOV, A.S.

Processing Kashpir shale in gas generators of the Kohtla-Jarve plant. Trudy VNIIPS no.3:209-218 '55. (MLRA 8:12)
(Baltic Sea region--Oil shales) (Hydrocarbons)

APPROVED FOR RELEASE: 08/23/2000 CIA-RDP86-00513R001550720020-9"

"APPROVED FOR RELEASE: 08/23/2000 CIA-RDP86-00513R001550720020-9

BEZMOZGIN, E.S.; SINEL'NIKOV, A.S.

Shale-gas generators of higher productive capacity. Trudy VNIIPS no.4:63-84 '55. (MIRA 13:4)
(Oil shales) (Gas producers)

APPROVED FOR RELEASE: 08/23/2000 CIA-RDP86-00513R001550720020-9"

"APPROVED FOR RELEASE: 08/23/2000 CIA-RDP86-00513R001550720020-9

Sinel'nikov, A.S.

3

4221. HIGH TEMPERATURE DECOMPOSITION OF VOLATILE PRODUCTS FROM LOW TEMPERATURE CARBONISATION OF BALTIC SHALES. Bezmezgin, E.S. and Sinel'nikov, A.S. (Trud. Vsesoyuz. nauch.-issled Inst. Pererab. Slan. ~~(Proc. Inst. Treat.~~ Shale, U.S.S.R.), 1955, (4), 92-99; abstr. in Ref. Zh. Khim. (Ref. J. Chem., Moscow), 1956, (16), 51858). A 15 mm quartz tube 1 m long had 300 mm of its length filled with shale and 400 mm with shale coke in 3 to 5 mm grains. With the time of contact between the steam-gas mixture and the incandescent coke constant at 8 to 9 sec and the temperature in the pyrolysis zone increasing from 700 to 1000°C the yield of gas increased from 0.36 to 0.62 cu.m/kg of shale, but the concentration of saturated and unsaturated hydrocarbons in it decreased, and likewise the calorific value of the gas. However the total yield of heat for a given quantity of shale increased. Increasing the contact time at constant temperature gave the same results. Variation in the composition and volume of gas from low temperature carbonisation during pyrolysis was studied in a quartz tube filled with shale coke which had been carbonised up to the temperature of the experiment. The contact time in these experiments was 3 to 6 sec. at 700 to 1000°C. In every case there was an increase in gas volume (up to 60 to 70% at 90°) and in the hydrogen content of the gas (owing to pyrolysis of hydrocarbons). The presence of steam in the pyrolysis zone decreased the depth of pyrolysis of hydrocarbons and enabled hydrocarbon conversion reactions to develop.

APPROVED FOR RELEASE: 08/23/2000 CIA-RDP86-00513R001550720020-9"

"APPROVED FOR RELEASE: 08/23/2000 CIA-RDP86-00513R001550720020-9

SINEL'NIKOV, A.S.; BEZMOZGIN, E.S.

Gasification of shale coke. Trudy VNIIPS no.4:113-124 '55.
(MIRA 13:4)

(Oil shales)

APPROVED FOR RELEASE: 08/23/2000 CIA-RDP86-00513R001550720020-9"

"APPROVED FOR RELEASE: 08/23/2000 CIA-RDP86-00513R001550720020-9

SINEL'NIKOV, A.S.; BEZMOZGIN, E.S.

Uniflow semicoking of shale with circulation of a heat transfer agent. Trudy VNIIPS no.5:96-100 '56. (MLRA 10:5)
(Oil shales)

APPROVED FOR RELEASE: 08/23/2000 CIA-RDP86-00513R001550720020-9"

"APPROVED FOR RELEASE: 08/23/2000 CIA-RDP86-00513R001550720020-9

MITYUREV, A.K.; SINEL'NIKOV, A.S.

Processing low-grade shale in compartment kilns. Trudy VNIIPS no.5:120-132 '56. (MLRA 10:5)

(Oil shales--Refining)

APPROVED FOR RELEASE: 08/23/2000 CIA-RDP86-00513R001550720020-9"

"APPROVED FOR RELEASE: 08/23/2000 CIA-RDP86-00513R001550720020-9

BEZMOZGIN, E.S.; ITSIKSON, B.S. ; SINEL'NIKOV, A.S.

Obtaining high caloric gas from shale in a uniflow pyrolytic gas generator. Trudy VNIIPS no.5:142-153 '56. (MLRA 10:5)
(Oil shale--Refining)

APPROVED FOR RELEASE: 08/23/2000 CIA-RDP86-00513R001550720020-9"

"APPROVED FOR RELEASE: 08/23/2000 CIA-RDP86-00513R001550720020-9

SINEL'NIKOV, A.S.; VAYNSHTEYN, Ya.I.

Care of refractory material in gas-producing shale compartment kilns. Trudy VNIIPS no.5:172-188 '56. (MLRA 10:5)
(Oil shales--Refining)
(Refractory materials)

APPROVED FOR RELEASE: 08/23/2000 CIA-RDP86-00513R001550720020-9"

"APPROVED FOR RELEASE: 08/23/2000 CIA-RDP86-00513R001550720020-9

SINEL'NIKOV, A.S.

Technical aspects of the processing of oil shales in the U.S.S.R.
Trudy VNIIPS no.6:5-23 '58. (MIRA 11:8)
(Oil shales)

APPROVED FOR RELEASE: 08/23/2000 CIA-RDP86-00513R001550720020-9"

"APPROVED FOR RELEASE: 08/23/2000 CIA-RDP86-00513R001550720020-9

BARSHCHEVSKIY, M.M.; BEZMOZGIN, E.S.; ZAGLODIN, L.S.; SINEL'NIKOV, A.S.

Problem of efficient processing organization for shale retorts. (MIRA 11:8)
Trudy VNIIPS no.6:39-50 '58.
(Gas retorts) (Oil shales--Refining)

APPROVED FOR RELEASE: 08/23/2000 CIA-RDP86-00513R001550720020-9"

"APPROVED FOR RELEASE: 08/23/2000 CIA-RDP86-00513R001550720020-9

SINEL'NIKOV, A.S.; TEREKHOV, S.L.; SOTNIKOV, M.A.

Studying the descent of fuel and movement of gases in shale retorts using nonworking models. Trudy VNIIPS no.6:51-63 '58. (MIRA 11:8)

(Gas retorts) (Oil shales)

APPROVED FOR RELEASE: 08/23/2000 CIA-RDP86-00513R001550720020-9"

"APPROVED FOR RELEASE: 08/23/2000 CIA-RDP86-00513R001550720020-9

BEZMOZGIN, E.S.; SINEL'NIKOV, A.S.

Processing fine shales in gas retorts. Trudy VNIIPS no.6:64-69 '58. (MIRA 11:8)

(Gas retorts) (Oil shales)

APPROVED FOR RELEASE: 08/23/2000 CIA-RDP86-00513R001550720020-9"

"APPROVED FOR RELEASE: 08/23/2000 CIA-RDP86-00513R001550720020-9

SINEL'NIKOV, A.S.; MITYUREV, A.K.; BEZMOZGIN, E.S.

Determining over-all standards for the compartment retort section of the shale gas plant in Slantsy. Trudy VNIIPS no.6: 80-102 '58. (MIRA 11:8)

(Oil shales) (Gas retorts)

APPROVED FOR RELEASE: 08/23/2000 CIA-RDP86-00513R001550720020-9"

"APPROVED FOR RELEASE: 08/23/2000 CIA-RDP86-00513R001550720020-9

BEZMOZGIN, E.S.; VAYNSHTEYN, Ya.I.; SINEL'NIKOV, A.S.

Pyrolysis of shale tar in compartment retorts. Trudy VNIIPS no.6:103-106 '58. (MIRA 11:8)

(Tar)

APPROVED FOR RELEASE: 08/23/2000 CIA-RDP86-00513R001550720020-9"

"APPROVED FOR RELEASE: 08/23/2000 CIA-RDP86-00513R001550720020-9

BARSHCHEVSKIY, M.M.; BEZMOZGIN, E.S.; ZAGLODIN, L.Z.; SINEL'NIKOV, A.S.; SHUVALOV, V.I.

High production oil-shale retorts. Gaz. prom. no. 7:7-11 Jl '58. (MIRA 11:7)

(Oil shales)
(Gas retorts)

APPROVED FOR RELEASE: 08/23/2000 CIA-RDP86-00513R001550720020-9"

"APPROVED FOR RELEASE: 08/23/2000 CIA-RDP86-00513R001550720020-9

BARSHCHEVSKIY, M.M.; BEZMOZGIN, E.S.; SINEL'NIKOV, A.S.; SHUVALOV, V.I.

Shale-gas producers with a central feed for the heat-carrying agent. Trudy VNIIPS no.7:120-146 '59. (MIRA 12:9)
(Gas retorts)

APPROVED FOR RELEASE: 08/23/2000 CIA-RDP86-00513R001550720020-9"

"APPROVED FOR RELEASE: 08/23/2000 CIA-RDP86-00513R001550720020-9

VAYNSHTEYN, Ya.I.; BEZMOZGIN, E.S.; SINEL'NIKOV, A.S.

Studying the thermal decomposition of shale in chambers of shale-gas retorts. Trudy VNIIPS no.7:147-158 '59. (MIRA 12:9)
(Oil shales) (Gas retorts)

APPROVED FOR RELEASE: 08/23/2000 CIA-RDP86-00513R001550720020-9"

"APPROVED FOR RELEASE: 08/23/2000 CIA-RDP86-00513R001550720020-9

BEZMOZGIN, E.S., BARSHCHEVSKIY, M.M., SINEL'NIKOV, A.S., ZAGLODIN, L.S.

Industrial experience in increasing the capacity of oil shale gas producers. Gaz.prom. 5 no.2:17-19 F '60. (MIRA 13:6)
(Gas producers) (Oil shales)

APPROVED FOR RELEASE: 08/23/2000 CIA-RDP86-00513R001550720020-9"

"APPROVED FOR RELEASE: 08/23/2000 CIA-RDP86-00513R001550720020-9

BARSHCHEVSKIY, M.M.; BEZMOZGIN, E.S.; NEMCHENKO, A.G.; SINEL'NIKOV, A.S.

Experimental-plant testing of a newly designed reactor for the continuous thermal-contact gasification of liquid fuel. Gaz.prom. 5 no.10:12-16 O '60. (MIRA 13:10)

(Liquid fuels) (Gas manufacture and works)

APPROVED FOR RELEASE: 08/23/2000 CIA-RDP86-00513R001550720020-9"

"APPROVED FOR RELEASE: 08/23/2000 CIA-RDP86-00513R001550720020-9

BARSHCHEVSKIY, M.M.; BEZMOZGIN, E.S.; VASIL'YEVA, M.M.; ZAGLODIN, L.S.; SINEL'NIKOV, A.S.

Efficient system of processing Baltic oil shales. Trudy VNIIT no.9: 4-9 '60. (MIRA 13:11)

(Oil shales)

APPROVED FOR RELEASE: 08/23/2000 CIA-RDP86-00513R001550720020-9"

"APPROVED FOR RELEASE: 08/23/2000 CIA-RDP86-00513R001550720020-9

BEZMOZGIN, E.S.; BARSHCHEVSKIY, M.M.; SINEL'NIKOV, A.S.; ZAGLODIN, L.S.

Increasing the capacity of pinch-type shale gas producers used at the combine in Kohtla-Jarve. Trudy VNIIT no.9:27-30 '60. (MIRA 13:11)

(Kohtla-Jarve—Gas producers)

APPROVED FOR RELEASE: 08/23/2000 CIA-RDP86-00513R001550720020-9"

"APPROVED FOR RELEASE: 08/23/2000 CIA-RDP86-00513R001550720020-9

SINEL'NIKOV, A.S.; BEZMOZGIN, E.S.; KOBYL'SKAYA, M.V.

Effect of the regime applied in processing oil shales on the composition and properties of gas-producer tar. Trudy VNIIT no.9:31-39 '60. (MIRA 13:11)

(Oil shales) (Coal tar)

APPROVED FOR RELEASE: 08/23/2000 CIA-RDP86-00513R001550720020-9"

"APPROVED FOR RELEASE: 08/23/2000 CIA-RDP86-00513R001550720020-9

SINELNIKOV, A. S.; [illegible], A. G.; [illegible], I. L.

Gasification of shredded peat with illuminating gas. Trudy VNIIT no. 11:81-87 '62. (MIRA 17:5)

APPROVED FOR RELEASE: 08/23/2000 CIA-RDP86-00513R001550720020-9"

"APPROVED FOR RELEASE: 08/23/2000 CIA-RDP86-00513R001550720020-9

BARSHCHEVSKIY, Mark Moiseyevich; BEZMOZGIN, Emmanuil Samuilovich; SHAPIRO, Roal'd Natanovich; SINEL'NIKOV, A.S., nauchnyy red.; SEGAL', Z.G., ved. red.; YASHCHURZHINSKAYA, A.B., tekhn. red.

[Handbook on refining oil shales]Spravochnik po pererabotke goriuchikh slantsev. [By]M.M.Barshchevskii, E.S.Bezmozgin, R.N. Shapiro, Leningrad, Gostoptekhizdat, 1963. 238 p. (MIRA 16:3)

(Oil shales)

APPROVED FOR RELEASE: 08/23/2000 CIA-RDP86-00513R001550720020-9"

"APPROVED FOR RELEASE: 08/23/2000 CIA-RDP86-00513R001550720020-9

[illegible]; [illegible], [illegible] [deceased]; [illegible]

[illegible] the reactivity of peat charcoal. [illegible] no.13: [illegible] '64. (MIRA 18:2)

APPROVED FOR RELEASE: 08/23/2000 CIA-RDP86-00513R001550720020-9"

"APPROVED FOR RELEASE: 08/23/2000 CIA-RDP86-00513R001550720020-9

[illegible], M.M., [illegible], [illegible], V-INSHTEYN, [illegible]
SINEL'NIKOV, A.S.

Extracting phenols from a vapor-gas mixture in a centrifugal tar separator. Trudy VNIIT no.12:90-96 '63. (MIRA 18:11)

APPROVED FOR RELEASE: 08/23/2000 CIA-RDP86-00513R001550720020-9"

"APPROVED FOR RELEASE: 08/23/2000 CIA-RDP86-00513R001550720020-9

[illegible], E. [illegible], [illegible], [illegible], [illegible], [illegible]

Cent of pyrolysis of shale tar as a method for increasing the yield of low boiling phenols. Trudy [illegible] 18:11 '63.

APPROVED FOR RELEASE: 08/23/2000 CIA-RDP86-00513R001550720020-9"

"APPROVED FOR RELEASE: 08/23/2000 CIA-RDP86-00513R001550720020-9

SINEL'NIKOV, A.V.; GOR'KOVA, A.A., vedushchiy redaktor; SHIKIN, S.T., tekhnicheskiy redaktor.

[Control and measuring instruments in boring] Kontrol'no-izmeritel'nye pribory v burenii. Moskva, Gos.nauchno-tekhn. izd-vo neft.i gorno-toplivnoi lit-ry, 1957. 150 p. (MLRA 10:4)

(Oil well drilling)
(Measuring instruments)

APPROVED FOR RELEASE: 08/23/2000 CIA-RDP86-00513R001550720020-9"

"APPROVED FOR RELEASE: 08/23/2000 CIA-RDP86-00513R001550720020-9

[illegible]IKOV, A.V.

At the Leipzig exhibition. Neftianik 2 no.7:35 Jl '57.
(MLRA 10:8)

1. Nachal'nik konstruktorskogo byuro neftyanogo priborostroyeniya.
(Leipzig--Petroleum--Exhibitions)

APPROVED FOR RELEASE: 08/23/2000 CIA-RDP86-00513R001550720020-9"

"APPROVED FOR RELEASE: 08/23/2000 CIA-RDP86-00513R001550720020-9

TOROCHKOV, Ivan Mikhaylovich; SIMEL'NIKOV, Aleksandr Vasil'yevich; MATSKIN, Leonid Arkad'yevich; SLUTSKIY, Lev Borisovich; GIL'BERT, Stepan Fomich; ALEKSANDROV, Adol'f Moritsovich; RASTOVA, G.V., vedushchiy red.; FEDOTOVA, I.G., tekhn.red.

[Automatic filling of petroleum products tank trucks] Avtomaticheskii naliv nefteproduktov v avtomobil'nye tsisterny. Moskva, Gos.nauchno-tekhn.izd-vo neft. i gorno-toplivnoi lit-ry, 1960. 83 p. (MIRA 14:3)

(Tank trucks)

APPROVED FOR RELEASE: 08/23/2000 CIA-RDP86-00513R001550720020-9"

"APPROVED FOR RELEASE: 08/23/2000 CIA-RDP86-00513R001550720020-9

PHASE I BOOK EXPLOITATION SOV/5180

Sinel'nikov, Aleksandr Vasil'yevich

Avtomatizatsiya i sredstva kontrolya bureniya neftyanykh i gazovykh skvazhin (Automation and Means of Controlling the Drilling of Petroleum and Gas Wells) Moscow, Gostoptekhizdat, 1960. 366 p. 6,100 copies printed.

Executive Ed.: A.A. Gor'kova; Tech. Ed.: E.A. Mukhina.

PURPOSE: This textbook is intended for students in mining and petroleum schools of higher education. It may also be useful to technical personnel in drilling enterprises.

COVERAGE: This book on the automation of drilling operations is divided into three parts. Part I includes basic data on metrology and measuring instruments, principles and designs of universal elements of measuring devices, instruments for automatic control and regulation, and general purpose instruments used in drilling. Part II lists and describes measurement methods, physical principles, and designs of special instruments for the control and study of drilling conditions

Card ~~1/8~~

APPROVED FOR RELEASE: 08/23/2000 CIA-RDP86-00513R001550720020-9"

"APPROVED FOR RELEASE: 08/23/2000 CIA-RDP86-00513R001550720020-9

SINEL'NIKOV, A.V., ISAKOVICH, P.Ya., MAMIKONOV, A.G.

Principles for complete automation and remote control in petroleum production enterprises. Neft. khoz. 38 no.61-6 '60. (MIRA 13:7)

(Oil fields--Production methods) (Automatic control) (Remote control)

APPROVED FOR RELEASE: 08/23/2000 CIA-RDP86-00513R001550720020-9"

"APPROVED FOR RELEASE: 08/23/2000 CIA-RDP86-00513R001550720020-9

ALEKSANDROV, A.M., inzh.; BAZHENOV, V.S., inzh.; BOBROVNIKOV, B.N., inzh.; VAGANOV, M.P., inzh.; GUREVICH, B.M., inzh.; DZHIBELLI, V.S., inzh.; DROBAKH, V.T., inzh.; ISAKOVICH, R.Ya., kand. tekhn. nauk; KAPUSTIN, A.G., inzh.; KONENKOV, K.S., inzh.; MININ, A.A., kand.tekhn.nauk; PEVZNER, V.B., inzh.; PESKIN, G.L., inzh.; PORTER, L.G., inzh.; PRYADILOV, A.N., inzh.; SLUTSKIY, L.B., inzh.; FEDOSOV, I.V., inzh.; FRENKEL', B.A., inzh.; TSIMBLER, Yu.A., inzh.; SHUL'GIN, V.Kh., inzh.; ESKIN, M.G., kand. tekhn. nauk; VOROB'YEV, D.T., inzh. [deceased]; SINEL'NIKOV, A.V., kand. tekhn. nauk; SHENDLER, Yu.I., kand. tekhn. nauk, red.; NESMELOV, S.V., inzh., zam. glav. red.; NOVIKOVA, M.M., ved. red.; RASTOVA, G.V., ved. red.; SOLGANIK, G.Ya., ved. red.; VORONOVA, V.V., tekhn. red.

[Automation and apparatus for controlling and regulating production processes in the petroleum and petroleum chemical industries] Avtomatizatsiia, pribory kontrolia i regulirovaniia proizvodstvennykh protsessov v neftianoi i neftekhimicheskoi promyshlennosti. Moskva, Gostoptekhizdat. Book 3. [Control and automation of the processes of well drilling, recovery, transportation, and storage of oil and gas] Kontrol' i avtomatizatsiia protsessov bureniia skvazhin, dobychi, transporta i khraneniia nefti i gaza. 1963. 551 p. (MIRA 16:7)

(Automation)

(Petroleum [illegible] Equipment and supplies)

APPROVED FOR RELEASE: 08/23/2000 CIA-RDP86-00513R001550720020-9"

"APPROVED FOR RELEASE: 08/23/2000 CIA-RDP86-00513R001550720020-9

SINEL'NIKOV, A.P.; [illegible], V.S.; ADAMOVICH, S.I.; [illegible], I.A.

Basic problems in the automatic control of a pipeline operating in a "pump to pump" regime. Neft. khoz. 43 no.6:45-51 Je '65. (MIRA 18:7)

APPROVED FOR RELEASE: 08/23/2000 CIA-RDP86-00513R001550720020-9"

"APPROVED FOR RELEASE: 08/23/2000 CIA-RDP86-00513R001550720020-9

S/146/62/005/005/012/016
D201/D308

AUTHORS: Sergeyev, K. N. and Sinel'nikov, A. Ye.

TITLE: Filtering compensating accelerometer

PERIODICAL: Izvestiya vysshikh uchebnykh zavedeniy. Priborostroyeniye, v. 5, no. 5, 1962, 98-106

TEXT: The authors describe the construction and give the theory of an accelerometer which makes it possible to measure, within a given frequency range, accelerations with negligible dynamic distortion and to filter out at the same time the amplitude of the base vibrations in the output signal. The filtering accelerometer consists of two oscillating circuits connected in series, each having a predetermined frequency characteristic. With proper choice of damping coefficients of the oscillating circuits it is possible to obtain the overall required frequency response, both with respect to the measured and non-measured frequencies. The above type of filtering compensating accelerometer makes it possible, as compared with a single-mass one, to extend considerably

Card 1/2

APPROVED FOR RELEASE: 08/23/2000 CIA-RDP86-00513R001550720020-9

"APPROVED FOR RELEASE: 08/23/2000 CIA-RDP86-00513R001550720020-9

ACCESSION NR: AP4041341 S/0115/64/000/005/0016/0018

AUTHOR: Sinel'nikov, A. Ye.

TITLE: Increasing the accuracy of pendulous instruments

SOURCE: Izmeritel'naya tekhnika, no. 5, 1964, 16-18

TOPIC TAGS: pendulum, pendulum theory, pendulous instrument, vibrating base pendulum operation

ABSTRACT: The operation of a pendulum under conditions of horisontal and vertical acceleration and point-of-suspension vibration is theoretically investigated. Lagrange equations are set up using the swing angle and weight travel along the pendulum rod as generalized coordinates. For a small swing angle, the Lagrange equations are reduced to Mathieu equations which permit assessing the errors due to acceleration and vibration. It is found that both lateral acceleration and pendulum-base vibration result in either a lower accuracy or a narrower

Card 1/2

APPROVED FOR RELEASE: 08/23/2000 CIA-RDP86-00513R001550720020-9"

"APPROVED FOR RELEASE: 08/23/2000 CIA-RDP86-00513R001550720020-9

ACCESSION NR: AP4041341

measurement range of the pendulous instrument. An arrangement for pendulous instruments suggested earlier by the author (Author's Certificate no. 680348 of 27Sep61), wherein two degrees of freedom for the weight are provided, practically eliminates the errors due to lateral and gravity acceleration. Formulas are developed which describe the swinging of a pendulum equipped with a vibrating suspension point and permit computing the angular shift. These formulas were experimentally verified by direct microscope observations. Orig. art. has: 1 figure and 32 formulas.

ASSOCIATION: none

SUBMITTED: 00 ENCL: 00

SUB CODE: ME, IE NO REF SOV: 005 OTHER: 000

Card 2/2

APPROVED FOR RELEASE: 08/23/2000 CIA-RDP86-00513R001550720020-9"

"APPROVED FOR RELEASE: 08/23/2000 CIA-RDP86-00513R001550720020-9

L 27344-66

ACC NR: AP6007698 SOURCE CODE: UR/0413/66/000/003/0077/0077

AUTHORS: Shkalikov, V. S.; Sinel'nikov, A. Ye.

ORG: none

28
B

TITLE: An electrodynamic vibration stand. Class 42, No. 178536 [announced by All-Union Scientific Research Institute of Metrology imeni D. I. Mendeleyev (Vsesoyuznyy nauchno-issledovatel'skiy institut metrologii)]

SOURCE: Izobreteniya, promyshlennyye obraztsy, tovarnyye znaki, no. 3, 1966, 77

TOPIC TAGS: electrodynamics, vibration measurement, magnetic effect

ABSTRACT: This Author Certificate presents an electrodynamic vibration stand. The stand contains a magnetizing coil and a moving system with a coil which produces the vibrations. The moving system is set in motion by the interaction of magnetic fluxes. The design increases the operational path of the moving system. A potentiometer is mounted in the device for converting the displacement of the operational path of the moving system to an electric signal (see Fig. 1). This signal is fed to the coil of the moving system to create a force directed counter to the exciting force. The latter is produced by the interaction of the magnetic

Card 1/2 UDC: 620.178.53:538.2.004

APPROVED FOR RELEASE: 08/23/2000 CIA-RDP86-00513R001550720020-9"

"APPROVED FOR RELEASE: 08/23/2000 CIA-RDP86-00513R001550720020-9

L 27344-66

ACC NR: AP6007698

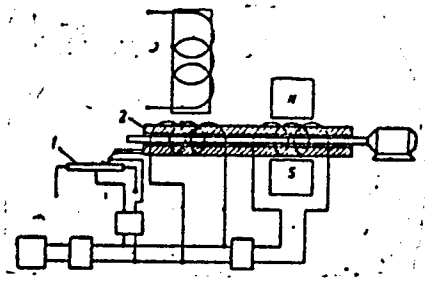

Fig. 1. 1 - potentiometer; 2 - moving system.

fluxes. A speed sensing element is mounted in the moving system. The voltage from the sensing element is fed to the coil of the moving system to compensate the back emf in the system. This back emf is created by stray magnetic fluxes. Orig. art. has: 1 figure.

SUB CODE: 09, 14/ SUBM DATE: 17Jun64

Card 2/2 PB

APPROVED FOR RELEASE: 08/23/2000 CIA-RDP86-00513R001550720020-9"

"APPROVED FOR RELEASE: 08/23/2000 CIA-RDP86-00513R001550720020-9

L 13346-66 EWT(1)/EWT(m)/EWP(w)/EWP(c)/ETC(m) IJP(c) WW/EM

ACC NR: AP6002329 SOURCE CODE: UR/0373/65/000/006/0130/0131

AUTHOR: Sinel'nikov, A. Ye. (Leningrad)

ORG: none

41
B

TITLE: Pendulum lead on a vibrating base under action of elliptic vibrations

24

SOURCE: AN SSSR. Izvestiya. Mekhanika, no. 6, 1965, 130-131

TOPIC TAGS: pendulum mechanics, pendulum motion, elliptic function, phase shift, approximation method

21, 44, 55

ABSTRACT: The two-dimensional motion of a pendulum is studied under two types of damping motions. The motion of the pendulum base is given by

$$x = x_0 \cos \omega t, \qquad y = y_0 \cos (\omega t + \varepsilon)$$

and, for a damping motion proportional to the absolute magnitude of the angular speed, the governing differential equation is given by

$$J \frac{d^2\alpha}{dt^2} + N \frac{d\alpha}{dt} + mgr \sin \alpha = -m \frac{d^2x}{dt^2} r \cos \alpha + m \frac{d^2y}{dt^2} r \sin \alpha$$

For small α this equation is integrated by successive approximations, and for the lead angle the final result is

Card 1/2

APPROVED FOR RELEASE: 08/23/2000 CIA-RDP86-00513R001550720020-9"

"APPROVED FOR RELEASE: 08/23/2000 CIA-RDP86-00513R001550720020-9

L 13346-66

ACC NR: AP6002329

$$\alpha_1 = -\frac{1}{2}\frac{a_1 a_2}{g^2}\frac{1 - z^2}{(1 - z^2)^2 + 4\delta^2 z^2}\left(\cos\varepsilon - 2\frac{\delta z}{1 - z^2}\sin\varepsilon\right)$$

$$z = \omega / k, \quad a_1 = x_0\omega^2, \quad a_2 = y_0\omega^2, \quad \delta = h / k$$

The maximum value of α_1 is also calculated relative to the phase shift ϵ, and it is found that increasing the pendulum damping decreases the lead angle α_1. A similar analysis is made when the damping coefficient is taken proportional to the relative angular speed, with the angular shift of the base given by

$$\beta = \beta_0 \cos(\omega t + \psi)$$

The corresponding maximum value of the lead angle α_2 is given by

$$\alpha_{2*} = -\frac{1}{2}\frac{a_2}{g}\frac{-2\beta_0\delta z + a_1 / g}{\sqrt{(1 - z^2)^2 + 4\delta^2 z^2}}$$

Orig. art. has: 15 equations.

SUB CODE: 20/ SUBM DATE: 21Dec64/ ORIG REF: 004

Card 2/2 FW

APPROVED FOR RELEASE: 08/23/2000 CIA-RDP86-00513R001550720020-9"

"APPROVED FOR RELEASE: 08/23/2000 CIA-RDP86-00513R001550720020-9

SINEL'NIKOV, D.K.; BUZOL, F.I.; STEPANOVA, G.I.

On the iodide method of purifying zirconium. Atom.energ. 4 no. 2:169-174 F '58. (MIRA 11:4)
(Zirconium--Metallurgy)

APPROVED FOR RELEASE: 08/23/2000 CIA-RDP86-00513R001550720020-9"

"APPROVED FOR RELEASE: 08/23/2000 CIA-RDP86-00513R001550720020-9

[illegible], aspirant; [illegible], inzh.

Regulation of the temperatur of the pads of garment ironing presses. Report No.2. Nauch. trudy MTILP no.26:245-252 '62. (MIRA 17.5)

1. Kafedra avtomatiki Moskovskogo tekhnologicheskogo instituta legkoy promyshlennosti.

APPROVED FOR RELEASE: 08/23/2000 CIA-RDP86-00513R001550720020-9"

"APPROVED FOR RELEASE: 08/23/2000 CIA-RDP86-00513R001550720020-9

/60/000/01/012/019
E194/E155

AUTHORS: Sinel'nikov, D.Ye., Senior Engineer, and Rutshteyn, A.M., Head of the Laboratory

TITLE: High-torque Starting of Single-phase Squirrel-cage Motors without using Capacitors

PERIODICAL: Izvestiya vysshikh uchebnykh zavedeniy, Elektromekhanika, 1960, Nr 1, pp 99-109 (USSR)

Auxiliary equipment on single-phase locomotives may be driven by three-phase induction motors using a phase-splitter, by capacitor-start induction motors, or by induction motors started by means of ohmic resistance in the stator circuit. The first of these methods is complicated, and the second requires large capacitors; the third method is probably the best for use on locomotives. The present article describes a circuit for starting squirrel-cage induction motors from a single-phase supply by means of ohmic resistance introduced into one 'phase' of the stator winding. The correctness of the theoretical considerations was confirmed by tests on a motor. The magnetic field of a motor considered as the source of the torque may be resolved into two fields

APPROVED FOR RELEASE: 08/23/2000 CIA-RDP86-00513R001550720020-9"

"APPROVED FOR RELEASE: 08/23/2000 CIA-RDP86-00513R001550720020-9

S/144/60/000/01/012/019
E194/E155

High-torque Starting of Single-phase Squirrel-cage Motors without using Capacitors

rotating in opposite directions: then the torque may be considered as the resultant of two torques, one rotating in each direction. To increase the resultant torque the positive torque may be increased or the negative reduced. The resultant torque would be expected to be greatest when the negative torque is zero. A two-phase squirrel-cage induction motor started by means of the circuit of Fig 1a is then considered. The single-phase pulsating field is resolved into two rotating fields turning in opposite directions, and Eqs (1) and (2) are derived for the case when the negative field is zero. The formulae derived include a parameter K which is the ratio of the 'phase' voltage in the second winding to that in the first; it is positive for the circuit of Fig 1a. There is also a parameter R, which is the starting resistance in the 'phase' (1). The determination of these parameters is next considered. To simplify the procedure the two-phase motor is compared with an equivalent three-phase motor shown diagrammatically

Card 2/5

APPROVED FOR RELEASE: 08/23/2000 CIA-RDP86-00513R001550720020-9"

"APPROVED FOR RELEASE: 08/23/2000 CIA-RDP86-00513R001550720020-9

60/000/01/012/019
E194/E155

High-torque Starting of Single-phase Squirrel-cage Motors without using Capacitors

in Fig 2, and finally expressions (15) and (16) are derived for K and R respectively. The vector diagram of a two-phase motor for the condition of starting is then constructed, as in Fig 3, and the permissible starting voltage, which is limited by the permissible load current, is determined from Eq (17). The influence of harmonics of the air-gap field on the acceleration of a two-phase motor during resistance starting is then considered: Eq (23) is derived for the ratio of the maximum torque to the maximum starting torque. A worked numerical example is then given. It concerns a two-phase motor started by the resistive circuit, as shown in Fig 1. The motor was adapted from a standard three-phase induction motor type AS-81-6 by rewinding in accordance with the diagram given in Fig 5. The main characteristics of the two-phase motor are given and its circle diagram is constructed in Fig 4. Test curves of torque as a function of slip are given in Fig 6; curve 1 was taken with the motor loaded by a

APPROVED FOR RELEASE: 08/23/2000 CIA-RDP86-00513R001550720020-9"

"APPROVED FOR RELEASE: 08/23/2000 CIA-RDP86-00513R001550720020-9

S/144/60/000/01/012/019
E194/E155

High-torque Starting of Single-phase Squirrel-cage Motors without using Capacitors

generator, using the circuit of Fig 1a, and curve 2 with the two phases connected in series to a 220 V supply. For comparison the graph includes curves of torque as a function of slip taken for a symmetrical three-phase motor type AS-81-6. Of these, curve 3 relates to a symmetrical three-phase start, and curve 4 to the use of one of the phase windings as a starter winding by connecting it to the supply through a resistance. It is concluded that a motor can be started satisfactorily by the resistive circuit of Fig 1a and that by adapting a three-phase motor in the way described, very high starting torques will be obtained. The improvement in starting torque is, however, accompanied by a deterioration in the winding coefficient for the fundamental frequency of the motor field. Since the two windings are displaced by an angle other than 90 degrees, it is necessary to take such measures as reducing the stator winding pitch and slot skewing in order to reduce the influence of higher harmonic of the magnetic field on the torque curves.

Card 4/5

APPROVED FOR RELEASE: 08/23/2000 CIA-RDP86-00513R001550720020-9"

"APPROVED FOR RELEASE: 08/23/2000 CIA-RDP86-00513R001550720020-9

S/144/60/000/01/012/019
E194/E155

High-torque Starting of Single-phase Squirrel-cage Motors without using Capacitors

Tests on a specially-designed motor gave a starting torque practically as calculated, and the higher harmonics had no influence on the torque curve. There are 6 figures, no tables, no references.

ON: Vychislitel'nyy tsentra, Rostovskiy gosudarstvennyy universitet (Computing Centre, Rostov State University) (Sinel'nikov, D.Ye.)

Novocherkasskiy elektrovozostroitel'nyy nauchno-issledovatel'skiy institut (Novocherkassk Electric Locomotive Scientific Research Institute) (Rutshteyn, A.R.)

October 23, 1959

APPROVED FOR RELEASE: 08/23/2000 CIA-RDP86-00513R001550720020-9"

"APPROVED FOR RELEASE: 08/23/2000 CIA-RDP86-00513R001550720020-9

ZOLOTOV, Oleg Mikhaylovich, inzh.; SINEL'NIKOV, Dmitriy Yefimovich, inzh.

Conversion of the group summation operation of the "Ural I" computer to calculation of periodic functions. Izv. vys. ucheb. zav.; elektromekh. 5 no.7:817 '62. (MIRA 15:10)

1. Vychislitel'nyy tsentr Rostovskogo gosudarstvennogo universiteta.

(Electronic calculating machines)

APPROVED FOR RELEASE: 08/23/2000 CIA-RDP86-00513R001550720020-9"

"APPROVED FOR RELEASE: 08/23/2000 CIA-RDP86-00513R001550720020-9

SINEL'NIKOV, Dmitriy Yefimovich, inzh.

Universal program for calculating the currents of asynchronous motors with short-circuited rotors. Izv.vys.ucheb.zav.; elektromekh. 7 no. 3:305-315 '64. (MIRA 17:5)

1. Vychislitel'nyy tsentra Rostovskogo gosudarstvennogo universiteta.

APPROVED FOR RELEASE: 08/23/2000 CIA-RDP86-00513R001550720020-9"

"APPROVED FOR RELEASE: 08/23/2000 CIA-RDP86-00513R001550720020-9

DOVGANOVSKIY, N.F.; KLOCHKOV, G.D.; NIKOLAYEV, I.A.; SINEL'NIKOV, D.Ye.; YATSENKO, M.I.

Application of electronic computers in the calculation of transient and steady processes in some types of electric circuits. Trudy RIIZHT no.44:201-215 '64.

(MIRA 19:1)

APPROVED FOR RELEASE: 08/23/2000 CIA-RDP86-00513R001550720020-9"

"APPROVED FOR RELEASE: 08/23/2000 CIA-RDP86-00513R001550720020-9

ACC NR: AR6026519 SOURCE CODE: UR/0372/66/000/004/V031/V031

AUTHOR: Golyand; I. I.; Sinel'nikov, D. Ye.; Zolotov, O. M.; Rotov, Ye. G.

TITLE: Modernizing the Ural-1 digital electronic computer

SOURCE: Ref. zh. Kibernetika, Abs. 4V188

REF SOURCE: Sb. Vopr. vychisl. matem. i vychisl. tekhn. Rostov-na-Donu, Rostovsk. un-t, 1965, 123-135

TOPIC TAGS: ELECTRONIC COMPUTER, COMPUTER RELIABILITY, electronic digital computer, digital computer, computer component, computer design / Ural-1 [redacted] digital computer

ABSTRACT: A number of modifications introduced in the scheme of the Ural-1 electronic digital computer used at the computer center of Rostov-on-Don State University is described. The following operations were introduced: modulo "unity" addition; "arithmetic shift"; additional modification of unconditional transfer; improvements of the control register circuit. It is pointed out that these alterations make it possible to broaden the class of solvable problems. A number of alterations was undertaken with the object of enhancing reliability and facilitating operation: the time diagram of the counter in the magnetic drum memory address

Card 1/2 UDC: 681.142.001.3:51

APPROVED FOR RELEASE: 08/23/2000 CIA-RDP86-00513R001550720020-9"

"APPROVED FOR RELEASE: 08/23/2000 CIA-RDP86-00513R001550720020-9

ACC NR: AR6024044 SOURCE CODE: UR/0044/66/000/004/V031/V031

AUTHOR: Golyand, I. I.; Zolotov, O. M.; Rotov, Ye. G.; Sinel'nikov, D. Ye.

TITLE: The modernization of the digital computer "Ural 1" 16

SOURCE: Ref. zh. Matematika, Abs. 4V188

REF SOURCE: Sb. Vopr. vychisl. matem. i vychisl. tekhn. Rostov-na-Donu, Rostovsk. un-t, 1965, 123-135

TOPIC TAGS: computer design, computer research, computer technology, digital computer, computer circuit

ABSTRACT: The description of numerous changes introduced into the circuit of the digital computer "Ural-1", used at the computer center of the RGU, is presented. The new operations introduced are: summation over the "unit" modulus; "arithmetic shift"; additional modification of the operation of conditional control transmission; and the improvement of the circuit of the control register. It is shown that these changes allow a widening of the class of problems which may be solved. Numerous changes were introduced with the aim of increasing the reliability and simplifying the exploitation. The time diagram of the counter within the block of the address of the number NMB has been stabilized, and the blocking of the recording over the senior-junior addresses has become more reliable; changes were carried out also within the block of synchronization NML, and the false zone determination was blocked; germanium and copper oxide

UDC: 681.142.001.3:51

Card 1/2

APPROVED FOR RELEASE: 08/23/2000 CIA-RDP86-00513R001550720020-9"

"APPROVED FOR RELEASE: 08/23/2000 CIA-RDP86-00513R001550720020-9

SINELNIKOV, E. Y.

3

2637. **Fermentation process in the caecum of ruminants and herbivores.** E. Y. Sinelnikov, L. A. Semeniuk, and M. K. Rabotnova *Trud. Odessk Univ.*, 1955, 145, 249—258; *Referat. Zh. Biol.*, 1956, Abstr. No. 75736.—The influence of food rations on the intensity of the microbiological processes in the caecum of rabbits and sheep was studied. Chyme, taken through a fistula tube, was diluted with water or an equal vol. of 5% glucose and put in a saccharimeter which was placed in a thermostat at 35—38°. The quantity of gas and acid formed was determined after 24 hr. Fermentation proceeded more intensively in rabbits than in ruminants (sheep). The character of the fermentation depends on the food rations both in rabbits and sheep. Fermentation was least intensive with hay feeding, somewhat increased by grain feeding, and most intensive of all with beet feeding. The rabbits used in the experiments were segregated into two groups according to intensity of fermentation. The first group (the majority of animals) is characterised by energetic fermentation, and the second by poor fermentation. These differences depend on the composition of the microflora of the caecum. If chyme, from rabbits of the first group, is introduced by the fistular opening into rabbits with the inert type of fermentation, the intensity of the microbiological processes is raised. (Russian)

C. PRINGLE

APPROVED FOR RELEASE: 08/23/2000 CIA-RDP86-00513R001550720020-9"

"APPROVED FOR RELEASE: 08/23/2000 CIA-RDP86-00513R001550720020-9

FECHORIN, [illegible]; SIN[illegible], [illegible].

Osmotic pressure as a possible cause of the formation of cavities in wells. Burenie no.3:14-17 '65. (MIRA 18:5)

1. Trest "Pervomayburneft'" i Kuybyshevskiy politekhnicheskiy institut im. [illegible] V. Kuyby[illegible].

APPROVED FOR RELEASE: 08/23/2000 CIA-RDP86-00513R001550720020-9"

"APPROVED FOR RELEASE: 08/23/2000 CIA-RDP86-00513R001550720020-9

SINEL'NIKOV, G., general-mayor voysk svyazi v otstavke.

First field telegraph columns of the Red Army. Voen. sviaz. 16 no.2: 7-9 F '58. (MIRA 11:3)
(Military telegraph) (Russia--Revolution, 1917-1921)

APPROVED FOR RELEASE: 08/23/2000 CIA-RDP86-00513R001550720020-9"

"APPROVED FOR RELEASE: 08/23/2000 CIA-RDP86-00513R001550720020-9

STRUYEV, V.; SINEL'NIKOV, G.

Cast stone. Znan.-sila no.2:29-30 F '55. (MIRA 8:3)
(Stone, Cast)

APPROVED FOR RELEASE: 08/23/2000 CIA-RDP86-00513R001550720020-9"

"APPROVED FOR RELEASE: 08/23/2000 CIA-RDP86-00513R001550720020-9

PISHCHIKOV, V.; SINEL'NIKOV, G.

New cameras. Sov.foto 21 no.9:31 S '61. (MIRA 14:9)
(Cameras)

APPROVED FOR RELEASE: 08/23/2000 CIA-RDP86-00513R001550720020-9"

"APPROVED FOR RELEASE: 08/23/2000 CIA-RDP86-00513R001550720020-9

SINEL'NIKOV, G.

In reliable hands. Okhr. truda i sots. strakh. 6 no.11:15 N '63. (MIRA 16:11)

1. Vneshtatnyy tekhnicheskiy inspektor Krasnodarskogo promyshlennogo krayevogo soveta professional'nykh soyuzov.

APPROVED FOR RELEASE: 08/23/2000 CIA-RDP86-00513R001550720020-9"

"APPROVED FOR RELEASE: 08/23/2000 CIA-RDP86-00513R001550720020-9

APPROVED FOR RELEASE: 08/23/2000 CIA-RDP86-00513R001550720020-9"

"APPROVED FOR RELEASE: 08/23/2000 CIA-RDP86-00513R001550720020-9

VINIOLI, Ivan Ivanovich; RAPOPORT, S.I., inzh., retsenzent; LIPOVETSKIY, I.A., inzh., retsenzent [deceased]; MOROZOV, I.M., inzh., retsenzent; SINEL'NIKOV, G.V., inzh., retsenzent; GARBUZOV, N.A., inzh., reysenzent; KOSHMAN, Ye.G., inzh., retsenzent; GURVITS, A.I., inzh., red.; GOLYATKINA, A.G., red. izd-va; ATTOPOVICH, M.K., tekhn. red.

[Mechanical and conveyor equipment of steel smelting plants] Mekhanicheskoe i transportnoe oborudovanie staleplavil'nykh tsekhov. Moskva, Gos. nauchno-tekhn. izd-vo lit-ry po chernoi i tsvetnoi metallurgii, 1961. 432 p. (MIRA 14:10)
(Open-hearth furnaces—Equipment and supplies)
(Materials handling)

APPROVED FOR RELEASE: 08/23/2000 CIA-RDP86-00513R001550720020-9"

"APPROVED FOR RELEASE: 08/23/2000 CIA-RDP86-00513R001550720020-9

PROCESSES AND PROPERTIES INDEX

16

CA

Utilization of wastes from the starch-sirup industry in the manufacture of alcohol. I. Sinel'nikov. *Spirtodochnaya Prom.* 14, No. 7, 12-13(1937); *Chem. Zentr.* 1938, I, 1016.—Investigations are reported on the fermentation of the potato residues which amount to 5-32% of the raw material and contain predominantly starch. The compn. of the residue is: raw fiber 15.7, nitrogenous matter 4.5, fat 0.4 and starch 50.0%. W. A. Moore

ASM-SLA METALLURGICAL LITERATURE CLASSIFICATION

APPROVED FOR RELEASE: 08/23/2000 CIA-RDP86-00513R001550720020-9"

"APPROVED FOR RELEASE: 08/23/2000 CIA-RDP86-00513R001550720020-9

SINEL'NIKOV, I.D.

Raise the production of sago starch. Sakh.prom. no.4:63-66 Ap '60. (MIRA 13:8)

(Starch)

APPROVED FOR RELEASE: 08/23/2000 CIA-RDP86-00513R001550720020-9"