"APPROVED FOR RELEASE: 08/26/2000 CIA-RDP86-00513R001653520012-6

SOV/137-58-10-21808

Translation from: Referativnyy zhurnal, Metallurgiya, 1958, Nr 10, p 193 (USSR)

AUTHORS: Strel'tsova, Ye. M., Petrashen', V. I.

TITLE: Complex of Monovalent Copper With a Thiocyanate (Kompleks odnovalentnoy medi s rodanidom)

PERIODICAL: Tr. Novocherk. politekhn. in-ta, 1958, Vol 69/83, pp 155-161

ABSTRACT: The determination of the composition of the monovalent Cu thiocyanate complex was carried out. The coordination number n was found to be equal to 4. One-half the volume of 1-M Na_2SO_3 solution is added to 1-M $CuSO_4$ solution, the solution is heated to boiling and precipitated with a calculated amount of 1-M solution of NH_4SCN. The precipitate is filtered off, washed, and dissolved in NH_4SCN (0.5 - 6.0 M). After 20 hours the NH_4SCN in the aliquot part of the solution is decomposed by boiling with H_2SO_4 and HNO_3. After the solution is cooled and neutralized with NH_4OH the Cu in it is determined by the carbamate or the NH_4OH method. The constant of the instability of the monovalent Cu thiocyanate complex is determined by the method of solubility and the potentiometric method: $K_{inst} \approx 2 \cdot 10^{-11}$.

Card 1/1 1. Copper thiocyanates--Analysis 2. Copper--Determination 3. Thiocyanates--Determination P. K.

APPROVED FOR RELEASE: 08/26/2000 CIA-RDP86-00513R001653520012-6"

"APPROVED FOR RELEASE: 08/26/2000 CIA-RDP86-00513R001653520012-6

STREL'TSOVA, Ye.M.; PETRASHEN', V.I.

Study of the oxidation kinetics of hydroquinone with hydrogen peroxide in the presence of copper and pyridine ions. Izv.vys. ucheb.zav.; khim.i khim.tekh. 7 no.6:919-923 '64. (MIRA 18:5)

1. Ivanovskiy khimiko-tekhnologicheskiy institut, kafedra neorganicheskoy khimii.

APPROVED FOR RELEASE: 08/26/2000 CIA-RDP86-00513R001653520012-6"

"APPROVED FOR RELEASE: 08/26/2000 CIA-RDP86-00513R001653520012-6

STREL'TSOVA, Ye.M.; PETRASHEN', V.I.

Study of copper-pyridine complexes by the kinetic method. Izv. vys. ucheb. zav.; khim. i khim. tekh. 8 no.3:373-377 '65. (MIRA 18:10)

1. Ivanovskiy khimiko-tekhnologicheskiy institut, kafedra neorganicheskoy khimii.

APPROVED FOR RELEASE: 08/26/2000 CIA-RDP86-00513R001653520012-6"

"APPROVED FOR RELEASE: 08/26/2000 CIA-RDP86-00513R001653520012-6

STREL'TSOVA, Ye.M.; PETRASHEN', V.I.

Oxidation of hydroquinone. Zhur. anal. khim. 20 no. 11:1169-1173 '65 (MIRA 19:1)

1. Ivanovskiy khimiko-tekhnologicheskiy institut. Submitted July 6, 1964.

APPROVED FOR RELEASE: 08/26/2000 CIA-RDP86-00513R001653520012-6"

"APPROVED FOR RELEASE: 08/26/2000 CIA-RDP86-00513R001653520012-6

STREL'TSOVA, Ye.N.

Bibliography in the service of industrial production. Za tekh.prog. 3 no.10:44 O '63. (MIRA 16:12)

1. Azerbaydzhanskaya respublikanskaya nauchno-tekhnicheskaya biblioteka.

APPROVED FOR RELEASE: 08/26/2000 CIA-RDP86-00513R001653520012-6"

"APPROVED FOR RELEASE: 08/26/2000 CIA-RDP86-00513R001653520012-6

KORKINA, M.V.; NARODITSKAYA, V.F.; STEL'TSOVA, Z.G.

Results of a clinical study of meprotan. Zhur.nevr. i psikh. 61 no.6:886-889 '61. (MIRA 15:2)

1. Kafedra psikhiatrii (zav. - prof. O.V.Kerbikov) II Moskovskogo meditsinskogo instituta imeni Pirogova i Psikhonevrologicheskaya bol'nitsa No.8 imeni Solov'yeva (glavnyy vrach V.D.Denisov).
(PROPANEDIOL) (MENTAL ILLNESS)

APPROVED FOR RELEASE: 08/26/2000 CIA-RDP86-00513R001653520012-6"

"APPROVED FOR RELEASE: 08/26/2000 CIA-RDP86-00513R001653520012-6

STREL'TSYN, G. S.

Dissertation: "The Principle of Flotability and Fixation of Hydrophobic Particles in the Boundary Between Water and Air." Cand Tech Sci, Leningrad Inst of Mining, Leningrad 1953.

W-30928

SO: Referativnyy Zhurnal, No. 5, Dec 1953, Moscow, AN USSR ([redacted])

APPROVED FOR RELEASE: 08/26/2000 CIA-RDP86-00513R001653520012-6"

"APPROVED FOR RELEASE: 08/26/2000 CIA-RDP86-00513R001653520012-6

GROSSMAN, L.I.; YEROPKIN, Yu.I.; STREL'TSYN, G.S.

Use of a cyano-salt to separate bulk sulfide products of flotation.
TSvet.met. 27 no.5:16-21 S-O '54. (MIRA 10:10)

1. Institut Mekhanobr.
(Flotation) (Potassium ferricyanide)

APPROVED FOR RELEASE: 08/26/2000 CIA-RDP86-00513R001653520012-6"

"APPROVED FOR RELEASE: 08/26/2000 CIA-RDP86-00513R001653520012-6

SOV/137-58-7-14039

Translation from: Referativnyy zhurnal, Metallurgiya, 1958, Nr 7, p 6 (USSR)

AUTHORS: Strel'tsyn, G. S., Vymenets, V. I., Isayeva, F. S.

TITLE: Concentration of Copper-zinc Ores Containing Secondary Copper Minerals (Obogashcheniye medno-tsinkovykh rud, soderzhashchikh vtorichnyye mednyye mineraly)

PERIODICAL: V sb.: Obogashcheniye rud tsvetnykh metallov. Moscow, Metallurgizdat, 1956, pp 36-50

ABSTRACT: 4 samples of Cu-Zn ore with Zn-Cu ratios ranging from 0.7:1 to 2.8:1 were tested. They contained 34.8 to 81.4% oxided and secondary sulfide Cu. In the 1st sample, containing ~35% oxidized and secondary sulfide Cu, favorable results were obtained with the following procedure: bulk flotation desorption of reactants by Na_2S and subsequent depression of the ZnS by K cyanide. The 2nd sample contained 65.4% oxidized and secondary sulfide Cu, and, thanks to the low Zn-Cu ratio (0.7:1) was concentratable with comparative ease by the usual systems of concentration. Significant difficulties were encountered in the concentration of the third sample. Oxidized and secondary sulfide Cu came to 68.8% of the

Card 1/2

APPROVED FOR RELEASE: 08/26/2000 CIA-RDP86-00513R001653520012-6"

"APPROVED FOR RELEASE: 08/26/2000 CIA-RDP86-00513R001653520012-6

SOV/137-58-7-14032

Concentration of Copper-zinc Ores (cont.)

whole. The Zn-Cu ratio was 2.6:1. The main Cu mineral in this specimen was chalcocite, while covellite and chalcopyrite were also encountered. The most favorable results in the separation of Cu minerals and ZnS from the bulk concentrate were obtained by the use of K ferricyanide. On concentration of the 4th sample, containing 81.4% oxidized and secondary sulfide Cu, chiefly in the form of covellite, ferricyanide salt and other methods did not yield favorable results in concentration. Studies by L. I. Grosman, and also by Yu. I. Yeroykin and V. A. Borodina testify that the use of ferricyanide salt to separate the Cu-Zn product, when the secondary Cu minerals are chalcocite and bornite, offers promise.

K. A.

1. Copper zinc ores--Processing 2. Copper zinc ores--Flotation

Card 2/2

APPROVED FOR RELEASE: 08/26/2000 CIA-RDP86-00513R001653520012-6"

"APPROVED FOR RELEASE: 08/26/2000 CIA-RDP86-00513R001653520012-6

STREL'TSYN, G. S.

"The special features of flotation of perovskite ores at the Afrikanda Beneficiation Works"

Report presented at the 6th Scientific and Technical Session of the Mekhanobr Inst. Leningrad, 15-19 May 1958

APPROVED FOR RELEASE: 08/26/2000 CIA-RDP86-00513R001653520012-6"

"APPROVED FOR RELEASE: 08/26/2000 CIA-RDP86-00513R001653520012-6

BELASH, F.N.; GONTARENKO, P.A.; LOZOVAYA, L.V.; STREL'TSYN, G.S.; DOLZHENKOVA, A.N.

V.I.Klassen's and Mao Chi-fan's article "Mechanism of the effect of water glass in the flotation of nonsulfide minerals." F.N.Belash and others. TSvet.met. 33 no.5:74-75 My '60. (MIRA 13:7)

(Flotation) (Klassen, V.I.)
(Mao Chi-fan') (Belash, F.N.)

APPROVED FOR RELEASE: 08/26/2000 CIA-RDP86-00513R001653520012-6"

"APPROVED FOR RELEASE: 08/26/2000 CIA-RDP86-00513R001653520012-6

DOLZHENKOVA, A. N.; STREL'TSYN, G. S.

Using the electrokinetic method in studying the regularities of the flotation process. Trudy Mekhanobr no. 131:7-23 '62.

Changes in the ζ-potential of quartz in the presence of modifying agents and a cation collector. Ibid.:24-42. (MIRA 17:5)

APPROVED FOR RELEASE: 08/26/2000 CIA-RDP86-00513R001653520012-6"

"APPROVED FOR RELEASE: 08/26/2000 CIA-RDP86-00513R001653520012-6

SOV/112-58-2-1869

Translation from: Referativnyy zhurnal, Elektrotekhnika, 1958, Nr 2, pp 11-12 (USSR)

AUTHOR: Odelevskiy, V. I., and Strel'tsyna, R. N.

TITLE: Synthesis of Silicoberyllates of Alkaline Metals and Barium Alumosilicate and Investigation of Their Electric Properties at High Temperatures (Sintez silikoberillatov shchelochnykh metallov i alyumosilikata bariya i issledovanye ikh elektricheskikh svoystv pri vysokikh temperaturakh)

PERIODICAL: Inv. Tomskogo politekhn. in-ta, 1956, Vol 91, pp 323-334

ABSTRACT: The aim of the investigations was to develop dielectrics capable of withstanding DC voltage as well as H-F field at temperatures of 500° to 1,000°C. New compounds were created: silicoberyllates of calcium, strontium, and barium, corresponding to an equimolecular composition of $RO \cdot BeO \cdot SiO_2$. Interplanar spacings and corresponding intensities of x-ray reflections were determined for the above new compositions. Also reported are refraction indices, densities, and temperature expansion factors of the new compositions. At

Card 1/2

APPROVED FOR RELEASE: 08/26/2000 CIA-RDP86-00513R001653520012-6"

"APPROVED FOR RELEASE: 08/26/2000 CIA-RDP86-00513R001653520012-6

SOV/112-58-2-1869

Synthesis of Silicoberyllates of Alkaline Metals and Barium Alumosilicate and . . . .

800° C, silicoberyllates have 1/100 the electric conductivity and 1/10 the dielectric loss of fused quartz. Conditions were discovered for obtaining a monoclinic modification of barium alumosilicate. At about 1,400° C, the monoclinic celsian has a thermodynamic equilibrium. Dielectric losses of barium alumosilicate prepared from commercial oxides are 0.03-0.04 at 1 mc and 800° C, and are 0.0005-0.001 at 500° C; its resistivity is 10^8 ohm·cm at 800° C. Barium alumosilicate has much higher dielectric properties at high temperatures than fused quartz. With their good electric properties, silicoberyllates have certain disadvantages compared to barium alumosilicate: a higher temperature expansion factor and expensive beryllium oxide in their composition. The author suggests that barium alumosilicate be used for internal electron-tube insulators. Bibliography: 11 items.

M.D.M.

Card 2/2

APPROVED FOR RELEASE: 08/26/2000 CIA-RDP86-00513R001653520012-6"

"APPROVED FOR RELEASE: 08/26/2000 CIA-RDP86-00513R001653520012-6

VISHNEVSKIY, Ye.N.; STREL'TSYN, V.G.

Crushing and grinding of stanniferous ores before gravity concentration. Obog. rud 9 no.4:11-17 '64. (MIRA 18:5)

APPROVED FOR RELEASE: 08/26/2000 CIA-RDP86-00513R001653520012-6"

"APPROVED FOR RELEASE: 08/26/2000 CIA-RDP86-00513R001653520012-6

L 42877-66 EWP(e)/EWT(m)/EWP(t)/ETI IJP(c) JD/WW/JG SOURCE CODE: UR/0073/66/011/004/0720/0725

ACC NR: AP6022890

AUTHOR: Mal'tseva, N. N.; Strelyadkina, E. K.; Mikheyeva, V. I.

ORG: Laboratory of Peroxy Compounds, Institute of General and Inorganic Chemistry im. N. S. Kurnakov, Academy of Sciences, SSSR (Laboratoriya perekisnykh soyedineniy, Institut obshchey i neorganicheskoy khimii Akademii nauk SSSR)

TITLE: Reaction of sodium borohydride with nickel chloride in aqueous solutions

SOURCE: Zhurnal neorganicheskoy khimii, v. 11, no.4, 1966, 720-725

TOPIC TAGS: nickel compound, borohydride, sodium compound, chemical precipitation, hydrolysis

ABSTRACT: In studying the reaction of $NaBH_4$ with nickel salts, use was made of a method in which the ratio of the initial reactants was varied, and the solid, liquid, and gaseous phases formed were fully analyzed chemically. A study of the dependence of the hydrogen evolved on the ratio of the initial components showed that there is no quantitative liberation of hydrogen. When small amounts of nickel chloride are added, the amount of hydrogen evolved approaches the theoretical amount, then decreases with increasing $NiCl_2$ content, and reaches a constant value (75% of theoretical yield) when $NiCl_2:NaBH_4 = 0.5$. The amount of precipitate formed remains constant up to this value, then smoothly decreases as this ratio increases. The amount of precipitate formed in accordance with the overall equation

UDC: 546.273'33'11

Card 1/2

APPROVED FOR RELEASE: 08/26/2000 CIA-RDP86-00513R001653520012-6"

"APPROVED FOR RELEASE: 08/26/2000 CIA-RDP86-00513R001653520012-6

DANCHEV, V.I.; KORNILOV, A.M.; NEYMYSHEV, M.V.; OL'KHA, V.V.; PROSHLYAKOV, B.K.; STRELYANOV, N.P.; SYTNIKOV, M.P.

Uranium mineralization in carbonate sedimentary rocks. Geol.rud.mestorozh. no.6:27-38 N-D '59. (MIRA 13:7)
(Uranium ores)

APPROVED FOR RELEASE: 08/26/2000 CIA-RDP86-00513R001653520012-6"

"APPROVED FOR RELEASE: 08/26/2000 CIA-RDP86-00513R001653520012-6

STRELYANOV, N.P.

Method of determining the porosity and structure of porous space in coherent rocks. Geol.rud.mestorozh. no.5:96-98 S-O '62. (MIRA 15:12)

(Porosity)

APPROVED FOR RELEASE: 08/26/2000 CIA-RDP86-00513R001653520012-6"

"APPROVED FOR RELEASE: 08/26/2000 CIA-RDP86-00513R001653520012-6

STRELYAU, Yan [Strelau, Jan]

Temperature as unconditioned stimulus in the study of galvanic skin reactions caused by conditioned reflexes. Vop.psikhol. 9 no.2:158-160 Mr-Ap '63. (MIRA 16:4)
(Electricity—Physiological effect)
(Conditioned response)

APPROVED FOR RELEASE: 08/26/2000 CIA-RDP86-00513R001653520012-6"

"APPROVED FOR RELEASE: 08/26/2000 CIA-RDP86-00513R001653520012-6

L 05651-67 EWT(m)/EWP(w) IJP(c) EM/WW

ACC NR: AT6025576 (N) SOURCE CODE: UR/2752/66/000/072/0098/0112

45
B+1

AUTHOR: Strelyayev, L. N.

ORG: None

TITLE: Conditions for generation of intense rolling of a ship on relatively short waves

SOURCE: Leningrad. Tsentral'nyy nauchno-issledovatel'skiy institut morskogo flota. Trudy, no. 72, 1966. Gidromekhanika sudna (Hydromechanics of ships), 98-112

TOPIC TAGS: ship, motion mechanics, marine engineering, oscillation, parametric resonance

ABSTRACT: The author considers the interaction of various forms of oscillatory motion of a ship resulting in rotary oscillations of considerable amplitude. This phenomenon is called parametric resonance. Formulas are derived for determining the conditions of parametric resonance resulting in rolling of a ship situated broadside to regular waves. These expressions account for the effect which the position of the center of gravity of the ship has on the threshold of excitation of parametric resonance. Experimental data are given from studies of parametric resonance on models in a tank. The results indicate that intense rolling under parametric resonance conditions may take place even on ships with a large draft, e. g. loaded maritime cargo

UDC: 629.12:532.5.041

Card 1/2

APPROVED FOR RELEASE: 08/26/2000 CIA-RDP86-00513R001653520012-6"

"APPROVED FOR RELEASE: 08/26/2000 CIA-RDP86-00513R001653520012-6

L 05651-67

ACC NR: AT6025576

vessels. The amplitude of rolling under these conditions may reach 20-30°, and amplitude-frequency curves for a specific cargo vessel show that rolling may reach an amplitude where the deck is flooded. A characteristic feature of rolling under parametric resonance conditions is the fact that this type of oscillatory motion takes place at a wave frequency which is approximately 3 times the frequency at which rolling takes place under fundamental resonance conditions, i. e. rolling of considerable amplitude develops on relatively short waves. The results of the study indicate that parametric resonance conditions must be taken into account in calculating rolling of vessels where conditions for this phenomenon are satisfied. Orig. art. has: 4 figures, 34 formulas.

SUB CODE: 13/ SUBM DATE: None/ ORIG REF: 008/ OTH REF: 003

Card 2/2

APPROVED FOR RELEASE: 08/26/2000 CIA-RDP86-00513R001653520012-6"

"APPROVED FOR RELEASE: 08/26/2000 CIA-RDP86-00513R001653520012-6

STRELYAYEV, M.I., inzh. (Kuybyshev); FAN'KO, Yu.A., inzh. (Kuybyshev)

Simple and efficacious method for strengthening reinforced concrete girders. Stroi.pred.neft.prom. 2 no.9:21-22 S '57. (MIRA 12:5)

(Girders) (Reinforced concrete construction)

APPROVED FOR RELEASE: 08/26/2000 CIA-RDP86-00513R001653520012-6"

"APPROVED FOR RELEASE: 08/26/2000 CIA-RDP86-00513R001653520012-6

SOV/124-58-1-1168

Translation from: Referativnyy zhurnal, Mekhanika, 1958, Nr 1, p 149 (USSR)

AUTHOR: Strelyayev, M. I.

TITLE: On the Determination of the Bending Parameters of an Infinitely Long Pipe Suspended at One Point (K voprosu ob opredelenii parametrov izgiba beskonechno-dlinnoy truby, podveshennoy v tochke)

PERIODICAL: Tr. Kuybyshevsk. inzh.-stroit. in-ta, 1957, Nr 4, pp 111-123

ABSTRACT: Examination of the problem of the deformations of an infinitely long pipe (or strip) lying on a rigid foundation and subjected to lifting by a vertical force concentrated at some point. A similar problem arises during the laying of long pipe-line segments. In his solution the author starts from the incorrect assumption that the force applied at the suspension point equals the full weight of the lifted off pipe segment. Actually the dangling ends of the pipe segment still transmit part of the weight to the ground in the form of concentrated forces acting at the points of contact therewith. In a particular case, for example when the pipe lies on a plane, the suspension lifting force amounts to two-thirds of the weight of the lifted-off pipe segment. Hence, the expression under the root in formula (7) of the paper must be three

Card 1/2

APPROVED FOR RELEASE: 08/26/2000 CIA-RDP86-00513R001653520012-6"

"APPROVED FOR RELEASE: 08/26/2000 CIA-RDP86-00513R001653520012-6

SOV/124-58-1-1168

On the Determination of the Bending Parameters of an Infinitely Long Pipe (cont.)

times as large as that found by the author.

S. V. Boyarshinov

Card 2/2

APPROVED FOR RELEASE: 08/26/2000 CIA-RDP86-00513R001653520012-6"

"APPROVED FOR RELEASE: 08/26/2000 CIA-RDP86-00513R001653520012-6

STRELYAYEV, M.I., inzh.

Studying stability of reinforced concrete beams subjected to frequently repeated loads. Bet. i zhel.-bet. no.9:351-353 S '58. (MIRA 11:10)

(Girders--Testing)

APPROVED FOR RELEASE: 08/26/2000 CIA-RDP86-00513R001653520012-6"

"APPROVED FOR RELEASE: 08/26/2000 CIA-RDP86-00513R001653520012-6

KUCHINA, F.M.; MATROSOVA, T.V.; BORGEST, V.A.; ZAYDEL', A.N.; PEGROV, A.A.; STRELYAYEV, M.I.; GEMINOV, V.N.

Brief reports. Zav. lab. 24 no.8:958, 1034-1035 '58. (MIRA 11:8)

1.Kuznetskiy metallurgicheskiy kombinat (for Kuchina). 2. Leningradskiy gosudarstvennyy universitet (for Borgest, Zaydel', Pegrov). 3.Kuybyshevskiy inzhenerno-stroitel'nyy institut (for Strelyayev).
(Chemistry, Analytical) (Metals--Testing)
(Reinforced concrete--Testing)

APPROVED FOR RELEASE: 08/26/2000 CIA-RDP86-00513R001653520012-6"

"APPROVED FOR RELEASE: 08/26/2000 CIA-RDP86-00513R001653520012-6

CHELNAYEV, M. T.: Master Tech Sci (diss) -- "The strength of reinforced-concrete beams under cyclic loading". Kuybyshev, 1959. 15 pp (Min Higher Educ USSR, Kuybyshev Industrial Inst im V. V. Kuybyshev), 150 copies (KL, No 14, 1959, 121)

APPROVED FOR RELEASE: 08/26/2000 CIA-RDP86-00513R001653520012-6"

"APPROVED FOR RELEASE: 08/26/2000 CIA-RDP86-00513R001653520012-6

STRELYUCHENKO, I. F.

Milk

Effect of giving calves milk rich in butterfat on their own butterfat production. Agrobiologiia, No. 4, 1952.

Monthly List of Russian Accessions, Library of Congress, November 1952. Unclassified.

APPROVED FOR RELEASE: 08/26/2000 CIA-RDP86-00513R001653520012-6"

"APPROVED FOR RELEASE: 08/26/2000 CIA-RDP86-00513R001653520012-6

STRELYCHENKO, I. F.

Dairy Cattle

Controlled breeding of cattle for butter fat production. Sots. zhiv. 14 no. 7, 1952.

9. Monthly List of Russian Accessions, Library of Congress, December 1953, Uncl.
52

APPROVED FOR RELEASE: 08/26/2000 CIA-RDP86-00513R001653520012-6"

"APPROVED FOR RELEASE: 08/26/2000 CIA-RDP86-00513R001653520012-6

USSR / Farm Animals. Q-2

Abs Jour : Ref Zhur - Biol., No 10, 1958, No 45162

author : Strelyuchenko, I.F.
Inst : Not given
Title : Methods for Increase of the Milk Production in Cattle.

Orig Pub : S. kh. Bashkirii, 1957, No. 6, 22-27

Abstract : No abstract.

C rd 1/1

APPROVED FOR RELEASE: 08/26/2000 CIA-RDP86-00513R001653520012-6"

"APPROVED FOR RELEASE: 08/26/2000 CIA-RDP86-00513R001653520012-6

STRELYUKHINA, N. V.

Origin of febrile reactions in leukoses. Probl. gemat. i perel. krovi no.10:14-19 '61. (MIRA 14:12)

1. Iz kafedry propedevtiki terapii (zav. - prof. I. V. Zherdin) Stalingradskogo meditsinskogo instituta i 3-y kafedry terapii (zav. - chlen-korrespondent AMN SSSR prof. I. A. Kassirskiy) TSentral'nogo instituta usovershenstvovaniya vrachey.

(LEUCOSIS)

APPROVED FOR RELEASE: 08/26/2000 CIA-RDP86-00513R001653520012-6"

"APPROVED FOR RELEASE: 08/26/2000 CIA-RDP86-00513R001653520012-6

S/122/61/000/005/012/013
D221/D304

AUTHOR: Strelyayev, V.S., Engineer

TITLE: Conference on machines and methods for mechanical testing of plastics

PERIODICAL: Vestnik mashinostroyeniya, no. 5, 1961, 86

TEXT: The scientific and technical conference on machines and methods for testing plastics took place in Moscow during February 23-24, 1961. It was convened by the Committee on Strength of the Central Office of HTO MAШП РОМ (NTO MAShPROM), the Institute of Engineering of the Academy of Sciences USSR, the Scientific and Research Institute of Testing Machines, Instruments and Measuring Devices of Masses. 200 Specialists, representing institutes, industrial laboratories and factories took part in the discussions. Papers as well as communications were read on methodical problems concerning short tests of glass reinforced plastics at normal and low temperatures (P.F. Koshelev, Engineer, Ye.I. Stepanychev, Engineer). Short and long duration examination of similar materials at normal and

Card 1/3

APPROVED FOR RELEASE: 08/26/2000 CIA-RDP86-00513R001653520012-6"

"APPROVED FOR RELEASE: 08/26/2000 CIA-RDP86-00513R001653520012-6

S/122/61/000/005/012/013
D221/D304

Conference on machines and ...

high temperatures, in connection with absolute sizes and irregularity of stresses were submitted in a paper by S.V. Serensen, Academician AS USSR and V.S. Strelyayev, Engineer. Peculiarities in testing plastics and determining their elastic constants due to anisotropy were discussed by A.L. Rabinovich, Candidate of Technical Sciences; creep was discussed by A.M. Nikol'skiy, Engineer; testing with cyclic loads, by S.B. Ratner, Candidate of Physical and Mathematical Sciences, A.V. Stinksas, Engineer, Yu.G. Gil'gendori, Engineer, Ye.K. Ashkenazi, Candidate of Technical Sciences, M.Ya. Gal'perin, Engineer, V.A. Popov, Engineer; the study of the damping properties of plastics and determination of vibratory moduli of elasticity were examined by A.G. Fedorenko, V.M. Chernyshev, Engineers; apparatus and methods of investigating properties of glass reinforced plastics in the case of shock stretching by Yu. Ya. Voloshenko-Klimovitskiy, Candidate of Technical Sciences; determination of hardness of plastics by A.D. Kuritsyna, Candidate of Technical Sciences, P.G. Meynster, Engineer. The main and principal arrangements of designed machines and instruments for testing plastics were exposed by L.M. Lebedev, Engineer. The project

Card 2/3

APPROVED FOR RELEASE: 08/26/2000 CIA-RDP86-00513R001653520012-6"

"APPROVED FOR RELEASE: 08/26/2000 CIA-RDP86-00513R001653520012-6

S/032/61/027/008/020/020
B124/B215

AUTHOR: Strelyayev, V. S.

TITLE: Conference on machines and methods for mechanical testing of plastics

PERIODICAL: Zavodskaya laboratoriya, v. 27, no. 8, 1961, 1047-1048

TEXT: On February 23 and 24, 1961 a conference was held in Moscow, which was dedicated to methods of mechanical testing of plastics, and to the most important technological demands made on such test machines and devices. Approximately 200 specialists from institutes of the Academy and special institutes, schools of higher and technical education, industrial laboratories and works of various cities of the Soviet Union participated in the conference. After the opening speech of Academician of the UkrSSR, S. V. Serensen, President of the Komitet prochnosti Tsentral'nogo pravleniya NTO Mashprom (Committee on Strength of the Central Administration of the Scientific and Technological Department of the Machine Building Industry), P. F. Koshelev and Ye. I. Stepanychev ((Institut mashinovedeniya AN SSSR - IMASh AN SSSR)(Institute of Sciences of Machines, AS USSR)) reported on

Card 1/4

APPROVED FOR RELEASE: 08/26/2000 CIA-RDP86-00513R001653520012-6"

"APPROVED FOR RELEASE: 08/26/2000 CIA-RDP86-00513R001653520012-6

S/032/61/027/008/020/020
B124/B215

Conference on machines...

"Static tests of reinforced plastics", S. V. Serensen and V. S. Hrelyayev (IMASh AN SSSR) on "Static tests of glass-reinforced plastics at normal and elevated temperatures", Yu. Ya. Voloshenko-Klimovitskiy (IMASh AN SSSR) on "Methods and apparatus for examining the mechanical properties of glass-reinforced plastics under impact loading", A. D. Kuritsyna and G. P. Meynster (IMASh AN SSSR) on the determination of the hardness of plastics at normal and elevated temperatures, S. B. Ratner, A. V. Stinskas and Yu. G. Gil'gendorf (GosNII Plastmass) on "Fatigue tests of plastics", M. Ya. Gal'perin (IMASh AN SSSR) on "Application of MUK-100 (MUK-100) and MUP-150 (MUP-150) machines for fatigue tests of plastics subjected to flat bending", V. A. Popov on "Study of the strength of large-size plastic samples on bending with changing sign", Ye. K. Ashkenazi (Leningradskaya lesotekhnicheskaya akademiya (Leningrad Forest Engineering Academy)) on the anisotropy of plastics, and characteristics of their fatigue tests, A. L. Rabinovich (Laboratoriya anizotropnykh struktur AN SSSR (Laboratory for Anisotropic Structures, AS USSR)) on tests of plastics in connection with anisotropy and high-elasticity deformation, A. G. Fedorenko (VIAM) on "Methods of determining the dynamic elastic modulus and the decrement of damping of plastics", V. M. Chernyshev (IMASh AN SSSR) on methods using free

Card 2/4

APPROVED FOR RELEASE: 08/26/2000 CIA-RDP86-00513R001653520012-6"

"APPROVED FOR RELEASE: 08/26/2000 CIA-RDP86-00513R001653520012-6

S/032/61/027/008/020/020
B124/B215

Conference on machines...

oscillations under various conditions of suspension of the sample, on impulse, ultrasonic, and resonant frequency methods of testing elastic damping properties of plastics, A. M. Nikol'skoy (VIAM) on the creep of plastics, L. M. Lebedev (Nauchno-issledovatel'skiy i konstruktorskiy institut ispytatel'nykh mashin, priborov i sredstv izmereniya mass (Scientific Research and Design Institute of Testing Machines and Devices and Means of Measuring Masses)) on the "Work of the NIKIMP for the development of machines and devices for testing plastics", A. Ye. Omel'yanov (NIKIMP) on "Planned series and standardization of machines and devices for polymers", F. S. Sivanov (zavod im. Uritskogo, Engel's (plant ... Uritskiy Engel's)), K. T. ...nernobrovtsev (Gor... Gor'kiy Automobile Plant)), S. F. Glazov and I. A. Monakhov (VIAM) on individual problems. In his final speech, S. V. Serensen, Academic ... the UkrSSR, summarized the main conditions of testing the structural strength of plastics. He stressed the necessity of developing new types of test machines and conducting further investigations in the field of testing devices. It was pointed out that the output of plastics and the level of ... techniques are in no relation to each other, since the machines and devices available do not meet the demands of modern testing techniques, nor are there any

Card 3/4

APPROVED FOR RELEASE: 08/26/2000 CIA-RDP86-00513R001653520012-6"

"APPROVED FOR RELEASE: 08/26/2000 CIA-RDP86-00513R001653520012-6

Conference on machines...

[illegible]

standardized methods for important tests. The [illegible] proposed as a basis for new methods of testing plastics [illegible] the resolution of the conference. Thus, the coordination of scientific and technological work is to be improved, the scientific and technological basis of the Institute NIKIMP and of those of the Goskomitet [illegible] (State Committee on Chemistry) is to be extended, and [illegible] standards are to be set up for testing plastics. The delegates also decided to ask the Prezidium AN SSSR (Presidium of the AS USSR) to organize a center of scientific studies on polymer mechanics at the Institut Mekhaniki AN SSSR (Institute of Mechanics, AS USSR).

ASSOCIATION: Institut mashinovedeniya Akademii nauk SSSR (Institute of Sciences of Machines of the Academy of Sciences USSR)

Card 4/4

APPROVED FOR RELEASE: 08/26/2000 CIA-RDP86-00513R001653520012-6"

"APPROVED FOR RELEASE: 08/26/2000 CIA-RDP86-00513R001653520012-6

STRELYAYEV, V.S., inzh.

Conference on machines and methods for mechanical testing of plastics. Vest. mash. 41 no. 5:86 My '61. (MIRA 14:5)
(Plastics—Testing)

APPROVED FOR RELEASE: 08/26/2000 CIA-RDP86-00513R001653520012-6"

"APPROVED FOR RELEASE: 08/26/2000 CIA-RDP86-00513R001653520012-6

31651
S/536/61/000/051/006/006
D040/D112

16 7000

AUTHORS: Ivanov, G.T., Strelyayev, V.S.

TITLE: Investigation of the mechanical properties of aluminum alloys under compression

SOURCE: Moscow. Aviatsionnyy tekhnologicheskiy institut. Trudy, no.51, 1961, 90-99. Issledovaniya ustalosti i dlitel'noy prochnosti alyuminiyevykh splavov.

TEXT: The authors describe an investigation into the mechanical properties of B95 (V95), Д16 (D16) and AK4-1 (AK4-1) aluminum alloys in a hardened and aged state, subjected to compression and tension; the purpose of the tests was to obtain a curve $\delta = f(\varepsilon)$ covering a wider range, with ε values of up to 10÷15%, as normally such tests are made only up to $\varepsilon = 1\%$. The composition of the above alloys is as follows:

	Cu	Mg	Mn	Fe	Si	Ti	Zn	Cr	Zr	Ni
V95	1.75	2.45	0.32	0.34	0.22	-	6.49	0.18	0.07	-
D16	4.49	1.45	0.71	0.22	0.19	0.03	0.07	-	-	-
AK4-1	2.02	1.51	0.03	0.16	0.20	0.09	0.25	-	-	1.14

Card 1/4

APPROVED FOR RELEASE: 08/26/2000 CIA-RDP86-00513R001653520012-6"

"APPROVED FOR RELEASE: 08/26/2000 CIA-RDP86-00513R001653520012-6

The design of the test specimen (Fig.2) was chosen after a study of the effect of the type of flange and lubricant on the test results. It was recommended, to prepare the specimens from round rods and not from pressed plates, as during the pressing process the latter become anisotropic. Paraffin and stearin were used for lubricating the specimens, and oil for lubricating the pressing tools. The deformations were measured with a Martens tensometer. The experiments included an attempt to determine the Poisson factor in the elastic-plastic compression interval and the theoretical dependence of the Poisson factor on the deformation degree, using A.M.Zhukov's formula (Ref.18. Izvestiya AN SSSR, 1954, no.12); the obtained theoretical values agreed well with the empirical values. The compression curve $\sigma = \Phi(\varepsilon)$ was approximated by a linear-rational function used by G.T.Ivanov and I.A.Skoryy for the approximation of tension curves (Ref.19, Ivanov, G.T., Skoryy, I.A., K voprosu ob approksimatsii diagramm deformirovaniya [Contribution to the approximation of deformation curves], Sb. trudov MMTI, vyp 37, Oborongiz, 1959). Conclusions: (1) There is no essential difference between the moduli of elasticity, elasticity limits and yield limits of the investigated alloys in the [illegible] and aged state either during compression or during tension. (2) At high deformations ($\varepsilon > 0.5\%$), the modulus of hardening during compression is high-

APPROVED FOR RELEASE: 08/26/2000 CIA-RDP86-00513R001653520012-6"

"APPROVED FOR RELEASE: 08/26/2000 CIA-RDP86-00513R001653520012-6

31651
S/536/61/000/051/006/006
D040/D112

Investigation of the ...

er than the modulus of hardening during tension. (3) The Poisson factor increases with increasing deformation (up to $\varepsilon = 1.0\%$) up to $0.4 \div 0.45$. (4) Hyperbolic approximation of tension and compression curves proved satisfactory. The following are mentioned: E. Siebel, V.D.Kuznetsov, M.A.Bol'shanina, K.K. Likharev, A.S.Kalmanok, V.R.Regel', K.V.Ruppeneyt, S.I.Ratner and Yu.S. Danilov, A.V.Rastegayev and G.D.Polosatkin. There are 7 figures, 4 tables and 19 references: 11 Soviet and 8 non-Soviet-bloc. The four most recent references to English-language publications read as follows: Stowell, E., Pridle, R., NACA Techn. Notes, 1956, N 3736; Mathauser, Eldon, Deveikis, NACA Report, 1957, N 1308; Book of ASTM Standards, 1956, Part 2; ASTM Bulletin, 1956, N 215.

X

Card 3/4

APPROVED FOR RELEASE: 08/26/2000 CIA-RDP86-00513R001653520012-6"

"APPROVED FOR RELEASE: 08/26/2000 CIA-RDP86-00513R001653520012-6

Investigation of the ...

S/536/61/000/051/006/006
D040/D112

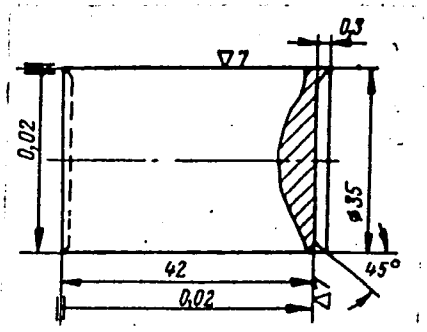

Fig. 2. Specimen for compression tests.

Card 4/4

APPROVED FOR RELEASE: 08/26/2000 CIA-RDP86-00513R001653520012-6"

"APPROVED FOR RELEASE: 08/26/2000 CIA-RDP86-00513R001653520012-6

AGAMIROV, V.L., kand. tekhn. nauk; AMEL'YANCHIK, A.V., inzh.; ANDREYEVA, L.Ye., kand. tekhn. nauk; BIDERMAN, V.L., doktor tekhn. nauk; BOYARSHINOV, S.V., kand. tekhn. nauk; VOL'MIR, A.S., prof., doktor tekhn. nauk; DIMENTBERG, F.M., doktor tekhn. nauk; KOSTYUK, A.G., kand. tekhn. nauk; MAKUSHIN, V.M., kand. tekhn. nauk; MASLOV, G.S., kand. tekhn. nauk; MALININ, N.N., prof., doktor tekhn. nauk; PONOMAREV, S.D., prof. doktor tekhn. nauk; PRIGOROVSKIY, N.I., prof., doktor tekhn. nauk; SERENSEN, S.V., akademik; STEPANOVA, V.S., inzh.; STRELYAYEV, V.S., inzh.; TRAPEZIN, I.I., prof., doktor tekhn. nauk; UMANSKIY, A.A., prof., doktor tekhn. nauk; FEODOS'YEV, V.I., prof., doktor tekhn. nauk; SHATALOV, K.T., doktor tekhn.nauk; YUMATOV, V.P., kand. tekhn. nauk; BLAGOSKLONOVA, N.Yu., red. izd-va; YEVSTRAT'YEV, A.I., red. izd-va; SOKOLOVA, T.F., tekhn. red.

[Manual for a mechanical engineer in six volumes] Spravochnik mashinistroitelia v shesti tomakh. Red. sovet N.S.Acherkan i dr. Izd.3., ispr. i dop. Moskva, Mashgiz. Vol.3. 1962. 651 p. (MIRA 15:4)

1. Akademiya nauk USSR (for Serensen).
(Machinery--Design)

APPROVED FOR RELEASE: 08/26/2000 CIA-RDP86-00513R001653520012-6"

"APPROVED FOR RELEASE: 08/26/2000 CIA-RDP86-00513R001653520012-6

S/122/62/000/003/002/007
D262/D302

AUTHORS: Serensen, S.V., Academician, AS UkrSSR, and Strelyayev V.S., Engineer

TITLE: Static structural strength of glass plastics

PERIODICAL: Vestnik mashinostroyeniya, no. 3, 1962, 13 - 21

TEXT: The mechanical properties of glass plastics, obtained from the experiments conducted at the Institut mashinovedeniya AN SSSR (Institute of Machine Science AS USSR) and also from other sources, are recorded in form of graphs and tables, analyzed and the following general conclusions reached: Tensile strength and elastic properties vary within wide limits, depending on the structure and the properties of the reinforcing glass filler. Non-uniformity of structure is higher than in structural steels and alloys. This non-uniformity causes considerable dispersion of the strength of details which can be determined statistically with the help of the homogeneity indicator and also by the dependence of strength on area and volume of the detail material. Dispersion of the strength characte-/

Card 1/2

Card 2/2

APPROVED FOR RELEASE: 08/26/2000 CIA-RDP86-00513R001653520012

"APPROVED FOR RELEASE: 08/26/2000 CIA-RDP86-00513R001653520012-6

S/032/62/028/004/012/026
B105/B101

AUTHORS: Serensen, S. V., and Strelyayev, V. S.

TITLE: Principal trends in mechanical examinations and studies of the strength of plastic constructions

PERIODICAL: Zavodskaya laboratoriya, v. 28, no. 4, 1962, 470 - 474

TEXT: Deformation rate, sensitivity to stress superposition, size and technological factors, and the effect of alternating loads influence the results of mechanical examinations of plastics. Checking of previous test values therefore has become necessary to obtain comparable results. Different deformation rates were obtained by ГОСТ-4649-55 (GOST-4649-55) tensile tests, GOST 4648-56 compression tests, and GOST 4651-49 bending tests. Tension values according to DIN 53455 and ISO No 193 differ almost by the threefold. The number of samples recommended (3 - 5) is not sufficient to obtain the correct mean value, especially for glass reinforced plastics. There are no specifications as to the testing of anisotropic plastics. Laboratories cannot be equipped adequately, since testing devices are not being produced in series. The main principles for testing

Card 1/2

APPROVED FOR RELEASE: 08/26/2000 CIA-RDP86-00513R001653520012-6"

"APPROVED FOR RELEASE: 08/26/2000 CIA-RDP86-00513R001653520012-6

devices are: (1) short time tests with a static load at given deformation rates variable within several orders of magnitude. They are to include recordings and changes in temperature and atmosphere(also vacuum). For long-term test units with static load, the application of (a) constant stress, (b) constant deformation, and (c) constant deformation rate, is required. The application of asymmetric load cycles, automatic control, and devices for the observation of crack formation is provided for units with alternating loads. A frequency range from 0.2 to 2000 cps is desired. Recording of deformation rates to 100 - 200 %/sec is required for impact test units. Shortage of uniform examination methods for plastics has been occasionally criticized at several conferences. A coordinated development of uniform methods to solve the above problems is demanded.

APPROVED FOR RELEASE: 08/26/2000 CIA-RDP86-00513R001653520012-6"

"APPROVED FOR RELEASE: 08/26/2000 CIA-RDP86-00513R001653520012-6

S/032/62/028/004/015/026
B124/B101

AUTHORS: Serensen, S. V., and Strelyayev, V. S.

TITLE: The effect of absolute size in tensile tests of glass-reinforced structural plastics

PERIODICAL: Zavodskaya laboratoriya, v. 28, no. 4, 1962, 483 - 485

TEXT: Tensile stresses were applied to one axis of elastic symmetry of the heat-cured glass-reinforced plastics АГ-4с (AG-4s), Р-49с (R-49s), and 33-18с (33-18s) with strain rates ranging from about 0.2 to $0.5 \cdot 10^{-2}$ sec^{-1} and cross sections of the samples varying between 20 and 600 mm^2. Mean values of tensile strength, mean square deviation, the variation coefficient, and empirical distribution functions of tensile strength were determined. The linear relation: $\log\sigma_i = A - k \log F_i$ (1) is shown to hold between the cross section of the sample and its tensile strength. Thus, the relation between the magnitude of the stressed area and the corresponding tensile strength is: $\sigma_1/\sigma_2 = (F_2/F_1)^k$ (2), where k is a constant depending on the properties of the material. According to W.

Card 1/2

APPROVED FOR RELEASE: 08/26/2000 CIA-RDP86-00513R001653520012-6"

"APPROVED FOR RELEASE: 08/26/2000 CIA-RDP86-00513R001653520012-6

Weibull (see below) the inhomogeneity coefficient m was calculated from experimental tensile data and determined graphically. It was found for AG-4s: m = 6.48 - 6.63; for 33-18s: m = 16.5 - 15.5; for R-49s (after thermal treatment): m = 10.52 - 10.5, and for untreated R-49s: m = 5.7-5.65. It is obvious from these results that (1) glass-reinforced plastics containing brittle binders are more sensitive to the absolute scale effect; (2) Weibull's theory is sufficient to interpret the dependence of tensile strength on the absolute dimensions; (3) samples having cross sections of 75 to 100 mm^2 at least should be tested. There are 3 figures and 1 table. The English-language reference is: W. Weibull. A Statistical Theory of the Strength of Materials (1939).

APPROVED FOR RELEASE: 08/26/2000 CIA-RDP86-00513R001653520012-6"

"APPROVED FOR RELEASE: 08/26/2000 CIA-RDP86-00513R001653520012-6

SERENSEN, S.V., akademik; STRELYAYEV, V.S., inzh.

Static structural strength of glass reinforced plastics.
Vest.mash. 42 no.3:13-21 Mr '62. (MIRA 15:3)

1. Akademiya nauk Ukrainskoy SSR(for Serensen).
(Glass reinforced plastics)

APPROVED FOR RELEASE: 08/26/2000 CIA-RDP86-00513R001653520012-6"

"APPROVED FOR RELEASE: 08/26/2000 CIA-RDP86-00513R001653520012-6

STRELYAYEV, V.S., inzh.

Scientific technical conference on mechanical wear of metals.
Vest.mashinostr. 42 no.8:81-82 Ag '62. (MIRA 15:8)
(Mechanical wear)

APPROVED FOR RELEASE: 08/26/2000 CIA-RDP86-00513R001653520012-6"

"APPROVED FOR RELEASE: 08/26/2000 CIA-RDP86-00513R001653520012-6

SHENSEN, S. V.; STRELYAYEV, V. S.

"Creep resistance and low-cycle fatigue of fiberglass plastics."

Report to be submitted for the Joint International Conference on Creep, New York, 25-29 Aug 63.

APPROVED FOR RELEASE: 08/26/2000 CIA-RDP86-00513R001653520012-6"

"APPROVED FOR RELEASE: 08/26/2000 CIA-RDP86-00513R001653520012-6

L 10797-65 EPA(s)-2/EWT(m)/EPF(c)/EPR/EWP(j)/T Pc-4/Pr-4/Ps-4/Pt-10
ASDF-2 WW/RM
ACCESSION NR: AP4037629 S/0145/64/000/003/0059/0071

AUTHORS: Strelyayev, V. S. (Assistant); Zaytsev, G. P. (Aspirant)

TITLE: Dispersion characteristics of transient static strength of fiberglass in connection with absolute dimension effect and nonhomogeneity of stressed state

SOURCE: IVUZ. Mashinostroyeniye, no. 3, 1964, 59-71

TOPIC TAGS: stress limit, dispersion, stress concentration, confidence interval, statistical theory, notched specimen, elastic limit/AG-4s fiberglass, 33 18s fiberglass

ABSTRACT: The experimental results of the values of the short-time tensile strength of AG-4s and 33-18s fiberglass are discussed in connection with dimension effect, stress concentration, and temperature. The data are treated statistically in view of the large experimental scatter. Both smooth and notched specimens with 20-200 mm^2 cross sections were tested at normal temperatures and other specimens with 20-100 mm^2 cross sections were tested at 150C. Statistical evaluation was done on the basis of the law of normal distribution determined from given probability confidence level, confidence interval, and dispersion characteristics. The analysis indicates that the magnitude in stress limit dispersion in notched AG-4s specimens

APPROVED FOR RELEASE: 08/26/2000 CIA-RDP86-00513R001653520012-6"

"APPROVED FOR RELEASE: 08/26/2000 CIA-RDP86-00513R001653520012-6

decreases with an increase in absolute dimension and in concentration

Card 1/2

L 10797-65
ACCESSION NR: AP4037629

This is also true for the smooth specimens. However, the distribution of stress is nonhomogeneous in 33-18s specimens and does not depend on dimension or stress concentration. With a rise in temperature, the specimens loaded and notched at an angle to the axis of elastic symmetry showed a decrease in stress limit dispersion. Orig. art. has: 11 figures, 4 tables, and 4 formulas.

ASSOCIATION: Moskovskiy aviatsionnyy tekhnologicheskiy institut (Moscow Aviation Technological Institute)

SUBMITTED: 27Feb62 ENCL: 00

SUB CODE: MT NO REF SOV: 003 OTHER: 002

Card 2/2

APPROVED FOR RELEASE: 08/26/2000 CIA-RDP86-00513R001653520012-6"

"APPROVED FOR RELEASE: 08/26/2000 CIA-RDP86-00513R001653520012-6

SHREINSEN, S.V., red.; STRELYAYEV, V.S., kand. tekhn. nauk, red.

[Problems of mechanical fatigue] Voprosy mekhanicheskoi ustalosti. Moskva, Mashinostroenie, 1964. 378 p. (MIRA 18:2)

APPROVED FOR RELEASE: 08/26/2000 CIA-RDP86-00513R001653520012-6"

"APPROVED FOR RELEASE: 08/26/2000 CIA-RDP86-00513R001653520012-6

L 26951-65 EPA(s)-2/EWT(m)/EWP(w)/EPF(c)/EPR/EWP(j)/T Pc-4/Pr-4/Ps-4 WW/EM/RM

ACCESSION NR: AT5003522 S/2681/64/000/011/0127/0145

AUTHORS: Strelyayev, V. S.; Tarnopol'skiy, Yu. M.; Timofeyev, A. F.; Shlitsa, R. P.

TITLE: Effect of casting parameters on the strength of articles made of transparent plastic

SOURCE: AN LatSSR. Otdeleniye fizicheskikh i tekhnicheskikh nauk. Voprosy dinamiki i prochnosti, no. 11, 1964, 127-145

TOPIC TAGS: polymer, transparent plastic, casting, production conditions

ABSTRACT: The article describes results of experiments made in order to establish optimal hot-pressing conditions for glass-plastics AG-4V and AG-4S on the basis of static tests. The tests were made on plastic in the form of cylinders, bolts, cones, and plates. The optimal hot-pressing behavior was studied under conditions used

Card 1/2

APPROVED FOR RELEASE: 08/26/2000 CIA-RDP86-00513R001653520012-6"

"APPROVED FOR RELEASE: 08/26/2000 CIA-RDP86-00513R001653520012-6

L 26951-65

ACCESSION NR: AT5003522

in practice for production of parts from this material. The results show that the best pressing temperature is 130C, and that when the temperature is increased to 170C the strength of the product usually decreases. The optimum soaking time is from 1 to 3 min/mm, beyond which the strength decreases. The optimal pressure is 300 ± 100 kg/cm^2, with higher pressures required for irregularly shaped parts (cylinder, cone) than for parts with simpler configuration. 100--200 kg/cm^2 is sufficient for plates. The characteristics of the parts depend also on their size. Numerous tables and diagrams illustrating the results are presented. Orig. art. has: 11 figures, 3 formulas, and 2 tables.

ASSOCIATION: None

SUBMITTED: 00 ENCL: 00 SUB CODE: MT, IE

NR REF SOV: 007 OTHER: 003

Card 2/2

APPROVED FOR RELEASE: 08/26/2000 CIA-RDP86-00513R001653520012-6"

"APPROVED FOR RELEASE: 08/26/2000 CIA-RDP86-00513R001653520012-6

[illegible], [illegible], kand.tekhn.nauk

Conference on statistical investigation of reliability in the manufacture of machinery. Vest.mashinostr. 45 no.2:84-87 F '65. (MIRA 18:4)

APPROVED FOR RELEASE: 08/26/2000 CIA-RDP86-00513R001653520012-6"

"APPROVED FOR RELEASE: 08/26/2000 CIA-RDP86-00513R001653520012-6

STRELYAYEV, V.S., kand. tekhn.nauk

All-Union conference on the problems of mechanical fatigue.
Vest.mashinostr. 45 no.11:79-80 N '65. (MIRA 18:12)

APPROVED FOR RELEASE: 08/26/2000 CIA-RDP86-00513R001653520012-6"

"APPROVED FOR RELEASE: 08/26/2000 CIA-RDP86-00513R001653520012-6

L 12968-63 EPR/EWP(j)/EPF(c)/EWT(m)/BDS AFFTC/ASD Ps-4/Pc-4/Pr-4 RM/WW

ACCESSION NR: AP3000401 S/0191/63/000/005/0040/0046

73
72

AUTHOR: Gurevich, B. G.; Strelyayev, V. S.

TITLE: Study of the strength characteristics of some glass-fiber compositions

SOURCE: Plasticheskiye massy*, no. 5, 40-46, 1963

TOPIC TAGS: strength characteristics, glass-fiber compositions

ABSTRACT: Lack of adequate detailed data motivated these studies on the tensile, bending, and shear strengths of a number of glass-fiber compositions (AG-4S, R-25S, R-49S, 33-18S, KAST-V) with various thermosetting binders. In all cases, the ratio of binder to glass fiber (5-7 micra in diameter) was 30:70, and both flat and cylindrical samples of the molding compounds were tested at various temperatures. The modulus of elasticity (E), Poisson coefficient, maximum tensile strength (Sigma sub B), and relative elongation at break (Epsilon sub B) were determined for each formulation, as was the correlation between Sigma sub B and E sub 0 (E sub 0 calculated at same stress, Sigma sub 0 = 4 kg/sec/mm sup 2, for all materials) and the effect of thermal treatment. At higher temperatures (up to 250C), the nonlinearity of the correlation of Sigma and E with Epsilon was more pronounced than at 150-170C. The maximum strength of R-49S was almost doubled by treatment at 150-170C, the modulus of elasticity increased by about 12%, but thermal treatment has little effect on

Card 1/2

APPROVED FOR RELEASE: 08/26/2000 CIA-RDP86-00513R001653520012-6"

"APPROVED FOR RELEASE: 08/26/2000 CIA-RDP86-00513R001653520012-6

L 12968-63
ACCESSION NR: AP3000401

the strength of the other formulations tested. All of the materials had very low Poisson coefficients (0.04-0.15). Susceptibility to concentrated pressure under short- and long-term static stress was tested on unnotched and notched flat samples: in both cases, strength decreased with an increase in cross-section area. At increased temperatures, the influence of scale effect and pressure concentration was reduced. The strongest of the materials tested was 33-18S (epoxy resin base modified with polyurethane): at all concentrations of pressure, it showed a relatively slight increase in susceptibility to stress with time, averaging 50-60% of its maximum short-term strength after 10,000 hours at 20C. Orig. art. has: 12 figures, 5 tables.

ASSOCIATION: none

SUBMITTED: 00 DATE ACQ: 10Jun63 ENCL: 00

SUB CODE: MA NO REF SOV: 005 OTHER: 010

Card 2/2

APPROVED FOR RELEASE: 08/26/2000 CIA-RDP86-00513R001653520012-6"

"APPROVED FOR RELEASE: 08/26/2000 CIA-RDP86-00513R001653520012-6

STRELYAYEVA, V.M.; LAPAYEVA, N.I.; MEL'KUMOVA, L.P.

Natural tularemia foci in the Turkmen S.S.R. Zdrav. Turk. 8 no.2:31-34 F'64 (MIRA 17:4)

1. Iz Turkmenskoy respublikanskoy sanitarno-epidemiologicheskoy stantsii (glavnyy vrach V.Mamayev).

APPROVED FOR RELEASE: 08/26/2000 CIA-RDP86-00513R001653520012-6"

"APPROVED FOR RELEASE: 08/26/2000 CIA-RDP86-00513R001653520012-6

[illegible], [illegible], kand. veterin. nauk; [illegible], N.G., mladshiy nauchnyy [illegible]

Differentiation of the Brucella abortus vaccine strain No.19 from epizootic strains. Veterinariia 41 no.12:16-17 D '64. (MIRA 18:9)

1. Stavropol'skaya nauchno-issledovatel'skaya veterinarnaya stantsiya.

APPROVED FOR RELEASE: 08/26/2000 CIA-RDP86-00513R001653520012-6"

"APPROVED FOR RELEASE: 08/26/2000 CIA-RDP86-00513R001653520012-6

ZAKHOVSKIY, Yo.M., kand.tekhn.nauk, dotsent; SHELYUK, M.I., inzh.

Electrodynamic forces when bus conductor phases are a random disposition. Izv.vys.ucheb.zav.; energ. 8 no.12:8-16 D '65. (MIRA 19:1)

1. Belorusskiy politekhnicheskiy institut. Predstavlena kafedroy elektricheskikh stantsiy. Submitted September 25, 1965.

APPROVED FOR RELEASE: 08/26/2000 CIA-RDP86-00513R001653520012-6"

"APPROVED FOR RELEASE: 08/26/2000 CIA-RDP86-00513R001653520012-6

STRELYUKHIN, A.K.; KRASIK, Ye.D.; FRAGINA, D. Yu.; TSARICHENKO, V.V.

Results of training psychiatrists at a local base in Ryazan Province. Zhur. nevr. i psikh. 63 no.2:313-314 '63 (MIRA 16:11)

1. Kafedra psikhiatrii (zav. - prof. A.K. Strelyukhin) Ryazanskogo meditsinskogo instituta imeni I.P. Pavlova, Ryazanskaya psikhonevrologicheskaya bol'nitsa (glavnyy vrach V.V. TSarichenko) i Ryazanskiy psikhonevrologicheskiy dispanser (glavnyy vrach - kand. med. nauk Ye.D. Krasik).

*

APPROVED FOR RELEASE: 08/26/2000 CIA-RDP86-00513R001653520012-6"

"APPROVED FOR RELEASE: 08/26/2000 CIA-RDP86-00513R001653520012-6

STRELYUKHIN, A.K., prof.; SHELEST, Ye.N.; SHCHERBAKOVA, N.I.; GRIGOR'YEV, V.I.; MAROCHKIN, V.V.

Examination of the higher nervous activity in workers of the carbon disulfide department of the Ryazan Combine of Artificial Fibers. Nauch. trudy Riaz.med.inst. 23:97-103 '63. (MIRA 18:12)

1. Kafedra psikhiatrii (zav. kafedroy - prof. A.K.Strelyukhin) Ryazanskogo meditsinskogo instituta imeni akademika I.P. Pavlova.

APPROVED FOR RELEASE: 08/26/2000 CIA-RDP86-00513R001653520012-6"

"APPROVED FOR RELEASE: 08/26/2000 CIA-RDP86-00513R001653520012-6

STRELYUKHINA, T.F., kandidat meditsinskikh nauk

Length of retention of bactericidal effect of ointments containing formaldehyde. Stomatologiia 35 no.2:15-17 Mr-Ap '56. (MLRA 9:8)

1. Iz kafedry terapevticheskoy stomatologii (i.o. zav.-dotsent T.T. Shkolyar) stomatologicheskogo fakul'teta Leningradskogo sanitarno-gigiyenicheskogo meditsinskogo instituta.
(FORMALDEHYDE). (OINTMENTS) (BACTERICIDES)

APPROVED FOR RELEASE: 08/26/2000 CIA-RDP86-00513R001653520012-6"

"APPROVED FOR RELEASE: 08/26/2000 CIA-RDP86-00513R001653520012-6

STRELYUKHINA, T.F., kandidat meditsinskikh nauk

Retention time of formaldehyde in pastes used for filling root canals and for mumifying dental pulp stumps. Stomatologiia 36 no.2:23-24 Mr-Ap '57. (MLRA 10:6)

1. Iz kafedry terapevticheskoy stomatologii (i.o. zav. - dotsent T.T.Shkolyar) stomatologicheskogo fakul'teta Leningradskogo sanitarno-gigiyenicheskogo meditsinskogo instituta.
(FORMALDEHYDE) (DENTISTRY)

APPROVED FOR RELEASE: 08/26/2000 CIA-RDP86-00513R001653520012-6"

"APPROVED FOR RELEASE: 08/26/2000 CIA-RDP86-00513R001653520012-6

STRELYUKHINA, T.F.

Method of studying the properties of phosphate cement for fixation of nonremovable dental prostheses. Trudy LSGMI 63:169-172 '60. (MIRA 15:1)

(DENTAL MATERIALS)

APPROVED FOR RELEASE: 08/26/2000 CIA-RDP86-00513R001653520012-6"

"APPROVED FOR RELEASE: 08/26/2000 CIA-RDP86-00513R001653520012-6

STRELYUKHINA, T.F., kand.med.nauk; VISSARIONOVA, O.A.

Properties of dental cements. Comments on A.N. Shadrina's article "Improving the quality of Soviet cements." Stomatologiia 40 no.4:21-22 Jl-Ag '61. (MIRA 14:11)

1. Iz Leningradskogo zavoda zubovrachebnykh materialov.
(DENTAL MATERIALS) (SHADRINA, A.N.)

APPROVED FOR RELEASE: 08/26/2000 CIA-RDP86-00513R001653520012-6"

"APPROVED FOR RELEASE: 08/26/2000 CIA-RDP86-00513R001653520012-6

STRELYUKHINA, T.F., kand. med. nauk

Clinical and laboratory investigation of the properties of phosphate cement as filling material. Stomatologiia 42 no.4: 74-77 Jl-Ag'63 (MIRA 17:4)

1. Iz klinicheskoy laboratorii (zav. - prof. I.S. Rubinov) Leningradskogo zavoda zubovrachebnykh materialov (direktor - A.N. Zhagot).

APPROVED FOR RELEASE: 08/26/2000 CIA-RDP86-00513R001653520012-6"

"APPROVED FOR RELEASE: 08/26/2000 CIA-RDP86-00513R001653520012-6

STRELYUKINA, G.

Conference of active medical personnel of Ryazan Province. Zdrav. Ros.Feder. 2 no.3:45-48 Mr '58. (MIRA 11:3)
(RYAZAN PROVINCE--PUBLIC HEALTH)

APPROVED FOR RELEASE: 08/26/2000 CIA-RDP86-00513R001653520012-6"

"APPROVED FOR RELEASE: 08/26/2000 CIA-RDP86-00513R001653520012-6

STRELYUKINA, G.A.

Epidemiological analysis of an outbreak of typhoid fever. Zhur. mikrobiol., epid. i immun. 40 no.6:29-33 Je '63. (MIRA 17:6)

1. Iz Ryazanskogo oblastnogo otdela zdravookhraneniya.

APPROVED FOR RELEASE: 08/26/2000 CIA-RDP86-00513R001653520012-6"

"APPROVED FOR RELEASE: 08/26/2000 CIA-RDP86-00513R001653520012-6

STRELYUKHINA, N.V.

Purine metabolism in leukemia. Ter. arkh. 35 no.7:100-106 Jl'63 (MIRA 17:1)

1. Iz kafedry propedevtiki terapii (zav. - prof. I.V.Zherdin) Volgogradskogo meditsinskogo instituta i 3-y kafedry terapii (zav. - chlen-korrespondent AMN SSSR prof. I.A. Kassirskiy) TSentral'nogo instituta usovershenstvovaniya vrachey.

APPROVED FOR RELEASE: 08/26/2000 CIA-RDP86-00513R001653520012-6"

"APPROVED FOR RELEASE: 08/26/2000 CIA-RDP86-00513R001653520012-6

STREM, F

STREM, F.

Gauging air compressor pumps.

p. 171 (Gep) Vol. 9, No. 5, July 1957, Budapest, Hungary

SO: MONTHLY INDEX OF EAST EUROPEAN ACCESSIONS (EEAI) LC, VOL. 7, NO. 1, JAN. 1958

APPROVED FOR RELEASE: 08/26/2000 CIA-RDP86-00513R001653520012-6"

"APPROVED FOR RELEASE: 08/26/2000 CIA-RDP86-00513R001653520012-6

STREMBOVSKIY, N.Ye. (Moskva)

We shall welcome the 22d Congress of the CPSU in the communist way. (MIRA 14:10)
Shvein.prom. no.5:5-6 Jl-Ag [i.e.S-O] '61.
(Moscow--Clothing industry--Labor productivity)

APPROVED FOR RELEASE: 08/26/2000 CIA-RDP86-00513R001653520012-6"

"APPROVED FOR RELEASE: 08/26/2000 CIA-RDP86-00513R001653520012-6

STREMENOVA, J.

CZECHOSLOVAKIA

IVORAKOVA, B.; STREMENOVA, J.

No affiliation given

Bratislava, Farmaceuticky obzor, No 1 [Jan] 1967, pp 6-11

"Tenth anniversary of the founding of the Pharmaceutical Assistant Section, Central Health Services School (Stredna Zdravotnicka Skola) in Bratislava."

APPROVED FOR RELEASE: 08/26/2000 CIA-RDP86-00513R001653520012-6"

"APPROVED FOR RELEASE: 08/26/2000 CIA-RDP86-00513R001653520012-6

PETROV, V. (g.Yevpatoriya); STREMENTAREV, Yu., tekhnolog; TORYANIK, M., inzh.; KARPOV, V., inzh.; PREOBRAZHENSKIY, A., ispolnyayushchiy obyazannosti tekhnoruka; MARKELOV, D., tokar'; KOTTEL, Yu., tekhnoruk

Innovators' contribution to industry. Prom.koop. 13 no.1:20-21 Ja '59. (MIRA 12:2)

1. Artel' "9-ya mekhanicheskaya," g. Moskva (for Strementarev). 2. Oblpromsovet, g. Sumy (for Toryanik). 3. Oblpromsovet, g. Sverdlovsk (for Karpov). 4. Artel' "Ob"yedinennnyy trud," g. Ivanovo (for Preobrazhenskiy). 5. Artel' imeni III Internatsionala, g. Kerch (for Markelov). 6. Artel' "Kul'tkhim," g. Kiyev (for Kottel').

(Inventions, Employees')

APPROVED FOR RELEASE: 08/26/2000 CIA-RDP86-00513R001653520012-6"

"APPROVED FOR RELEASE: 08/26/2000 CIA-RDP86-00513R001653520012-6

STREMETSKIY, G.F.

Significance of color precipitation reaction of urine in the clinical picture of scarlet fever. G. F. Stremetskiĭ, *Pediatriya* 1954, No. 4, 58-61.—The color pptn. reaction for urine (cf. Kimbarovskiĭ, *Vrachebnoe Delo* 1950, No. 8) performed with 0.5 ml. of 5% $AgNO_3$ per 1 ml. urine sample was examd. with scarlet fever patients. In 79.5% of cases the test was definitely pos., while in patients with complicated forms it was pos. in 88.3%. The reaction appears more sensitive than the rate of pptn. of erythrocytes.

G. M. Kosolapoff

Inst. Infectious Diseases, AMS USSR

APPROVED FOR RELEASE: 08/26/2000 CIA-RDP86-00513R001653520012-6"

"APPROVED FOR RELEASE: 08/26/2000 CIA-RDP86-00513R001653520012-6

APPROVED FOR RELEASE: 08/26/2000 CIA-RDP86-00513R001653520012-6"

"APPROVED FOR RELEASE: 08/26/2000 CIA-RDP86-00513R001653520012-6

STRIMENSKIY, G.F. (Kiyev); [illegible], A.L. (Kiyev)

Methodology of the electroscopic study of allantoic cultures of the influenza virus. Zbor.nauch.trud. Inst.infek.bol. [illegible] '64. (MIRA 18:6)

APPROVED FOR RELEASE: 08/26/2000 CIA-RDP86-00513R001653520012-6"

"APPROVED FOR RELEASE: 08/26/2000 CIA-RDP86-00513R001653520012-6

[illegible], [illegible]

21[illegible] [illegible], [illegible]. Fizicheskoe sostoyanie [illegible] zhavezdnogo vodoroda. (Per. [illegible] Angl.) Astrofiz. Sbornik. [illegible], 1949, s. [illegible]-42 Bibliogr: [illegible] 42

SO: [illegible] Zhurnal'nykh [illegible], [illegible], Moskva, 19[illegible].

APPROVED FOR RELEASE: 08/26/2000 CIA-RDP86-00513R001653520012-6"

"APPROVED FOR RELEASE: 08/26/2000 CIA-RDP86-00513R001653520012-6

POKOTINSKIY, I.S.; SOKOLOVA, N.M.; STREMILOVA, A.Ye.

Electron microscopic studies on the morphological structure of Mycobacterium tuberculosis. Probl.tub. 38 no.4:94-99 '60. (MIRA 14:5)

(MYCOBACTERIUM TUBERCULOSIS)

APPROVED FOR RELEASE: 08/26/2000 CIA-RDP86-00513R001653520012-6"

"APPROVED FOR RELEASE: 08/26/2000 CIA-RDP86-00513R001653520012-6

L 42957-66 EWT(m)/EWP(t)/ETI IJP(c) JD

ACC NR: AR6024993 SOURCE CODE: UR/0081/66/000/007/L013/L014

23
B

AUTHOR: Sorokin, I. P.; Stremilova, N. N.

21

TITLE: Study of the rate of dissolution of germanium in hydrochloric acid solutions of ferric chloride

SOURCE: Ref. zh. Khimiya, Part II, Abs. 7L112

REF SOURCE: Khim. tekhnologiya. Resp. mezhved. nauchno-tekhn. sb., vyp. 2, 1965, 72-77

TOPIC TAGS: germanium semiconductor, solution kinetics, hydrochloric acid, chloride

ABSTRACT: The dissolution rate of Ge in aqueous and hydrochloric acid solutions of $FeCl_3$ was studied as a function of the temperature and concentration of the oxidant and solvent. An increase in the $FeCl_3$ concentration in 8.7 N HCl increases the dissolution rate of Ge. In solutions of constant $FeCl_3$ concentration and variable concentration of free HCl, the dissolution rate of Ge has a maximum corresponding to an acid concentration of ~ 5 N HCl. Both an increase in HCl concentration and its decrease from 5 N HCl cause a sharp decrease in the dissolution rate of Ge; this is due to a decrease in the solubility of the reaction products. The amount of reacted Ge varies in stoichiometric proportion to the amount of reduced $FeCl_2$; this proves that the proposed reaction mechanism, in which $FeCl_3$ acts as an oxidant, is correct. The high activation energy (E > 14 kcal/mole) and the lack of the influence of stirring on the

Card 1/2

APPROVED FOR RELEASE: 08/26/2000 CIA-RDP86-00513R001653520012-6"

"APPROVED FOR RELEASE: 08/26/2000 CIA-RDP86-00513R001653520012-6

L 42957-66

ACC NR: AR6024993

C

dissolution rate of Ge show that the rate of Ge dissolution is determined by the rate of the heterogeneous reaction taking place at the phase boundary. An acceleration of the dissolution of Ge in HCl is achieved when two or several oxidants are present in the hydrochloric acid solutions. Thus, for example, the simultaneous introduction of $FeCl_3$ and HNO_3 into the HCl solution increases the average dissolution rate of semiconductor Ge many times. From authors' abstract. [Translation of abstract]

SUB CODE: 07, 20/

Card 2/2

APPROVED FOR RELEASE: 08/26/2000 CIA-RDP86-00513R001653520012-6"

"APPROVED FOR RELEASE: 08/26/2000 CIA-RDP86-00513R001653520012-6

EWT(m)/T/EWP(t)/EWP(b) IJP(c) JD

ACC NR: AP6003616 SOURCE CODE: UR/0054/65/000/003/0119/0122

AUTHOR: Sorokin, I. P.; Stremilova, N. N.; Orlova, G. M.

ORG: Leningrad State University (Leningradskiy gosudarstvennyy universitet)

57
B

TITLE: Dissolution of germanium in hydrochloric acid solutions of potassium dichromate

SOURCE: Leningrad. Universitet. Vestnik. Seriya fiziki i khimii, no. 3, 1965, 119-122

TOPIC TAGS: germanium, potassium compound, hydrochloric acid, activation energy, etched crystal, solution kinetics, germanium single crystal

ABSTRACT: The solution kinetics of germanium in 7M HCl solutions containing $K_2Cr_2O_7$ in amounts of 0.02, 0.17 and 0.31 mol/l were studied at 20-80°C on n-type Ge single crystal discs with the large surface oriented along the (111) plane. The solution rate of Ge(w) was determined gravimetrically and was calculated from the equation

$$w = \frac{1}{72{,}6t} \cdot \frac{p_1 - p_2}{\pi D\left(\frac{D}{2} + h\right)}$$

Card 1/2 UDC: 546.289 : 532.73

APPROVED FOR RELEASE: 08/26/2000 CIA-RDP86-00513R001653520012-6"

"APPROVED FOR RELEASE: 08/26/2000 CIA-RDP86-00513R001653520012-6

L 11209-66

ACC NR: AP6003616

where p_1 and p_2 are the initial and final weights of Ge(g), D and h are the diameter and thickness of the disc (cm), and t is the time of the experiment. The solution rate increases with the stirring rate in 0.17 and 0.31 M $K_2Cr_2O_7$ solutions in 7M HCl. The activation energy of solution E was found from the linear dependence of log w on $1/T$, and the preexponential factor C_e in the equation

$$w = C_e e^{-E/RT}$$

was obtained. The solution rate increases in direct proportion to the potassium bichromate concentration over the entire temperature range. The dependence of the solution rate on stirring and the low values of the activation energy (less than 10 kcal/mol) indicate that the solution rate is determined by the rate of diffusion of the oxidant toward the surface of the sample. Orig. art. has: 5 figures.

SUB CODE: 07/ SUBM DATE: 20Nov64/ ORIG REF: 003/ OTH REF: 005

Card 2/2

APPROVED FOR RELEASE: 08/26/2000 CIA-RDP86-00513R001653520012-6"

"APPROVED FOR RELEASE: 08/26/2000 CIA-RDP86-00513R001653520012-6

L 6968-66 EWT(m)/EWP(j)/T/EWP(t)/EWP(b)/EWA(c) JD/RM
ACC NR: AP5028202 SOURCE CODE: UR/0079/65/035/009/1512/1517

AUTHOR: Stremilova, N. N.; Sorokin, I. P.; Orlova, G. M. 55 55 55 40 39 B

ORG: Leningrad State University (Leningradskiy gosudarstvennyy universitet) 55

TITLE: Dissolution kinetics of single-crystal germanium in hydrochloric acid solutions of ferric chloride 15 55, 27

SOURCE: Zhurnal obshchey khimii, v. 35, no. 9, 1965, 1512-1517

TOPIC TAGS: solution kinetics, germanium single crystal, iron compound, hydrochloric acid, chloride, germanium compound

ABSTRACT: The dissolution of n-type single crystal germanium disks 10 mm in diameter and 1 mm thick, with their large surface oriented parallel to the (111) plane, was studied in 7.0 M hydrochloric acid solutions containing 0.02 to 2.66 moles $FeCl_3$. It was shown that in 0.33 to 2.66 M $FeCl_3$ solutions in 7.0 M HCl, the dissolution rate of germanium is determined by the rate of the heterogeneous chemical reaction of oxidation of germanium. In 0.02 M $FeCl_3$ in 7.0 M HCl, the dissolution rate is determined by the rate of diffusion. The decrease in the dissolution rate of 14

Card 1/2

UDC: 546.289.131 + 546.8

APPROVED FOR RELEASE: 08/26/2000 CIA-RDP86-00513R001653520012-6"

"APPROVED FOR RELEASE: 08/26/2000 CIA-RDP86-00513R001653520012-6

L 6968-66
ACC NR: AP5028202

germanium in the $FeCl_3$ concentration range from 0.6 to 1.4 M HCl apparently results from the formation of complex compounds between $FeCl_3$ and HCl. The variation of the dissolution rate with the content of free HCl goes through a maximum around 6 M HCl, probably because of the change in the solubility of germanium tetrachloride associated with rising HCl concentration. Orig. art. has: 6 figures, 1 table, and 1 formula.

SUB CODE: GC,SS/ SUBM DATE: 02Jul64/ ORIG REF: 008/ OTH REF: 004

Card 2/2

APPROVED FOR RELEASE: 08/26/2000 CIA-RDP86-00513R001653520012-6"

"APPROVED FOR RELEASE: 08/26/2000 CIA-RDP86-00513R001653520012-6

[illegible]

[illegible]erating stand of the [illegible] equipment of a [illegible]. [illegible]
[illegible], obr. 21 no. [illegible] [illegible]

APPROVED FOR RELEASE: 08/26/2000 CIA-RDP86-00513R001653520012-6"

"APPROVED FOR RELEASE: 08/26/2000 CIA-RDP86-00513R001653520012-6

S/058/63/000/003/006/104
A160/A101

AUTHORS: Makarov, Yu. A., Matveyev, V. V., Popkov, G. K., Prikhodchenko, N.N., Stremin, V. I.

TITLE: A highly-sensitive scintillation thermal-neutron counter capable of operating in powerful gamma fields

PERIODICAL: Referativnyy zhurnal, Fizika, no. 3, 1963, 39, abstract 3A313 ("Sb. rabot po nekotorym vopr. dozimetrii i radiometrii ionizir. izlucheniy. No. 2. M., Gosatomizdat, 1961, 103 - 116)

TEXT: The main factors determining the dependence of the efficiency of scintillation thermal-neutron detectors on their parameters are analyzed. Investigated were detectors into which T-1 luminous compound (an alloy of boric anhydride with ZnS(Ag)) grains with an average diameter of 1 mm were introduced by pressing into the mixture polymethylmethacrylatic powder and methylmethalcrylate monomer. The thickness of the detector was 3, 5, 7 and 10 mm. The concentration of the T-1 grains changed from 100 to 1,000 mg/cm3. The γ-background of an order of 5 roentgen/hours was discriminated to a level of 0.1 - 1 pulse/sec. The maximum efficiency of recording thermal neutrons was obtained at

Card 1/2

APPROVED FOR RELEASE: 08/26/2000 CIA-RDP86-00513R001653520012-6"

"APPROVED FOR RELEASE: 08/26/2000 CIA-RDP86-00513R001653520012-6

a detector thickness of 3 mm and at a T-1 concentration of 600 mg/cm3. The maximum efficiency was ~10%. Hereby, the detector was composed of a mixture containing 31.9 g of the T-1 luminous compound, 42 g of polymethylmethacrylate powder, and 30 g of methylmethacrylate monomer. Since the duration of the pulses caused by the γ-rays equalled 1 μsec, and the length of the pulses caused by the neutrons equalled 2 - 3 μsec, it proved to be possible to somewhat increase the sensitivity of the detector to the thermal neutrons by using the delayed-self-coincidence circuit.

K. Aglintsev

[Abstracter's note: Complete translation]

APPROVED FOR RELEASE: 08/26/2000 CIA-RDP86-00513R001653520012-6"

"APPROVED FOR RELEASE: 08/26/2000 CIA-RDP86-00513R001653520012-6

STREMLINA, S.M.; KRASNITSKAYA, Ye.S. (Moskva)

Problems of further improvement of sanitary conditions in public eating establishments. Vop.pit. 15 no.2:61-62 Mr-Ap '56. (MLRA 9:7)
(NUTRITION,
communal in Russia, sanit. aspects (Rus))

APPROVED FOR RELEASE: 08/26/2000 CIA-RDP86-00513R001653520012-6"

"APPROVED FOR RELEASE: 08/26/2000 CIA-RDP86-00513R001653520012-6

STREMLINA, S.M.

Training of food hygienists. Vop.pit. 15 no.6:47-48 N-D '56. (MLRA 9:12)

1. Iz Sanitarno-epidemiologicheskoy stantsii Moskvy.
(NUTRITION, education,
train. of food hygienists (Rus))

APPROVED FOR RELEASE: 08/26/2000 CIA-RDP86-00513R001653520012-6"

"APPROVED FOR RELEASE: 08/26/2000 CIA-RDP86-00513R001653520012-6

STREMLINA, S.M., sanitarnyy vrach; DOBRUSHINA, S.M., sanitarnyy vrach

Case of "vanillism." Gig. i san., 21 no.7:52 Jl '56. (MLRA 9:9)

1. Iz sanitarno-epidemiologicheskoy stantsii Moskvy.
(VANILLA--TOXICOLOGY)

APPROVED FOR RELEASE: 08/26/2000 CIA-RDP86-00513R001653520012-6"

"APPROVED FOR RELEASE: 08/26/2000 CIA-RDP86-00513R001653520012-6

STREMLINA, S.M.

Second conference on problems in applied food hygiene. Vest.khir. 77 no.11:61-63 N '56. (MLRA 10:1)
(FOOD ADULTERATION AND INSPECTION)

APPROVED FOR RELEASE: 08/26/2000 CIA-RDP86-00513R001653520012-6"

"APPROVED FOR RELEASE: 08/26/2000 CIA-RDP86-00513R001653520012-6

STREMLIN, S. M.; KOVALEVA, R. V.; GOLUBCHIKOVA, E. V.

"On the problem of epidemiology of infectious diseases of salmonellosis origin."

Report submitted at the 13th All-Union Congress of Hygienists, Epidemiologists, and Infectionists. 1959

APPROVED FOR RELEASE: 08/26/2000 CIA-RDP86-00513R001653520012-6"

"APPROVED FOR RELEASE: 08/26/2000 CIA-RDP86-00513R001653520012-6

KRASNITSKAYA, Ye.S.; STREMLINA, S.M.

Conference on food hygiene. Vop. pit. 19 no. 5:86-90 S-O '60. (MIRA 14:2)

(FOOD HANDLING)

APPROVED FOR RELEASE: 08/26/2000 CIA-RDP86-00513R001653520012-6"

"APPROVED FOR RELEASE: 08/26/2000 CIA-RDP86-00513R001653520012-6

STREMLINA, S.M., vrach; PRYANISHNIKOV, V.S., inzh.

Tea drinks. Zdorov'e 6 no.4:31 Ap '60. (MIRA 13:8)
(TEA)

APPROVED FOR RELEASE: 08/26/2000 CIA-RDP86-00513R001653520012-6"