"APPROVED FOR RELEASE: 08/31/2001 CIA-RDP86-00513R001654130006-5

Sviridenko, F.F.

25(1) PHASE I BOOK EXPLOITATION SOV/2132

Kiyev. Ukrainskiy Nauchno-issledovatel'skiy institut metallov

Tekhnologiya proizvodstva i svoystva chernykh metallov; sbornik (The Manufacture and Characteristics of Ferrous Metals; a collection of articles) Khar'kov, Khar'kovskiy gos.univ. im. A.M. Gor'kogo, 1958. 271 p. (Series: Its: Trudy, vyp. 4) Errata slip inserted. 1,000 copies printed.

Editorial Staff of this book: P.A. Aleksandrov, D.S. Kazarnovskiy, M.I. Kurmanov, N.F. Leve, V.P. Onopriyenko, V.A. Tikhovskiy, and Ya. A. Shneyerov; Ed.: S.S. Liberman; Tech. Ed.: K.O. Gurin

PURPOSE: The book is intended for the scientific personnel of institutes and for engineers and technicians of metallurgical enterprises and other branches of the industry.

COVERAGE: The collection of articles reviews the work carried on at the Institute of Metals on the technology of blast furnaces, open-hearth furnaces, and rolled stock production. It also deals with problems in metallography, heat treatment of ferrous metals and methods for their study. Particular attention is devoted to the preparation of charges and blast furnace practice with increased gas pressure, open-hearth production with oxygen blast and rolling of light profiles. No personalities are mentioned. References accompany each article.

TABLE OF CONTENTS:

BLAST FURNACE PRODUCTION

Soldatkin, A.I. Preparation of a High Fluxed Sinter from Manganese Ore 49

Brusov, L.P. Method of Estimating the Reducing and Thermal Gas Work in a Blast Furnace With Different Charges 71

Goncharov, B.P. Study of Processes in the Hearth of the Blast Furnace With Increased Blast Furnace Gas Pressure Steel Making 77

Sladkoshteyev, V.T. Slag-forming in an Open-hearth Furnace With Oxygen Blast 105

Zaytsev, I.A. Effect of Smelting Temperature Regime on the Dephosphorization Process 119

Rabinovich, A.T. Effect of the Technology of the Working Period of a Basic Open-hearth Smelting on the Hydrogen Content in Metal 135

Kovrayskiy, V. B. and F.F. Sviridenko. Effect of the Working Period of Phosphorous Cast Iron Reduction on Hairline Cracks And Seams in Rails 155

ROLLING

Aleksandrov, P.A. Structure and Mechanical Properties of Rolled Steel in Blooming Ingots 165

Gunin, I.V. New Light I-Beams 179

Dolzhenkov, F. Ye. Forward Slip in Rolling Heavy Strip 189

Filippov, I.N. Comprehensive Investigation, Generalization, and Introduction of Progressive Methods and Innovators' Foremost Working Methods on Section Mills 203

Card 4/6 (12)

APPROVED FOR RELEASE: 08/31/2001 CIA-RDP86-00513R001654130006-5"

"APPROVED FOR RELEASE: 08/31/2001 CIA-RDP86-00513R001654130006-5

SOV/130-58-8-8/18

AUTHORS: Sviridenko, F.F. and Popova, A.N.

TITLE: Production of Open-hearth Phosphate Slags at the "Azovstal'" Works (Proizvodstvo martenovskikh fosfat-shlakov na zavode "Azovstal'")

PERIODICAL: Metallurg, 1958, 3, Nr 8, pp 20 - 22 (USSR)

ABSTRACT: The authors describe phosphate slag-making and crushing experience at the "Azovstal'" Works, where a 340 000-ton-a-year slag crushing plant (figure) was commissioned in 1955, slag fertiliser production being organised at the same time. They outline the influence of concentrations of acid and basic oxides in slag on its P_2O_5 content and the phosphate solubility. The latter is determined after sieving through a 0.175 mm aperture screen by a method developed by the Ukrainskiy institut metallov (Ukrainian Institute of Metals) jointly with the works. The complete installation is maintained under a small suction and is provided with air cleaning filters. Data on the amounts of slag produced, its P_2O_5 content and its solubility for various stages of the steel-melting process are tabulated for a heat in which ore with 7% SiO_2 and pig iron with 0.4% Si were used. The data show that production of slag

Cardl/2

APPROVED FOR RELEASE: 08/31/2001 CIA-RDP86-00513R001654130006-5"

"APPROVED FOR RELEASE: 08/31/2001 CIA-RDP86-00513R001654130006-5

SOV/130-58-8-8/18

Production of Open-hearth Phosphate Slags at the "Azovstal'" Works

with over 10% P_2O_5 amounted to 16.9% of the steel melted. Actual production is considerably less than that calculated after allowing for scrap. The 1956 and 1957 figures for phosphate slag wool were 8.8 and 9.4%, respectively, of steel weight, the corresponding solubility figures being 12.97 and 11.85. The authors list some reasons for these differences. There are 1 figure and 1 table.

Card 2/2

1. Slags--Production 2. Slags--Materials 3. Slags--Production
4. Phosphates--Applications

APPROVED FOR RELEASE: 08/31/2001 CIA-RDP86-00513R001654130006-5"

"APPROVED FOR RELEASE: 08/31/2001 CIA-RDP86-00513R001654130006-5

133-58-4-7/40

AUTHORS: Bul'skiy, M.T., Sviridenko, F.F. and Berilov, N. T., Engineers

TITLE: The Use of Ore Briquettes During Smelting of High Phosphorus Pig Iron (Primeneniye rudnykh briketov pri peredele vysokofosforistykh chugunov)

PERIODICAL: Stal', 1958, Nr 4, pp 303-306 (USSR)

ABSTRACT: On smelting high-phosphorus iron in open hearth furnaces the proportion of silica in slag has an important influence on the dephosphorisation process. The relationship can be expressed by the following empirical equation:

$$(P_2O_5) = \frac{300}{(SiO_2) + 8.1}$$

Statistical analysis of the works' records indicated that about 50 to 60% of total silica in slag was introduced with iron ore. As there was a shortage of low silica lump ore, experiments were carried out on the application for this purpose of briquettes made from low silica, iron rich, dusty ores. Five heats were carried out in which briquettes containing 5% of silica and 64.6% of total iron were used

Card 1/3

APPROVED FOR RELEASE: 08/31/2001 CIA-RDP86-00513R001654130006-5"

"APPROVED FOR RELEASE: 08/31/2001 CIA-RDP86-00513R001654130006-5

133-58-4-7/40

The Use of Ore Briquettes During Smelting of High Phosphorus Pig Iron

and for comparison on the same furnaces, normal heats were carried out in which ore containing 7.2% of silica was used. Main technological indices on both groups of heats are shown in Table 1. A decrease in silica concentration in heats with briquettes increased the concentration of P_2O_5 in slag and decreased the phosphorus concentration in the metal. The duration of the melting period decreased by 20 min., and refining and tapping by 32 min. However, on increasing the intensity of blowing oxygen into the bath to 1250 m^3/hr the increase of concentration of CaO in slag, lags behind the increase in temperature (Fig.3). An increase of limestone to the charge did not increase the lime concentration in slag during the first two hours of the melting period. Therefore, further experiments (8 heats of rail steel and 4 heats of rimming steel) were carried out with briquettes containing limestone (Table 2). Main technological indices for the three corresponding groups of heats are given in Table 3. Mean duration of heat was decreased by 2 hours. Providing briquettes were well heated the formation of slag was very energetic, initial slags had

Card 2/3

APPROVED FOR RELEASE: 08/31/2001 CIA-RDP86-00513R001654130006-5"

"APPROVED FOR RELEASE: 08/31/2001 CIA-RDP86-00513R001654130006-5

133-58-4-7/40

The Use of Ore Briquettes During Smelting of High Phosphorus Pig Iron

high concentrations of CaO and low concentrations of FeO. Under these conditions the bath was blown with oxygen for 1 hour 15 min (1240 m^3/hr). After 3 hours slag contained 38.6% CaO and 18.6% P_2O_5 and the metal only 0.32% of phosphorus (Figs.4 and 5). It is concluded that the use of briquettes from rich ores considerably improves the dephosphorisation process and decreases the duration of the heat. The following participated in the work: A. G. Kotin and Ya. A. Shneyerov, Candidates of Technical Science (Ukrainian Scientific-Research Institute of Metals), Ye. V. Tret'yakov, K.A. Tikhomirova and A.G. Alimov, Engineers and G. N. Oyks, Professor, Doctor of Technical Science.
There are 3 tables and 5 figures.

ASSOCIATION:"Azovstal'" Zavod (Azovstal' Works)

1. Iron--Production 2. Iron ores--Processing 3. Iron ores--Melting
4. Iron ores--Purification 5. Slags--Properties

Card 3/3

APPROVED FOR RELEASE: 08/31/2001 CIA-RDP86-00513R001654130006-5"

"APPROVED FOR RELEASE: 08/31/2001 CIA-RDP86-00513R001654130006-5

SVIRIDENKO, F. F.

133-58-4-8/40

AUTHORS: Raspopov, I. V. Docent and Gorbanev, Ya. S. and Sviridenko, F. F., Engineers

TITLE: The Use of a High Basicity Sinter for Smelting Phosphorus Pig Iron (Primeneniye aglomerata vysokoy osnovnosti pri peredele fosforistykh chugunov)

PERIODICAL: Stal', 1958, Nr 4, pp 306-311 (USSR)

ABSTRACT: The use of a high basicity sinter for the intensification of the process of removal of phosphorus during the melting period was tested in the open hearth melting shop of the Azovstal' Works when smelting rail steel. Chemical composition and size distribution of raw materials used for the production of sinter - Table 1, characteristics of sinter produced under laboratory conditions - Table 2 and that produced under industrial conditions - Table 3 (sinter basicity up to 14.3). Changes in the composition of metal and slag in the course of heat when using high phosphorus iron and fluxed sinter are shown in Fig.3, similar changes when using ore - Fig.1. The comparison of operating indices of open hearth heats carried out with the use of sinter and ore are given in Table 4.

Card 1/2 Conclusions: The production of sinter with a wide range of

APPROVED FOR RELEASE: 08/31/2001 CIA-RDP86-00513R001654130006-5"

"APPROVED FOR RELEASE: 08/31/2001 CIA-RDP86-00513R001654130006-5

133-58-4-8/40

The Use of a High Basicity Sinter for Smelting Phosphorus Pig Iron

fluxing from rich in iron and low-silica materials is possible. The melting temperature of fluxed sinter is considerably lower than the unfluxed sinter and in particular of that of raw ore. The use of highly fluxed sinter during smelting high phosphorus pig iron decreases the duration of the heat on average by one hour, 23 mins, and permits a substantial increase of the concentration of phosphorus in the slag. The increase of the cost of the mineral part of the charge is compensated by the increasing yield of steel. The productivity of open hearth furnaces increases by 9%. The following participated in the work: Professor I. G. Kazantsev, and Engineers: M. T. Bul'skiy, P. N. Slepkanev, A. G. Alimov, Ye. V. Tret'yakov and a research group of the Ukrainian Scientific Research Institute of Metals.
There are 4 tables, 3 figures and 4 references, all of which are Soviet.

ASSOCIATIONS: Zhdanovskiy metallurgicheskiy institut (Zhdanov Metallurgical Institute) and Zavod "Azovstal'" (Azovstal' Works)

Card 2/2

1. Sintered iron--Effectiveness 2. Steel--Manufacture 3. Slags --Properties

APPROVED FOR RELEASE: 08/31/2001 CIA-RDP86-00513R001654130006-5"

"APPROVED FOR RELEASE: 08/31/2001 CIA-RDP86-00513R001654130006-5

SOV/133-58-8-18/30

AUTHORS: Sviridenko, F.F., Popova, A.N. and Fradina, M.G.

TITLE: The Influence of an Increased Arsenic Content on the Ductility of Rail Steel (Vliyaniye povyshennogo soderzhaniya mysh'yaka na koprovuyu vyazkost' rel'sovoy stali)

PERIODICAL: Stal', 1958, Nr 8, pp 739 - 741 (USSR)

ABSTRACT: As the steel manufactured on the "Azovstal'" Works contains up to 0.15% of As, in order to establish the influence of a higher arsenic content on the properties of rails, special rails containing from 0.18 to 0.30% of arsenic were made. Alloying with arsenic was done with arsenic-iron briquettes added to ingot moulds. The composition of steel: C 0.67-0.82, Mn 0.68-0.97, Si 0.16-0.25, S 0.013-0.032, P 0.020-0.038%. All experimental ingots were rolled into rails by the usual technology without encountering any difficulties. The distribution of As content along the length of rails - Table 1; the As content in the rails from top and bottom part of ingots - Table 2; mechanical properties of rails with an increased (A) and normal (B) arsenic content - Tables 3, 4 and 5. It is concluded that an increase of arsenic content from 0.13 to 0.25% has no practical

Card1/2

APPROVED FOR RELEASE: 08/31/2001 CIA-RDP86-00513R001654130006-5"

"APPROVED FOR RELEASE: 08/31/2001 CIA-RDP86-00513R001654130006-5

SOV/133-58-8-18/30

The Influence of an Increased Arsenic Content on the Ductility of Rail Steel

influence on the impact strength of rail specimens on ageing of up to 9 months. There are 5 tables and 2 Soviet references.

ASSOCIATIONS: Zavod "Azovstal'" ("Azovstal'" Works) and Ukrainskiy institut metallov (Ukrainian Institute of Metals)

1. Steel--Mechanical properties 2. Arsenic--Metallurgical effects

Card 2/2

APPROVED FOR RELEASE: 08/31/2001 CIA-RDP86-00513R001654130006-5"

"APPROVED FOR RELEASE: 08/31/2001 CIA-RDP86-00513R001654130006-5

BUL'SKIY, M.T., inzh.; SVIRIDENKO, F.F., inzh.; BIRILOV, N.T., inzh.

Using ore briquets in refining highly-phorphorus pig iron (with summary in English). Stal' 18 no.4:303-306 Ap '58. (MIRA 11:5)

1. Zavod "Azovstal'."
(Open-hearth process) (Briquets)

APPROVED FOR RELEASE: 08/31/2001 CIA-RDP86-00513R001654130006-5"

"APPROVED FOR RELEASE: 08/31/2001 CIA-RDP86-00513R001654130006-5

RASPOPOV, I.V., dots.; GORBANEV, Ya.S., inzh.; SVIRIDENKO, F.F., inzh.

Using high basicity sinters in refining phosphorus pig iron (with summary in English). Stal' 18 no.4:306-311 Ap '58. (MIRA 11:5)

1. Zhdanovskiy metallurgicheskiy institut i zavod "Azovstal'."
(Open-hearth process) (Sintering)

APPROVED FOR RELEASE: 08/31/2001 CIA-RDP86-00513R001654130006-5"

"APPROVED FOR RELEASE: 08/31/2001 CIA-RDP86-00513R001654130006-5

PHASE I BOOK EXPLOITATION SOV/3607

Sviridenko, Fedor Fedorovich, and Nikolay Titovich Berilov

Sovershenstvovaniye tekhnologii proizvodstva stali (Improvement in the Steelmaking Process) [Stalino] Stalinskoye oblastnoye knizhnoye izd-vo, 1959. 64 p. 1,500 copies printed.

Ed.: F. Burlyga; Tech. Ed.: A. Samoletova.

PURPOSE: This booklet is intended for technical personnel in metallurgical plants.

COVERAGE: The book deals with methods and equipment developed and used by the Zhdanov "Azovstal'" Plant for the open-hearth production of steel from phosphorus pig irons. Improved tilting-type furnaces, special-quality charge materials, and the design of a new charging machine are discussed. Several observations on the history of steelmaking are made in the Introduction by Professor K.G. Trubin. There are 8 references, all Soviet.

TABLE OF CONTENTS:

Card 1/3

APPROVED FOR RELEASE: 08/31/2001 CIA-RDP86-00513R001654130006-5"

"APPROVED FOR RELEASE: 08/31/2001 CIA-RDP86-00513R001654130006-5

Improvement in the Steelmaking Process SOV/3607

Introduction 3

General Information on Open-Hearth Furnaces 5

Charge Materials 8

Blasting Cast Iron in the Ladle With an Oxygen-Steam Mixture 15

Pouring of Cast Iron, Draining of Slag, and Addition of Scale 20

Finishing the Heat 22

Deoxidation and Tapping 28

Production of Open-Hearth Phosphate Slags 29

Use of Oxygen for Intensification of the Melting Process 35

Improvement in Design of Individual Sections of the Open-Hearth Furnace 42

Card 2/3

APPROVED FOR RELEASE: 08/31/2001 CIA-RDP86-00513R001654130006-5"

"APPROVED FOR RELEASE: 08/31/2001 CIA-RDP86-00513R001654130006-5

Sviridenko, F.F.

18(0) PHASE I BOOK EXPLOITATION SOV/2125

Tsentral'nyy nauchno-issledovatel'skiy institut chernoy metallurgii. Institut Metallovedeniya i fiziki metallov

Problemy metallovedeniya i fiziki metallov (Problems in Physical Metallurgy and Metallophysics) Moscow, Metallurgizdat, 1959. 540 p. (Series: Its: Sbornik trudov, 6) Errata slip inserted. 3,600 copies printed.

Additional Sponsoring Agency: USSR. Gosudarstvennaya planova komissiya.

Ed. of Publishing House: Ye.N. Berlin; Tech. Ed.: P.G. Islent'yeva; Editorial Board: D.S. Kamenetskaya, B.Ya. Lyubov (Resp. Ed.), Ye.Z. Spektor, L.M. Utevskiy, L.A. Shvartsman, and V.I. Malkin.

PURPOSE: This book is intended for metallurgists, metallurgical engineers, and specialists in the physics of metals.

COVERAGE: The papers in this collection present the results of investigations conducted between 1954 and 1956. Subjects

Card 1/18

covered include crystallization of metals, physical methods of influencing the processes of crystallization, problems in the physical chemistry of metallurgical processes, development of new methods and equipment for investigating metals, and production control. References follow each article.

TABLE OF CONTENTS:

PART I. CRYSTALLIZATION OF METALS

Osipov, A.I., L.A. Shvartsman, V.Ye. Iudin; and M.L. Sazonov. On the Uniform Distribution of a Small Addition in the Slag During the Production of Steel in a 350-ton [Open-hearth] Furnace 318

The distribution process was studied with the use of a radioactive isotope (Ca^{45}). It was shown that the process of diffusion of a substance in slag takes place at a considerably slower rate than in metal.

Shvartsman, L.A., A.I. Osipov, V.I. Alekseyev, V.F. Surov, M.L. Sazonov, M.T. Bul'skiy, S.A. Telesov, A.M. Skrobtsov, A.M. Ofengenden, L.G. Gol'dshteyn, and F.F. Sviridenko. An Investigation of the Kinetics of Scrap Melting in the Scrap-Ore Process 326

A method for determining the speed of melting scrap in an open-hearth furnace in the scrap-ore process was developed on the basis of this investigation. The method is based on "isotopic dilution" using radioactive cobalt. It was shown that the melting speed depends on the duration of the pig iron pouring process and carbon content in the bath.

Stupar', S.N. Investigation of the Transfer of Sulfur from the Gas Phase to the Bath in the Basic Open-hearth Furnace 344

The transfer of sulfur from the gas phase to the bath takes place most intensively during the loading of the metallic portion of the charge. The speed of sulfur absorption during this period is 17-25 percent per hour, during preheating 8-11 percent, and during final melting 3-7.5 percent. Percentage is based on the sulfur content in the metal.

APPROVED FOR RELEASE: 08/31/2001 CIA-RDP86-00513R001654130006-5"

"APPROVED FOR RELEASE: 08/31/2001 CIA-RDP86-00513R001654130006-5

SVIRIDENKO, F.F.

SOV/130-59-1-8/21

AUTHORS: Skoblo S.Ya., Kazachkov Ye.A., Pereverzeva Ye.O., Kiryushkin Yu.I., Strakhov V.O., Sviridenko F.F., Bul'skiy M.I., and Alimov A.O.

TITLE: Quality of a Rail-Steel Ingot weighing 9.75 Tonnes (Kachestvo slitka rel'sovoy stali vesom 9.75 t)

PERIODICAL: Metallurg, 1959, Nr 1, p 19 (USSR)

ABSTRACT: At the "Azovstal'" works rail-steel ingot weight has been increased for 6.6 to 9.75 tonnes to increase casting-pit capacity and improve the utilization of rolling mill capacity. The authors give a brief description of the results of comparative investigations of large and small ingots. The quality was evaluated from sulphur prints of longitudinal ingot sections, from the macro-structure (with deep etching) of transverse strips, differences in the etching of samples from different zones of the ingot and distribution of segregated impurities and non-metallic inclusions in the ingot. Among the conclusions drawn are that the two ingot types are equal in physical,

Card 1/2

structural and chemical heterogeneity, the non-metallic inclusions in the large ingot do not exceed those in a sound 4.0-tonne rail-steel ingot; the amount of non-metallic inclusions, which greatly affect the mechanical properties, can be reduced by careful preparation of runner and ladle.

ASSOCIATION: Zhdanovskiy metallurgicheskiy institut (Zhdanov metallurgical institute) and the "Azovstal'" works

Card 2/2

APPROVED FOR RELEASE: 08/31/2001 CIA-RDP86-00513R001654130006-5"

"APPROVED FOR RELEASE: 08/31/2001 CIA-RDP86-00513R001654130006-5

18(3)

AUTHORS: Kazachkov, Ye. A., Sviridenko, F. F. SOV/163-59-2-7/48

TITLE: The Temperature Conditions of the Tank in the Period of Basic Addition in Dephosphorization (Temperaturnyy rezhim vanny v period dovodki pri fosforistom peredele)

PERIODICAL: Nauchnyye doklady vysshey shkoly. Metallurgiya, 1959, Nr 2, pp 38 - 42 (USSR)

ABSTRACT: In the processing of cast iron with a high phosphorus content, the principal quantity of phosphorus is eliminated from the cast iron during the melting process. The slag produced is poured off, and an admixture of ore, bauxite, lime and scale is added to eliminate the remaining phosphorus. The addition of these large quantities leads to a temperature drop from 1565° to 1525°, as is shown in figure 1, which indicates the average values of 30 measurements. If the temperature was too low before the admixture, an undercooling is generated (Fig 2), the carbon burns too slowly, and the metal becomes inferior in quality, as is proved by the statistic evaluation of 294 rail-steel melts. Figure 3 shows the dependence of the temperature rise on the combustion rate of carbon; figure 4

Card 1/2

APPROVED FOR RELEASE: 08/31/2001 CIA-RDP86-00513R001654130006-5"

"APPROVED FOR RELEASE: 08/31/2001 CIA-RDP86-00513R001654130006-5

The Temperature Conditions of the Tank in the Period of Basic Addition in Dephosphorization SOV/163-59-2-7/48

shows the influence of the thickness of the slag layer on the carbon combustion and the temperature rise. The pouring-off of the slag speeds up the carbon combustion. Although the temperature must not rise too much to avoid a reduction of the P_2O_5, it should nevertheless be kept between 1550 - 1570° in the melting process of rail steel. There are 4 figures and 5 Soviet references.

ASSOCIATION: Zhdanovskiy metallurgicheskiy institut (Zhdanov Metallurgical Institute)

SUBMITTED: September 15, 1958

Card 2/2

APPROVED FOR RELEASE: 08/31/2001 CIA-RDP86-00513R001654130006-5"

"APPROVED FOR RELEASE: 08/31/2001 CIA-RDP86-00513R001654130006-5

S/137/61/000/011/022/123
A060/A101

AUTHORS: Skrebtsov, A. M., Sviridenko, F. F., Kostyuk, V. A., Popova, A. N.

TITLE: Determination of the quantity of nonmetallic impurities in rail steel by the use of radioactive isotopes

PERIODICAL: Referativnyy zhurnal. Metallurgiya, no. 11, 1961, 34, abstract 11V210 (V sb.: "Radioakt. izotopy i yadern. izlucheniya v nar. kh-ve SSSR. v. 3", Moscow, Gostoptekhizdat, 1961, 200 - 202)

TEXT: A study was made of the contamination of metal by exogenous non-metallic impurities falling into the metal from the furnace slag, the shrink-hole charge of the ingot head, the refractory putty of the head extension piece, dust in the steel-pouring ladle, the refractory clog of the steel-pouring tap. Preparations of radioactive isotopes of Ca^{45}, Ba^{131}, Sr^{89}, P^{32} were dissolved in HNO and this solution was used to soak the refractory substances which were being introduced into the metal in the course of tapping or pouring. After the rails were rolled, templets were taken for the radiographic investigation of the presence of nonmetallic impurities. The radiography was carried out on X-ray film XX with exposure-time of 60 days. The contamination by the furnace slag was

Card 1/2

APPROVED FOR RELEASE: 08/31/2001 CIA-RDP86-00513R001654130006-5"

"APPROVED FOR RELEASE: 08/31/2001 CIA-RDP86-00513R001654130006-5

studied with the aid of isotope Sr^{89} in the amount of 300 millicuries, introduced into the furnace during the time of pure ebullition. Dispersed nonmetallic impurities, whose area could not be measured, were discovered in finished rails. The investigation of the possibility of contaminating the steel by putty was carried on by means of isotope Ca^{45} in the quantity of 75 millicuries. Templets were taken of the rails every two meters. In 24 out of the 52 templets nonmetallic impurities were discovered. In all, as result of putty crumbling 9.1% is left in the metal in the form of nonmetallic impurities. In the same manner it was discovered that the shrink-hole charge is absorbed up to the middle of the ingot, and it may remain in the metal in the form of exogenous nonmetallic impurities. It was discovered that 11 - 14% of the refractory powder from the ladle is mechanically "entrapped" in the steel. The mean content of nonmetallic impurities in rail steel is 0.00012 grams per gram of steel, 1 - 2.5% of which quantity consisting of impurities tagged with radioactive isotopes.

Yu. Nechkin

[Abstracter's note: Complete translation]

APPROVED FOR RELEASE: 08/31/2001 CIA-RDP86-00513R001654130006-5"

"APPROVED FOR RELEASE: 08/31/2001 CIA-RDP86-00513R001654130006-5

SVIRIDENKO, F.F., inzh.; POPOVA, A.N., inzh.; FRADINA, M.G., inzh.; CHERNOVA, A.V., inzh.; TARASOVA, L.P., inzh.

Experimental production of 10-ton rail ingots. Stal' 20 no.8:699-701 Ag '60. (MIRA 13:7)

1. Zavod "Azovstal'." (Steel ingots)

APPROVED FOR RELEASE: 08/31/2001 CIA-RDP86-00513R001654130006-5"

"APPROVED FOR RELEASE: 08/31/2001 CIA-RDP86-00513R001654130006-5

BOL'SHAKOV, L.A., kand.tekhn.nauk; BUL'SKIY, M.T., inzh.; TURCHENKOVA, Ye.K., inzh.; YEGNUS, R.M., inzh.; SVIRIDENKO, F.F., inzh.; TARASOVA, L.P., inzh.; SLEPKANEV, P.N., inzh.; GAVRIKOV, V.Z., inzh.

Efficient design of large rail ingot molds. Stal' 20 no.9:793-797 S '60. (MIRA 13:9)

1. Zavod "Azovstal'" i Zhdanovskiy metallurgicheskiy institut.
(Ingot molds)

APPROVED FOR RELEASE: 08/31/2001 CIA-RDP86-00513R001654130006-5"

"APPROVED FOR RELEASE: 08/31/2001 CIA-RDP86-00513R001654130006-5

SHNEYEROV, Ya.A.; LEPORSKIY, V.V.; KAZARNOVSKIY, D.S.; KOTIN, A.G.; KURMANOV, M.I.; SUKACHEV, A.I.; SLADKOSHTEYEV, V.T.; BUL'SKIY, M.T.; SVIRIDENKO, F.F.; SIDEL'KOVSKIY, M.P.; KOZHEVNIKOV, I.Yu., red.; BORODAVKIN, M.L., red. izd-va; ISLENT'YEVA, P.G., tekhn. red.

[Converting phosphorous cast iron in open-hearth furnaces] Peredel fosforistykh chugunov v martenovskikh pechakh. Moskva, Gos. nauchno-tekhn. izd-vo po chernoi i tsvetnoi metallurgii, 1961. 256 p. (MIRA 14:8)

(Open-hearth process)

APPROVED FOR RELEASE: 08/31/2001 CIA-RDP86-00513R001654130006-5"

"APPROVED FOR RELEASE: 08/31/2001 CIA-RDP86-00513R001654130006-5

SVIRIDENKO, F.F.

S/137/62/000/001/005/237
A060/A101

AUTHORS: Bul'skiy, M.T., Val'ter, O.I., Skrebtsov, A.M., Kostyuk, V.A., Sviridenko, F.F., Cherepivskiy, A.A.

TITLE: Use of radioactive isotopes for the investigation of the production technology at the Azovstal' plant

PERIODICAL: Referativnyy zhurnal. Metallurgiya, no. 1, 1962, 6, abstract 1V41 (V sb. "Radioakt. izotopy i yadern. izlucheniya v nar. kh-ve SSSR, v. 3", Moscow, Gostoptekhizdat, 1961, 130 - 132)

TEXT: The authors consider the problem of applying radioactive isotopes in the blast-furnace, open-hearth furnace, rolling practice. The most important researches carried out at the plant were: 1) the study of the operation of open-hearth furnaces when the liquid finishing slag from the preceding heat was left in the furnace; 2) the study of the expediency of using incompletely burned lime instead of limestone in the charge of open-hearth furnaces; 3) the study of the quantity of slag during the pure ebullition period of the vat upon the

Card 1/2

APPROVED FOR RELEASE: 08/31/2001 CIA-RDP86-00513R001654130006-5"

"APPROVED FOR RELEASE: 08/31/2001 CIA-RDP86-00513R001654130006-5

Use of radioactive isotopes ...

S/137/62/000/001/005/237
A060/A101

quality of the steel smelted; 4) the determination of the quantity of exogeneous nonmetallic impurities in rail steel. The utilization of radioactive isotopes for γ-ray defectoscopy is described.

N. Yudina

[Abstracter's note: Complete translation]

Card 2/2

APPROVED FOR RELEASE: 08/31/2001 CIA-RDP86-00513R001654130006-5"

"APPROVED FOR RELEASE: 08/31/2001 CIA-RDP86-00513R001654130006-5

S/130/61/000/005/003/005
A006/A101

AUTHORS: Sviridenko, F. F., Kazachkov, Ye. A., Vasil'kovskaya, N. P., Lesenko, I. I.

TITLE: Riser with an air gap in the wall

PERIODICAL: Metallurg, no. 5, 1961, 15 - 18

TEXT: Risers used at "Azovstal'" for delayed cooling of feed head metal, are lined with chamotte bricks. The lining is 120 mm thick. Heat insulating conditions can be improved by employing insulated bricks, and the best means of insulation for this purpose is air. Investigations were made to use the heat insulating properties of an air gap in the lining of risers. The use of shaped bricks, which is the simplest method employed at the KMK, was not possible at Azovstal' due to the lack of a ceramic shop. Therefore, standard brick dimensions and shapes had to be employed. The existing design of risers was modified by two methods: 1. In the shell of a conventional riser, 8 - 10 mm thick steel sheets were inserted and fastened by electric welding process in such a manner, that an internal shell was formed that was separated from the external shell by a 70 mm wide gap. The gap was lined with chamotte bricks. 2) A special riser was employed with horizontal ribs in the center of the shell height, supporting

Card 1/4

APPROVED FOR RELEASE: 08/31/2001 CIA-RDP86-00513R001654130006-5"

"APPROVED FOR RELEASE: 08/31/2001 CIA-RDP86-00513R001654130006-5

S/130/61/000/005/003/005
A006/A101

Riser with an air gap in the wall

Improved heat insulation reduces the metal volume in the feed head and increases the ingot weight. The upper section of the ingot which is most contaminated with non-metallic impurities, can thus by cut off. Experimental castings made with the new risers showed satisfactory results. However, their large-scale production was impeded by the low stability of the lining. Therefore, a new variant of the risers was designed (Figure 3) where the uniform suspension of the ingot over the whole perimeter of the mold and riser butt line, is assured by an excess of the cross section of the riser (885 x 790) over that of the mold (865 x 770). Grooves, 50 mm wide, in the riser shell prevent the falling out of the upper rows of the lining, and 50 mm - diameter apertures are provided in the walls for the elimination of gases from internal cavities. Experiments showed that risers lined with straight bricks were not less stable than those lined with shaped bricks. Their use will reduce rejects due to contaminations with non-metallic impurities. There are 3 figures.

ASSOCIATION: Zavod "Azovstal'" (Azovstal' Plant); Zhdanovskiy metallurgicheskiy institut (Zhdanov Metallurgical Institute).

Card 3/4

"APPROVED FOR RELEASE: 08/31/2001 CIA-RDP86-00513R001654130006-5

KAZARNOVSKIY, D.S.; DYUBIN, N.P.; GERSHGORN, M.A.; KRAVTSOVA, I.P.; KLIMOV, K.N.; RUDOL'SKIY, N.L.; FRADIN, M.D.; SVIRIDENKO, F.F.; FRADINA, M.G.; ZANNES, A.N.; CHERNOVA, A.V.

Experimental railroad rails made of chromium-nickel native alloy steel. Stal' 22 no.6:548-550 Je '62. (MIRA 16:7)

1. Ukrainskiy nauchno-issledovatel'skiy institut metallov i zavod "Azovstal'".
(Chromium-nickel steel)
(Railroads--Rails)

APPROVED FOR RELEASE: 08/31/2001 CIA-RDP86-00513R001654130006-5"

"APPROVED FOR RELEASE: 08/31/2001 CIA-RDP86-00513R001654130006-5

SVIRIDENKO, F.F.; KIRYUSHKIN, Yu.I.; KAZACHKOV, Ye.A.; LESENKO, I.I.

Riser head with a two-layer lining. Metallurg 8 no.2:20 F '63. (MIRA 16:2)

1. Azovskiy staleplavil'nyy zavod im. Sergo Ordzhonikidze v Zhdanove i Zhdanovskiy metallurgicheskiy institut.
(Steel ingots)

APPROVED FOR RELEASE: 08/31/2001 CIA-RDP86-00513R001654130006-5"

"APPROVED FOR RELEASE: 08/31/2001 CIA-RDP86-00513R001654130006-5

SVIRIDENKO, F.F., inzh.; KRIVENKO, P.T., inzh.; VISTOROVSKIY, N.T., inzh.

Characteristics of the procedure for converting phosphorous pig iron in redesigned open-hearth furnaces operating on natural gas. Stal' 23 no.8:700-704 Ag '63. (MIRA 16:9)
(Steel--Metallurgy)
(Open-hearth furnaces--Design and construction)

APPROVED FOR RELEASE: 08/31/2001 CIA-RDP86-00513R001654130006-5"

"APPROVED FOR RELEASE: 08/31/2001 CIA-RDP86-00513R001654130006-5

LEPORSKIY, V.V., inzh.; BUL'SKIY, M.T., inzh. [deceased]; SVIRIDENKO, F.F., inzh.; VISTOROVSKIY, N.T., inzh.

Rapid filling of the riser-head part of ingots. Stal' 23 no.8: 705-706 Ag '63. (MIRA 16:9)

1. Metallurgicheskiy zavod "Azovstal'."
(Steel ingots)

APPROVED FOR RELEASE: 08/31/2001 CIA-RDP86-00513R001654130006-5"

"APPROVED FOR RELEASE: 08/31/2001 CIA-RDP86-00513R001654130006-5

BOL'SHAKOV, L.A., kand.tekhn.nauk; YEGNUS, R.M., inzh.; SVIRIDENKO, F.F., inzh.; BALABANOV, A.Kh., inzh.

Effectiveness in the use of lightweight, solid-bottom ingot molds. Stal' 23 no.8:712-713 Ag '63. (MIRA 16:9)

1. Zhdanovskiy metallurgicheskiy institut i metallurgicheskiy zavod "Azovstal'".

(Ingot molds)

APPROVED FOR RELEASE: 08/31/2001 CIA-RDP86-00513R001654130006-5"

"APPROVED FOR RELEASE: 08/31/2001 CIA-RDP86-00513R001654130006-5

TARASOVA, L.P., inzh.; KALASHNIKOV, A.G., inzh.; DOLINENKO, O.V., inzh.; NAZARENKO, Ye.T., inzh.; BUL'SKIY, M.T., inzh. [deceased]; SVIRIDENKO, F.F., inzh.; Prinimali uchastiye: LAPINA, A.M., inzh.; KORNIYENKO, D.I., inzh.

Nonmetallic inclusions in rail steel. Stal' 23 no.8:738-740 Ag '63. (MIRA 16:9)

(Railroads--Rails) (Steel--Inclusions)

APPROVED FOR RELEASE: 08/31/2001 CIA-RDP86-00513R001654130006-5"

"APPROVED FOR RELEASE: 08/31/2001 CIA-RDP86-00513R001654130006-5

KAZACHKOV, Ye.A.; KIRYUSHKIN, Yu.I.; SKOBLO, S.Ya.; BUL'SKIY, M.T. [deceased]; SVIRIDENKO, F.F.; SAPELKIN, N.F.

Formation and heterogeneity of rail ingots cast in ingot molds with a varying wall thickness. Izv. vys. ucheb. zav.; chern. met. 7 no.11:75-80 '64. (MIRA 17:12)

1. Zhdanovskiy metallurgicheskiy institut.

APPROVED FOR RELEASE: 08/31/2001 CIA-RDP86-00513R001654130006-5"

"APPROVED FOR RELEASE: 08/31/2001 CIA-RDP86-00513R001654130006-5

DERFEL', A.G.; KRAVTSOVA, I.P.; DYUBIN, N.P.; SVIRIDENKO, F.F.; POPOVA, A.N.; DOLINENKO, O.V.; SHAROV, B.A.; Prinimali uchastiye: DYUBINA, A.V.; TARASOVA, L.P.; LESENKO, I.I.; LEVCHENKO, N.D.; BONDARENKO, A.V.

Using ferrotitanium for the deoxidation of rail steel and its properties. Sbor. trud. UNIIM no.11:365-378 '65. (MIRA 18:11)

APPROVED FOR RELEASE: 08/31/2001 CIA-RDP86-00513R001654130006-5"

"APPROVED FOR RELEASE: 08/31/2001 CIA-RDP86-00513R001654130006-5

KAZARNOVSKIY, D.S., doktor tekhn. nauk; GERSHGORN, M.A., inzh.; SVIRIDENKO, F.F., inzh.; KRAVTSOVA, I.P., inzh.; SHNAPERMAN, L.Ya., inzh.

Development, adoption, and introduction of a low-alloy steel for heavy type railroad rails. Stal' 25 no.4:355-357 Ap '65. (MIRA 18:11)

1. Ukrainskiy nauchno-issledovatel'skiy institut metallov i zavod "Azovstal'".

APPROVED FOR RELEASE: 08/31/2001 CIA-RDP86-00513R001654130006-5"

"APPROVED FOR RELEASE: 08/31/2001 CIA-RDP86-00513R001654130006-5

DYUBIN, N.P.; DYUBINA, A.V.; SVIRIDENKO, F.F.; KARPUNIN, A.M.; Prinimali uchastiye: LEVCHENKO, N.D.; POPOVA, N.N.; TROFIMOV, V.V.; SHUBENKO, G.L.; CHETVERIKOV, A.V.; RYABININ, N.G.; ZEMLYANSKAYA, L.I.; FRADINA, M.G.; ORGIYAN, V.S.; SABUTSKIY, F.M.; MOMGELI, A.V.; BUL'SKIY, M.T.; FRADIN, M.D.; VALENKO, N.S.; KUCHERYAVYY, Yu.P.; CHEPELEV, P.M.; SABUROV, T.A.; POLYAKOV, P.M.; MALASHENKO, R.B.

Effect of the temperature of rail rolling on their quality. (MIRA 18:11)
Sbor. trud. UNIIM no.11:344-353 '65.

APPROVED FOR RELEASE: 08/31/2001 CIA-RDP86-00513R001654130006-5"

"APPROVED FOR RELEASE: 08/31/2001 CIA-RDP86-00513R001654130006-5

GERSHGORN, M.A.; SVIRIDENKO, F.F.; KAZARNOVSKIY, D.S.; KRAVTSOVA, I.P.; POPOVA, A.N.; FRADINA, M.G.; Prinimali uchastiye: LUKASHOV, G.G.; RUDOL'SKIY, N.L.; SLEPKANEV, N.P.; PLISKANOVSKIY, S.T.; GORBANEV, Ya.S.; BUL'SKIY, M.T. [deceased]; ARKHANGEL'SKIY, Yu.N.; SHAROV, B.A.; VISTOROVSKIY, N.T.; RAKHANSKIY, B.I.; SAPOZHKOV, V.Ye.; RYABININ, N.G.; KARAKULINA, R.R.; FADEYEVA, A.M.; ZVEREV, D.A.

Improving the production of high-strength rails by alloying them with granulated ferrochromium in the ladle. Stal' 25 no.5:408-411 My '65. (MIRA 18:6)

1. Ukrainskiy nauchno-issledovatel'skiy institut metallov i zavod "Azovstal'".

APPROVED FOR RELEASE: 08/31/2001 CIA-RDP86-00513R001654130006-5"

"APPROVED FOR RELEASE: 08/31/2001 CIA-RDP86-00513R001654130006-5

SVIRIDENKO, G.; TONKOV, A.A., kapitan 2 ranga, redaktor; KAZAKOVA, V.Ye., tekhnicheskiy redaktor

[Love the sea and service in the navy] Liubite more i voenno-morskuiu sluzhbu. Moskva, Voen. izd-vo Ministerstva oborony SSSR, 1954. 125 p. (MLRA 8:7)
(Russia--Navy)

APPROVED FOR RELEASE: 08/31/2001 CIA-RDP86-00513R001654130006-5"

"APPROVED FOR RELEASE: 08/31/2001 CIA-RDP86-00513R001654130006-5

SVIRIDENKO, G.

Organize the trade serving the workers and passengers in rail transportation. Sov.torg.no.1:46-47 Ja '57. (MLRA 10:2)

1. Nachal'nik Ursa L'vovskoy zheleznoy dorogi.
(Retail trade) (Railroads--Passenger service)

APPROVED FOR RELEASE: 08/31/2001 CIA-RDP86-00513R001654130006-5"

"APPROVED FOR RELEASE: 08/31/2001 CIA-RDP86-00513R001654130006-5

SVIRIDENKO, I., inzh.

Weakening the field of traction motors with series excitations. Zhil-komm. khoz. 9 no.3:15-16 '59. (MIRA 12:5)
(Electric motors) (Street-railways)

APPROVED FOR RELEASE: 08/31/2001 CIA-RDP86-00513R001654130006-5"

"APPROVED FOR RELEASE: 08/31/2001 CIA-RDP86-00513R001654130006-5

84231

S/089/60/009/004/011/020
B006/B070

11.9200

AUTHORS: Subbotin, V. I., Ushakov, P. A., Sviridenko, I. P.

TITLE: Investigation of Heat Exchange in a Turbulent Flow of Mercury in an Annular Gap

PERIODICAL: Atomnaya energiya, 1960, Vol. 9, No. 4, pp. 310 - 312

TEXT: The authors of the present "Letter to the Editor" studied the heat transfer to mercury flowing turbulently in a narrow annular gap. In the introduction, the experimental apparatus, which was made of carbon steel, is described, and the experimental dimensions are given. Temperature was measured by thermocouples. The experiments were made for a flow velocity of mercury of between 0.3 and 3.8 m/sec at temperatures 30 - 40°C, and a heat flow q of $25 \cdot 10^{-3}$ to $75 \cdot 10^{3}$ kcal/m^2·hour. The heat-transfer coefficients were measured after their stabilization along the channel. The maximum error in the heat-transfer measurement for the second experimental dimensions (400 mm long, gap width 2 mm) was 16 and 30%, respectively, for one- and two-sided heating. The accuracy for the first

Card 1/3

APPROVED FOR RELEASE: 08/31/2001 CIA-RDP86-00513R001654130006-5"

"APPROVED FOR RELEASE: 08/31/2001 CIA-RDP86-00513R001654130006-5

84231

Investigation of Heat Exchange in a Turbulent Flow of Mercury in an Annular Gap

S/089/60/009/004/011/020
B006/B070

experimental dimensions (1,000 mm, gap width 1 mm) was somewhat lower. The experiments showed first that the flextures of the inner tube ($d_2/d_1=1.05$) had a significant effect on the temperature field. This shows that in designing heat exchangers the effect of channel deformations may not be neglected. The most important results were obtained for the second experimental dimensions for which channel deformations could be practically excluded. Fig. 1 shows the temperature distribution along the gap for $q = 50 \cdot 10^3 kcal/m^2 \cdot hour$; Fig. 2 shows a comparison between the experimental results and calculations according to semi-empirical formulas; Fig. 3 gives a comparison of the experimental results by the present authors with the experimental results of other authors. The experimental results are summarized as follows: 1) For two-sided heating of a gap with $d_2/d_1 \leq 1.09$ and for equality of the heat flows from both heat-emitting surfaces to the mercury, the heat transfer is about double as much as for a one-sided heating (Fig. 2). Therefore, the use of the hydraulic diameter d_h as a characteristic dimension does not automatically take into account the specialities of heat transfer to liquid metals for a

Card 2/3

APPROVED FOR RELEASE: 08/31/2001 CIA-RDP86-00513R001654130006-5"

"APPROVED FOR RELEASE: 08/31/2001 CIA-RDP86-00513R001654130006-5

USHAKOV, P.A.; SUBBOTIN, V.I.; GABRIANOVICH, B.N.; TALANOV, V.D.; SVIRIDENKO, I.P.

Heat transfer and hydraulic resistance of close-packed bundles of rods arranged in-line. Atom. energ. 13 no.2:162-169 Ag '62. (MIRA 15:8)

(Heat--Transmission) (Nuclear reactors)

APPROVED FOR RELEASE: 08/31/2001 CIA-RDP86-00513R001654130006-5"

"APPROVED FOR RELEASE: 08/31/2001 CIA-RDP86-00513R001654130006-5

SVIRIDENKO, I.P.

AID Nr. 987-3 11 June

HEAT TRANSFER OF LIQUID METALS IN PIPE FLOW (USSR)

Subbotin, V. I., P. A. Ushakov, B. N. Gabrianovich, V. D. Talanov, and I. P. Sviridenko. Inzhenerno-fizicheskiy zhurnal, v. 6, no. 4, Apr 1963, 16-21.
S/170/63/000/004/002/017

The Physics and Power Engineering Institute in Obninsk studied heat transfer from Hg at 18 to 60°C and from NaK alloy (22% Na, 78% K) at 70 to 110°C. Three test sections were used. The first consisted of a polished steel tube (20-mm diameter, 0.3-mm wall thickness) to which copper rings (43-mm diameter) were welded at 1-mm intervals. The thermocouples were located inside the copper rings. The second section contained a nickel tube (12-mm diameter, 0.4-mm wall thickness) also equipped with copper rings. The third section consisted of a machined copper tube with a 40-mm outer and a 20.8-mm inner diameter. Two series of experiments were conducted with NaK: 1) at $470 < Pe < 7900$, with oxide contents in the metal ranging from $3 \cdot 10^{-4}$ to $7 \cdot 10^{-4}$ wt %; 2) at $107 < Pe < 640$, with oxide contents of $1 \cdot 10^{-3}$ to $5.2 \cdot 10^{-3}$ wt %. The results showed that the Nusselt number for Hg in nickel and steel tubes and for NaK in copper tubes is identical. This indicates

Card 1/2

APPROVED FOR RELEASE: 08/31/2001 CIA-RDP86-00513R001654130006-5"

"APPROVED FOR RELEASE: 08/31/2001 CIA-RDP86-00513R001654130006-5

AID Nr. 987-31 11 June

HEAT TRANSFER OF LIQUID METALS IN PIPE FLOW [Cont'd] S/170/63/000/004/002/017

that thermal contact resistance is practically absent under the conditions studied. Oxides in concentrations from $3 \cdot 10^{-4}$ to $5 \cdot 10^{-3}$ wt % did not affect heat transfer in NaK. The following formula is recommended at $0.002 \ll Pr \ll 0.003$ and $20 \ll Pe \ll 1000$ for metals containing oxides in concentrations below the solubility limit: $Nu \approx 4.3 + 0.025\, Pe^{0.8}$. [PV]

Card 2/2

APPROVED FOR RELEASE: 08/31/2001 CIA-RDP86-00513R001654130006-5"

"APPROVED FOR RELEASE: 08/31/2001 CIA-RDP86-00513R001654130006-5

SVI[illegible]KO, I.S., Cand Tech Sci--(diss) "Study of methods of ~~reduction~~ elevation of the field of electric traction engines of consecutive excitation in urban electric transport." Mos, 1959. 15 pp (Academy of Communal Economy im K.D. Pan[illegible]lov), 150 copies (KL,29-59, 129)

-35-

APPROVED FOR RELEASE: 08/31/2001 CIA-RDP86-00513R001654130006-5"

"APPROVED FOR RELEASE: 08/31/2001 CIA-RDP86-00513R001654130006-5

YAKOVLEV, A.I.; SVIRIDENKO, I.S.; AKSENOV, M.I.

Testing new streetcars and trolley buses. Sbor.nauch.rab.AKKH no.13:138-146 '62. (MIRA 16:4)
(Streetcars—Testing) (Trolley buses—Testing)

APPROVED FOR RELEASE: 08/31/2001 CIA-RDP86-00513R001654130006-5"

"APPROVED FOR RELEASE: 08/31/2001 CIA-RDP86-00513R001654130006-5

YAKOVLEV, A. I., kand. tekhn. nauk; SVIRIDENKO, I. S., kand. tekhn. nauk; KOZLOVSKIY, A. B.

Characteristics of the performance of power transmissions in case of a joint and separate electric drive. Avt. prom. 29 no.5:31-33 My '63. (MIRA 16:4)

1. Gosudarstvennyy soyuznyy ordena Trudovogo Krasnogo Znameni nauchno-issledovatel'skiy avtomobil'nyy i avtomotornyy institut i Akademiya kommunal'nogo khozyaystva.

(Motor vehicles—Power transmissions)
(Electric driving)

APPROVED FOR RELEASE: 08/31/2001 CIA-RDP86-00513R001654130006-5"

"APPROVED FOR RELEASE: 08/31/2001 CIA-RDP86-00513R001654130006-5

SVIRIDENKO, Kim Ivanovich; CHMIL', L.N., red.

[Working time, working area] Rabochee vremia, rabochee mesto. Khar'kov, Khar'kovskoe knizhnoe izd-vo, 1963. 19 p. (MIRA 17:9)

1. Master smeny kommunisticheskogo truda Khar'kovskogo traktornogo zavoda imeni Ordzhonikidze (for Sviridenko).

APPROVED FOR RELEASE: 08/31/2001 CIA-RDP86-00513R001654130006-5"

"APPROVED FOR RELEASE: 08/31/2001 CIA-RDP86-00513R001654130006-5

SAPKO, A.I.; SVIRIDENKO, L.G.; DOBROV, V.P.; GIADKIY, D.F.; BUZUNOV, I.S.; PICHAK, G.V.

Remote control of steel-pouring ladle plugs. Metallurg 7 no.6:18-21 Je '62. (MIRA 15:7)

1. Dnepropetrovskiy metallurgicheskiy institut i Dnepropetrovskiy staleplavil'nyy zavod vysokokachestvennykh i spetsial'nykh staley.

(Electric furnaces--Equipment and supplies)
(Remote control)

APPROVED FOR RELEASE: 08/31/2001 CIA-RDP86-00513R001654130006-5"

"APPROVED FOR RELEASE: 08/31/2001 CIA-RDP86-00513R001654130006-5

PEKKI, A.S.; SVIRIDENKO, L.F.

New source of quartz-feldspar raw materials in Karelia. Stek. i ker. 22 no.4:10-11 Ap '65. (MIRA 18:5)

1. Institut geologii, Petrozavodsk.

APPROVED FOR RELEASE: 08/31/2001 CIA-RDP86-00513R001654130006-5"

"APPROVED FOR RELEASE: 08/31/2001 CIA-RDP86-00513R001654130006-5

SVIRIDENKO, L.P.

Stages and structure of the rapakivi granite massif in the Salmi region. Sov.geol. 8 no.10:38-49 O '65. (MIRA 18:12)

1. Institut geologii, Petrozavodsk.

APPROVED FOR RELEASE: 08/31/2001 CIA-RDP86-00513R001654130006-5"

"APPROVED FOR RELEASE: 08/31/2001 CIA-RDP86-00513R001654130006-5

IVANOV, Stepan Stepanovich; IVANOV, A.P., inzh.-kapitan 2 ranga, red.; SVIRIDENKO, L.V., inzh.-kapitan 2 ranga, red.; BUKOVSKAYA, N.A., tekhn. red.

[The submarine] Podvodnaia lodka. Moskva, Voen.izd-vo M-va obor. SSSR, 1961. 116 p. (MIRA 14:12)

(Submarine boats)

APPROVED FOR RELEASE: 08/31/2001 CIA-RDP86-00513R001654130006-5"

"APPROVED FOR RELEASE: 08/31/2001 CIA-RDP86-00513R001654130006-5

SERGIYEV, P.G.; NABOKOV, V.A.; LARYUKHIN, M.A.; SVIRIDENKO, M.A.

A knapsack sprayer developed by P.G. Sergiev and V.M. Nabokov ("Serna-4"). Med.paraz. i paraz.bol. 27 no.6:693-695 N-D '58. (MIRA 12:2)

1. Iz sektora profilaktiki infektsiy Instituta malyarii, meditsinskoy parazitologii i gel'mintologii Ministerstva zdravookhraneniya SSSR (dir. instituta - prof. P.G. Sergiyev, zav. sektorom - prof. V.A. Nabokov).

(INSECTICIDES,
portable sprayer (Rus))

APPROVED FOR RELEASE: 08/31/2001 CIA-RDP86-00513R001654130006-5"

"APPROVED FOR RELEASE: 08/31/2001 CIA-RDP86-00513R001654130006-5

NABOKOV, V.A.; MITROFANOV, A.M.; SVIRIDENKO, N.A.

Modernized disinfecting apparatus of the LSD type and results of testing it. Med.paraz.i paraz.bol. no.3:318-322 '61. (MIRA 14:9)

1. Iz otdela entomotoksikologii i dezinsektsii Instituta meditsinskoy parazitologii i tropicheskoy meditsiny imeni Ye.I. Martsinovskogo Ministerstva zdravookhraneniya SSSR (dir. instituta - prof. P.G. Sergiyev, zav. otdelom - prof. V.A. Nabokov).
(DISINFECTION AND DISINFECTANTS--EQUIPMENT AND SUPPLIES)

APPROVED FOR RELEASE: 08/31/2001 CIA-RDP86-00513R001654130006-5"

"APPROVED FOR RELEASE: 08/31/2001 CIA-RDP86-00513R001654130006-5

SVIRIDENKO, N., inzh.

Is everything all right in the organization of correspondence courses? Mias.ind.SSSR 31 no.2:35 '60. (MIRA 13:8)

1. Minskiy myasotrest.
(Moscow--Food industry--Study and teaching)

APPROVED FOR RELEASE: 08/31/2001 CIA-RDP86-00513R001654130006-5"

"APPROVED FOR RELEASE: 08/31/2001 CIA-RDP86-00513R001654130006-5

ACC NR: AP6021792 (A, N) SOURCE CODE: UR/0413/66/000/012/0057/0057

INVENTORS: Gavrilov, I. V.; Sviridenko, N. N.; Trubetskov, L. V.

ORG: none

TITLE: A device for the grid protection of an ion converter. Class 21, No. 182793

SOURCE: Izobreteniya, promyshlennyye obraztsy, tovarnyye znaki, no. 12, 1966, 57

TOPIC TAGS: ionization detector, electron tube grid, electronic circuit

ABSTRACT: This Author Certificate presents a device for the grid protection of an ion converter with automatic repetitive triggering. The device contains thyristors and includes sensing elements of the arcing back- and overload-sensing gauges using magnetic elements. The design increases the reliability and response time of the device. Of its three thyristors, one is connected through separating diodes between the converter grids and the negative terminal of the bias voltage source (see Fig. 1). Two other thyristors are connected by anodes to the converter grids through separating diodes and grid resistances. These two thyristors are connected by the cathodes to the zero output of the grid control system. A stabilitron tube is included in the cathode circuit of the first thyristor. Two delay elements (RC circuits) are connected between the anode and cathode of the stabilitron tube. The effective resistances of the RC circuits are regulated and are shunted by diodes. The diodes are connected by the anodes to the cathodes of the stabilitron tube and the thyristors. These diodes

Card 1/2 UDC: 621.316.9:621.314.58

APPROVED FOR RELEASE: 08/31/2001 CIA-RDP86-00513R001654130006-5"

"APPROVED FOR RELEASE: 08/31/2001 CIA-RDP86-00513R001654130006-5

ACC NR: AP6021792

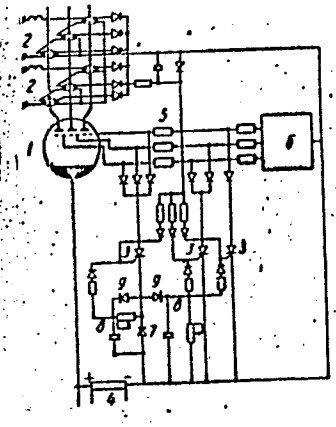

Fig. 1. 1 - ion converter; 2 - sensing element; 3 - thyristors; 4 - bias voltage source; 5 - grid resistances; 6 - grid control system; 7 - stabilitron tube; 8 - delay elements; 9 - diodes

are connected by cathodes to the common points of the capacitors and resistances of the RC circuits. The control electrode of the first thyristor is connected through a diode and resistance to the common point of one RC circuit. The control electrodes of the other two thyristors are connected to the common point of the other circuits. Orig. art. has: 1 figure.

SUB CODE: 09, 14/ SUBM DATE: 28Apr65

Card 2/2

APPROVED FOR RELEASE: 08/31/2001 CIA-RDP86-00513R001654130006-5"

"APPROVED FOR RELEASE: 08/31/2001 CIA-RDP86-00513R001654130006-5

88693

9.2000 (1001, 1024, 1331)

S/058/60/000/010/002/014
A001/A001

Translation from: Referativnyy zhurnal, Fizika, 1960, No. 10, pp. 251-252, # 26995

AUTHORS: Kolomoytsev, F.I., Yakunin, A.Ya., Sviridenko, O.N.

TITLE: Measurements of Electromotive Forces Induced in Dielectrics Irradiated by X-Rays

PERIODICAL: Nauchn. zap. Dnepropetr. un-t, 1957, Vol. 72, pp. 3 - 6

TEXT: The authors measured emf $\mathcal{E}$ induced in polyethylene insulation by X-ray irradiation (voltage in a X-ray tube was 48 kv, current was 12 ma). The temperature course of emf was established within the range of temperatures from -30 to + 70°C; it obeys the law: $\mathcal{E} = A \exp(u/kT)$, where $u = 0.5$ ev, $A = 1.7 \times 10^{-7}$ v is a constant. At a temperature of -30°C the $\mathcal{E}$-value attains $\sim 10^3$ v. The temperature dependence of polyethylene electric conductivity was measured for the cases when an external voltage is of the same or the opposite sign to that of induced $\mathcal{E}$, as well as the temperature dependence of dark electrical conductivity. It follows

Card 1/2

APPROVED FOR RELEASE: 08/31/2001 CIA-RDP86-00513R001654130006-5"

"APPROVED FOR RELEASE: 08/31/2001 CIA-RDP86-00513R001654130006-5

88693

S/058/60/000/010/002/014
A001/A001

Measurements of Electromotive Forces Induced in Dielectrics Irradiated by X-Rays

from the slope of the curves that the activation energy of dark carriers is higher than that of the induced ones. All the curves blend with the rising temperature, which indicates the lowering of the excitation effect at high temperatures.

A.Zh.

Translator's note: This is the full translation of the original Russian abstract.

Card 2/2

APPROVED FOR RELEASE: 08/31/2001 CIA-RDP86-00513R001654130006-5"

"APPROVED FOR RELEASE: 08/31/2001 CIA-RDP86-00513R001654130006-5

SVIRIDENKO, P.A.

B 64
e

SA

1638

621.313.32 ; 621.3.012

Characteristics of saturated synchronous machines. Sviridenko, P. A. C.R. (Doklady) Acad. Sci. URSS, 35, 6, pp. 172-176, 1942. - An analytical study of the characteristics of the salient-pole machine, in which allowance is made for magnetic saturation. A vector diagram is constructed, from which expressions for the main characteristics are deduced. In the case of the excitation current, the calculated value was found to be within 3.5% of the experimental value. Various conclusions are drawn concerning the conditions for saturation of a synchronous machine, and the characteristics of a saturated machine. A.E.T.

ASM-SLA METALLURGICAL LITERATURE CLASSIFICATION

APPROVED FOR RELEASE: 08/31/2001 CIA-RDP86-00513R001654130006-5"

"APPROVED FOR RELEASE: 08/31/2001 CIA-RDP86-00513R001654130006-5

SVIRIDENKO, P.A.

SHENFER, KLAVDII IPPOLITOVICH, and P.A. SVIRIDENKO

Rekuperatsiia energii aviatsionnykh dvigatelei pri ikh ispytanii. (Akademiia Nauk SSSR. Izvestiia. Otdelenie tekhnicheskikh nauk, 1943, no. 5-6, p. 29-36, tables, diagrs.)

Title tr.: Energy recovery from aircraft engines in bench tests.

AS262.A6244 1943

SO: Aeronautical Sciences and Aviation in the Soviet Union, Library of Congress, 1955

APPROVED FOR RELEASE: 08/31/2001 CIA-RDP86-00513R001654130006-5"

"APPROVED FOR RELEASE: 08/31/2001 CIA-RDP86-00513R001654130006-5

SVIRIDENKO, P. A.

"Utilization of Energy of Internal Combustion Engines in Their Testing," Dokl. AN SSSR, 39, No.9, 1943

Energetics Inst. im. Krzhizhinovskiy, AS USSR

APPROVED FOR RELEASE: 08/31/2001 CIA-RDP86-00513R001654130006-5"

"APPROVED FOR RELEASE: 08/31/2001 CIA-RDP86-00513R001654130006-5

SVIRIDENKO, P. A.

"Analysis of Transients in a Brush-Shifting A.C. Machine," Dokl. AN SSSR, 42, No3. 1,2, 1943

Energetics Inst. im. Krzhizhinovskiy, AS USSR

APPROVED FOR RELEASE: 08/31/2001 CIA-RDP86-00513R001654130006-5"

"APPROVED FOR RELEASE: 08/31/2001 CIA-RDP86-00513R001654130006-5

SVIRIDENKO, P.A.

SA

B 64
o
665

621.313.33 : 621.3.015.3 = 82

Theory of the transient phenomena of asynchronous machines. Sviridenko, P. A. Bull. Acad. Sci. USSR, Dep. Tech. Sci., No. 3, pp. 141-148, 1944. - From a theoretical analysis of the asynchronous machine an expression is developed for the determination of transient currents when the rotor speed can be considered constant. The method is applicable both to symmetrical and asymmetrical operation. E. R. A.

ASM-SLA METALLURGICAL LITERATURE CLASSIFICATION

APPROVED FOR RELEASE: 08/31/2001 CIA-RDP86-00513R001654130006-5"

"APPROVED FOR RELEASE: 08/31/2001 CIA-RDP86-00513R001654130006-5

SVIRIDENKO, P. A.

"Stable Speeds of Rotation of an Asynchronous Machine With Single-Phase Stator and Rotor," Dokl. AN SSSR, 46, No.1, 1945

Energetics Inst. im. Krzhizhinovskiy, AS USSR

APPROVED FOR RELEASE: 08/31/2001 CIA-RDP86-00513R001654130006-5"

"APPROVED FOR RELEASE: 08/31/2001 CIA-RDP86-00513R001654130006-5

SVIRIDENKO, P. A.

"Substitution Diagrams for Transient Regimes of Asynchronous Electric Machines," Dokl. AN SSSR, 48, No.6, 1945.

Energetics Inst. im. Krzhizhinovskiy, AS USSR

APPROVED FOR RELEASE: 08/31/2001 CIA-RDP86-00513R001654130006-5"

"APPROVED FOR RELEASE: 08/31/2001 CIA-RDP86-00513R001654130006-5

SVIRIDENKO, P.A.

SVIRIDENKO, P. A.

Sviridenko, P. A. defended his Doctor's dissertation in the Power Engineering Institute im Krzhizhanovskiy, USSR, on 14 March 1946, for the academic degree of Doctor of Technical Sciences.

Dissertation: "Operating Conditions of Induction Machines with Variable Parameters". Resume: A circuit is given for a cascade induction generator to generate power for a network at constant voltge and frequency when the speed of the prime mover varies.

Official Opponents: Profs. D. A. Gorodskiy, Yu. S. Chechet, and A. N. Larionov (all Doctors of Technical Sciences).

SO: Elektrichestvo, No. 7, Moscow, August 1953, pp 87-92 (W/29844, 16 Apr 54)

APPROVED FOR RELEASE: 08/31/2001 CIA-RDP86-00513R001654130006-5"

"APPROVED FOR RELEASE: 08/31/2001 CIA-RDP86-00513R001654130006-5

PROCESSES AND PROPERTIES INDEX

SVIRIDENKO, P.A.

S A

B 64
C

621.313.333.025.1

3112. **Application of the theory of rotating fields to the analysis of asynchronous machines with 1-phase stators and rotors.** SVIRIDENKO, P. A. *Elektrichestvo* (No. 7) 67-70 (*July*, 1948) *In Russian.*—The analysis of the asynchronous machine with bilateral dissymmetry is a difficult problem which is little treated in the usual theory of machines. Using the Ferraris principle, in which the pulsating fields of the 1-ph. stator and rotor windings are resolved into oppositely-moving rotating fields, the paper shows that the currents and voltages in the windings have the series of frequencies given by $f_n = [n - (n - 1)]f$, where n takes all odd values for the stator and all even values, including zero, for the rotor. The method is used to develop equivalent ladder networks for the stator and rotor of an asynchronous generator with capacitive self-excitation, the conclusions being illustrated by oscillograms. B. H.

ASM-SLA METALLURGICAL LITERATURE CLASSIFICATION

APPROVED FOR RELEASE: 08/31/2001 CIA-RDP86-00513R001654130006-5"

"APPROVED FOR RELEASE: 08/31/2001 CIA-RDP86-00513R001654130006-5

NIKITIN, Gennadiy Mikhaylovich; SVIRIDENKO, P.A., prof., doktor tekhn. nauk, retsenzent; MURATOV, I.I., dotsent, kand.tekhn.nauk, retsenzent; AL'TSHULLER, T.S., red.; VOLCHOK, K.M., tekhn.red.

[Electric drives for ship machinery] Sudovye elektroprivody. Leningrad, Izd-vo "Rechnoi transport," Leningr.otd-nie, 1960. 395 p. (MIRA 13:7)

(Ships--Equipment and supplies)
(Electricity on ships)

APPROVED FOR RELEASE: 08/31/2001 CIA-RDP86-00513R001654130006-5"

"APPROVED FOR RELEASE: 08/31/2001 CIA-RDP86-00513R001654130006-5

SVIRIDENKO, P.A., doktor tekhn.nauk, prof.

Problems in the theory of an asynchronous machine with a periodically varying internal induction. Nauch.trudy MTILP no.18:216-223 '60. (MIRA 15:2)

1. Kafedra elektrotekhniki Moskovskogo tekhnologicheskogo instituta legkoy promyshlennosti.

(Electric machinery)

APPROVED FOR RELEASE: 08/31/2001 CIA-RDP86-00513R001654130006-5"

"APPROVED FOR RELEASE: 08/31/2001 CIA-RDP86-00513R001654130006-5

SVIRIDENKO, P.A., doktor tekhn.nauk, prof.

Asynchronous single-phase condenser generator. Nauch.trudy MTILP no.23:269-277 '61. (MIRA 15:9)

1. Kafedra elektrotekhniki Moskovskogo tekhnologicheskogo instituta legkoy promyshlennosti.
(Electric generators)

APPROVED FOR RELEASE: 08/31/2001 CIA-RDP86-00513R001654130006-5"

"APPROVED FOR RELEASE: 08/31/2001 CIA-RDP86-00513R001654130006-5

SVIRIDENKO, Petr Alekseyevich, doktor tekhn.nauk, prof.

Methods for regulating the angular velocity of electric motors. Izv. vys. ucheb. zav.; elektromekh. 6 no.5:628-630 '63. (MIRA 16:9)

1. Zaveduyushchiy kafedroy elektrotekhniki i elektrooborudovaniya Moskovskogo tekstil'nogo instituta.
(Electric motors)

APPROVED FOR RELEASE: 08/31/2001 CIA-RDP86-00513R001654130006-5"

"APPROVED FOR RELEASE: 08/31/2001 CIA-RDP86-00513R001654130006-5

SVIRIDENKO, P.A.

Frequency-and-pulse regulation of the rotation speed of asynchronous engines. Izv. vys. ucheb. zav.; tekh. tekst. prom. no.4:112-121 '65. (MIRA 18:9)

1. Moskovskiy tekstil'nyy institut.

APPROVED FOR RELEASE: 08/31/2001 CIA-RDP86-00513R001654130006-5"

"APPROVED FOR RELEASE: 08/31/2001 CIA-RDP86-00513R001654130006-5

SVIRIDENKO, P. A., ed.

Reference book on the control of insects in agriculture. Moskva, Gos. izd-vo kolkhoznoi i sovkhoznoi lit-ry, 1934. 414 p. (51-46743)

SB601. S8

APPROVED FOR RELEASE: 08/31/2001 CIA-RDP86-00513R001654130006-5"

"APPROVED FOR RELEASE: 08/31/2001 CIA-RDP86-00513R001654130006-5

SVIRIDENKO, P. A.

"Distribution and Mode of Feeding of Field Mouse Apodemus Agrarius Pall. and Its Bearing on Epidemics," Dok. AN, 42, Nos. 1-2, 1943; "On the Widespread Increase and Great Number of Field Mice Apodemus Agrarius Pall.," Trudy In-ta Zoologii (Akad. Nauk Ukr. SSR), 11, 1949.

APPROVED FOR RELEASE: 08/31/2001 CIA-RDP86-00513R001654130006-5"

"APPROVED FOR RELEASE: 08/31/2001 CIA-RDP86-00513R001654130006-5

SVIRIDENKO, P. A.

Mor., Zoology Institute, Acad. Sci., -1947-

"Growth and Life-Duration of the Field Mouse Apodemus Agrarius Pall.," Dck. AN, 58, No. 9, 1947

APPROVED FOR RELEASE: 08/31/2001 CIA-RDP86-00513R001654130006-5"

"APPROVED FOR RELEASE: 08/31/2001 CIA-RDP86-00513R001654130006-5

SVIRIDENKO, P.O. [Svyrydenko, P.O.].

On the distribution, propagation, and death of the field mouse Apodemus agrarius Pall. Trudy Inst. zool. AN URSR 2:18-47 '49.
(Field mice) (MIRA 11:6)

APPROVED FOR RELEASE: 08/31/2001 CIA-RDP86-00513R001654130006-5"

"APPROVED FOR RELEASE: 08/31/2001 CIA-RDP86-00513R001654130006-5

SVIRIDENKO, P.A.

SVIRIDENKO, P.O.

The first phase in the reconstruction of institutions of the Department of Biology of the Academy of Sciences of the Ukrainian S.S.R. Visnyk AN URSR 21 no.1:53-57 Ja '49. (MLRA 9:9)

(Academy of Sciences of the Ukrainian S.S.R.)
(Ukraine--Biology)

APPROVED FOR RELEASE: 08/31/2001 CIA-RDP86-00513R001654130006-5"

"APPROVED FOR RELEASE: 08/31/2001 CIA-RDP86-00513R001654130006-5

SVIRIDENKO, P. A.

Mice

Dynamics of number in mice at a populated point. Trudy Inst. zool. AN URSR 3, 1950.

9. Monthly List of Russian Accessions, Library of Congress, July 1952, UNCL.

APPROVED FOR RELEASE: 08/31/2001 CIA-RDP86-00513R001654130006-5"

"APPROVED FOR RELEASE: 08/31/2001 CIA-RDP86-00513R001654130006-5

SVIRIDENKO, P.A.

SOKUR, I.T.; SVYRYDENKO, P.O., diysnyy chlen.

On the zoogeographic characteristics of the Soviet Carpathian Mountains. Dop. AN URSR no.3:198-201 '51. (MLRA 6:9)

1. Akademiya nauk Ukrayins'koyi RSR (for Svyrydenko). 2. Instytut zoolohiyi Akademiyi nauk Ukrayins'koyi RSR (for Sokur).
(Carpathian Mountains--Zoogeography) (Zoogeography--Carpathian Mountains)

APPROVED FOR RELEASE: 08/31/2001 CIA-RDP86-00513R001654130006-5"

"APPROVED FOR RELEASE: 08/31/2001 CIA-RDP86-00513R001654130006-5

SVIRIDENKO, P.O.

KRAYUKHIN, B.V.; SVIRIDENKO, P.O., diysnyy chlen.

Metabolism rate of opposum shrimps [Mysidae] of the Dniester estuary. Dop.AN URSR no.4:282-286 '51. (MLRA 6:9)

1. Akademiya nauk Ukrayins'koyi RSR (for Sviridenko). 2. Instytut hidrobiolohiyi Akademiyi nauk Ukrayins'koyi RSR (for Krayukhin).
(Dniester river--Shrimps) (Shrimps--Dniester river)

APPROVED FOR RELEASE: 08/31/2001 CIA-RDP86-00513R001654130006-5"

"APPROVED FOR RELEASE: 08/31/2001 CIA-RDP86-00513R001654130006-5

SVIRIDENKO, KA

BYELANOVS'KYY, I.D.; DYADECHKO, M.P.; SVYRYDENKO, P.O., diysnyy chlen.

New parasite of the millet gnat Stenodiplosis panici Rod. Dop.AN URSR no.4: 291-296 '51. (MLRA 6:9)

1. Akademiya nauk Ukrayins'koyi RSR (for Svyrydenko). 2. Instytuty zoolohiyi i entomolohiyi ta fitopatolohiyi Akademiyi nauk Ukrayins'koyi RSR (for Byelanovs'kyy and Dyadechko). (Parasites--Insects) (Hymenoptera)

APPROVED FOR RELEASE: 08/31/2001 CIA-RDP86-00513R001654130006-5"

"APPROVED FOR RELEASE: 08/31/2001 CIA-RDP86-00513R001654130006-5

SVIRIDENKO, P. A.

"Theoretical Differences of Opinion on theRole of Olfactory Receptors of Rodents and Their Practical Refraction," Zool. Zhur., 30, No.4, pp. 344-51, 1951

Division of Ecology of Animals, Experimental Base, Zoological Inst., AS USSR

APPROVED FOR RELEASE: 08/31/2001 CIA-RDP86-00513R001654130006-5"

"APPROVED FOR RELEASE: 08/31/2001 CIA-RDP86-00513R001654130006-5

SVIRIDENKO, P. A., MASHIVANKO, YE. M.

Mice

Reaction of mice to matter which possesses a strong unpleasant odor, Trudy Inst. zool. AN URSR 6, 1951.

9. Monthly List of Russian Accessions, Library of Congress, July 1952, UNCL.

APPROVED FOR RELEASE: 08/31/2001 CIA-RDP86-00513R001654130006-5"

"APPROVED FOR RELEASE: 08/31/2001 CIA-RDP86-00513R001654130006-5

SVIRIDENKO, P.A.

USSR/Biology, Agricultural - Rodent Pests Aug 51

"The Role of Rodents in Forest Planting and the Protection of Nurseries and Forest Shelter Belts From Them," P. A. Sviridenko, Act Mem Acad Sci Ukrainian SSR

"Trudy Inst Zool, Ak Nauk Ukrainskoy SSR" Vol VI, pp 3-45

Describes the damage done by mice and mouse-like rodents to forests and in connection with the planting of forest shelter belts. Recommends methods of combating them which comprise protec-

215T11

over

APPROVED FOR RELEASE: 08/31/2001 CIA-RDP86-00513R001654130006-5"

"APPROVED FOR RELEASE: 08/31/2001 CIA-RDP86-00513R001654130006-5

SVIRIDENKO, P. A., GIRENKO, L. L.

Rodentia

Significance of the olfactory receptor in a rodent's search for food. Trudy Inst. zool. AN URSR 6, 1951.

9. Monthly List of Russian Accessions, Library of Congress, July 1952, UNCL.

Mice

Propagation and variation in number of the golden throat mouse (A. flavicollis Melch), Trudy Inst. zool. AN URSR 6, 1951.

APPROVED FOR RELEASE: 08/31/2001 CIA-RDP86-00513R001654130006-5"

9. Monthly List of Russian Accessions, Library of Congress, July 1952, UNCL.

"APPROVED FOR RELEASE: 08/31/2001 CIA-RDP86-00513R001654130006-5

SVIRIDENKO, P.O.

BIRHER, T.I.; SVIRIDENKO, P.O., diysnyy chlen.

Osmotic pressure of cavity fluids in certain invertebrates of the Dniester Estuary. Dop.AN URSR no.3:229-231 '52. (MLRA 6:9)

1. Akademiya nauk Ukrayins'koyi RSR (for Sviridenko). 2. Instytut hidrobiolohiyi Akademiyi nauk Ukrayins'koyi RSR (for Birher).
(Dniester river--Shrimps) (Shrimps--Dniester river)

APPROVED FOR RELEASE: 08/31/2001 CIA-RDP86-00513R001654130006-5"

"APPROVED FOR RELEASE: 08/31/2001 CIA-RDP86-00513R001654130006-5

SVIRIDENKO, P.O.

Rodents as pests of Antheraea pernyi. Trudy Inst, zool AN URSR no.7:86-92 '52. (MLRA 8:12)

(Silkworms)

APPROVED FOR RELEASE: 08/31/2001 CIA-RDP86-00513R001654130006-5"

"APPROVED FOR RELEASE: 08/31/2001 CIA-RDP86-00513R001654130006-5

SVIRIDENKO, P.O., diysniy chlen.

Transformation of mammalian fauna in southern Ukraine. Visnyk AN URSR 24 no.11:43-48 N '53.

1. Akademiya nauk Ukrains'koi RSR.
(Rodentia--Ukraine)

APPROVED FOR RELEASE: 08/31/2001 CIA-RDP86-00513R001654130006-5"

"APPROVED FOR RELEASE: 08/31/2001 CIA-RDP86-00513R001654130006-5

STRAUTMAN, Fedor Ioganovich; SVIRIDENKO, P.A., redaktor; GRUDZINSKAYA, O.S., redaktor; KRYLOVSKAYA, N.S., tekhredaktor

[Birds of Soviet Carpathia]Ptitsy Sovetskikh Karpat. Kiev, Izd-vo Akademii nauk USSR, 1954. 330 p. (MLRA 8:4)

1. Deystvitel'nyy chlen Akademii nauk USSR (for Sviridenko).
(Carpathian Mountains--Birds) (Ukraine--Birds)

APPROVED FOR RELEASE: 08/31/2001 CIA-RDP86-00513R001654130006-5"

"APPROVED FOR RELEASE: 08/31/2001 CIA-RDP86-00513R001654130006-5

SVIRIDENKO, P.A.

Unconditioned and conditioned responses to food and nonfood scents in wild rodents. Vop. fiziol. no.10:11-25 '54 (MLRA 10:5)

1. Institut zoologii Akademii nauk USSR.
(CONDITIONED RESPONSE) (REFLEXES) (ODORS)

APPROVED FOR RELEASE: 08/31/2001 CIA-RDP86-00513R001654130006-5"

"APPROVED FOR RELEASE: 08/31/2001 CIA-RDP86-00513R001654130006-5

SVIRIDENKO, P.A.

Rodents' search for food under ground and their conditioned responses to non-food odors. Zool.zhur. 33 no.4:876-888 Jl-Ag '54. (MIRA 7:8)

1. Zoologicheskiy institut Akademii nauk SSSR.
(Rodentia) (Smell)

APPROVED FOR RELEASE: 08/31/2001 CIA-RDP86-00513R001654130006-5"

"APPROVED FOR RELEASE: 08/31/2001 CIA-RDP86-00513R001654130006-5

SVIRIDENKO, Pavel Alekseyevich; NOVIKOV, B.G., doktor biologicheskikh nauk, otvetstvennyy redaktor; GRUDZINSKAYA, O.S., redaktor izdatel'stva; KOLOMIYCHUK, V.O., tekhnicheskiy redaktor

[Storage of food by animals] Zapasanie korma zhivotnymi. Kiev, Izd-vo Akad. nauk USSR, 1957. 154 p. (MLRA 10:4)
(Animals, Food habits of)

APPROVED FOR RELEASE: 08/31/2001 CIA-RDP86-00513R001654130006-5"

"APPROVED FOR RELEASE: 08/31/2001 CIA-RDP86-00513R001654130006-5

SVIRIDENKO, P.A.

"Rodent pests of orchards and vegetable gardens" by N.V. Bashenina and others. Reviewed by P.A. Sviridenko. Zool. zhur. 37 no.9:1420-1421 8 '58. (MIRA 11:10)

(Rodentia) (Agricultural pests)
(Bashenina, N.V.)

APPROVED FOR RELEASE: 08/31/2001 CIA-RDP86-00513R001654130006-5"

"APPROVED FOR RELEASE: 08/31/2001 CIA-RDP86-00513R001654130006-5

SVIRIDENKO, P.A.

Method of establishing the size of the litter in rodents by placental spots [with summary in English]. Biul.MOIP. Otd.biol. 63 no.2:49-54 Mr-Ap '58 (MIRA 11:7)

(MICE)
(PLACENTA)

APPROVED FOR RELEASE: 08/31/2001 CIA-RDP86-00513R001654130006-5"

"APPROVED FOR RELEASE: 08/31/2001 CIA-RDP86-00513R001654130006-5

SVIRIDENKO, P.A. (Kiyev)

Attraction of insectivorous birds and the dynamics of their numbers at the feeding site depending on weather conditions. Zool. zhur. 39 no.11:1670-1683 N '60. (MIRA 14:1)
(Birds, Protection of) (Titmice)

APPROVED FOR RELEASE: 08/31/2001 CIA-RDP86-00513R001654130006-5"

"APPROVED FOR RELEASE: 08/31/2001 CIA-RDP86-00513R001654130006-5

SVIRIDENKO, P.A., akademik

New possibilities of attracting insectivorous birds for controlling harmful insects. Zashch. rast. ot vred. i bol. 6 no.11: 34-37 N '61. (MIRA 16:4)

1. AN UkrSSR, Kiyev.
(Birds, Injurious and beneficial)
(Insects, Injurious and beneficial—Biological control)

APPROVED FOR RELEASE: 08/31/2001 CIA-RDP86-00513R001654130006-5"

"APPROVED FOR RELEASE: 08/31/2001 CIA-RDP86-00513R001654130006-5

SVIRIDENKO, P.A., akademik (Kiyev)

First aerial expedition in the control of locust. Zashch.rast. ot vred.i bol. 7 no.4:18-19 Ap '62. (MIRA 15:12)

1. AN UkrSSR.
(Kuma Valley--Locusts--Extermination)
(Aeronautics in agriculture)

APPROVED FOR RELEASE: 08/31/2001 CIA-RDP86-00513R001654130006-5"