"APPROVED FOR RELEASE: 07/16/2001 CIA-RDP86-00513R001755620012-2

USSR / Human and Animal Physiology. Sensory Organs. T

Abs Jour: Ref Zhur-Biol., No 9, 1958, 41785.

Author : ~~Tikhonova, G. P.~~
Inst : Academy of Sciences USSR.
Title : Morphological Changes in the Cornea of Rats Under the Effect of Ultraviolet Rays.

Orig Pub: Dokl. AN SSSR, 1957, 113, No 2, 319-322.

Abstract: The right eyes of 50 white rats, 2-3 months old, were exposed for a period of 2 1/2 minutes to a PRK-4 light, at a distance of 30 cm from the eye (6.10^3 watt in 1 minute per 1 m^2), the left eye being protected by a mask. The eyes were enucleated at different intervals, from 5 hours to

Card 1/2

APPROVED FOR RELEASE: 07/16/2001 CIA-RDP86-00513R001755620012-2"

"APPROVED FOR RELEASE: 07/16/2001 CIA-RDP86-00513R001755620012-2

USSR / Human and Animal Physiology. Sensory Organs. T

Abs Jour: Ref Zhur-Biol., No 9, 1958, 41785.

Abstract: 10 days after irradiation, and fixed in Zenker's fluid. The preparations were stained with Azocarmine, by the Heidenhein method and iron hemotoxylin, by the Rego and Feigen method. Within 48 hours after irradiation, an alterative exudative inflammation, with necrosis of the epithelium and leucocytic infiltration of the stroma, developed in the cornea. Fibrillar structures were noted in the aqueous humor. Recovery of the structure of the cornea took place within 3-7 days after the irradiation. -- F. Ye. Fridman.

Card 2/2

APPROVED FOR RELEASE: 07/16/2001 CIA-RDP86-00513R001755620012-2"

"APPROVED FOR RELEASE: 07/16/2001 CIA-RDP86-00513R001755620012-2

TIKHONOVA, G.P.

Regeneration of the cornea and its nervous elements accompanying experimentally induced mechanical trauma in rats. Dokl.AN SSSR 111 no.1:217-220 N-D '56. (MLRA 10:2)

1. Predstavleno akademikom K.I.Skryabinym.
(CORNEA) (REGENERATION (BIOLOGY))

APPROVED FOR RELEASE: 07/16/2001 CIA-RDP86-00513R001755620012-2"

"APPROVED FOR RELEASE: 07/16/2001 CIA-RDP86-00513R001755620012-2

TIKHONOVA, G.P.

Morphological changes appearing in the cornea of rats under the influence of ultraviolet rays. Dokl. AN SSSR 113 no.2: 319-322 Mr '57. (MLRA 10:5)

1. Institut morfologii zhivotnykh im. A.N. Severtsova Akademii nauk SSSR. Predstavleno akademikom K.I. Skryabinym.
(CORNEA) (ULTRAVIOLET RAYS--PHYSIOLOGICAL EFFECT)

APPROVED FOR RELEASE: 07/16/2001 CIA-RDP86-00513R001755620012-2"

"APPROVED FOR RELEASE: 07/16/2001 CIA-RDP86-00513R001755620012-2

SMIRNOV, Dmitriy Vasil'yevich, dots.; TANASEVICH, Valerian Grigor'yevich, kand. yurid. nauk; IVANOV, V.A., dots., otv. red.; TIKHONOVA, G.P., red.

[Principles of accounting and forensic accounting expertise] Osnovy bukhgalterskogo ucheta i sudebno-bukhgalterskoi ekspertizy. Leningrad, Izd-vo Leningr. univ., 1964. 139 p. (MIRA 18:1)

1. Ekonomicheskiy fakul'tet Leningradskogo gosudarstvennogo universiteta (for Smirnov). 2. Vsesoyuznyy institut po izucheniyu prichin i razrabotke mer preduprezhdeniya prestupnosti (for Tanasevich).

APPROVED FOR RELEASE: 07/16/2001 CIA-RDP86-00513R001755620012-2"

"APPROVED FOR RELEASE: 07/16/2001 CIA-RDP86-00513R001755620012-2

DOR[illegible]NKO, G.N.; SHELEPIN, O.Ye.; NAZAROVA, Z.N.; NOVIKOV, V.N.
TYKHONOVA, G.P.

Condensation of 1-methyl-3-phenyl-5,6,7,8-tetrahydroisochromylium perchlorate aldehydes of the aromatic and heterocyclic series. Zhur. ob. khim. 35 no.3:570-574 Mr '65. (MIRA 18:[illegible])

1. Rostovskiy-na-Donu gosudarstvennyy universitet.

APPROVED FOR RELEASE: 07/16/2001 CIA-RDP86-00513R001755620012-2"

"APPROVED FOR RELEASE: 07/16/2001 CIA-RDP86-00513R001755620012-2

L 11160-63 EPR/EWP(j)/EPF(c)/EWT(m)/BDS--AFFTC/ASD--Ps-4/Pc-4/Pr-4--RM/WW

86

ACCESSION NR: AT3002183 S/2917/62/000/242/0134/0147

77

AUTHOR: Artamonov, V. S. (Candidate of technical sciences); Svyatkovskaya, Ye. D. (Engineer); Solntsev, D. I. (Engineer); Tikhonova, G. S. (Engineer)

TITLE: Polymer materials for corrosion protection of railroad bridges

SOURCE: Moscow. Vsesoyuzny*y nauchno-issledovatel'skiy institut zheleznodorozhnogo transporta. Trudy, no. 242, 1962. Primeneniye plastmass na zheleznodorozhom transporte, 134-147

TOPIC TAGS: polymer anticorrosion paint, bridge painting, FL-03K primer, FL-013 primer, KhV-113 enamel, SKhBM-17 enamel, EP-51 enamel, E-4021 epoxy putty, FL-14, Al powder enamel, VL-08 primer, PKhV26 enamel, PKhV-715 enamel, PkhV-714 enamel, KhS010 primer

ABSTRACT: Experiments with various polymers intended for coating rr bridges are reported. A review of bridge-painting practices in various countries opens the article. Then some physical and chemical characteristics are presented of the following coating materials: FL-03K phenol-formaldehyde primer, FL-013 phenol-alkyd primer, KhS010 copolymer of vinyl chloride and vinylidene chloride, VL-08 phosphate primer, protective zinc primer; PKhV-26, PKhV-715, PKhV-714, and KhV113

Card 1/2

APPROVED FOR RELEASE: 07/16/2001 CIA-RDP86-00513R001755620012-2"

"APPROVED FOR RELEASE: 07/16/2001 CIA-RDP86-00513R001755620012-2

L 11160-63
ACCESSION NR: AT3002183

vinyl perchloride enamels; SKhB-17 enamel (copolymer of vinyl chloride and vinyl-butyl ester); SKhBM-17 enamel (copolymer of vinyl chloride, vinyl-butyl ester, and methyl-acrylate); FSKh-26 and 2062-F glyptal enamels; ED-6 epoxy plus Al powder lacquer; FL-14 phenol resin plus Al powder lacquer; EP-51 nitroalkyd-epoxy enamel; E-4021 epoxy putty; divinyl-acetylene paint. Quality of coatings was tested in laboratory, at atmospheric-corrosion stations, and on rr bridges (trial coats). These physico-mechanical characteristics of coats were determined: adhesion, impact strength, bending strength, thickness, hardness, and continuity. The sample coatings were also tested in a hydrostatic chamber, a sulfur-dioxide chamber, a weatherometer, and at atmospheric-corrosion stations in Moscow and in Kerch. Results of tests are described in detail. The best results were exhibited by the following materials which are, therefore, recommended for coating the rr bridges: E-4021 epoxy putty, KhV-113 enamel over FL-03K or FL-013 primer, SKhBM-17 enamel over the same primers, EP-51 enamel over the above epoxy putty, and FL-14 plus Al powder enamel over the above primers. Orig. art. has: 2 tables.

ASSOCIATION: Vsesoyuzny*y nauchno-issledovatel'skiy institut zheleznodorozhnogo transporta (All-Union Scientific Research Institute of Railroad Transport)

SUBMITTED: 00 DATE ACQD: 10May63 ENCL: 00
SUB CODE: 00 NO REF SOV: 010 OTHER: 001

Card 2/2 cs/

APPROVED FOR RELEASE: 07/16/2001 CIA-RDP86-00513R001755620012-2"

"APPROVED FOR RELEASE: 07/16/2001 CIA-RDP86-00513R001755620012-2

PHASE I BOOK EXPLOITATION SOV/4164

Vsesoyuznoye soveshchaniye po splavam redkikh metallov. 1st, Moscow, 1957

Redkiye metally i splavy; trudy... (Rare Metals and Alloys; Transactions of the First All-Union Conference on Rare-Metal Alloys) Moscow, Metallurgizdat, 1960. 438 p. 3,150 copies printed.

Sponsoring Agencies: Akademiya nauk SSSR. Institut metallurgii; USSR Komissiya po redkim metallam pri nauchno-tekhnicheskom komitete.

Ed.: I.K. Shapovalov; Ed. of Publishing House: O.M. Kamayeva; Tech. Ed.: P.G. Ialent'yeva.

PURPOSE: This collection of articles is intended for metallurgical engineers, physicists, and workers in the machine-building and radio-engineering industries. It may also be used by students of schools of higher education.

COVERAGE: The collection contains technical papers which were presented and discussed at the First All-Union Conference on Rare-Metal Alloys, held in the Institute of Metallurgy, Academy of Sciences USSR in November 1957. Results of investigations of rare-metal alloys, titanium, and copper-base alloys with additions of rare metals are presented and discussed along with investigations of rhenium, vanadium, niobium, and their alloys. The effect of rare-earth metals on properties of magnesium alloys and steels is analyzed. The uses of rhenium as a dehydrating catalyst, electroplating material, and material suitable for making plugs for automobile electrical systems are discussed. Also, the effect of the addition of certain elements on the properties of heat-resistant steel is examined and alloys with special physical properties (particularly semiconductive alloys) are discussed. No personalities are mentioned. Soviet and non-Soviet references accompany some of the articles.

PART II. TITANIUM AND COPPER-BASE ALLOYS WITH RARE-METAL ADDITIONS

Danilova, G.P., I.P. Dymzhinina, and M.V. Mal'tsev. Investigations of Alloys of the Titanium-Niobium-Aluminum and Titanium-Molybdenum-Aluminum Systems 34

Mal'tsev, M.V., G.P. Danilova, and Ye. A. Kamenskaya. Effect of Rare Metals on the Oxidability of Titanium and of Some Titanium Alloys 42

Mal'tsev, M.V., and V.Z. Karlinskiy. Investigation of Titanium-Aluminum-Vanadium Ternary Alloy Systems 52

Danilova, G.P., G.S. Tikhonova, I.S. Moiseyeva, L.I. Seleznev, and L.V. Mel'nikova. High-Strength and Heat-Conducting Alloys of the Copper-Cobalt-Beryllium System 63

Rare Metals (Cont.) SOV/4164

PART III. RHENIUM, VANADIUM, NIOBIUM, ZIRCONIUM AND ALLOYS BASED ON THEM

Balandin, A.A., Ye.I. Karpeyskaya, and A.A. Tolstopyatova. Rhenium as a Dehydrating Catalyst 72

Tylkina, M.A., and Ye.M. Savitskiy. Rhenium Alloys 80

Sklyarenko, S.I., Z.M. Sominskaya, A.A. Nikitina, and I.I. Lavrov. Electroplating With Rhenium 111

Usov, V.V., and M.D. Poxolotskaya. Electrical Contacts Made of Rhenium 123

Shumskaya, Ye.A. The Possibility of Using Alloys on Tungsten With Rhenium for Making Contacts for Automobile Electrical Equipment 133

Beron, V.V., and Ye.M. Savitskiy. Properties of Vanadium, Niobium, and of Alloys Based on Them 136

Card 4/8

(14)

APPROVED FOR RELEASE: 07/16/2001 CIA-RDP86-00513R001755620012-2"

"APPROVED FOR RELEASE: 07/16/2001 CIA-RDP86-00513R001755620012-2

L 40370-66 EWT(m)/EWP(j)/T IJP(c) JD

ACC NR: AP6027274 (A) SOURCE CODE: UR/0191/66/000/008/0015/0018

AUTHOR: Zhivukhin, S. M.; Kireyev, V. V.; Tikhonova, G. S.

ORG: none

TITLE: Polymers based on phosphonitrile chlorides and bisphenol phenoxides

SOURCE: Plasticheskiye massy, no. 8, 1966, 15-18

TOPIC TAGS: ~~phosphorus containing polymer,~~ phosphonitrile ~~chloride,~~ bisphenol phenoxide, ~~heat resistant polymer,~~ reactive polymer, POLYMER HEAT RESISTANCE, PHENOL, RESIN, POLYMER CHEMISTRY

ABSTRACT: A study has been made of the synthesis of phosphonitrile chloride-bisphenol phenoxide polymers. This reaction is of interest because it has the following advantages: it proceeds rapidly at 70—130C in the absence of catalysts without the liberation of HCL. The products exhibit high heat resistance and contain reactive phenoxide end groups. The starting materials were phosphonitrile chloride trimer and/or phosphonitrile chloride oily oligomers, and Na or K phenoxides of 2,2-bis(p-hydroxylphenyl) propane or of resorcinal. The reactions were conducted in dehydrated m-xylene, dioxane, or methyl ethyl ketone. The procedure is described in the source. The following reaction mechanism is proposed

Card 1/3 UDC: 678.85

APPROVED FOR RELEASE: 07/16/2001 CIA-RDP86-00513R001755620012-2"

"APPROVED FOR RELEASE: 07/16/2001 CIA-RDP86-00513R001755620012-2

L 40379-66

ACC NR: AP6027274

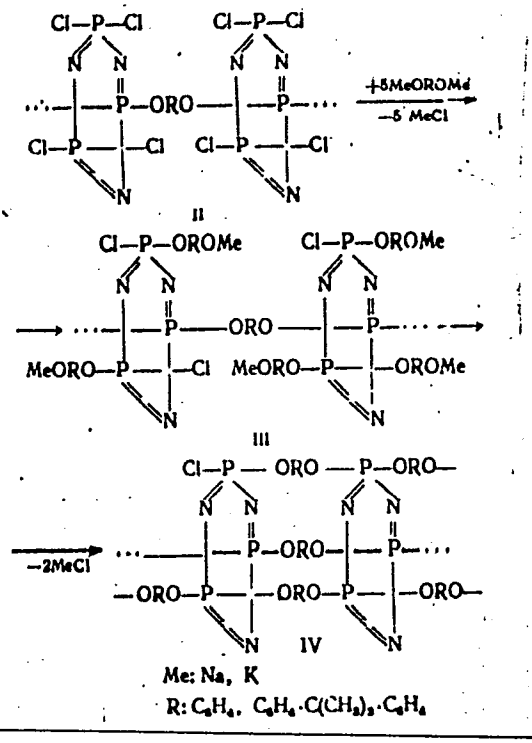

Me: Na, K

R: C_6H_4, $C_6H_4 \cdot C(CH_3)_2 \cdot C_6H_4$

Card 2/3

APPROVED FOR RELEASE: 07/16/2001 CIA-RDP86-00513R001755620012-2"

"APPROVED FOR RELEASE: 07/16/2001 CIA-RDP86-00513R001755620012-2

L 40379-66

ACC NR: AP6027274

The optimum reaction conditions were: temp, 70—75C; time, 10 hr; phosphonitrile chloride/phenoxide molar ratio 1/2 to 1/4. The yield in soluble and insoluble polymers was about 85%. The mixture of crystalline and oily oligomers obtained in the synthesis of phosphonitrile chloride can be used as is in the process. The polymers are fusible resins, soluble in polar solvents, and curable by heating with paraform or urotropine. Orig. art. has: 3 figures and 1 table. [BO]

SUB CODE: 11/ SUBM DATE: none/ ORIG REF: 011/ OTH REF: 005/ ATD PRESS: 5052

Card 3/3 MLP

APPROVED FOR RELEASE: 07/16/2001 CIA-RDP86-00513R001755620012-2"

"APPROVED FOR RELEASE: 07/16/2001 CIA-RDP86-00513R001755620012-2

KRETOV, A. Ye.; TIKHONOVA, G.V.

Reactions of dicyanodiamide with acetaldehyde and chloral.
Zhur. ob. khim. 34 no.7:2428-2430 Jl '64 (MIRA 17:8)

1. Dnepropetrovskiy khimiko-tekhnologicheskiy institut.

APPROVED FOR RELEASE: 07/16/2001 CIA-RDP86-00513R001755620012-2"

"APPROVED FOR RELEASE: 07/16/2001 CIA-RDP86-00513R001755620012-2

DOMAN, N.G.; TIKHONOVA, G.V. (Moskva)

Some problems of the energy of lithotrophic organisms. Usp. sovr. biol. 60 no.2:238-256 S-O '65. (MIRA 18:10)

1. Institut biokhimii AN SSSR.

APPROVED FOR RELEASE: 07/16/2001 CIA-RDP86-00513R001755620012-2"

"APPROVED FOR RELEASE: 07/16/2001 CIA-RDP86-00513R001755620012-2

KRETOV, A.Ye; TIKHONOVA, G.V.

N-arylsulfamide derivatives of diethanolamine. Zhur.ob.khim. 28 no.10:2808-2812 O '58. (MIRA 11:12)

1. Dnepropetrovskiy khimiko-tekhnologicheskiy institut.
(Ethanol)

APPROVED FOR RELEASE: 07/16/2001 CIA-RDP86-00513R001755620012-2"

"APPROVED FOR RELEASE: 07/16/2001 CIA-RDP86-00513R001755620012-2

AUTHORS: Kretov, A. Ye , Tikhonova, G. V. SOV/79-29-2-12/7

TITLE: N-Aryl Sulfamide Derivatives of Monoethanol Amine (N-Aril-sul'famidnyye proizvodnyye monoetanolamina)

PERIODICAL: Zhurnal obshchey khimii, 1959, Vol 29, Nr 2, pp 412-415 (USSR)

ABSTRACT: The synthesis of the new N,β-oxyethylaryl sulfamides and their derivatives is not only of theoretical but also of practical importance (insecto-fungicidal activity). Contrarily to the already known sulfamide syntheses, in the work under review the authors used the method which they had earlier worked out for the synthesis of N,N-di-β-oxyethylaryl sulfamides (Ref 9): $ArSO_2Cl+2NH_2CH_2CH_2OH \longrightarrow ArSO_2NHCH_2CH_2OH+HCl.H_2NCH_2CH_2OH$. The corresponding aryl sulfochloride and monoethanol amine were heated for 5 hours on the reflux condenser in an o-xylene or benzene solution (Table 1). A part of the compounds obtained in syrup form did not crystallize. They are all easily soluble in alkali lyes, acetone and alcohol, more difficultly in benzene and difficultly soluble in water. For the purpose of investigating the chemical properties of N,β-oxyethylaryl sulfamides, the authors prepared sodium salts, chlorides and N-butyl or N-benzyl sub-

Card 1/2

APPROVED FOR RELEASE: 07/16/2001 CIA-RDP86-00513R001755620012-2"

"APPROVED FOR RELEASE: 07/16/2001 CIA-RDP86-00513R001755620012-2

stituted compounds. The synthesized N-β-oxyethylaryl sulfamide derivatives are specified in tables 2 and 3. All N,β-chloroethylaryl sulfamides are of a crystalline nature. Their solving conditions are given. All N-butyl and N-benzyl-N-β-oxyethylaryl sulfamides are transparent, syrup-like liquids. There are 3 tables and 9 references, 3 of which are Soviet.

ASSOCIATION: Dnepropetrovskiy khimiko-tekhnologicheskiy institut (Dnepropetrovsk Chemico-technological Institute)

SUBMITTED: December 30, 1957

Card 2/2

APPROVED FOR RELEASE: 07/16/2001 CIA-RDP86-00513R001755620012-2"

"APPROVED FOR RELEASE: 07/16/2001 CIA-RDP86-00513R001755620012-2

SOV/79-28-10-37/60

AUTHORS: Kretov, A. Ye., Tikhonova, G. V.

TITLE: N-Aryl Sulfamide Derivatives of Diethanol Amine (N-arilsul'famidnyye proizvodnyye dietanolamina)

PERIODICAL: Zhurnal obshchey khimii, 1958, Vol 28, Nr 10, pp 2808 - 2812 (USSR)

ABSTRACT: In contrast to the substituted ethanol amines, the aryl sulfamide derivatives of the mono and diethanol amines are almost not investigated at all. The present paper was carried out to investigate the synthesis and the properties of these compounds, first of all of the compounds from diethanol amine and aryl sulfochlorides

$$ArSO_2Cl+2HN(CH_2CH_2OH)_2 \rightarrow ArSO_2N(CH_2CH_2OH)_2+HClHN(CH_2CH_2OH)_2.$$

The final products of this reaction, the N,N-di-β-hydroxy ethyl aryl sulfamides and their derivatives, were used in form of their esters, just as the esters of the N-alkyl-N-β-hydroxy ethyl aryl sulfamides as waxes and plastifiers are used (Refs 1,2). The sulfamides of this type hitherto obtained differ in many a respect

Card 1/3

APPROVED FOR RELEASE: 07/16/2001 CIA-RDP86-00513R001755620012-2"

"APPROVED FOR RELEASE: 07/16/2001 CIA-RDP86-00513R001755620012-2

from those synthesized by the authors. They synthesized 10 N,N-di-β-hydroxy ethyl aryl sulfamides: $ArSO_2N(CH_2CH_2OH)_2$ (see expressions for Ar in scheme 2). The synthesis of the diethanol amine derivatives of the aryl sulfamides proceeding from equal mole amounts of diethanol amine and aryl sulfochloride in the presence of pyridine according to the well-known reaction (Refs 1,5) failed. Only the N,N-di-β-hydroxy ethyl-β-naphthalene sulfamide was in this case obtained in a yield of 25%. The rest of the compounds were synthesized according to a new method. It consisted in the reaction of the double amount of diethanol amine with the corresponding aryl sulfo chloride in the absence of bases in a 5 hours boiling in o-xylol. The N,N-di-β-hydroxy ethyl aryl sulfamides are easily obtained in pure state, depending on the solvent. Their structure was proved by the synthesis of their chlorides and bromides. The experimental part and scheme 3 give information of the halogen derivatives of the N,N-di-β-hydroxy ethyl aryl sulfamides. There are 6

APPROVED FOR RELEASE: 07/16/2001 CIA-RDP86-00513R001755620012-2"

"APPROVED FOR RELEASE: 07/16/2001 CIA-RDP86-00513R001755620012-2

N-Aryl Sulfamide Derivatives of Diethanol Amine SOV/79-28-10-37/60

references, 3 of which are Soviet.

ASSOCIATION: Dnepropetrovskiy khimiko-tekhnologicheskiy institut (Dnepropetrovsk Chemical and Technological Institute)

SUBMITTED: August 2, 1957

Card 3/3

APPROVED FOR RELEASE: 07/16/2001 CIA-RDP86-00513R001755620012-2"

"APPROVED FOR RELEASE: 07/16/2001 CIA-RDP86-00513R001755620012-2

KOKUYEV, Vasiliy Ivanovich, kand.sel'khoz.nauk; TIKHONOVA, I., red.; SALAKHUTDINOVA, A., tekhn. red.

[Commercial and promising new cotton varieties]Sorta khlopchatnika, promyshlennye i perspektivnye. Tashkent, Gosizdat UzSSR, 1961. 50 p. (MIRA 15:11)
(Uzbekistan—Cotton—Varieties)

APPROVED FOR RELEASE: 07/16/2001 CIA-RDP86-00513R001755620012-2"

"APPROVED FOR RELEASE: 07/16/2001 CIA-RDP86-00513R001755620012-2

NASYROVA, Turgun; BALASHEV, N.N., prof., red.; ~~TIKHONOVA, I.~~, red.; ABBASOV, T., tekhn. red.

[New methods for planting potatoes] Novye sposoby posadki kartofelia. Pod red. N.N.Balasheva. Tashkent, Gos.izd-vo UzSSR, 1962. 37 p. (MIRA 16:5)

(Uzbekistan--Potatoes)

APPROVED FOR RELEASE: 07/16/2001 CIA-RDP86-00513R001755620012-2"

"APPROVED FOR RELEASE: 07/16/2001 CIA-RDP86-00513R001755620012-2

KOSOV, A.P.; MAGAY, L.I.; NIKULIN, B.K.; PAK, M.S.; RUDAKOV, G.M.; SAYFI, E.Kh.; SERGIYENKO, V.A.; SOKOLOV, F.A.; SPIRIDONOV, P.V.; SHPOLYANSKIY, D.M.; TIKHONOVA, I., red.

[Overall mechanization and cultivation practices for cotton crops] Kompleksnaia mekhanizatsiia i agrotekhnika khlopchatnika. Tashkent, Gos.izd-vo Uzbekskoi SSR, 1964. 407 p. (MIRA 17:11)

1. Sredneaziatskiy institut mekhanizatsii i elektrifikatsii sel'skogo khozyaystva. 2. Sredneaziatskiy institut mekhanizatsii i elektrifikatsii sel'skogo khozyaystva (for all except Tikhonova).

APPROVED FOR RELEASE: 07/16/2001 CIA-RDP86-00513R001755620012-2"

"APPROVED FOR RELEASE: 07/16/2001 CIA-RDP86-00513R001755620012-2

NARIMOV, Ukhtom; TIKHONOVA, I., red.; SALAKHUTDINOVA, A., tekhn. red.

[Ways to reduce the expenditure of labor in cotton production] Puti sokrashcheniia zatrat truda na proizvodstvo khlopka. Tashkent, Gosizdat UzSSR, 1962. 49 p. (MIRA 16:6)
(Fergana--Cotton growing--Labor productivity)

APPROVED FOR RELEASE: 07/16/2001 CIA-RDP86-00513R001755620012-2"

"APPROVED FOR RELEASE: 07/16/2001 CIA-RDP86-00513R001755620012-2

BUZUNOV, I.A., dots.; GRIBANOV, I.I., dots.; IVANOV, A.I., prof. [deceased]; MASLOV, M.I., dots.; RACHINSKIY, A.A., dots.; TROITSKIY, A.A., dots.; TROITSKIY, A.V., prof.; KHORST, G.O., dots.; BEN'YAMINOVICH, E.M., retsenzent; KRITSKIY, V.M., retsenzent; POYARKOV, V.F., retsenzent; BATURIN, S.I., spets. red.; TIKHONOVA, I., red.; BAKHTIYAROV, A., tekhn. red.

[Manual for hydraulic and irrigation engineers] Spravochnik gidrotekhnika-irrigatora. [By] I.A. Buzunov i dr. Tashkent, Gosizdat UzSSR. Pt.1. 1962. 442 p. (MIRA 16:7)
(Hydraulic engineering) (Irrigation)

APPROVED FOR RELEASE: 07/16/2001 CIA-RDP86-00513R001755620012-2"

"APPROVED FOR RELEASE: 07/16/2001 CIA-RDP86-00513R001755620012-2

P'YANOVSKAYA, Tat'yana Petrovna; TIKHONOVA, I., red.; SALAKHUTDINOVA, A., tekhn. red.

[More and cheaper pork; about swine growers on the "Vrevskii" No.4 State Farm]Bol'she deshevoi svininy; o svinovodakh sovkhoza "Vrevskii," no.4. Tashkent, Gosizdat UzSSR, 1961. 10 p. (MIRA 15:10)

(Swine)

APPROVED FOR RELEASE: 07/16/2001 CIA-RDP86-00513R001755620012-2"

"APPROVED FOR RELEASE: 07/16/2001 CIA-RDP86-00513R001755620012-2

TIKHONOVA, I., red.; SALAKHUTDINOVA, A., tekhn. red.

[Leading bulldozer operator; work practices of Ivan Kostin, bulldozer operator of building and assembly office No.5]Peredovoi bul'dozerist; opyt raboty bul'dozerista stroitel'no-montazhnoi kontory No.5 Ivana Kostina. Tashkent, Gos. Izd-vo UzSSR, 1961. 8 p. (MIRA 15:7)

1. Uzbek S.S.R. Ministerstvo vodnogo khozyaystva.
(Fergana—Bulldozers)

APPROVED FOR RELEASE: 07/16/2001 CIA-RDP86-00513R001755620012-2"

"APPROVED FOR RELEASE: 07/16/2001 CIA-RDP86-00513R001755620012-2

SHARAKHMEDOV, A.; RAKHMANKULOV, A. [translator]; TIKHONOVA, I., red.
SALAKHUTDINOVA, A., tekhn. red

[Green light to cotton; from the experience of the Khrushchev Collective Farm Yangi-Yul' District, Tashkent Province] Khlopk"-zelenuiu ulitsu; iz opyta kolkhoza imeni Khrushcheva IAnguiul'-skogo raiona Tashkentskoi oblasti. Tashkent, Gos.izd-vo UzSSSR, 1961. 45 p. (MIRA 15:1)

(Yangi-Yul' District--Cotton growing)

APPROVED FOR RELEASE: 07/16/2001 CIA-RDP86-00513R001755620012-2"

"APPROVED FOR RELEASE: 07/16/2001 CIA-RDP86-00513R001755620012-2

KORBUT, I.; SMIRNOVA, Z.; TIKHONOVA, I., red.; ABBASOV, T., tekhn. red.

[For high yields and low costs; the "Politotdel" Collective Farm in Verkhne-Chirchik District, Tashkent Province]Za vysokie urozhai i nizkuiu sebestoimost'; kolkhoz "Politotdel" Verkhne-Chirchikskogo raiona Tashkentskoi oblasti. Tashkent, Gosizdat UzSSR, 1960. 33 p. (MIRA 15:9)
(Verkhne-Chirchik District--Agriculture)

APPROVED FOR RELEASE: 07/16/2001 CIA-RDP86-00513R001755620012-2"

"APPROVED FOR RELEASE: 07/16/2001 CIA-RDP86-00513R001755620012-2

GANIYEV, Salom Gulyamovich; TIKHONOVA, I., red.; SALAKHUTDINOVA, A., tekhn. red.

[Sericulture of Uzbekistan] Shelkovodstvo Uzbekistana. Tashkent, Gos.izd-vo UzSSR, 1961. 26 p. (MIRA 17:2)

APPROVED FOR RELEASE: 07/16/2001 CIA-RDP86-00513R001755620012-2"

"APPROVED FOR RELEASE: 07/16/2001 CIA-RDP86-00513R001755620012-2

KOROLENKO, Vladislav Tikhonovich; MAZURIN, Stepan Alekseyevich; TIKHONOVA, I., red.; BABAKHANOV, A., tekhn. red.

[Sorgo and its cultivation in Uzbekistan] Sorgo i ego vozdelyvanie v Uzbekistane. Tashkent, Gosizdat UzSSR, 1962. 95 p. (MIRA 17:1)

APPROVED FOR RELEASE: 07/16/2001 CIA-RDP86-00513R001755620012-2"

"APPROVED FOR RELEASE: 07/16/2001 CIA-RDP86-00513R001755620012-2

RUDAKOV, Grigoriy Mikhaylovich; IBRAIMOV, Rustem Ibraimovich; TSAY, Grigoriy Yakovlevich; TIKHONOVA, I., red.; ABBASOVA, T., tekhn.red.

[Mechanization of ambary hemp growing] Mekhanizatsiia vozdelyvaniia kenafa. Tashkent, Gosizdat UzSSR, 1963. 37 p. (MIRA 17:1)

APPROVED FOR RELEASE: 07/16/2001 CIA-RDP86-00513R001755620012-2"

"APPROVED FOR RELEASE: 07/16/2001 CIA-RDP86-00513R001755620012-2

TIKHONOVA, I., red.; SALAKHUTDINOVA, A., tekhn. red.

[A proud profession; S.T.Bakharev's crew of excavator operators] Gordaia professiia; opyt raboty brigady ekskavatorshchika S.T.Bakhareva. Tashkent, Gos.izd-vo Uzbekskoi SSR, 1961. 14 p. (MIRA 15:1)

1. Uzbek S.S.R. Ministerstvo vodnogo khozyaystva.
(Fergana—Earthwork)

APPROVED FOR RELEASE: 07/16/2001 CIA-RDP86-00513R001755620012-2"

"APPROVED FOR RELEASE: 07/16/2001 CIA-RDP86-00513R001755620012-2

ZIYADULLAYEV, Said Karimovich, kand.ekonom.nauk; ZAYKO, G.I., otv.red.; TIKHONOVA, I., red.; MEL'NIKOV, A., tekhred.

[The years of great achievements] Gody bol'shikh dostizhenii. Tashkent, Gos.izd-vo Uzbekskoi SSR, 1960. 61 p. (MIRA 14:2)

(Uzbekistan--Economic conditions)

APPROVED FOR RELEASE: 07/16/2001 CIA-RDP86-00513R001755620012-2"

"APPROVED FOR RELEASE: 07/16/2001 CIA-RDP86-00513R001755620012-2

KORBUT, I.; SMIRNOVA, Z.; TIKHONOVA, L., red.; ABBASOV, T., tekhred.

[For high crop yields and low cost of production] Za vysokie urozhai i nizkuiu sebestoimost'; kolkhoz "Politotdel" Verkhne-Chirchikskogo raiona Tashkentskoi oblasti. Tashkent, Gos.izd-vo Uzbekskoi SSR, 1960. 33 p. (MIRA 14:12)
(Tashkent Province--Crop yields)

APPROVED FOR RELEASE: 07/16/2001 CIA-RDP86-00513R001755620012-2"

"APPROVED FOR RELEASE: 07/16/2001 CIA-RDP86-00513R001755620012-2

SPIRIDONOV, P.V.; MIKHAYLOVSKIY, N.M.; TIKHONOVA, I., red.;
SALAKHUTDINOVA, A., tekhn.red.

[Handbook for the repair of cotton machines] Spravochnik po remontu khlopkovykh mashin. Tashkent, Gos.izd-vo Uzbekskoi SSR, 1960. 181 p. (MIRA 14:1)
(Cotton machinery--Maintenance and repair)

APPROVED FOR RELEASE: 07/16/2001 CIA-RDP86-00513R001755620012-2"

"APPROVED FOR RELEASE: 07/16/2001 CIA-RDP86-00513R001755620012-2

DAO TKHE TUAN; BELOV, A.I., kand. sel'khoz. nauk, dots., red.; TIKHONOVA, I., red.; SALAKHUTDINOVA, A., tekhn. red.

[Origin, systematics, and ecology of rice] Proiskhozhdenie, sistematika i ekologiia risa. Pod red. A.I.Belova. Tashkent, Gos. izd-vo Uzbekskoi SSR, 1960. 82 p. (MIRA 14:8)
(Rice)

APPROVED FOR RELEASE: 07/16/2001 CIA-RDP86-00513R001755620012-2"

"APPROVED FOR RELEASE: 07/16/2001 CIA-RDP86-00513R001755620012-2

KOSHEVOY, M.A.; TIKHONOVA, I., red.; SALAKHUTDINOVA, A., tekhn.red.

[Developing karakul sheep breeding in Uzbekistan] Razvitie karakulevodstva v Uzbekistane. Tashkent, Gos.izd-vo Uzbekskoi SSR, 1960. 28 p. (MIRA 14:3)
(Uzbekistan--Karakul sheep)

APPROVED FOR RELEASE: 07/16/2001 CIA-RDP86-00513R001755620012-2"

"APPROVED FOR RELEASE: 07/16/2001 CIA-RDP86-00513R001755620012-2

GORBUNOV, V.P.; TIKHONOVA, I., red.; BAKHTIYAROV, A., tekhn. red.

[Basic corn vaieties grown in Tashkent Province] Osnovnye sorta kukuruzy; vozdelyvaemye v Tashkentskoi oblasti. Tashkent, Gosizdat UzSSR, 1962. 28 p. (MIRA 16:4)
(Tashkent Province--Corn (Maize))--Varieties)

APPROVED FOR RELEASE: 07/16/2001 CIA-RDP86-00513R001755620012-2"

"APPROVED FOR RELEASE: 07/16/2001 CIA-RDP86-00513R001755620012-2

GENUSOV, A.Z.; KIMBERG, N.V., kand. sel'khoz. nauk; KOCHUBEY, M.I.; SHUVALOV, S.A.; TIKHONOVA, I., red.

[Soils of the Uzbek S.S.R.] Pochvy Uzbekskoi SSR. Tashkent, Izd-vo "Uzbekistan." Vol.3. 1964. 294 p. (MIRA 18:3)

1. Akademiya nauk Uzbekskoy SSR, Tashkent. Institut pochvovedeniya.

APPROVED FOR RELEASE: 07/16/2001 CIA-RDP86-00513R001755620012-2"

"APPROVED FOR RELEASE: 07/16/2001 CIA-RDP86-00513R001755620012-2

REVKOV, G.A., kand. tekhn.nauk; PRONIN, B.A., dots., kand. tekhn. nauk, retsenzent; ROZENBAUM, B.S., red.; TIKHONOVA, I.I., tekhn. red.; KOGAN, F.L., tekhn. red .

[Soviet-made variable-speed gears]Otechestvennye variatory skorostei. Moskv , TSentr. in-t nauchno-tekhn.informatsii mashinostroeniia, 1960. 94 p. (MIRA 15:7)

(Gearing)

APPROVED FOR RELEASE: 07/16/2001 CIA-RDP86-00513R001755620012-2"

"APPROVED FOR RELEASE: 07/16/2001 CIA-RDP86-00513R001755620012-2

TIKHONOVA I. A.

Excerpta Medica 8/4 sec 6 April 54 Internal Medicine

1289. TIKHONOVA I. A. *The diagnostic value of bone-marrow culture in typhoid fever (Russian text) KLIN. MED. (Mosk.) 1953, 31/3 (76-78) Tables 2

Samples of 0.5 - 1.0 ml. of bone-marrow obtained by sternal puncture from 110 typhoid and paratyphoid patients were incubated in bile broth simultaneously with blood cultures (8-10 ml. in 50 ml. bile broth) from the same patients. In the majority of cases an abundant growth of typhoid organisms was obtained after 16-24 hr. Positive results were also seen when one drop of bone marrow was placed on 'Bactar J' plates. In general, the culture was positive in 77% of typhoid patients as compared with 46.4% positive results obtained from blood. The value of this method of culture in mild cases of typhoid is stressed.

Anigstein - Galveston (XX, 4, 6)

Clinic Infectious Diseases, Voronezh Med. Inst.

APPROVED FOR RELEASE: 07/16/2001 CIA-RDP86-00513R001755620012-2"

"APPROVED FOR RELEASE: 07/16/2001 CIA-RDP86-00513R001755620012-2

LEONT'YEV, Anatoliy Aleksandrovich; TIKHONOVA, I.S., red.; BABAKHANOV, A., tekhn. red.

[Sandy deserts in Central Asia and their improvement by afforestation] Peschanye pustyni Srednei Azii i ikh lesomeliorativnoe osvoenie. Tashkent, Gos.izd-vo UzSSR, 1962. 158 p. (MIRA 16:4)

(Soviet Central Asia--Sandy soils)
(Soviet Central Asia--Afforestation)

APPROVED FOR RELEASE: 07/16/2001 CIA-RDP86-00513R001755620012-2"

"APPROVED FOR RELEASE: 07/16/2001 CIA-RDP86-00513R001755620012-2

TIKHONOVA, I. T.

"The Assimilation of Nutrient Substances by Plant Roots From Soils in Relation to Their Dampness." Cand Agr Aci, Soil Inst imeni V.V. Dokuchayev, Acad Sci USSR, Moscow, 1955. (KL, No 12, May 55)

SO: Sum Np. 670, 29 Sep 55 - Survey of Scientific and Technical Dissertations Defended at USSR Higher Educational Institutions (15)

APPROVED FOR RELEASE: 07/16/2001 CIA-RDP86-00513R001755620012-2"

"APPROVED FOR RELEASE: 07/16/2001 CIA-RDP86-00513R001755620012-2

TIKHONOVA, I.V.; KOZLOWSKAYA, L.N.; RUDENKO, N.I.

Heat-resistant foam rubber. Biul. tekh.-ekon. inform. Gos. nauch.-issl. inst. nauch. i tekh. inform. 17 no.2:18-20 '64. (MIRA 17:6)

APPROVED FOR RELEASE: 07/16/2001 CIA-RDP86-00513R001755620012-2"

"APPROVED FOR RELEASE: 07/16/2001 CIA-RDP86-00513R001755620012-2

TIKHONOVA, I. V.

30178

Opryedyelyeniye atsyetonia v prisutstuii atsyetofyenona. Zhurnal prikl. Khimii, 1949, No. 9, C. 1014-20.--Bibliogr: 6 nazv

SO: LETOPIS' NO. 34

APPROVED FOR RELEASE: 07/16/2001 CIA-RDP86-00513R001755620012-2"

"APPROVED FOR RELEASE: 07/16/2001 CIA-RDP86-00513R001755620012-2

TIKHONOVA, K. A.

Theory and Methods of Evaluation of Measurements

Dissertation: "Experimental Investigations of the Precision of Various Methods of Systematic Determination of Control Points for Ground Stereophotogrammetric Pictures in Hydraulic Engineering Surveys." Cand Tech Sci, Moscow Inst of Engineers of Engineers of Geodesy, Aerial Photography and Cartography, 2 Apr 54. (Vechernyaya Moskva Moscow 23 Mar 54)

SO: SUM 213, 20 Sep 1954

APPROVED FOR RELEASE: 07/16/2001 CIA-RDP86-00513R001755620012-2"

"APPROVED FOR RELEASE: 07/16/2001 CIA-RDP86-00513R001755620012-2

TIKHONOVA, L. G.

"Analysis of Various Theories of Cylindrical Shells." Thesis for degree of Cand. Physico-mathematical Sci. Sub. 24 Jun 49, Inst of Mechanics, Acad Sci USSR.

[redacted] Summary 82, 18 Dec 52, Dissertations Presented For Degrees in Science and Engineering in Moscow in 1949. From Vechernyaya Moskva. Jan-Dec 1949.

APPROVED FOR RELEASE: 07/16/2001 CIA-RDP86-00513R001755620012-2"

"APPROVED FOR RELEASE: 07/16/2001 CIA-RDP86-00513R001755620012-2

TIKHONOVA, L. G.

"A Cylindrical Shell Compressed at the Center by Two Forces,"
by L. G. Tikhonova, Candidate of Technical Sciences, Mekhanika,
No 50, Oborongiz, Moscow, 1956, pp 245-260

The problem of the effect of two concentrated forces, centrally applied, on a finite and infinite length cylindrical tube, was previously solved by the integration of approximate equations of cylindrical shells. Tikhonova presents an exact solution to this problem and compares her results with the approximate solutions.

Sum 1274

APPROVED FOR RELEASE: 07/16/2001 CIA-RDP86-00513R001755620012-2"

"APPROVED FOR RELEASE: 07/16/2001 CIA-RDP86-00513R001755620012-2

1ST AND 2ND ORDERS

PROCESSES AND PROPERTIES INDEX

A

M

Sa-145. Concerning Stability of Crystal Lattices. (In Russian.) V. Zhdanov and L. Tikhonova. *Zhurnal Eksperimental'noi i Teoreticheskoi Fiziki* (Journal of Experimental and Theoretical Physics), v. 18, June 1948, p. 552-558.

The stability of monoatomic cubic face-centered lattices under unilateral tensile and compressive stresses. The destruction of the lattice is shown to possess different characteristics under tension and under compression stress; that is, its resistance to compression stress is considerably less than to tension.

ASM-SLA METALLURGICAL LITERATURE CLASSIFICATION

APPROVED FOR RELEASE: 07/16/2001 CIA-RDP86-00513R001755620012-2"

"APPROVED FOR RELEASE: 07/16/2001 CIA-RDP86-00513R001755620012-2

CA TIKHONOVA, L.

2

Stability of crystal lattices. V. A. Zhdanov and L. Tikhonova (Tomsk State Univ.). *Zhur. Eksptl. Teoret. Fiz.* 18, 552-8(1948).—By the criterion of pos. free energy expressed as a quadratic function of the strain components of the lattice, tantamount to 6 conditions of stability expressed through moduli of elasticity, a monoat. cubic face-centered crystal lattice is shown to offer considerably less resistance to one-aided compression along one edge of the elementary cell than to the corresponding tension.

N. Thon

APPROVED FOR RELEASE: 07/16/2001 CIA-RDP86-00513R001755620012-2"

"APPROVED FOR RELEASE: 07/16/2001 CIA-RDP86-00513R001755620012-2

M

3

On the Stability of Crystal Lattices. V. Zhdanov and L. Tikhonova (*Zhur. Eksper. Teoret. Fiziki*, 1948, 18, (6), 552–558). [In Russian]. On the assumption that the interaction energy for two particles is given by an expression of the form $(-A/r^6 + B/r^{12})$ (r being the distance between them), the stability of a f.c.c. crystal lattice of such particles under uniaxial tension or compression along a cube axis has been considered. It has been shown that the lattice is stable for extension or compression to axial ratios between 0·85 and 1·3; on the assumed interaction energy, a b.c.c. lattice is unstable. The lattice stress/strain curve agrees substantially with that calculated by Born and Farth (*Proc. Camb. Phil. Soc.*, 1942, 38, 434), except that it shows a lower resistance to compressive stress.—G. R. H.

Apr. 1952

APPROVED FOR RELEASE: 07/16/2001 CIA-RDP86-00513R001755620012-2"

"APPROVED FOR RELEASE: 07/16/2001 CIA-RDP86-00513R001755620012-2

1ST AND 2ND ORDERS

3RD AND 4TH ORDERS

PROCESSES AND PROPERTIES INDEX

548.7 : 539.411/.412 — 82 4025

Tenacity of crystal lattices. ZHDANOV, V., AND TUKHONOVA, L. J. Exp. Theor. Phys., 10, 552-8 (June, 1948) In Russian.—The tenacity of a 1-atomic cubic face-centred crystal lattice in unilateral tension and compression is considered, and the intrinsic difference of tensile and compressive disruption is shown. Evidence of this is found in the considerably smaller resistance of the lattice to compression than to tensile stress. A.

ASM-SLA METALLURGICAL LITERATURE CLASSIFICATION

APPROVED FOR RELEASE: 07/16/2001 CIA-RDP86-00513R001755620012-2"

"APPROVED FOR RELEASE: 07/16/2001 CIA-RDP86-00513R001755620012-2

Glebov, S. V., and Tikhonova, L. A. Refractory materials for boiler grates with liquid slag capping. *Ogneupory*, 8 [10] 529-37 (1940).—Refractory cements to be used as protective coatings for the water tubes of the cooling screens in boiler grates with liquid slag removal have as yet received little attention. The authors have investigated a number of mixtures in the laboratory and in an experimental grate burning high ash second-grade pulverized coal. Chemical and physicochemical properties are tabulated of cements containing andalusite, fire clay grog-andalusite, chrome-magnesite, silicon carbide, and fire-clay grog of various gradings. A chrome-magnesite mixture bonded with aluminous cement is recommended for those parts of the screens exposed to particularly severe conditions and two fire clay grog aluminous cement mixtures are suggested for other positions. Refractory mixtures for filling the Bailey screen plates (see *Bull. Am. Ceram. Soc.*, 17, 55 (1938)), were also studied. The filling body from imported American plates was subjected to granulometric and chemical analysis and was successfully imitated in the laboratory; two chrome magnesite mixtures bonded with fire clay were found to be equally successful in the experimental grate.

APPROVED FOR RELEASE: 07/16/2001 CIA-RDP86-00513R001755620012-2"

"APPROVED FOR RELEASE: 07/16/2001 CIA-RDP86-00513R001755620012-2

Glebov, S. V., and Tikhonova, L. A. REFRACTORY MATERIALS FOR BOILER GRATES WITH LIQUID SLAG TAPPING. *Ogneupory*, 8 [10] 529-37 (1940).—Refractory cements to be used as protective coatings for the water tubes of the cooling screens in boiler grates with liquid slag removal have as yet received little attention. The authors have investigated a number of mixtures in the laboratory and in an experimental grate burning high ash second grade pulverized coal. Chemical and physicochemical properties are tabulated of cements containing andalusite, fire-clay grog-andalusite, chrome magnesite, silicon carbide, and fire-clay grog of various gradings. A chrome-magnesite mixture bonded with aluminous cement is recommended for those parts of the screens exposed to particularly severe conditions and two fire-clay grog aluminous cement mixtures are suggested for other positions. Refractory mixtures for filling the Bailey screen plates (see *Bull. Am. Ceram. Soc.*, 17, 55 (1938)), were also studied. The filling body from imported American plates was subjected to granulometric and chemical analysis and was successfully imitated in the laboratory; two chrome magnesite mixtures bonded with fire clay were found to be equally successful in the experimental grate.

APPROVED FOR RELEASE: 07/16/2001 CIA-RDP86-00513R001755620012-2"

"APPROVED FOR RELEASE: 07/16/2001 CIA-RDP86-00513R001755620012-2

C. A.

Selection and test of refractory materials resistant to fluorides and hydrogen fluoride. S. V. Glebov and L. A. Tikhonova. *Ogneupory* 15, 112-26(1950).—Materials were tested by heating (1) fluorite and a mixt. of fluorite and nephehline in a cavity made in the refractory, (2) same materials in the presence of steam in a tank made of the refractory, and (3) the refractory in a tubular elec. furnace in the presence of air, HF, and steam. Pure molten CaF_2 at 1500° had a stronger action than a mixt. of CaF_2 and nepheline at 1200°. The action of the mixt. of air, HF, and steam increased with rising temp. and with increasing concn. of HF and steam. Corrosion by CaF_2 was detd. not only by the reaction of F but also by the formation of CaO which reacted with acid oxides at high temps. Best resistance was shown by magnesite brick and fused mullite. Fused mullite decompd. somewhat in a thin surface layer but showed no penetration. Comparative evaluation was difficult because of the absence of quant. data characterizing the destruction, and the specific behavior of different types of refractories under the action of HF + H_2O mixt. (16-18% concn. and temp. 1400°). Satisfactory resistance was shown by high-Al_2O_3 and multi-grog shapes but it is possible that at higher temps. and concns. of HF they would fail. Optical consts. of new type formations in magnesite refractories were detd. Chem. compn. was not detd.

B. Z. K.

APPROVED FOR RELEASE: 07/16/2001 CIA-RDP86-00513R001755620012-2"

"APPROVED FOR RELEASE: 07/16/2001 CIA-RDP86-00513R001755620012-2

High-alumina lightweight refractories from diaspore concentrate. A. K. Karelit, L. A. Tikhonova, and Z. I. Latyshova. *Огнеупоры*, 14 [10] 454-58 (1949). Starting materials were Lyubytin clay (1730°C.) and diaspore concentrate (1850°). The concentrate contained small amounts of pyrophyllite and other minerals (not listed) and was finely powdered, with residues of 4 to 6% and 30 to 35% on sieves of 4900 and 10,000 openings cm.², respectively. The concentrate had no plasticity when moistened with water and had a maximum shrinkage of 2% when fired at 1400° to 1600°. Because of its high dispersion, the concentrate could be used chiefly as a grog and only partly without prior firing. Composition of the concentrate was SiO_2 22.16, TiO_2 1.24, Al_2O_3 61.94, Fe_2O_3 0.42, CaO 0.70, MgO 0.12, K_2O + Na_2O 0.41, SO_3 1.26, and ignition loss 12.38%. The clay analyzed SiO_2 46.5, Al_2O_3 + TiO_2 38.2, Fe_2O_3 1.88, and ignition loss 11.6%. Grog was made by firing at 1460° semidry-pressed briquettes of 80% concentrate and 20% clay. Water absorption of the grog was 24.7%, and compressive strength was 124 kg./cm.². The grog was ground to give a maximum grain size of 5 mm.; residue on a 3-mm. sieve was 10%, and about 60% of the grains were 0.5 mm. The clay bond had a maximum grain size of 2 mm., and the sawdust passed a 3- to 4-mm. sieve. A mix was prepared from clay 41, diaspore grog 26, unfired concentrate 15, and sawdust 18%. Moisture content was adjusted at 28%. After 1 to 2 weeks the various shapes were hand formed, dried naturally, and fired in a periodic kiln at 1480° and 1400°. Compressive strength of the brick was as high as 115 kg./cm.², reheat shrinkage was 1.2%, and heat resistance was 10 heat-shock cycles. B. Z. K.

ASM-SLA METALLURGICAL LITERATURE CLASSIFICATION

APPROVED FOR RELEASE: 07/16/2001 CIA-RDP86-00513R001755620012-2"

"APPROVED FOR RELEASE: 07/16/2001 CIA-RDP86-00513R001755620012-2

25(1) PHASE I BOOK EXPLOITATION SOV/1788

Ogneupory dlya chernoy metallurgii; sbornik statey (Refractories in Ferrous Metallurgy; Collection of Articles) Moscow, Metallurgizdat, 1958. Errata slip inserted. 4,000 copies printed.

Ed.: B. I. Gavrish, Engineer; Ed. of Publishing House: I. P. Zirunnov; Tech. Ed.: A. I. Karasev.

PURPOSE: This book is intended for engineers and technicians working in ferrous metallurgy.

COVERAGE: The book consists of 20 articles on the development and use of refractories in the Soviet metallurgical industry. B. I. Gavrish, in the first paper, presents the prospects for development and research projects for the period 1959-1965. He emphasizes development of refractory plants in the eastern part of the USSR. In general the articles deal with recent developments in basic and acidic refractories for blast and open hearth furnaces, and for the lining of ladles and special equipment used in continuous casting and in vacuum treatment of steel. A. S. Berezhnoy discusses the technology of manufacturing magnesite and forsterite refractories which frequently replace Dinas brick and fire clay. Several authors state that good results were obtained with

Card 1/5

periclase-spinell brick and with bricks made of magnesium and chromite compounds. The application of new refractories, insulating materials, high-temperature mortars, binding media, and cements, combined with advanced techniques in lining furnaces, are said to have more than doubled the time intervals between relining and overhauling furnaces. O. M. Margulis and A. G. Karasev discuss the use of "tagged atoms" to determine the degree of contamination of steel by refractory-lining particles. N. S. Lesnyak describes the production of refractories by the semidry pressing method employed at the Nizhne-Tagil' plant, and I. S. Haynarski and V. D. Teigler cover the use of lightweight Dinas bricks in industrial furnaces. The last paper written by A. S. Makarychev compares and evaluates the physical properties and service life of fire-clay bricks, forsterite bricks, Dinas bricks and bricks with high alumina content. Graphs, diagrams, and photographs accompany the papers. For references, see Table of Contents.

TABLE OF CONTENTS:

Refractories in Ferrous Metallurgy (Cont.) SOV/1788

Pasarin, A. P. Periclase-spinel Brick 38

Frenkel', A. S. High-refractory Products for All-basic Open Hearths and Ways of Increasing Durability [There are 12 references, 9 of which are Soviet, 2 English, 1 German] 55

Pirogov, A.A. Air Setting High-refractory Magnesium Cement [8 Soviet references] 86

Bukrov, N.P., and I. Sh. Shvartsman. Experience With Heat Insulation of the Magnesium Chromite Roof of an Open Hearth Furnace 99

D'yachkov, P.N., and Z.S. D'yachkova. Magnesium Chromite Products for Vacuum Treatment of Transformer Steel in Ladles [5 Soviet references] 114

Uzberg, A.I. Reinfired Magnesite Ladle Liners 122

Glebov, S.V., and L.A. Tikhonova. Lining the Hearth Bottom and the Hearth in Modern Blast Furnaces 132
[There are 25 references, 19 of which are Soviet, 3 English, 2 German, and 1 Polish]

Card 3/5

7

APPROVED FOR RELEASE: 07/16/2001 CIA-RDP86-00513R001755620012-2"

"APPROVED FOR RELEASE: 07/16/2001 CIA-RDP86-00513R001755620012-2

PROCESSES AND PROPERTIES INDEX

C

Refractory lining for liquid-slag boiler furnaces. S. V. GLEBOV AND L. A. TIKHONOVA. *Ogneupory*, 1940, No 10, pp. 529-37; *Khim. Referat. Zhur.*, 4 [5] 80 (1941); *Chem. Abstracts*, 37, 6426 (1943).—Experimental data are given on the selection of refractory concretes for the lining and of Bailey blocks. Bailey blocks made of chromite and magnesite or corundum, both with clay binding, gave good results. The chromite-magnesite concrete on an alumina-cement base was best for the separating screen, and the fine-grain chamotte concretes on an alumina-cement base were best for the lateral and vault screens.

ASM-SLA METALLURGICAL LITERATURE CLASSIFICATION

APPROVED FOR RELEASE: 07/16/2001 CIA-RDP86-00513R001755620012-2"

"APPROVED FOR RELEASE: 07/16/2001 CIA-RDP86-00513R001755620012-2

1ST AND 2ND ORDERS — 3RD AND 4TH ORDERS

PROCESSES AND PROPERTIES INDEX

C

Selection and test of refractory materials resistant to fluorides and hydrogen fluoride. S. V. Gerbov and L. A. Tikhonova. *Огнеупоры*, 15 [3] 112-20 (1950). Materials were tested by heating (1) fluorite and a mixture of fluorite and nepheline in a cavity made in the refractory, (2) the same materials in the presence of steam in a tank made of the refractory, and (3) the refractory in a tubular electric furnace in an atmosphere of air, hydrogen fluoride, and steam. The action of pure molten CaF_2 at 1500°C was stronger than that of a mixture of CaF_2 and nepheline at 1200°. The action of a mixture of air, HF, and steam was intensified with rising temperature and with rise in concentration of HF and steam in the mixture. In the case of CaF_2, the process of corrosion is determined not only by the reaction of fluorine but also by the formation of CaO, which has a high activity with regard to acid oxides at high temperatures. The best resistance was shown by magnesite brick (especially for brick of 14 to 15% porosity from fused magnesite) and, to a lesser extent, by fused mullite. Fused mullite decomposed somewhat in a thin surface layer but showed no penetration of the melt within. Because of the specific behavior of different types of refractories under the action of a HF + H_2O mixture (10 to 18% concentration and temperature of 1400°) and the absence of definite quantitative data characterizing the destruction, it is difficult to make a comparative evaluation of the resistance; the most resistant, however, can be considered fused mullite and magnesite refractories; satisfactory resistance was also shown by high-alumina and multigrog shapes, but it is possible that at higher temperatures and higher concentrations of HF they will be destroyed rapidly. New type formations were observed after tests with magnesite refractories, optical constants of new formations were determined but the chemical composition could not be established due to the difficulty of separation. Their composition and role in increasing the resistance of refractories is to be studied. Photomicrographs. B/K

7

ASM-SLA METALLURGICAL LITERATURE CLASSIFICATION

APPROVED FOR RELEASE: 07/16/2001 CIA-RDP86-00513R001755620012-2"

"APPROVED FOR RELEASE: 07/16/2001 CIA-RDP86-00513R001755620012-2

C1

19

High-alumina lightweight refractories from diaspore

concentrate. A. K. Karkit, L. A. Tikhonova, and Z. I. Latysheva. *Огнеупоры* 14, 484-8(1949).—Materials used were Lyubytin clay (1730°) and diaspore concentrate (1880°). The concentrate contained small amts. of pyrophyllite and other minerals (not listed) and was finely pound., with residues of 4-6% and 30-35% on sieves of 4900 and 10,000 openings/sq. cm., resp. The concentrate had no plasticity and a max. shrinkage of 2% when fired at 1400-1600°. Because of its high dispersion, the concentrate could be used chiefly as a grog and only partly without prior firing. Compn. of the concentrate was: SiO_2 22.16, TiO_2 1.24, Al_2O_3 61.94, Fe_2O_3 0.42, CaO 0.76, MgO 0.12, K_2O + Na_2O 0.41, SO_3 1.36, ignition loss 12.38%. The clay analysed SiO_2 46.5, Al_2O_3 + TiO_2 38.2, Fe_2O_3 1.88, ignition loss 11.6%. Grog was made by firing at 1460° semidry pressed briquets of 80% concentrate and 20% clay. Water absorption of grog was 24.7% and compressive strength 124 kg./sq. cm. Grog was ground to give a max. grain size of 5 mm., residue on 3-mm. sieve was 10%, and grains 0.5 mm. were about 60%. Clay bond had a max. grain size of 2 mm. and sawdust passed a 3-4-mm. sieve. Mix was prepd. from clay 41, diaspore grog 26, unfired concentrate 15, and sawdust 18%. Moisture content was adjusted at 28%. After 1-2 weeks the various shapes were hand-formed, dried naturally, and fired in a periodic kiln at 1460 and 1660°. Compressive strength of brick was as high as 115 kg./sq. cm.; refract shrinkage, 1.2%; heat resistance, 10 heat-shock cycles.

B. Z. Kamich

APPROVED FOR RELEASE: 07/16/2001 CIA-RDP86-00513R001755620012-2"

"APPROVED FOR RELEASE: 07/16/2001 CIA-RDP86-00513R001755620012-2

1420. HIGH ALUMINA LIGHT WEIGHT REFRACTORY FROM DIAPORE CONCENTRATE. Karklit, AK Tikhonova, LA and Latysheva ZI (Ogneupory (Refractories), oct. 1949, vol. 14, 454-458). Describes best methods of obtaining above, including correct concentrations of components, and optimum conditions of mixing and firing. Influences of charcoal and of anthracite in the mass as burn out additions are discussed. Physical constants and thermal characteristics are tabulated.

BLR

APPROVED FOR RELEASE: 07/16/2001 CIA-RDP86-00513R001755620012-2"

"APPROVED FOR RELEASE: 07/16/2001 CIA-RDP86-00513R001755620012-2

PROCESSES AND PROPERTIES INDEX

2-2

High-Alumina Light-Weight Refractory From Diaspore Concentrate. (In Russian.) A. K. Karklit, L. A. Tikhonova, and Z. I. Latysheva. *Ogneupory* (Refractories), v. 14, Oct. 1949, p. 454-458.

Describes best methods of obtaining above, including correct concentrations of components, and optimum conditions of mixing and firing. Influences of charcoal and of anthracite in the mass as burn-out additions are discussed. Physical constants and thermal characteristics are tabulated.

ASM-SLA METALLURGICAL LITERATURE CLASSIFICATION

APPROVED FOR RELEASE: 07/16/2001 CIA-RDP86-00513R001755620012-2"

"APPROVED FOR RELEASE: 07/16/2001 CIA-RDP86-00513R001755620012-2

TIKHONOVA, L.A.

GRAMENITSKIY, I. M., IVANOVSKAYA, I. A., KANALEK, T., MARTINOV, A. S., OKHRIMENKO, L. S., PROKESH, A., STRUGALSKIY, S. S., TIKHONOVA, L. A. and CHUVILO, I. V.

"Neutral Strange Particles Production on Xenon Nuclei in the 9 Gev/C π^- Meson Beam"

report presented at the Intl. Conference on High Energy Physics, Geneva, 4-11 July 1962

Joint Institute for Nuclear Research
Laboratory of High Energies

APPROVED FOR RELEASE: 07/16/2001 CIA-RDP86-00513R001755620012-2"

"APPROVED FOR RELEASE: 07/16/2001 CIA-RDP86-00513R001755620012-2

GRAMENITSKIY, I.N.; KANAREK, T.; MAL'TSEV, V.M.; PROKEISH, A.; TIKHONOVA, L.A.

Quasi-elastic π^--n-interaction at an energy of 9Bev. IAd. fiz. 1 no.1: 113-121 Ja '65. (MIRA 18:7)

1. Ob"yedinennyy institut yadernykh issledovaniy.

APPROVED FOR RELEASE: 07/16/2001 CIA-RDP86-00513R001755620012-2"

"APPROVED FOR RELEASE: 07/16/2001 CIA-RDP86-00513R001755620012-2

and for specialists in refractory manufacture and application.

COVERAGE: The manual deals with State standards and technical specifications for refractory ware, materials, and stock used in the construction and repair of furnaces used for smelting, heating, calcination, and distillation, and of fire chambers for boilers and dryers. The specifications also cover other thermal units used for processing under high thermal conditions, but do not include all refractory materials since approximately 10% of them have never been standardized. This edition has been enlarged by the inclusion of data on cast refractories and carbonaceous ware, as well as additional data on refractory stock, magnesite ware, forsterite ware, and metallurgical filler powders. The lists included in the manual contain State standards and specifications approved as late as Mar 1960. No personalities are mentioned. There are no references.

APPROVED FOR RELEASE: 07/16/2001 CIA-RDP86-00513R001755620012-2"

"APPROVED FOR RELEASE: 07/16/2001 CIA-RDP86-00513R001755620012-2

TABLE OF CONTENTS [Abridged]:

Foreword (Marants, A. G.) 10

Introduction (Fel' dgandler, G. G.) 11

A. REFRACTORY AND HIGHLY REFRACTORY WARES

I. Chamotte and Semiacid Ware (Zegzhda, V. P.) 15

II. High-Alumina Ware (L. A. Tikhonova) 107

III. Dinas Ware (Sokolov, V. I.) 125

IV. Lightweight Refractory Ware (Zegzhda, V. P.) 158

APPROVED FOR RELEASE: 07/16/2001 CIA-RDP86-00513R001755620012-2"

"APPROVED FOR RELEASE: 07/16/2001 CIA-RDP86-00513R001755620012-2

V. Fired Magnesite, Chrome-Magnesite, and Magnesite-Chromite Ware (Marants, A. G.) 161

VI. Unfired Magnesite, Chrome-Magnesite, and Magnesite-Chromite Ware (Rybnikov, V. A., Deceased) 191

VII. Forsterite and Talc-Magnesite Ware (Rybnikov, V. A., Deceased) 201

VIII. Mullite, Zirconium-Mullite, and "Bakorovyye" [basically of corundum, baddeleyite, and vitreous substances] (Electrosmelted, Cast Wares) (Marants, A. G.) 206

IX. Ware of Pure Aluminum and Zirconium Oxides (Marants, A. G., and L. D. Derevyanchenko) 210

APPROVED FOR RELEASE: 07/16/2001 CIA-RDP86-00513R001755620012-2"

"APPROVED FOR RELEASE: 07/16/2001 CIA-RDP86-00513R001755620012-2

X. Carborundum Ware: (Rybnikov, V. A., Deceased) 215

XI. Carborundum Electric Heaters and Resistors (Ohmic) (Gavrilov, A. G.) 217

XII. Carbonaceaous Ware: (Derevyanchenko, L. D.) 224

B. REFRACTORY AND HIGHLY REFRACTORY GROUND MATERIALS - POWDERS, MORTARS, COATINGS, AND PASTES (Karlit, A. K.)

I. Magnesite Baked Powder 244

II. Dolomite Powder 247

III. Mortars 249

APPROVED FOR RELEASE: 07/16/2001 CIA-RDP86-00513R001755620012-2"

"APPROVED FOR RELEASE: 07/16/2001 CIA-RDP86-00513R001755620012-2

IV. Various Ground Coatings, Pastes, and Materials 253

C. LUMP CHAMOTTE AND REFRACTORY SCRAP (Marants, A. G., L D. Derevyanchenko, and E. A. Aksel' rad)

D. REFRACTORY RAW MATERIAL (Sarmin, A. P.)

I. Refractory Clays 270

II. Kaolins 281

III. Bauxites 284

IV. Quartzites, Quartz, and Quartz Sands 286

V. Magnesites 289

APPROVED FOR RELEASE: 07/16/2001 CIA-RDP86-00513R001755620012-2"

"APPROVED FOR RELEASE: 07/16/2001 CIA-RDP86-00513R001755620012-2

VI. Dolomites 292

VII. Chromite Ores 295

VIII. Dunites 297

E. SOME MATERIALS USED IN REFRACTORY MANUFACTURE TECHNOLOGY (Marants, A. G., L. D. Derevyanchenko, and E. A. Aksel' rad)

F. RULES FOR RECEIVING, STORING, AND TRANSPORTING REFRACTORY WARES (Marants, A. G., and L. D. Derevyanchenko)

Appendix No. 1. List of Standards for Testing Methods and Labeling Refractory Ware and Materials (Marants, A. G., and L. D. Derevyanchenko) 329

APPROVED FOR RELEASE: 07/16/2001 CIA-RDP86-00513R001755620012-2"

"APPROVED FOR RELEASE: 07/16/2001 CIA-RDP86-00513R001755620012-2

Appendix No. 2. Basic Conditions of the Instruction on the Order of Adjustment and Approval of Technical Specifications for Ferrous Metallurgy Products (Marants, A. G., and L. D. Derevyanchenko) 331

Appendix No. 3. List of Standards and Technical Specifications Used in the Manual 333

Appendix No. 4. Organizations Apportioning Funds for Ware and Materials Listed in the Handbook (Marants, A. G., and L. D. Derevyanchenko) 337

AVAILABLE: Library of Congress (TN677.S67)

JA/rsm/jk
1/22/62

Card 7/8

APPROVED FOR RELEASE: 07/16/2001 CIA-RDP86-00513R001755620012-2"

"APPROVED FOR RELEASE: 07/16/2001 CIA-RDP86-00513R001755620012-2

MARANTS, A.G.; ZEGZHD, V.P.; TIKHONOVA, L.A.; SOKOLOV, V.I.; RYBNIKOV, V.A. [deceased]; DEREVYANCHENKO, L.D.; KARKLIT, A.K.; AKSEL'RAD, E.A.; SARMIN, A.P.; FEL'DGANDLER, G.G., red.; MAKSIMOV, Ye.I., red. izd-va KARASEV, A.E., tekhn. red.

[Handbook of refractory materials, products, and raw materials; compiled accoriding to state standards and technical specifications] Spravochnik na ogneupornye izdeliia, materialy i syr'e. Sostavlen po gosudarstvennym standartam i tekhnicheskim usloviiam. Izd.2., ispr. i dop. Moskva, Gos. nauchno-tekhn. izd-vo lit-ry po chernoi i tsvetnoi metallurgii, 1961. 338 p. (MIRA 14:9)

1. Sotrudniki Vsesoyuznogo instituta ogneuporov (for all except Fel'dgandler, Maksimov, Karasev).
(Refractory materials—Standards)

APPROVED FOR RELEASE: 07/16/2001 CIA-RDP86-00513R001755620012-2"

"APPROVED FOR RELEASE: 07/16/2001 CIA-RDP86-00513R001755620012-2

TIKHONOVA, L.A.; GLEBOV, S.V.

Kyanite refractories made of minerals from the Keyvy deposits. (MLRA 10:7)
Ogneupory 22 no.6:252-260 '57.

1. Leningradskiy institut ogneuporov.
(Kola Peninsula--Kyanite)

APPROVED FOR RELEASE: 07/16/2001 CIA-RDP86-00513R001755620012-2"

"APPROVED FOR RELEASE: 07/16/2001 CIA-RDP86-00513R001755620012-2

ZAGZHDA, V.P.; TIKHONOVA, L.A.; SOKOLOV, V.I.; MARANTS, A.G.; RYBNIKOV, V.A.; KAZAKEVICH, S.S.; SARMIN, A.P.; GAVRILOV, A.I.; NOVIKOV, A.N.; NECHEPORENKO, M.A.; KAL'MOVA, Ye.A.; FEDOROV, G.A., redaktor; FEL'DGANDLER, G.G., redaktor; ROZENTSVEYG, Ya.D., redaktor izdatel'stva; MIKHAYLOVA, V.V., tekhnicheskiy redaktor

[Handbook on refractory elements and materials] Spravochnik na ogneupornye izdeliia, materialy i syr'e. Sostavlen po gosudarstvennym standartam i tekhnicheskim usloviiam. Moskva, Gos. nauchno-tekhn. izd-vo lit-ry po chernoi i tsvetnoi metallurgii, 1956. 195 p. (MLRA 10:2)

1. Russia (1923- U.S.S.R.) Ministerstvo chernoy metallurgii.
2. Leningradskiy institut ogneuporov. (for Zagzhda, Tikhonova, Sokolov, Marants, Rybnikov, Kazakevich, Sarmin, Gavrilov, Novikov, Nechepore nko, Kal'mova.

(Refractory materials)

APPROVED FOR RELEASE: 07/16/2001 CIA-RDP86-00513R001755620012-2"

"APPROVED FOR RELEASE: 07/16/2001 CIA-RDP86-00513R001755620012-2

TIKHONOV

Cyanite refractories from Kiev deposits. [illegible] nova and S. V. [illegible] *Огнеупоры* 22, 252-60 (1957). A cyanite deposit of exceptionally high quality is reported from Kiev. Analysis shows SiO_2 57.8, Al_2O_3 36.0, TiO_2 1.3, Fe_2O_3 1.5, CaO 0.42, MgO 0.50, Na_2O and K_2O 0.67%, m. 1680°; percentages of mineral components: cyanite 44.2, quartz 38.1, mica, staurolite, C and other minerals 19.7%.

H. L. Olin

APPROVED FOR RELEASE: 07/16/2001 CIA-RDP86-00513R001755620012-2"

"APPROVED FOR RELEASE: 07/16/2001 CIA-RDP86-00513R001755620012-2

TIKHONOVA, L. A.

Glebov, S. V., and Tikhonova, L. A. REFRACTORY MATERIALS FOR BOILER GRATES WITH LIQUID SLAG TAPPING. Ogneupory, 8 (10) 529-37 (1940).- Refractory cements to be used as protective coatings for the water tubes of the cooling screens in boiler grates with liquid slag removal have as yet received little attention. The authors have investigated a number of mixtures in the laboratory and in an experimental grate burning high ash second-grade pulverized coal. Chemical and physiochemical properties are tabulated of cements containing andalusite, fire-clay grog-andalusite, chrome-magnesite, silicon carbide, and fire-clay grog of various gradings. A chrome-magnesite mixture bonded with aluminous cement is recommened for those parts of the screens exposed to particularly severe conditions and two fire-clay grog aluminous cement mixtures are suggested for other positions. Refractory mixtures for filling the Bailey screen plates (see Bull. Am. Ceram. Soc., 17, 55 (1938), were also studied. The filling body from imported American plates was subjected to granulometric and chemical analysis and was successfully imitated in the laboratory; two chrome-magnesite mixtures bonded with fire clay were found to be equally successful in the experimental grate.

APPROVED FOR RELEASE: 07/16/2001 CIA-RDP86-00513R001755620012-2"

"APPROVED FOR RELEASE: 07/16/2001 CIA-RDP86-00513R001755620012-2

TIKHONOVA, L.A.

Sillimanite from Kyakhta deposits. Ogneuproy 25 no.6:255-260 '60. (MIRA 13:8)

1. Vsesoyuznyy institut ogneuporov.
(Sillimanite)

APPROVED FOR RELEASE: 07/16/2001 CIA-RDP86-00513R001755620012-2"

"APPROVED FOR RELEASE: 07/16/2001 CIA-RDP86-00513R001755620012-2

S/131/60/000/06/04/012
B015/B007

AUTHOR: Tikhonova, L. A.

TITLE: Sillimanites of the Kyakhtinskiy Deposit

PERIODICAL: Ogneupory, 1960, No. 6, pp. 255-260

TEXT: The aforementioned deposit is in the Buryatskaya ASSR, and was discovered by the Trust "Sibgeolnerud". Sillimanite slates were investigated by the Irkutskiy institut redkikh metallov (Irkutsk Institute of Rare Metals), the Vostochno-Sibirskiy filial AN SSSR (East Siberian Branch of the Academy of Sciences, USSR), and the Vsesoyuznyy institut ogneuporov (All-Union Institute of Fireproof Materials). The scheme for the preparation of sillimanite slates by means of the flotation method was worked out by Mekhanobr. In the present paper, the results obtained by investigation of the chemical and mineralogical composition, of the physical properties, the mullitization, and the technological characteristic features of the flotation-sillimanite concentrate of the Kyakhtinskiy deposit are given. The composition and the properties of sillimanite may be seen from Table 1, and the results obtained by the investigation of burned sillimanite samples

Card 1/2

APPROVED FOR RELEASE: 07/16/2001 CIA-RDP86-00513R001755620012-2"

"APPROVED FOR RELEASE: 07/16/2001 CIA-RDP86-00513R001755620012-2

Sillimanites of the Kyakhtinskiy Deposit S/131/60/000/06/04/012
B015/B007

are shown in Tables 2 to 6. The microscopic examinations were carried out by G. G. Mel'nikova. The temperature of decomposition of sillimanite according to the data of various research workers is given in Table 7, in which connection Tikhonova is mentioned. Table 8 lists the properties of sillimanite "fireclay bricks", and Table 9 shows the composition of some pastes. A Fig. shows the creep lines of various high-alumina refractories. There are 1 figure, 9 tables, and 6 references: 2 Soviet, 2 American, and 1 French.

ASSOCIATION: Vsesoyuznyy institut ogneuporov
(All-Union Institute of Fireproof Materials)

Card 2/2

APPROVED FOR RELEASE: 07/16/2001 CIA-RDP86-00513R001755620012-2"

"APPROVED FOR RELEASE: 07/16/2001 CIA-RDP86-00513R001755620012-2

AUTHORS: Glebov, S. V., Tikhonova, L. A. SOV/131-58-10-1/11

TITLE: Lining of Wells and Hearths of Modern Blast Furnaces (Futerovka leshchadi i gorna sovremennykh domennykh pechey)

PERIODICAL: Ogneupory, 1958, Nr 10, pp. 433-439 (USSR)

ABSTRACT: Increasing the diameter of blast furnaces, the blast pressure and the output of the furnaces puts greater stress on wells and hearths. In the USSR wells are lined with fire-bricks with a minimum joint-width of 0,5 mm so that the bricks warp in case of fast heating. Recently, carbon bricks with vertical extension joints up to 50 mm wide and filled with stamped carbon were used for wells. As to durability these blocks do not differ from fire-bricks. In figure a) a blast furnace with a capacity of 1513 cubic meters is shown whose well was lined with highly aluminiferous bricks with 62 % of Al_2O_3 and whose stack as well as the lower part and the hearth walls down to the cinder notch were lined with carbon blocks. In figure b) highly aluminiferous bricks with 45 % of Al_2O_3 were used instead of carbon blocks. This kind of lining proved to be excellent in actual use. Table 1 indica-

Card 1/2

APPROVED FOR RELEASE: 07/16/2001 CIA-RDP86-00513R001755620012-2"

"APPROVED FOR RELEASE: 07/16/2001 CIA-RDP86-00513R001755620012-2

tes the performance of aluminum silicates, table 2 that of carbon materials which were used for wells and hearths. In recent years the plants and scientific research institutes for refractory products have produced experimental samples of refractory kaolin products of a high quality (Fig 3). As to porosity and distortion temperatures, however, they do not meet the requirements. Because of the shortage of high-quality fire-bricks, highly aluminiferous products have to be used in wells and hearths.
There are 2 figures, 3 tables, and 26 references, 21 of which are Soviet.

ASSOCIATION: Leningradskiy institut ogneuporov (Leningrad Institute for Refractory Products)

APPROVED FOR RELEASE: 07/16/2001 CIA-RDP86-00513R001755620012-2"

"APPROVED FOR RELEASE: 07/16/2001 CIA-RDP86-00513R001755620012-2

TIKHONOVA, L. A. Cand Tech Sci -- (diss) "Study of the physico-chemical and technological ~~characteristics~~ properties of cyanites ~~in~~ of the Keyvskiye deposits and their application in the manufacture of refractory materials" Len, 1957. 14 pp with illustrations 20 cm. (Min of Higher Education USSR. Leningrad Order of Labor Red Banner ~~Engineering~~ Technological Inst im Lensovet). 100 copies (KL, 10-57, 103).

-13-

APPROVED FOR RELEASE: 07/16/2001 CIA-RDP86-00513R001755620012-2"

"APPROVED FOR RELEASE: 07/16/2001 CIA-RDP86-00513R001755620012-2

GRAMENITSKIY, I.M.; IVANOVSKAYA, I.A.; KANAREK, T.; [illegible], L.S.; PROKESH, A.; TIKHONOVA, L.A.

Study of the reaction $\pi + Xe \rightarrow \pi^- + \pi^0 + Xe$ involving 9 Gev./c primary π^--mesons. Zhur.eksp.i teor.fiz. 46 no.6:2023-2027 Je '64.

Ob"yedinennyy institut yadernykh issledovaniy. (MIRA 17:10)

APPROVED FOR RELEASE: 07/16/2001 CIA-RDP86-00513R001755620012-2"

"APPROVED FOR RELEASE: 07/16/2001 CIA-RDP86-00513R001755620012-2

AUTHOR: Grame [illegible] A. Tikhono-
va, L. A.

TITLE: Quasi-elastic [illegible]

SOURCE: Yadernaya fizika, v. 1, no. 1, 1965, 113-121

[illegible] attering, opti-

interaction, backward [illegible] attering

[illegible] was

Card 1/2

APPROVED FOR RELEASE: 07/16/2001 CIA-RDP86-00513R001755620012-2"

"APPROVED FOR RELEASE: 07/16/2001 CIA-RDP86-00513R001755620012-2

L 41717-65
ACCESSION NR: AP5007712

(1963) The optical characteristics of the [illegible] were determined as follows [illegible] $\gamma = 0.58 \cdot 10^{-11}$ cm^{-1}.

[illegible]

and [illegible]

ASSOCIATION: [illegible] Joint Institute for Nuclear Research

SUBMITTED: 25Jul64

NO REF SOV: 0[illegible]

OTHER: 007

Card 2/2

APPROVED FOR RELEASE: 07/16/2001 CIA-RDP86-00513R001755620012-2"

"APPROVED FOR RELEASE: 07/16/2001 CIA-RDP86-00513R001755620012-2

LOPATINSKIY, V.P.; SIROTKINA, Ye.Ye.; ANOSOVA, M.M.; TIKHONOVA, L.G.; PAVLOV, S.F.

Chemistry of carbazole derivatives. Part 24: Synthesis of some 9-alkylcarbazoles. Izv. TPI 126:58-61 '64. (MIRA 18:7)

APPROVED FOR RELEASE: 07/16/2001 CIA-RDP86-00513R001755620012-2"

"APPROVED FOR RELEASE: 07/16/2001 CIA-RDP86-00513R001755620012-2

NESMEYANOV, A.N.;GUSEVA, L.I.;TIKHONOVA, L.I.;ZABORSKIY, A.K.

Chemical state of atoms resulting from nuclear transformations. Dokl.AN SSSR 103 no.6:1041-1043 Ag '55. (MLRA 9:1)

1.Moskovskiy gosudarstvennyy universitet imeni M.V.Lomonosova. Predstavleno akademikom A.N.Frumkinym.
(Radiochemistry)

APPROVED FOR RELEASE: 07/16/2001 CIA-RDP86-00513R001755620012-2"

"APPROVED FOR RELEASE: 07/16/2001 CIA-RDP86-00513R001755620012-2

APPROVED FOR RELEASE: 07/16/2001 CIA-RDP86-00513R001755620012-2"

"APPROVED FOR RELEASE: 07/16/2001 CIA-RDP86-00513R001755620012-2

APPROVED FOR RELEASE: 07/16/2001 CIA-RDP86-00513R001755620012-2"

"APPROVED FOR RELEASE: 07/16/2001 CIA-RDP86-00513R001755620012-2

AUTHORS: Kabachnik, M. I., Medved', T. Ya., Kozlova, G. K., Balabukha, V. S., Senyavin, M. M., Tikhonova, L. I.

SOV/62-58-9-8/26

TITLE: Synthesis and Testing of the Complex-Forming Properties of Several Organophosphorus Compounds (Sintez i ispytaniya kompleksoobrazuyushchey sposobnosti nekotorykh fosforoorganicheskikh soyedineniy)

PERIODICAL: Izvestiya Akademii nauk SSSR. Otdeleniye khimicheskikh nauk, 1958, Nr 9, pp 1o7o - 1o75 (USSR)

ABSTRACT: After the discovery that the diaminocarboxylic acid series is highly active in forming complex compounds the authors of this paper became interested in studying the complexing properties of some α-aminoalkyl phosphinic acids and their derivatives. Only a few papers appear in the publications on this topic (Refs 3-6). The authors investigated the complexing properties of some aminoalkyl phosphinic acids which they had previously prepared as well as several ethylenediaminodiphosphinic acids. The investigations showed that in the reaction between

Card 1/2

APPROVED FOR RELEASE: 07/16/2001 CIA-RDP86-00513R001755620012-2"

"APPROVED FOR RELEASE: 07/16/2001 CIA-RDP86-00513R001755620012-2

Synthesis and Testing of the Complex-Forming Properties of Several Organophosphorus Compounds SOV/62-58-9-8/26

ethylenediamine and dialkyl phosphites and aldehydes (or ketones), esters of ethylenediaminodialkylphosphinic acids form. By saponifying these esters the free acids can be obtained. The complexing properties of the ethylenediaminodialkylphosphinic acids so prepared were tested chromatographically. Other aminoalkyl phosphinic acids previously prepared were also studied to determine their complexing properties. It was shown that the ethylenediaminodialkylphosphinic acids form stable complex compounds with ytterbium and yttrium. There are 2 tables and 7 references, 2 of which are Soviet.

ASSOCIATION: Institut elementoorganicheskikh soyedineniy Akademii nauk SSSR (Institute of Elemental-organic compounds, AS USSR)

SUBMITTED: February 14, 1957

Card 2/2

APPROVED FOR RELEASE: 07/16/2001 CIA-RDP86-00513R001755620012-2"

"APPROVED FOR RELEASE: 07/16/2001 CIA-RDP86-00513R001755620012-2

SOV/79-29-8-59/81

5(3)

AUTHORS: Yashunskiy, V. G., Vasil'yeva, V. F., Tikhonova, L. I., Shchukina, M. N.

TITLE: Substances With a Complex-forming Capacity. IV. Trans-1,2-diaminocyclohexene- and 1-Phenylethylenediamine-N,N,N',N'-tetraacetic Acids

PERIODICAL: Zhurnal obshchey khimii, 1959, Vol 29, Nr 8, pp 2709 - 2712 (USSR)

ABSTRACT: The authors previously reported on the synthesis and investigation of the complex-forming capacities of some alicyclic 1,2-diaminetetraacetic acids of a trans-configuration (Refs 1,2). In order to complement this series the compound (I) was synthesized. The initial product for the synthesis of this compound was the dimethyl ester of the cis-cyclohexene-(4)-dicarboxylic acid-1,2 obtained by the condensation of butadiene with the anhydride of maleic acid. When this cis-diester is heated with hydrazine hydrate without solvent the trans-dihydrazide forms (Ref 1). The latter was transformed according to Curtius into the dichlorohydrate of the hitherto

Card 1/3

APPROVED FOR RELEASE: 07/16/2001 CIA-RDP86-00513R001755620012-2"

"APPROVED FOR RELEASE: 07/16/2001 CIA-RDP86-00513R001755620012-2

Substances With a Complex-forming Capacity. IV. SOV/79-29-8-59/81
Trans-1,2-diaminocyclohexene- and 1-Phenylethylenediamine-N,N,N',N'-tetra-acetic Acids

unknown trans-1,2-diaminocyclohexene-(4) which was treated with an excess of chloroacetic acid in an alkaline medium which led to the compound (I). In order to investigate the influence of the substitutes on the complex-forming capacity of the complexons of the ethylenediaminetetraacetic acid series the compound (II) obtained from 1,2-diaminoethylbenzene by two different methods was synthesized (Ref 3, and Rodionov, Ref 4). The tetraacetic acid could only be synthesized by heating 1,2-diaminoethylbenzene with an excess of bromoacetic acid in the presence of caustic soda at 40°. Thus two compounds hitherto not described were synthesized: trans-1,2-diamino-cyclohexene-(4)-, and 1-phenylethylenediaminetetraacetic acid. The complex-forming capacity of the synthesized compounds was determined chromatographically (Ref 5) by way of comparison with ethylenediaminetetraacetic acid. By this method it was shown that the new complexons have a complex-forming capacity of the same order as ethylenediaminetetraacetic acid. The table shows the result of these chromatographic determinations.

Card 2/3

APPROVED FOR RELEASE: 07/16/2001 CIA-RDP86-00513R001755620012-2"

"APPROVED FOR RELEASE: 07/16/2001 CIA-RDP86-00513R001755620012-2

Substances With a Complex-forming Capacity. IV. SOV/79-29-8-59/81
Trans-1,2-diaminocyclohexene- and 1-Phenylethylenediamine-N,N,N',N'-tetra-acetic Acids

The results of the investigation of complexon (II) show that the presence of the phenyl radical beside one of the amino groups of ethylenediaminetetraacetic acid has but little effect upon the complex-forming capacity. There are 1 table and 6 references, 5 of which are Soviet.

SUBMITTED: July 5, 1958

Card 3/3

APPROVED FOR RELEASE: 07/16/2001 CIA-RDP86-00513R001755620012-2"

"APPROVED FOR RELEASE: 07/16/2001 CIA-RDP86-00513R001755620012-2

"Khimicheskaya Zashchita Organizma ot Ionizirovashchikh Izlucheniy (Chemical Protection of the Organism From Ionizing Radiation)," edited by V. S. Balabukha; Moscow, Atomizdat, 1960, pp 1-151

The volume consists of a table of contents (attached), an introduction in which the author outlines the purpose of the book, and two sections. The first section deals with the problem of the chemical protection of the organism from penetrating radiation. A brief analysis is given of the contemporary state of the problem, data obtained in experiments are cited, and the theories of the mechanism of the protective action of some chemicals (aminothiols and pyrimidine derivatives) are examined.

The second section deals with the problem of the elimination of radioactive isotopes from the organism. The effectiveness of certain chemicals which, when introduced into the organism, have the capacity to form with the isotopes stable compounds which would be readily eliminated from the organism is examined.

	Page
Introduction	5
Part 1. Chemical Protection From Ionizing Radiation	
Present State of Chemical Protection From Ionizing Radiation, by V. S. Balabukha	7
Relationship Between the Structure and Properties of Sulfur-Containing Compounds and Their Protective Action From Penetrating Radiation, by V. G. Yakovlev	14
On the Mechanism of the Protective Action of Some Thiol Compounds, by V. G. Yakovlev and L. S. Isupova	41
Effect of Protective Doses of l-Cysteine on the Level of Nonprotein Sulfhydryl Groups in the Tissues of Rats Irradiated With X-Rays, by L. S. Isupova	55
Effect of Protective Substances on Protein Sulfhydryl Groups in the Organs and Tissues of Healthy and Irradiated Animals, by V. G. Yakovlev and L. S. Isupova	62
Synthesis and Test of the Protective Action of a Series of Sulfur-Containing Compounds and Cumarine Derivatives, by V. G. Yakovlev and V. S. Mashtakov	72
Effect of Beta-Mercaptoethylamine on the Formation of Organic Peroxides in the Irradiated Organism, by Ye. F. Rozantsev and Z. I. Chulanova	82
Possibility of the Utilization of Chemical Compounds as Energy Traps in the Protection From Penetrating Radiation, by G. Ye. Fradkin	93
Part 2. Elimination of Radioactive Isotopes From the Organism	
General Information	111
Physicochemical (Chromatographic) Investigation of the Effectiveness of Certain Complex-Forming Substances, by L. I. Tikhonova and L. M. Rabitnaya	112
Characteristics of the State of Radioactive Isotopes Sr^{89}, Y^{91}, and Ce^{144} in the Blood, by L. M. Rabitnaya and V. S. Balabukha	117
Effect of Complex-Forming Substances on the Binding Character of Radioisotopes in the Blood, by L. M. Rabitnaya and V. S. Balabukha	125
Character and Stability of Y^{91} Bond in Bone Tissue, by N. O. Razumovskiy, O. L. Torchinskaya, and V. S. Balabukha	130
Analysis of the Effectiveness of Complex-Forming Substances Which Hasten the Elimination of Radioactive Isotopes From the Organism, by G. Ye. Fradkin and V. F. Ushakova	136

Tikhonova, L. I.

APPROVED FOR RELEASE: 07/16/2001 CIA-RDP86-00513R001755620012-2"

"APPROVED FOR RELEASE: 07/16/2001 CIA-RDP86-00513R001755620012-2

TIKHONOVA, L. I.

Dissertation defended for the degree of Candidate of Chemical Sciences at the Institute of Geochemistry and Analytical Chemistry imeni V. I. Vernadskiy in 1962:

"Chromatographic Study of Complex Compounds as a Basis for Selecting Effective Compounds in Separating Radioisotopes of Rare-Earth Elements and Strontium from the Organism."

Vest. Akad. Nauk SSSR. No. 4, Moscow, 1963, pages 119-145

APPROVED FOR RELEASE: 07/16/2001 CIA-RDP86-00513R001755620012-2"

"APPROVED FOR RELEASE: 07/16/2001 CIA-RDP86-00513R001755620012-2

TIKHONOVA, N. I.

PHASE I BOOK EXPLOITATION SOV/6301

Balabukha, V. S., L. M. Razbitnaya, N. O. Razumovskiy, and L. I. Tikhonova

Problema vyvedeniya iz organizma dolgozhivushchikh radioaktivnykh izotopov (The Problem of Eliminating Long-Lived Radioactive Isotopes From Organisms) Moscow, Gosatomizdat, 1962. 166 p. Errata slip inserted. 4000 copies printed.

Ed.: V. S. Balabukha, Professor. Ed. (Title page): R. V. Boksha; Tech. Ed.: S. M. Popova.

PURPOSE: This book is intended for chemists, biochemists, radiobiologists, and general practitioners.

COVERAGE: The book deals with the elimination of radioactive substances from the body. It discusses the use and effectiveness of complex-forming agents for preventive and therapeutic purposes, the complex formation of chemical elements with organic

Card 1/42

APPROVED FOR RELEASE: 07/16/2001 CIA-RDP86-00513R001755620012-2"

"APPROVED FOR RELEASE: 07/16/2001 CIA-RDP86-00513R001755620012-2

compounds and methods of determining their composition and stability, and the binding of radioactive isotopes in biological media for their ultimate elimination. No personalities are mentioned. References follow individual chapters.

TABLE OF CONTENTS:

Introduction 3

Ch. I. Prospective Use of Chemical Compounds to Eliminate Radioactive Isotopes From the Organism 5

Ch. II. General Information on Complex Formation and Complex Compounds of Metals 13
General concepts of complex compounds 13
Complex chelate compounds 15
Factors determining the stability of complex compounds 32

APPROVED FOR RELEASE: 07/16/2001 CIA-RDP86-00513R001755620012-2"

"APPROVED FOR RELEASE: 07/16/2001 CIA-RDP86-00513R001755620012-2

TIKHONOVA, L.I.

Determination of the composition and stability of complex compounds by ion exchange chromatography. Zhur.neorg.khim. 7 no.4:822-830 Ap '62. (MIRA 15:4)

(Complex compounds) (Ion exchange)

APPROVED FOR RELEASE: 07/16/2001 CIA-RDP86-00513R001755620012-2"