"APPROVED FOR RELEASE: 07/16/2001 CIA-RDP86-00513R001755810003-1

28 (5)

AUTHORS: Ovsyannikov, B. M., Stolyarov, V. A., Timoshuk, L. T. SOV/32-25-8-32/44

TITLE: On the Influence of Geometrical Parameters of Conical Diamond-tips on the Measuring Results of the Hardness of Metal

PERIODICAL: Zavodskaya laboratoriya, 1959, Vol 25, Nr 8, pp 996-998 (USSR)

ABSTRACT: The theoretically and experimentally conducted investigations (Refs 2-5) unequivocally point to the influence mentioned in the title on the metal-hardness tests according to Rockwell (MHR). As up to the present there has not been found a functional correlation between the parameters of a standardized test and the constants characteristic of the material, the theoretical explanations are based on various assumptions. Some explanations of this kind are mentioned as G. P. Zaytsev (Ref 2) and (Ref 3) with the corresponding data (Table 1) and explanations of the Vsesoyuznyy institut metrologii im. Mendeleyeva (All-Union Institute of Metrology imeni Mendeleyev) and the NIIVESPROM. The last-mentioned institute investigated the influence of the curvature radius (R) of the conical diamond tips (DT) on the (MHR). The obtained diagrams (Fig 1) show that a continuous increase of the Rockwell hardness rating can be observed with the

Card 1/2

APPROVED FOR RELEASE: 07/16/2001 CIA-RDP86-00513R001755810003-1"

"APPROVED FOR RELEASE: 07/16/2001 CIA-RDP86-00513R001755810003-1

On the Influence of Geometrical Parameters of Conical Diamond-tips on the Measuring Results of the Hardness of Metal SOV/32-25-8-32/44

increase of the (R) (Table 2). On especially prepared test-tips (TT) of hard alloy, the influence of the end angle-degree of the (TT) on the results of the (MHR) was tested and it was established (Fig 2, Table 3) that better results are obtained if at a deviation of the (R) of the ϱ from the nominal value and an increase of the deviation of the angle α at the (TT)end cause a decrease of the α. It is indicated that if at the manufacture of the (DT) the tolerance limits of the main dimensions ($\alpha = \pm$ 10-30' and R = $\pm$ 0.005-0.010 mm) are being observed, a considerable decrease of the systematic error can be achieved, as well as the gauging of the testing instruments can be made much easier. There are 3 figures, 3 tables, and 5 references, 2 of which are Soviet.

ASSOCIATION: Tsentral'nyy nauchno-issledovatel'skiy institut chernoy metallurgii (Central Scientific Research Institute of Ferrous Metallurgy)

Card 2/2

APPROVED FOR RELEASE: 07/16/2001 CIA-RDP86-00513R001755810003-1"

"APPROVED FOR RELEASE: 07/16/2001 CIA-RDP86-00513R001755810003-1

S/028/60/000/010/007/020
B013/B063

AUTHOR: Timoshuk, L. T.

TITLE: Methods of Short-time Tensile Tests

PERIODICAL: Standartizatsiya, 1960, No. 10, pp. 35 - 37

TEXT: The present paper deals with the standardization of tensile test methods. A standard on tensile test methods for metal has been worked out by the Laboratoriya mekhanicheskikh ispytaniy metallov Tsentral'nogo nauchno-issledovatel'skogo instituta chernoy metallurgii (Laboratory for Mechanical Testing of Metals of the Central Scientific Research Institute of Ferrous Metallurgy), which was discussed in February 1960 at a meeting of 70 experts of industrial laboratories, scientific research institutes, and other organizations. The vivid discussion has shown that ГОСТ 1497-42 (GOST 1497-42), which has been valid for eighteen years, does not meet modern requirements. A standard for high-temperature tests was discussed at TsNIIChermet in June 1960. The general trend in the development of methods for tensile tests of metals is seen from the following: 1) The rate of deformation must be limited to a definite range. This is

Card 1/2

APPROVED FOR RELEASE: 07/16/2001 CIA-RDP86-00513R001755810003-1"

"APPROVED FOR RELEASE: 07/16/2001 CIA-RDP86-00513R001755810003-1

Methods of Short-time Tensile Tests

S/028/60/000/010/007/020
B013/B063

particularly important to high-temperature tests. 2) Automatic plotting of elongation-versus-force diagrams makes it possible to determine the yield point in series tests. This makes it necessary to provide the testing instruments with high-precision self-recorders. 3) Thermal conditions and temperature measurement of specimens must be specified for high-temperature tensile tests. 4) It seems inconvenient to specify tensile test methods for all types of metalware including wire and tubes, and tests at high and low temperatures on one single standard. 5) The elaboration of standards on tensile test methods for metals is closely related to the demands made on testing equipment. Therefore, the elaboration of standards must not be based on the testing machines and instruments available. For this reason, it is necessary to work out standards for test methods and technical specifications for testing equipment at the same time. There is 1 figure.

Card 2/2

APPROVED FOR RELEASE: 07/16/2001 CIA-RDP86-00513R001755810003-1"

"APPROVED FOR RELEASE: 07/16/2001 CIA-RDP86-00513R001755810003-1

S/137/62/000/001/083/237
A052/A101

AUTHORS: Timoshuk, L.T., Nistratov, N.I.

TITLE: Experimental evaluation of the effect of ribs of intermittent profile reinforcing steel on its fatigue strength

PERIODICAL: Referativnyy zhurnal. Metallurgiya, no. 1, 1962, 22, abstract 1D143 (V sb. "Stal'", Moscow, Metallurgizdat, 1961, 417 - 423)

TEXT: The fatigue strength of intermittent rods after GOST 7314-55 made of Ст.5 (St.5), 23ГС2 (23GS2) and 30ХГ2С (30KhG2S) of the nominal diameter (of the unribbed part) 16, 28 and 28 mm was investigated at TsNIIChM. Tensometric measurements at static pure bending indicated the concentration of stresses at the base of ribs. The coefficient of the concentration K = 1.4. Grinding off the ribs to the nominal diameter lead to an increase of the fatigue strength by 25%. When testing for the alternating axial tension, the most characteristic for the practical service of the reinforcing steel, difficulties were faced connected with the fact that the ends of the samples, owing to the considerable concentration of stresses in them, proved to be the weak point i.e. a premature destruction was observed at clamps. Several methods to strengthen

Card 1/2

APPROVED FOR RELEASE: 07/16/2001 CIA-RDP86-00513R001755810003-1"

"APPROVED FOR RELEASE: 07/16/2001 CIA-RDP86-00513R001755810003-1

S/137/62/000/001/083/237
A052/A101

them were checked; reliable results were achieved by a deep surface cold hardening of the ends on a special drop hammer. After that, when testing samples with ribs ground off smoothly on some section, destructions took always place there where ribs had been left. Fatigue cracks appeared at the joints of the longitudinal and lateral ribs with the surface of the rod. The necessity of working out a new reinforcing profile with a lower concentration of stresses is pointed out.

Ye. Bukhman

[Abstracter's note: Complete translation]

APPROVED FOR RELEASE: 07/16/2001 CIA-RDP86-00513R001755810003-1"

"APPROVED FOR RELEASE: 07/16/2001 CIA-RDP86-00513R001755810003-1

S/028/61/000/012/002/004
D221/D303

AUTHOR: Timoshuk, L. T.

TITLE: Standardizing methods of mechanical testing of metals and testing equipment

PERIODICAL: Standartizatsiya, no. 12, 1961, 35 -37

TEXT: On the initiative of the Committee of Standards, Measures and Instruments, a commission was formed for the mechanical testing of metals. At present, there are IOCT (GOST) 1497-61 and 9651-61 for examining the tensile properties of metals at room and high temperatures. The testing of static tension by micromechanical method of specimens with 1-2 mm diameter, the determination of modulus E and Poisson coefficient, and the plotting of actual stresses due to tension, are required. There is a need for machines and instruments for small deformations, and also for recorders. GOST 3248-60 defines creep testing. There is a lack of equipment for torsion testing as per GOST 3565-58. The units made

Card 1/3

APPROVED FOR RELEASE: 07/16/2001 CIA-RDP86-00513R001755810003-1"

"APPROVED FOR RELEASE: 07/16/2001 CIA-RDP86-00513R001755810003-1

by the Ivanovskiy zavod ispytatel'nykh mashin (Ivanov Factory of Testing Machines) should be improved. The examination of statical torsion at high temperature must be unified. The same applies to the determination of elastic characteristics by torsional pendulum. The GOST 2860-45 for yield limit requires revision. Additional standards should be worked out for testing bending with torsion; variable compression and tension; low frequency fatigue; variable torsion and variable plane bending. The existing standards for ropes must be modified to include vibration tests. New standards GOST 9454-60, 9455-60 and 9456-60 are being introduced for impact strength testing. Norms for hardness measuring instruments should be more rigorous, and in this connection GOST 7038-54 must be revised. The author suggests re-starting the manufacture of Shore scleroscopes. There is a lack of rules on sheet metal testing by Eriksens's method, as well as a shortage of corresponding instruments. The USSR does not manufacture instruments for measuring small deformations. A need is evident for unifying the designations and

APPROVED FOR RELEASE: 07/16/2001 CIA-RDP86-00513R001755810003-1"

"APPROVED FOR RELEASE: 07/16/2001 CIA-RDP86-00513R001755810003-1

Standardizing methods of ... S/028/61/000/012/002/004
D221/D303

terminology of mechanical testing of metals which are revised by the Komitet po tekhnicheskoy terminologii pri Akademii nauk SSSR (Committee of Technical Terminology at the AS USSR). The importance of unifying the methods of mechanical metal testing is stressed by a conference of the Komitet prochnosti nauchno-tekhnicheskogo obshchestva mashinostroiteley (Committee of Strength of the Scientific and Technical Society of Engineers). The above was devoted to unification of fatigue testing of large specimens of metal and welded structures.

Card 3/3

APPROVED FOR RELEASE: 07/16/2001 CIA-RDP86-00513R001755810003-1"

"APPROVED FOR RELEASE: 07/16/2001 CIA-RDP86-00513R001755810003-1

S/028/62/000/003/004/005
D217/D302

AUTHORS: Timoshuk, L.T. and Bat', A.A.

TITLE: Recommendations for the mechanical methods of metal testing

PERIODICAL: Standartizatsiya, no. 3, 1962, 29-31

TEXT: At a conference for the coordination of the study of methods of testing the strength of metals and compounds used in metal structures, held in Moscow, in 1961, recommendations were made for unification of these methods and for treating experimental data. The first recommendation was on the shape and dimensions of test specimens, the second was on the unification of conditions of gripping specimens in the tensile test machine, and the third, on the refinement of methods of interpreting the test results.

Card 1/1

APPROVED FOR RELEASE: 07/16/2001 CIA-RDP86-00513R001755810003-1"

"APPROVED FOR RELEASE: 07/16/2001 CIA-RDP86-00513R001755810003-1

S/776/62/000/024/004/007
E193/E383

AUTHORS: Timoshuk, L.T. and Nistratov, N.I.

TITLE: Bending tests on the ЦДМК-30 (TsDMK-30) machine as means of determining the proneness of steel to brittle fracture

SOURCE: Moscow. Tsentral'nyy nauchno-issledovatel'skiy institut chernoy metallurgii. Sbornik trudov. no. 24. 1962. novyye metody ispytaniy metallov. 327 - 336

TEXT: Transverse bending tests on notched-bar test pieces can serve as a means to evaluate the proneness of steel to brittle fracture. If the applied stress reaches a maximum value and then decreases gradually at increasing strain (deflection), this indicates ductile fracture; brittle fracture is indicated by the applied stress falling sharply from its maximum value to zero at an approximately constant strain. The lower the temperature at which the stress/strain diagram assumes the latter form, the less prone is a given steel to brittle fracture. Tests of this type used to be conducted in the Soviet Union on a Gagarin testing machine. Recently, many laboratories have been equipped with a

Card 1/3

APPROVED FOR RELEASE: 07/16/2001 CIA-RDP86-00513R001755810003-1"

"APPROVED FOR RELEASE: 07/16/2001 CIA-RDP86-00513R001755810003-1

Bending tests S/776/62/000/024/004/007
E193/E383

universal, hydraulically-driven machine TsDMK-30, made in the German People's Republic. The object of the present investigation was to establish whether this machine could be used for evaluating the proneness of steel to brittle fracture. The effect of the manner of operating the machine on the rate of strain and the shape of the stress/strain diagram was studied. If the brittle fracture is to be shown on the stress/strain diagram constructed with the aid of the TsDMK-30 machine, by the sudden drop in the stress at constant strain, the rate at which the oil is pumped into the working cylinder of the machine must be maintained constant. In addition, the results of several tests can be compared only if the initial rate of travel of the movable shackle of an idly running machine is the same in each case. Provided that these conditions are fulfilled, the machine studied can successfully replace the Gagarin machine, the advantage of the former being that it enables a test to be completed in a very much shorter time than that required with the latter. The difference between the results obtained on steel 45 with both machines is demonstrated in Figs.10 and 11, showing stress/strain diagrams obtained at a) room temperature and b) -40 °C on the Gagarin machine (Fig.10) and the

Card 2/3

APPROVED FOR RELEASE: 07/16/2001 CIA-RDP86-00513R001755810003-1"

"APPROVED FOR RELEASE: 07/16/2001 CIA-RDP86-00513R001755810003-1

Bending tests S/776/62/000/024/004/007
E193/E383

TsDMK-30 machine (Fig. 11). There are 11 figures and 2 tables.

Fig. 10:

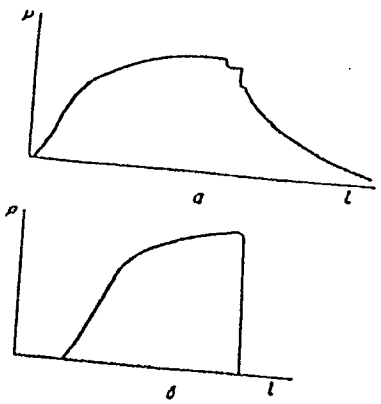

Fig. 11:

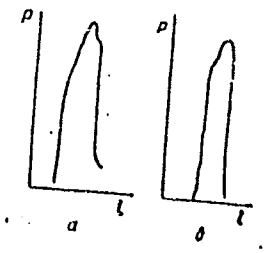

Card 3/3

APPROVED FOR RELEASE: 07/16/2001 CIA-RDP86-00513R001755810003-1"

"APPROVED FOR RELEASE: 07/16/2001 CIA-RDP86-00513R001755810003-1

TIMOSHUK, L.T.; KULIKOV, A.P.; KONOVALOV, L.V.; SHUVALOV, S.A.

Parameter "a" as characteristic of metal resistance to overloading. Sbor. trud. TSNIICHM no.24:349-369 '62. (MIRA 15:6)
(Steel--Testing) (Strains and stresses)

APPROVED FOR RELEASE: 07/16/2001 CIA-RDP86-00513R001755810003-1"

"APPROVED FOR RELEASE: 07/16/2001 CIA-RDP86-00513R001755810003-1

BAT', A.A.; TIMOSHUK, L.T.

Conference on the strength of metal and joints in metal constructions. Zav.lab. 28 no.3:388-390 '62. (MIRA 15:4)

1. TSentral'nyy nauchno-issledovatel'skiy institut stroitel'nykh konstruktsiy i TSentral'nyy nauchno-issledovatel'skiy institut chernoy metallurgii imeni I.P.Bardina.
(Metals--Testing)

APPROVED FOR RELEASE: 07/16/2001 CIA-RDP86-00513R001755810003-1"

"APPROVED FOR RELEASE: 07/16/2001 CIA-RDP86-00513R001755810003-1

L 15804-65 EWT(m)/EWP(w)/EPF(c)/EWA(d)/T/EWP(t)/EWP(b) Pr-4 SSD/AFWL/
ASD(m)-3 MJW/JD/DJ

ACCESSION NR: AP4048370

S/0032/64/030/011/1381/1385

AUTHORS: Kovalenko, A. D.; Timoshuk, L. T.

TITLE: On nonhomogeneous volume compression with high temperatures and external friction

SOURCE: Zavodskaya laboratoriya, v. 30, no. 11, 1964, 1381-1385

TOPIC TAGS: compressive property, triaxial test, heat deformation, metal mechanical property/ 1Kh18N9T steel, Kh17 steel, Kh28 steel

ABSTRACT: The authors surveyed the work of several researchers in the testing of metals by triaxial compression. Three methods were cited as being prevalent: 1) testing in a chamber with controlled hydrostatic pressure; 2) compressing a cube of material by three independent or partially independent devices; and 3) compressing the material in a collar or yoke. Tests were conducted on compressing specimens of 1Kh18N9T steel 6 mm in diameter by 10 mm in height, using a collar device in the temperature range from 900-1000C, on a universal 30-ton Shopper machine, in a manner permitting oven heating during compression. The test objectives were to compare the results of using collars made of various materials under varying temperature and compression speed conditions and to evaluate the influence of lubrication of specimen faces. Kh17 and Kh28 steels were used in making collars. Photographs

Card 1/2

APPROVED FOR RELEASE: 07/16/2001 CIA-RDP86-00513R001755810003-1"

"APPROVED FOR RELEASE: 07/16/2001 CIA-RDP86-00513R001755810003-1

L 15804-65
ACCESSION NR: AP4048370

of deformed specimens are shown. The authors concluded that wall lubrication appreciably increases the degree of deformation, and they present plots for demonstrating this phenomenon. The degree of deformation is less pronounced with increasing deformation speed for lubricated specimens. Orig. art. has: 2 figures and 1 table.

ASSOCIATION: Tsentral'ny*y nauchno-issledovatel'skiy institut chernoy metallurgii im. I. P. Bardina (Central Scientific Research Institute of Ferrous Metallurgy)

SUBMITTED: 00

SUB CODE: MM NO REF SOV: 016 ENCL: 00

OTHER: 003

Card 2/2

APPROVED FOR RELEASE: 07/16/2001 CIA-RDP86-00513R001755810003-1"

"APPROVED FOR RELEASE: 07/16/2001 CIA-RDP86-00513R001755810003-1

L 22468-66 EWT(d)/EWT(m)/EWP(w)/EWA(d)/EWP(v)/T/EWP(t)/EWP(k)/EWP(h)/EWP(l) IJP(c)

ACC NR: AP6013578 JD/WB SOURCE CODE: UR/0032/65/031/009/1141/1142

AUTHOR: Nistratov, N. I.; Timoshuk, L. T.

ORG: Central Scientific Research Institute of Ferrous Metallurgy im. I. P. Bardin (Tsentral'nyy nauchno-issledovatel'skiy institut chernoy metallurgii)

TITLE: Electric furnace for metal torsion testing at elevated temperatures in a protective atmosphere

SOURCE: Zavodskaya laboratoriya, v. 31, no. 9, 1965, 1141-1142

TOPIC TAGS: metallurgic furnace, metal test, heat resistant alloy, potentiometer/EPP-09 potentiometer, EI437A heat resistant alloy

ABSTRACT: Certain metals and alloys are intensively oxidized at high temperatures thus the need arises to conduct tests in a protective medium. For this purpose a special electric furnace was designed and built. With the use of this furnace specimen tests can be conducted in gaseous nitrogen or argon. The furnace is small, reliable and easy to operate. The parts of the furnace are: 1 - silit rods, 2 - muffle, 3 - housing, 4 - insulation (firebrick), 5 - specimen, 6 - through holes, 7 - capped rings, 8 - ring channels, 9 - gas inlet tube, 10 - reservoir, 11 - tubes, 12 - holding device.

Card 1/2

APPROVED FOR RELEASE: 07/16/2001 CIA-RDP86-00513R001755810003-1"

"APPROVED FOR RELEASE: 07/16/2001 CIA-RDP86-00513R001755810003-1

L 22468-66

ACC NR: AP6013578

2

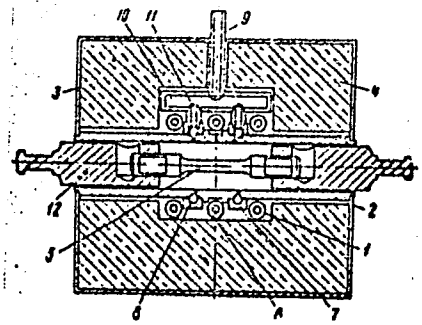

Diagram of electric furnace.

The furnace temperature is regulated by an autotransformer through an EPP-09 potentiometer. At 1473°C the maximum power requirement of the furnace is 2.8 kva. The muffle and its auxiliary devices are made of the heat-resistant alloy EI437A. Orig. art. has: 1 figure. [JPRS]

SUB CODE: 13 / SUBM DATE: none

Card 2/2

APPROVED FOR RELEASE: 07/16/2001 CIA-RDP86-00513R001755810003-1"

"APPROVED FOR RELEASE: 07/16/2001 CIA-RDP86-00513R001755810003-1

NISTRATOV, N.I.; TIMOSHUK, L.T.

Electric furnace for torsional tests for metals at high temperatures in a protecting medium. Zav. lab. 31 no.9:1141-1142 '65. (MIRA 18:10)

1. TSentral'nyy nauchno-issledovatel'skiy institut chernoy metallurgii imeni Bardina.

APPROVED FOR RELEASE: 07/16/2001 CIA-RDP86-00513R001755810003-1"

"APPROVED FOR RELEASE: 07/16/2001 CIA-RDP86-00513R001755810003-1

ZOTEYEV, V.S.; TIMOSHUK, L.T.; KORBUT, Ye.K.

Testing sheet metals. Standartizatsiia 29 no.3:16-18 Mr '65.
(MIRA 18:5)

APPROVED FOR RELEASE: 07/16/2001 CIA-RDP86-00513R001755810003-1"

"APPROVED FOR RELEASE: 07/16/2001 CIA-RDP86-00513R001755810003-1

TIMOSHUK, L.T.; GUDKOV, A.A.

Methods of testing metals and alloys for creep and vibration creep. Sbor. trud. TSNIICHM no.38:123-135 '64.

(MIRA 18:3)

APPROVED FOR RELEASE: 07/16/2001 CIA-RDP86-00513R001755810003-1"

"APPROVED FOR RELEASE: 07/16/2001 CIA-RDP86-00513R001755810003-1

ZOTEYEV, V.S.; TIMOSHUK, L.T.

Dynamic errors in the measurement of stress applied to a specimen during fatigue testing on a 300/600-ton hydraulic pulsator. Sbor. trud. TSNIICHM no.32:182-191 '63. (MIRA 16:12)

APPROVED FOR RELEASE: 07/16/2001 CIA-RDP86-00513R001755810003-1"

"APPROVED FOR RELEASE: 07/16/2001 CIA-RDP86-00513R001755810003-1

TIMOSHUK, L.T.; KURGANOVA, Ye.A.

Steel testing for static tension and torsion. Sbor. trud. TSNIICHM no.32:196-204 '63. (MIRA 16:12)

APPROVED FOR RELEASE: 07/16/2001 CIA-RDP86-00513R001755810003-1"

"APPROVED FOR RELEASE: 07/16/2001 CIA-RDP86-00513R001755810003-1

TIMOSHUK, L.T.; SMOLINA, V.I.

Methods of studying the effect of vibration and its frequency on the stress-rupture strength of heat-resistant alloys. Sbor. trud. TSNIICHM no.32:155-163 '63. (MIRA 16:12)

APPROVED FOR RELEASE: 07/16/2001 CIA-RDP86-00513R001755810003-1"

"APPROVED FOR RELEASE: 07/16/2001 CIA-RDP86-00513R001755810003-1

ACCESSION NR: AT4001247 S/2776/63/000/032/0155/0163

AUTHORS: Timoshuk, L. T.; Smolina, V. I.

TITLE: Method of investigating effect of vibration and vibration frequency on the rupture strength of a heat resistant alloy

SOURCE: Moscow. Tsentral'ny*y nauchno-issledovatel'skiy institut chernoy metallurgii. Sbornik trudov, no. 32, 1963, 155-163

TOPIC TAGS: stress rupture test, heat resistant alloy, rupture strength, vibration static stress rupture test, combined fatigue stress rupture test

ABSTRACT: Various procedures and results are reported on long-run static loading tests of heat-resistant alloys, with combined axial and vibration loading of different frequency. Such conditions are encountered in gas turbines. A constant decrease in the resistance of the alloy to failure was observed with increasing total duration

Card 1/2

APPROVED FOR RELEASE: 07/16/2001 CIA-RDP86-00513R001755810003-1"

"APPROVED FOR RELEASE: 07/16/2001 CIA-RDP86-00513R001755810003-1

ACCESSION NR: AT4001247

of the test (up to 1,000--3,000 hours). The superposition of vibration on a long-run static load decreases the durability of the sample and this effect increases with increasing applied frequency. It is recommended that in view of the complexity of the vibrations of gas turbine blade that their durability be estimated not in terms of number of cycles to destruction but in length of time to destruction, since the two definitions are not equivalent. Some high-temperature alloys (EI727 and EI827) exhibit an increased sensitivity when the test time is lengthened. Arguments are advanced in favor of applying the described procedures to investigations of fatigue strength of alloys subject to vibration at high temperatures. Orig. art. has: 5 figures and 3 formulas.

ASSOCIATION: Tsentral'ny*y nauchno-issledovatel'skiy institut chernoy metalurgii (Central Scientific-Research Institute of Ferrous Metallurgy)

Card 2/3

APPROVED FOR RELEASE: 07/16/2001 CIA-RDP86-00513R001755810003-1"

"APPROVED FOR RELEASE: 07/16/2001 CIA-RDP86-00513R001755810003-1

TIMOSHUK, L.T.; NISTRATOV, N.I.

Temperature-deformation rate factor in the evaluation of metal plasticity by the method of torsion. Zav. lab. 29 no.10:1225-1228 '63. (MIRA 16:12)

1. TSentral'nyy nauchno-issledovatel'skiy institut chernoy metallurgii imeni I.P. Bardina.

APPROVED FOR RELEASE: 07/16/2001 CIA-RDP86-00513R001755810003-1"

"APPROVED FOR RELEASE: 07/16/2001 CIA-RDP86-00513R001755810003-1

TIMOSHUK, L.T.

Standardization of the methods of mechanical testing of metals.
Zav.lab. 29 no.5:515-517 '63. (MIRA 16:5)
(Metals—Testing)

APPROVED FOR RELEASE: 07/16/2001 CIA-RDP86-00513R001755810003-1"

"APPROVED FOR RELEASE: 07/16/2001 CIA-RDP86-00513R001755810003-1

NOVOKOVSKIY, M.Ya.; TIMOSHUK, S.A.; KARPOVICH, G.G.; CHIZHOV, N.S.

Enlarging the boom of the "Pioner" crane. Rats. i izobr.predl.v stroi. no.119:5-6 '55. (Cranes, derricks, etc.) (MLRA 9:7)

APPROVED FOR RELEASE: 07/16/2001 CIA-RDP86-00513R001755810003-1"

"APPROVED FOR RELEASE: 07/16/2001 CIA-RDP86-00513R001755810003-1

TIMOSHUK, L.T.; NISTRATOV, N.I.

Determining the tendency of steel toward brittle fracture by the bending text on the IDMK-30 machine. Sbor. trud. TSNIICHM no.24:327-335 '62. (MIRA 15:6)
(Steel—Brittleness) (Testing machines)

APPROVED FOR RELEASE: 07/16/2001 CIA-RDP86-00513R001755810003-1"

"APPROVED FOR RELEASE: 07/16/2001 CIA-RDP86-00513R001755810003-1

TIMOSHUK, L.I.; NISTRATOV, N.I.

Method of investigating the delayed failure of helical rib enforcement steel under the effect of static tension. Sbor. trud. TSNIICHM no.24:336-341 '62. (MIRA 15:6)
(Steel--Fatigue) (Concrete reinforcement--Testing)

APPROVED FOR RELEASE: 07/16/2001 CIA-RDP86-00513R001755810003-1"

"APPROVED FOR RELEASE: 07/16/2001 CIA-RDP86-00513R001755810003-1

TIMOSHUK, L.T., NISTRATOV, N.I.

Fatigue testing of armature steel with a periodical profile. Zav.lab. 26 no.5:608-609 '60. (MIRA 13:7)

1. TSentral'nyy nauchno-issledovatel'skiy institut chernoy metallurgii.

(Steel--Fatigue)

APPROVED FOR RELEASE: 07/16/2001 CIA-RDP86-00513R001755810003-1"

"APPROVED FOR RELEASE: 07/16/2001 CIA-RDP86-00513R001755810003-1

L 27768-65 EPA(s)-2/EWP(k)/EWT(d)/EWT(m)/EPA(bb)-2/EWP(h)/T/EWA(d)/EWP(w)/EWP(t)/
ACCESSION NR: AT5003405 S/2770/64/000/038/0123/0135
Pt-4/Pt-10/ IJP(c) EW/MJS/JD/HW

AUTHOR: Timoshuk, L. T.; Gudkov, A. A.

TITLE: Methods of testing metals and alloys for creep and vibratory creep

SOURCE: Moscow. Tsentral'nyy nauchno-issledovatel'skiy institut chernoy metallurgii. Sbornik trudov, no. 38, 1964. Novyye metody ispytaniy metallov; metallograficheskiye issledovaniya i mekhanicheskiye ispytaniya metallov (New methods in the analyses of metals; metallographic investigations and mechanical analyses of metals), 123-135

TOPIC TAGS: vibratory creep, creep, nickel alloy, chromium containing alloy, turbine component, creep testing / alloy EI726, alloy EI652

ABSTRACT: The authors investigated the effects of long-term application of static load and vibration produced by a specially designed machine on the behavior of EI726 and EI652 alloys normally used at service temperatures of 600-700 and 1100 - 1200 C, respectively. The composition of EI726 is: 0.08 - 0.12%C; 0.6% Si; 2% Mn; 15% Cr; 20% Ni; 1.2% Nb; 2.75% W; 0.025% B; S≤0.020%; P≤0.020%; this alloy is used for the manufacture of vanes, disks, rotors and pipes; alloy EI652 contains 0.1% C; 0.8% Si; 0.3% Mn; 29% Cr; Ni is the base; 3.5% Al; 1% Fe;

Card 1/3

APPROVED FOR RELEASE: 07/16/2001 CIA-RDP86-00513R001755810003-1"

"APPROVED FOR RELEASE: 07/16/2001 CIA-RDP86-00513R001755810003-1

L 27768-65
ACCESSION NR: AT5003405

S≤0.020%; P≤0.020%; B 0.10%; this alloy is used for the manufacture of combustion chambers. Both alloys were subjected to constant and variable temperature conditions and EI652 was exposed to variable rates of load application. Specimens of EI726 were characterized by a high rate of vibratory creep at 600 and 700 C within the inital 1 - 3 hrs. of testing. Subsequently, the rate of creep and of vibratory creep evened out. Absolute elongation was higher in specimens exposed to vibration. During the initial stage of testing, EI652 specimens displayed a higher rate of creep than of vibratory creep under a load of 3 kg/mm^2 and at 900 C. Within 1 - 3 hours, the rate of creep and vibratory creep became almost the same. The absolute value of the elongation during vibration was lower at any stage of testing than during creep tests. At 1000 C and a load of 1.5 kg/mm^2 the rate of creep was higher in the initial stage of vibratory testing than during creep tests under similar conditions. Within 13 - 14 hrs., the rate of vibratory creep increased appreciably in comparison with the rate of creep. After 15 to 20 hrs., the deformation under the influence of vibration was double that in creep tests. Variable temperature and load application conditions produced similar results. The application of vibration to the static part of the load hardened the EI652 alloy somewhat at 900 C and substantially increased deformation at 1000 C. Orig. art. has: 16 figures and 4 formulas.

Card 2/3

APPROVED FOR RELEASE: 07/16/2001 CIA-RDP86-00513R001755810003-1"

"APPROVED FOR RELEASE: 07/16/2001 CIA-RDP86-00513R001755810003-1

L 27768-65

ACCESSION NR: AT5003405

ASSOCIATION: Tsentral'nyy nauchno-issledovatel'skiy institut chernoy metallurgii, Moscow (Central ferrous metallurgy scientific research institute)

SUBMITTED: 00 ENCL: 00 SUB CODE: MM

NO REF SOV: 003 OTHER: 007

Card 3/3

APPROVED FOR RELEASE: 07/16/2001 CIA-RDP86-00513R001755810003-1"

"APPROVED FOR RELEASE: 07/16/2001 CIA-RDP86-00513R001755810003-1

VOLKOVICH, S.I.; [illegible], N.Ye.; PETROVA, Ye.P.; TIMOSHUK, N.D.

Dehydration of double superphosphate. Zhur.prikl.khim. 37 no.5:951-954 My '64. (MIRA 17:7)

APPROVED FOR RELEASE: 07/16/2001 CIA-RDP86-00513R001755810003-1"

"APPROVED FOR RELEASE: 07/16/2001 CIA-RDP86-00513R001755810003-1

TIMOSHUK, P.G.

L 1[illegible]-65 EWT(d)/EWT(m)/EWP(c)/EWA(d)/EWP(v)/T-2/EWP(t)/EWP(k)/EWP(b)/EWP(1)
ACCESSION NR AM4046730 BOOK EXPLOITATION Pf-4 MJW/JD/ S/
MLK

Samarin, A. M., ed. (Corresponding member, Academy of Sciences, U.S.S.R.) B+1

Steel production; handbook (Staleplavil'noye proizvodstvo; spravochnik), t. 2., Moscow, Izd-vo "Metallurgiya", 1964, 1039 p. illus., biblio., tables. Errata slip inserted. 5,850 copies printed.

TOPIC TAGS: steel, open-hearth furnace, quality control, refractory

TABLE OF CONTENTS [abridged]: 16

Part 3. Thermal engineering
Ch. XV. Fuel and its combustion in an open-hearth furnace (N. I. Ivanov) -- 535
Ch. XVI. Mechanics of furnace gases in open-hearth furnaces (G. M. Glinkov) -- 554
Ch. XVII. Heat transfer in an open-hearth furnace (S.S. Magidson) -- 575
Ch. XVIII. Thermal operation of an open-hearth furnace (Ye. A. Kapustin) -- 603
Ch. XIX. Auxiliary thermal equipment in steel production (B. G. Turovskiy) -- 617

Card 1/3

APPROVED FOR RELEASE: 07/16/2001 CIA-RDP86-00513R001755810003-1"

"APPROVED FOR RELEASE: 07/16/2001 CIA-RDP86-00513R001755810003-1

L 17595-65
ACCESSION NR AM4046730

14

Part 9. Thermal processes
Ch. XX. Automatic control and regulation of thermal processes in steel production (A. P. Kopelovich, A. P. Sinchuk, and M. A. L'vov) -- 630
Ch. XXI. Evaporative cooling of open-hearth furnaces (S. M. Andon'yev) -- 720
Ch. XXII. Hot cooling of open-hearth furnaces (A. I. Tyurin) -- 745
Ch. XXIII. Boilers of open-hearth furnaces (A. I. Berezhinskiy) -- 754
Ch. XXIV. Cooling and cleaning converter gases (A. I. Berezhinskiy) -- 778
Ch. XXV. Supplying steelmaking shops with compressed air (G. A. Timoshko) -- 793
Ch. XXVI. Supplying steelmaking shops with oil (G. A. Timoshko) -- 807
Part 10. Methods of quality control and testing
Ch. XXVII. Chemical analysis (P. Ya. Yakovlov) -- 818
Ch. XXVIII. Spectral analysis (N. N. Sorokinn) -- 840
Ch. XXIX. Melting and delivered quality control of steel (M. I. Vinograd) -- 851
Ch. XXX. Mechanical testing of metals (P. G. Timoshuk) -- 868
Ch. XXXI. Analysis of gases in metals and alloys (L.L.Kunin, T. Ya. Izmanova, and Ye. M. Chistyakova) -- 887
Ch. XXXII. Determining nonmetallic inclusions and carbides (M. M. Shapiro) -- 897

Card 2/3

APPROVED FOR RELEASE: 07/16/2001 CIA-RDP86-00513R001755810003-1"

"APPROVED FOR RELEASE: 07/16/2001 CIA-RDP86-00513R001755810003-1

TIMOSHUK, V.V.

Braking of shaft hoisting motors by means of low-frequency current. Avtomatyka no.4:29-38 '56. (MLRA 10:2)

1. Institut girnichoi spravi im. M.M. Fedorova AN URSR. (Electric controllers) (Mine hoisting)

APPROVED FOR RELEASE: 07/16/2001 CIA-RDP86-00513R001755810003-1"

"APPROVED FOR RELEASE: 07/16/2001 CIA-RDP86-00513R001755810003-1

TIMOSHUK, V. V.

KRIZHANOVS'KIY, O.M.; TIMOSHUK, V.V.

Effect of the cable on the quality of transient processes in a system of automatic control for mine hoisting apparatus. Avtomatyka no.1:3-17 '57. (MLRA 10:5)

1. Institut girnichoi spravi im. M.M. Fedorova AN URSR. (Automatic control) (Elasticity)

APPROVED FOR RELEASE: 07/16/2001 CIA-RDP86-00513R001755810003-1"

"APPROVED FOR RELEASE: 07/16/2001 CIA-RDP86-00513R001755810003-1

TIMOSHUK, V.V.

Analysis of an a.c. winder control system allowing for the location of the measuring elements [with summaries in Russian and English]. Avtomatyka no.3:84-100 '57. (MIRA 10:10)

1. Institut girnichoi spravi imeni M.M.Fedorova Akademii nauk URSR. (Automatic control)

APPROVED FOR RELEASE: 07/16/2001 CIA-RDP86-00513R001755810003-1"

"APPROVED FOR RELEASE: 07/16/2001 CIA-RDP86-00513R001755810003-1

TIMOSHUK, V.V., Cand Tech Sci--(diss) " Study of systems of automatic regulation of hoisting devices with ~~an alternating current~~ AC drive for deep pits ~~with the calculation of~~ taking into account the effect of the elastic-tensile properties of the cable." L'vov, 19[illegible]. 24 pp with ills, (Min of Higher Education USSR. L'vov Polytech Inst), 100 copies (KL,25-58, 115)

APPROVED FOR RELEASE: 07/16/2001 CIA-RDP86-00513R001755810003-1"

"APPROVED FOR RELEASE: 07/16/2001 CIA-RDP86-00513R001755810003-1

TIMOSZENKOW, I.; STANKIEWICZ, L.

The problem of automatic couplings. p.371

Warszaw, Poland. PRZEGLAD KOLEJOWY. Wydawnictwa Komunikacyjne
Vol.10, no.9, Sept.1950

Monthly List of East European Accessions Index, (EEAI) LC, Vol.8, no.6
June 1959
Uncl.

APPROVED FOR RELEASE: 07/16/2001 CIA-RDP86-00513R001755810003-1"

"APPROVED FOR RELEASE: 07/16/2001 CIA-RDP86-00513R001755810003-1

TIMOTIJEVIC, R.

Parachute landing on mountainous and alpine terrains. p. 41

VOJNI GLASNIK. (Jugoslavenska narodna armija) Beograd, Yugoslavia
Vol. 13, no. 3, Mar. 1959

Monthly List of East European Accessions (EEAI) LC, Vol. 8, no. 9,
Sept. 1959

Uncl.

APPROVED FOR RELEASE: 07/16/2001 CIA-RDP86-00513R001755810003-1"

"APPROVED FOR RELEASE: 07/16/2001 CIA-RDP86-00513R001755810003-1

TIMOTIJEVIC, R.

Application of conic pu ley:. p.165. Belgrade. Univerzitet. Sumarski fakutet. GLASNIK. BULLETIN. Beograd. No. 8, 1954

SOURCE: East European Accessions List (EEAL), Library of Congress Vol. 5, No. 6, June 1956

APPROVED FOR RELEASE: 07/16/2001 CIA-RDP86-00513R001755810003-1"

"APPROVED FOR RELEASE: 07/16/2001 CIA-RDP86-00513R001755810003-1

[illegible], R.

Contribution to the problem of preparing beech beams. p. 77. ([illegible], No. 6, 19[illegible], Belgrad, Yugoslavia)

CO: Monthly List of East European Accessions, (EEAL), LC, Vol. 4, No. 1 Jan. 1955, Uncl.

APPROVED FOR RELEASE: 07/16/2001 CIA-RDP86-00513R001755810003-1"

"APPROVED FOR RELEASE: 07/16/2001 CIA-RDP86-00513R001755810003-1

RADULET, Remus; TIMOTIN, Alexandru; TIGULEA, Andrei

Determination of the dispersion reactance of some induction furnaces with iron core. Rev electrotechn energet 5 no.2:249-263 '60.

(EEAI 10:5)

1. Korrespondierendes Mitglied der Akademie der Rumanischen Volksrepublik; Comite de redaction, Revue d'electrotechnique et d'energetique, redacteur en chef (for Radulet)

(Electric furnaces) (Electric transformers)
(Induction (Electricity)) (Iron)

APPROVED FOR RELEASE: 07/16/2001 CIA-RDP86-00513R001755810003-1"

"APPROVED FOR RELEASE: 07/16/2001 CIA-RDP86-00513R001755810003-1

TIMOTIN, Alexandru

Relativistic dynamics of particle systems. Bul Inst Politeh 25 no.6: 105-112 N-D '63.

1. Chair of Electronics, Polytechnic Institute, Bucharest.

APPROVED FOR RELEASE: 07/16/2001 CIA-RDP86-00513R001755810003-1"

"APPROVED FOR RELEASE: 07/16/2001 CIA-RDP86-00513R001755810003-1

RADULET, R.; TIMOTIN, A.

A foundation of the computation with physical values independent of measuring units. Studii fiz tehn Iasi 11 no.2:243-263 '60.

1. Membru corespondent al Academiei R.P.R. (for Radulet).

(Weights and measures) (Physical measurements)

APPROVED FOR RELEASE: 07/16/2001 CIA-RDP86-00513R001755810003-1"

"APPROVED FOR RELEASE: 07/16/2001 CIA-RDP86-00513R001755810003-1

S/058/63/000/003/003/104
A160/A101

AUTHORS: Radulet, R., Timotin, A.

TITLE: The substantiation of calculations with physical quantities independently from measurement units

PERIODICAL: Referativnyy zhurnal, Fizika, no. 3, 1963, 11 - 12, abstract 3A112 ("Studii şi cercetări ştiint. Acad. RPR Fil. Iaşi. Fiz. şi ştiinţe tehn.", no. 2, 1960, v.11, 245 - 263, Rumanian)

TEXT: The concept of the physical quantity may be introduced by disregarding the concept of the measurement unit. In case there is a certain set of physical objects, for any pairs of which it may be established that they are equal or one of them is greater than the other, the presence of the function F_s, which permits to compare these objects with a continuous series of numbers, appears to be a necessary and adequate condition permitting to assume that there exists a certain physical quantity. Hereby, the physical quantity is expressed as $k_s \overset{o}{x}_s$, where $\overset{o}{x}_s$ changes when the physical state of the object is changed, and k_s is determined by the selection of the function F_s. A change of k_s does not

Card 1/3

APPROVED FOR RELEASE: 07/16/2001 CIA-RDP86-00513R001755810003-1"

"APPROVED FOR RELEASE: 07/16/2001 CIA-RDP86-00513R001755810003-1

change the physical quantity, since, in case F_s is substituted, this multiplier changes in all the products relating simultaneously to the quantities of the given type. Thus, the physical quantity changes only when the state of the object is changed. Such a determination of the physical quantity permits to strongly substantiate all known rules of calculations with physical quantities and formulas connecting the derivative quantities with the fundamental ones. The introduction of the concept of the measurement unit as a fixed value of the given-type physical quantity, and the substitution of the measurement units in the formulas connecting the physical quantities of various types, shows that in a definite coherence system the physical quantity may be recorded as $\chi_{sf} \cdot \lambda_s \cdot \overset{o}{x}_s$. In this expression, χ_{sf} is the "coherence coefficient" which depends only on the correlations selected from the measurement units, and which determines the coherence system comprising an innumerable set of possible measurement unit systems; and $\lambda_s \cdot \overset{o}{x}_s$ is the physical quantity in a limited sense, or a "quasi-quantity" which differs from the physical quantity by the fact that various quasi-quantity values correspond to the definite value of the physical quantity in various coherence systems. Physical equations presented in their common form, which is

APPROVED FOR RELEASE: 07/16/2001 CIA-RDP86-00513R001755810003-1"

"APPROVED FOR RELEASE: 07/16/2001 CIA-RDP86-00513R001755810003-1

The substantiation of calculation with... S/058/63/000/003/003/104
A160/A101

general for the family of the measurement unit systems relating to one coherence system, may be considered as equations between quantities obtained as a result of measurements, or as equations between quasi-quantities. However, they must not be regarded as equations between physical quantities, since their coefficients depend on the selection of the coherence system.

A. Bernshteyn

[Abstracter's note: Complete translation]

Card 3/3

APPROVED FOR RELEASE: 07/16/2001 CIA-RDP86-00513R001755810003-1"

"APPROVED FOR RELEASE: 07/16/2001 CIA-RDP86-00513R001755810003-1

TIMOTIN, A.

TECHNOLOGY

Periodicals: ELECTROTEHNICA. Vol. 6, no. 7, July 1958

TIMOTIN, A. Conservative quantities in nonlinear electric networks. p. 306

Monthly List of East European Accessions (EEAI) LC, Vol.8, No. 2, February 1959, Unclass.

APPROVED FOR RELEASE: 07/16/2001 CIA-RDP86-00513R001755810003-1"

"APPROVED FOR RELEASE: 07/16/2001 CIA-RDP86-00513R001755810003-1

RADULET, Remus; TIMOTIN, Alexandru

Interpretation of the method of rationalization in electromagnetism. Rev electrotechn energet 4 no.2:201-235 '59. (EEAI 10:1)

1. Korrespondierendes Mitglied der Akademie der Rumaenischen Volksrepublik (for Radulet)
(Electromagnetism)

APPROVED FOR RELEASE: 07/16/2001 CIA-RDP86-00513R001755810003-1"

"APPROVED FOR RELEASE: 07/16/2001 CIA-RDP86-00513R001755810003-1

TIMOTIN, Alexandru

Magnetic field problems in substances of very great permeability. Studii cerc energet A 12 no.4:553-566 '62.

APPROVED FOR RELEASE: 07/16/2001 CIA-RDP86-00513R001755810003-1"

"APPROVED FOR RELEASE: 07/16/2001 CIA-RDP86-00513R001755810003-1

NEMOIANU, Constantin; TIMOTIN, Alexandru

Skin effect of adduction current in sheets of different conductivities and permeabilities in contact at the ends. Bul Inst Politeh 26 no.3:137-148 My-Je '64.

1. Chair of Electrical Engineering, Polytechnic Institute, Bucharest.

APPROVED FOR RELEASE: 07/16/2001 CIA-RDP86-00513R001755810003-1"

"APPROVED FOR RELEASE: 07/16/2001 CIA-RDP86-00513R001755810003-1

TIMOTIN, A.; TUGULEA, A.

Interpretation of the Maxwell-Hertz electrodynamics in the light of the theory of relativity. Bul Inst Politeh 26 no.2:127-145 Mr-Ap '64.

1. Chair of electrical engineering, Polytechnic Institute, Bucharest.

APPROVED FOR RELEASE: 07/16/2001 CIA-RDP86-00513R001755810003-1"

"APPROVED FOR RELEASE: 07/16/2001 CIA-RDP86-00513R001755810003-1

TIMOTITY, L.

Agriculture

"MAGYAR MEZGAZDASAG"

The number of offspring necessary to control offspring. IV. p. 2

Vol. 10, No. 19, Oct. 1955

Monthly List of East European Accessions (EEAI), LC, Vol. 8, No. 4, April 1959
Unclas.

APPROVED FOR RELEASE: 07/16/2001 CIA-RDP86-00513R001755810003-1"

"APPROVED FOR RELEASE: 07/16/2001 CIA-RDP86-00513R001755810003-1

TIMOTIYEVICH, K.D., inzh.

Optimum angle of the slope in working soft rocks with dragline excavators and its effect on the construction features of the machine. Gor. zhur. no.12:53 D '62. (MIRA 15:11)

1. TSentrogiproruda, Belgorod.
(Strip mining) (Excavating machinery)

APPROVED FOR RELEASE: 07/16/2001 CIA-RDP86-00513R001755810003-1"

"APPROVED FOR RELEASE: 07/16/2001 CIA-RDP86-00513R001755810003-1

TIMOTIYEVICH, K.D.

Ventilation of mines in high mountainous areas. Sbor.trud.Inst. gor.dela AN URSR no.8:132-137 '61. (MIRA 15:2)
(Soviet Central Asia--Mine ventilation)

APPROVED FOR RELEASE: 07/16/2001 CIA-RDP86-00513R001755810003-1"

"APPROVED FOR RELEASE: 07/16/2001 CIA-RDP86-00513R001755810003-1

KHALDNA, Yu.L. [Haldna, J.]; TUULMETS, A.V.; LAANESTE, Kh.E. [Laaneste, H.]; TIMOTKHEUS, Kh.R. [Timotheus, H.]

Gas liquid chromatographic separation of mixtures of alcohols, ketones, and nitro compounds. Izv. vys. ucheb. zav., khim. i khim. tekh. 7 no.5:865-867 '64 (MIRA 18:1)

1. Laboratoriya khimicheskoy kinetiki i kataliza Tartuskogo gosudarstvennogo universiteta.

APPROVED FOR RELEASE: 07/16/2001 CIA-RDP86-00513R001755810003-1"

"APPROVED FOR RELEASE: 07/16/2001 CIA-RDP86-00513R001755810003-1

SIROVSKIY, G.V., TIMOTKHEUS, K.R. [Timotheus, H.]

Determining the free and bound alkalies in phenolate solutions by the conductometric method. Khim. i tekh. gor. slan. i prod. ikh perer. no.10:290-300 '62.

Fast method for determining the neutral oxygen compounds in shale tar fractions; modification of the Stadnikov method. Ibid.:301-309 (MIRA 17:5)

APPROVED FOR RELEASE: 07/16/2001 CIA-RDP86-00513R001755810003-1"

"APPROVED FOR RELEASE: 07/16/2001 CIA-RDP86-00513R001755810003-1

TIMOV, A. I.

"Mechanism of nitrating aromatic compounds by nitric acid; II. Relative potentials of electrons in aromatic compounds. Mechanism of nitrating nitrophenols". Timov, A. I. (p. 517)

SO: Journal of General Chemistry (Zhurnal Obshchei Khimii) 1949, Vol, 19, No. 3

APPROVED FOR RELEASE: 07/16/2001 CIA-RDP86-00513R001755810003-1"

"APPROVED FOR RELEASE: 07/16/2001 CIA-RDP86-00513R001755810003-1

TIMOV, A. I.

"Theory of nitrating saturated hydrocarbons and their derivatives". Timov, A. I. (p. 258)

SO: Journal of General Chemistry, (Zhurnal Obshchei Khimii) 1949, Vol. 19, No. 2.

APPROVED FOR RELEASE: 07/16/2001 CIA-RDP86-00513R001755810003-1"

"APPROVED FOR RELEASE: 07/16/2001 CIA-RDP86-00513R001755810003-1

Timov, A. I.

"Mechanism of catalytic nitration of aromatic compounds with the presence of mercuric salts: II. General theory of reaction, conversion of mercuric aromatic compounds in interaction with nitric acid". Timov, A. I. and Lapnev, N. G. (p. 267)

SO: Journal of General Chemistry, (Zhurnal Obshchei Khimii) 1949, Vol. 19, No. 2.

APPROVED FOR RELEASE: 07/16/2001 CIA-RDP86-00513R001755810003-1"

"APPROVED FOR RELEASE: 07/16/2001 CIA-RDP86-00513R001755810003-1

TIMOV, A. V.

"Complex compounds, containing chloride of magnesium in water solutions".
Timov, A. V. (p. 458)

SO: Journal of General Chemistry (Zhurnal Obshchei Khimii) 1949, Vol. 19, No. 3

APPROVED FOR RELEASE: 07/16/2001 CIA-RDP86-00513R001755810003-1"

"APPROVED FOR RELEASE: 07/16/2001 CIA-RDP86-00513R001755810003-1

TIMOV, B.

Difficulties in medical aid, during arrival at the site of accident and during transportation of the patient to the hospital in emergencies and organizational problems. Khirurgiia, Sofia 12 no.1:69-78 1959.

1. Institut za burza meditsinska pomoshch "N. I. Pirogov" - Sofiia Glaven lekar: B. Devetakov.
(EMERGENCIES,
difficulties in management & organiz. of aid in emergency cases (Bul))

APPROVED FOR RELEASE: 07/16/2001 CIA-RDP86-00513R001755810003-1"

"APPROVED FOR RELEASE: 07/16/2001 CIA-RDP86-00513R001755810003-1

TIMOV, N.G.

2276. VINYLATION OF COAL OF THE MOSCOW BASIN. Shostakovskii, [illegible], Timov, N.G. and Smirnov, P.N. (Zhur. prikl. Khim. [illegible] 1956, Vol. [illegible] [illegible]

[illegible]

15 g sodium [illegible] [illegible]

[illegible]

[illegible] autoclave was refilled [illegible] at the end of the reaction. The yield was [illegible] g of a dark brown powder containing 10.8% vinyl groups and 6% volatile matter (steam-distillation). Up to 40% was soluble in alcohols, ethers, toluene, benzene, acetone and lignoine; after 1 month the solubility was 15-17%. The lacquer-like film formed on evaporation of the solvent was brittle. C.A.

APPROVED FOR RELEASE: 07/16/2001 CIA-RDP86-00513R001755810003-1"

"APPROVED FOR RELEASE: 07/16/2001 CIA-RDP86-00513R001755810003-1

TIMOV, N. G.

Vinylation of coal of the Moscow Basin M. F. Shostakovskii, N. G. Timov and R. N. Sharnov. J. Appl. Chem. U.S.S.R. 29, [illegible]

APPROVED FOR RELEASE: 07/16/2001 CIA-RDP86-00513R001755810003-1"

"APPROVED FOR RELEASE: 07/16/2001 CIA-RDP86-00513R001755810003-1

TIMOV, N.G.

3

Vinylation of coal of the Moscow Basin. M. F. Shostakovskii, N. G. Timov, and F. N. Smirnov. *Zhur. Prikhal. Khim.* 29, 403-7(1956).—Coal from the Rya Mine was easily saponif., yielding up to 0% OH groups and contained 3.31% CO groups. Fifty g. of this coal was reduced with 15 g. $Na_2S_2O_4.2H_2O$ in 200 ml. of 25% NaOH, yielding a product contg. 4.86% OH and 0.47% CO groups. The solids and liquid of the reduction reaction were transferred to an autoclave filled with C_2H_2 and heated for 24 hrs. at 170-75° under 10 atms. of C_2H_2; the autoclave was refilled with C_2H_2 every 6 hrs. and the pressure was 8 atm. at the end of the reaction. The yield was 54.5 g. of a dark-brown powder contg. 10.8% vinyl groups and 6% volatile matter (steam-distn.). Up to 40% was sol. in alcs., ethers, toluene, C_6H_6, Me_2CO, and ligroine; after 1 month the soly. was 15-17%. The lacquer-like film formed on the evapn. of the solvent was brittle.

I. Doucowitz

APPROVED FOR RELEASE: 07/16/2001 CIA-RDP86-00513R001755810003-1"

"APPROVED FOR RELEASE: 07/16/2001 CIA-RDP86-00513R001755810003-1

SOV-109-3-4-29/28

AUTHOR: Timov, M. K.

TITLE: The 60-th Birthday of I. Kh. Nevyazhskiy (I. Kh. Nevyazhskiy - K 60-letiyu so dnya rozhdeniya)

PERIODICAL: Radiotekhnika i Elektronika, 1958, Vol 3, Nr 4, pp 582-584 (USSR)

ABSTRACT: Professor Isaak Kharitonovich Nevyazhskiy was born on February 1, 1898 and graduated from the Electro-Technical Faculty of the Moscow Technical University in 1925, where he specialised in radio engineering under Professor M. V. Shuleykin. Since his graduation Professor Nevyazhskiy has been working creatively in many branches of radio engineering. In 1927 he designed one of the first radio stations operating with the grid modulation in the Soviet Union. In the following years he worked on the theory and design of multistage transmitters and RF power amplifiers. His contribution to the problem of neutralisation (theory as well as practical circuits) was outstanding. Towards 1935 he worked on low power and high power (from 1 to 15 kW) short

Card 1/2

APPROVED FOR RELEASE: 07/16/2001 CIA-RDP86-00513R001755810003-1"

"APPROVED FOR RELEASE: 07/16/2001 CIA-RDP86-00513R001755810003-1

SOV-109-3-4-28/28

The 60-th Birthday of I. Kh. Nevyazhskiy

wave transmitters and also constructed a short wave radio station operating at 120 kW. During the years of World War II, Nevyazhskiy was engaged in the solution of various radio engineering problems connected with the defence of the Soviet Union and for his work was awarded a Stalin Prize of the First Grade and an Order of Lenin. In recent years he has been working on the applications of high frequency techniques to the particle accelerators. The Radio Engineering Laboratory of the Soviet Academy of Sciences has built, under his leadership, a phasotron for 700 million eV and a synchrophasotron for 10 milliards eV. In 1956 Nevyazhskiy was a member of the Soviet delegation to the International Conference on High Energy Particles in Geneva.

1. Radio--USSR

Card 2/2

APPROVED FOR RELEASE: 07/16/2001 CIA-RDP86-00513R001755810003-1"

"APPROVED FOR RELEASE: 07/16/2001 CIA-RDP86-00513R001755810003-1

TIMOV, V.

Mass blood donation. Khir. & ortop. 3 no.3:191 1950. (CLML 20:5)

1. Head of the Central Institute of Hematology and Blood-Transfusion.

APPROVED FOR RELEASE: 07/16/2001 CIA-RDP86-00513R001755810003-1"

"APPROVED FOR RELEASE: 07/16/2001 CIA-RDP86-00513R001755810003-1

PASKALEV, G.; TIMOV, VI.

On the problem of first aid. Khirurgiia, Sofia 10 no.6:540-548 1957.

1. Stantsiia, bursa pomoshch pri zdravniia otdel na sgns. Gl. lekar: G. Paskalev.
(FIRST AID
organiz. in Bulgaria (Bul))

APPROVED FOR RELEASE: 07/16/2001 CIA-RDP86-00513R001755810003-1"

"APPROVED FOR RELEASE: 07/16/2001 CIA-RDP86-00513R001755810003-1

USSR/Physics - Quartz clock

FD-576

Card 1/1 Pub. 153-16/28

Author : Bryzzhev, L. D., and Timov, V. N.

Title : Simple tuning-fork quartz clock

Periodical : Zhur. tekh. fiz. 24, 879-883, May 1954

Abstract : Describe simple quartz clocks operating on the basis of a piezoquartz tuning fork with a frequency of 1000 cycles/sec. In addition to the second impulses the device gives frequencies of 100 and 1000 cycles at the output. The daily variation in the behavior of the clock is about ± 0.002 second, which corresponds to a relative change of frequency of $\pm 2 \cdot 10^{-8}$.

Institution :

Submitted : May 15, 1953

APPROVED FOR RELEASE: 07/16/2001 CIA-RDP86-00513R001755810003-1"

"APPROVED FOR RELEASE: 07/16/2001 CIA-RDP86-00513R001755810003-1

L 10668-63 EPF(c)/EWP(j)/EWT(m)/BDS--Pr-4/Pc-4--RM/WW

S/079/63/033/004/003/010 64 63

AUTHOR: Yur'yev, Yu.K., Magdesiyeva, N.N., Timov, V.V.

TITLE: Chemistry of selenophene. XLIV. Bis-β-diketone series of selenophene

PERIODICAL: Zhurnal obshchey khimii, v. 33, no. 4, 1963, 1156-1160

TEXT: Relatively little attention has been devoted to bis-β-diketones; however, the author has accomplished the synthesis of two types of bis-β-diketones of the selenophene series. The condensation of 2-acetoselenophene with esters of terephthalic and dipicolinic acids in the presence of sodium amide leads to the formation of terephtaloyl-bis(2-acetoselenophene) and dipicolinoyl-bis(2-acetoselenophene). The interaction of ω-benzoyl-, ω-(furoyl-2)-, and ω-(thenoyl-2)-2-acetoselenophene and also of di(selenenoyl-2)methane with formaldehyde in the

Card 1/2

APPROVED FOR RELEASE: 07/16/2001 CIA-RDP86-00513R001755810003-1"

"APPROVED FOR RELEASE: 07/16/2001 CIA-RDP86-00513R001755810003-1

L 10668-63

S/079/63/033/004/003/010

Chemistry of selenophone...

presence of secondary amines occurs smoothly with the formation correspondingly of 1,3-dibenzoyl-1,3-di(selenenoyl-2)-, 1,3-di(furoyl-2)-1,3-di(selenenoyl-2)-, 1,3-di(thenoyl-2)-1,3-di(selenenoyl-2)-, and 1,1,3,3-tetra-(selenenoyl-2)propanes. There is 1 table which gives the infrared and ultraviolet spectra of the bis-β-diketones of the selenophene series.

ASSOCIATION: Moskovskiy gosudarstvennyy universitet imeni M.V. Lomonosova (Moscow State University imeni M.V. Lomonosov)

SUBMITTED: March 19, 1962

kes

Card 2/2

APPROVED FOR RELEASE: 07/16/2001 CIA-RDP86-00513R001755810003-1"

"APPROVED FOR RELEASE: 07/16/2001 CIA-RDP86-00513R001755810003-1

5.3610

77905
SOV/79-30-2-56/78

AUTHORS: Timov, Ye. A., Burmistrov, S. I.

TITLE: Indophenol Reaction of N-Arenesulfonylquinonimines

PERIODICAL: Zhurnal obshchey khimii, 1960, Vol 30, Nr 2, pp 623-628 (USSR)

ABSTRACT: The authors reported previously (this j., 1952, Vol 22, p 999) that the reaction of arenesulfonylquinonimines (II) with phenols in alkaline medium gave a blue coloration due to the formation of indophenols. p-Toluenesulfonylquinonimine gave in this reaction p-toluenesulfinic acid and the simplest indophenol, as shown by the general reaction:

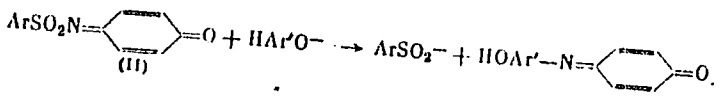

Card 1/5

APPROVED FOR RELEASE: 07/16/2001 CIA-RDP86-00513R001755810003-1"

"APPROVED FOR RELEASE: 07/16/2001 CIA-RDP86-00513R001755810003-1

Indophenol Reaction of N-Arenesulfonyl-quinonimines

77905
SOV/79-30-2-56/78

R. Adams and K. R. Eilar reported, however (J. Am. Chem. Soc., 1951, Vol 73, p 1149) that (bis-arenesulfonyl)quinonediimines in reaction with phenol in anhydrous medium in the presence of $AlCl_3$ gave 4-hydroxy-2', 5'-bis-arenesulfonylamidodiphenyl (I):

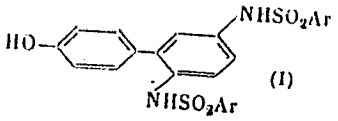

(I)

In the present article the authors confirmed the results of their previous study, synthesized 4 new arenesulfonyl-quinonimines, and analyzed the reaction products by paper chromatography. The starting compound, N-m-nitro-benzenesulfonyl-1,4-aminophenol, obtained on acylation of p-aminophenol with m-nitrobenzenesulfonyl chloride in methanol, was oxidized in a solutionof sodium dichromate (in 50% excess of the stoichiometric amount) and 20% sulfuric acid. The mixture was stirred for 1 hr and then diluted with a large amount of water. The filtered precipitate was washed with water to neutral reaction,

Card 2/5

APPROVED FOR RELEASE: 07/16/2001 CIA-RDP86-00513R001755810003-1"

"APPROVED FOR RELEASE: 07/16/2001 CIA-RDP86-00513R001755810003-1

Indophenol Reaction of N-Arenesulfonyl-quinonimines

77995
SOV/79-30-2-56/78

and then with a small amount of cold ethanol which dissolved the nonoxidized products. The dry residue (yield 90%), carefully crystallized from ethanol, had mp 156° C (orange-red crystals) and was readily soluble in benzene and acetic acid, not as easily soluble in cold ethanol, and insoluble in water. The product was identified as N-m-nitrobenzenesulfonyl-1,4-benzoquinonimine (II; Ar = m-$NO_2C_6H_4$). Similarly, N-o-nitrobenzenesulfonyl-1,4-benzoquinonimine (II; Ar = o-$NO_2C_6H_4$; mp 152-153° C, decomp.), N-p-chlorobenzenesulfonyl-1,4-benzoquinonimine (II; Ar = p-ClC_6H_4; mp 127.5° C), and N-p-bromobenzenesulfonyl-1,4-benzoquinonimine (II; Ar = p-BrC_6H_4; mp 141.5° C) were obtained, respectively, from N-o-nitrobenzenesulfonyl-1,4-aminophenol, N-p-chlorobenzenesulfonyl-1,4-aminophenol, and N-p-bromobenzenesulfonyl-1,4-aminophenol. The indophenol reaction of the above arenesulfonylquinonimines with the corresponding

Card 3/5

APPROVED FOR RELEASE: 07/16/2001 CIA-RDP86-00513R001755810003-1"

"APPROVED FOR RELEASE: 07/16/2001 CIA-RDP86-00513R001755810003-1

Indophenol Reaction of N-Arenesulfonyl-quinonimines

77905
SOV/79-30-2-56/78

phenols was made in a water-ammonia solution. Identification of the reaction products was made with paper chromatography in a mixture of n-butanol aqueous ammonia solution, in a 1:1 ratio. The formation of indophenols and arenesulfinic acid was confirmed, and no other reaction products were found. The authors suggest the following mechanism of reaction:

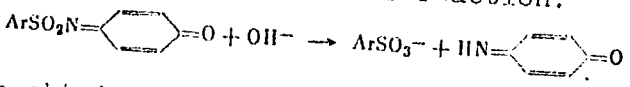

Quinonimine obtained in the above hydrolysis of arenesulfonylquinonimine combines, presumably, with phenol and gives indophenol. It was further established that arenesulfonylquinonimines on treatment with alkalies were reduced to arenesulfonyl-1,4-aminophenols. For example, p-bromobenzenesulfonyl-1,4-benzoquinonimine in reaction with NaOH and subsequent neutralization of the filtrate with HCl gave a precipitate (yield 66%; mp 191° C) which was identified as p-bromobenzenesulfonyl-1,4-aminophenol.

Card 4/5

APPROVED FOR RELEASE: 07/16/2001 CIA-RDP86-00513R001755810003-1"

"APPROVED FOR RELEASE: 07/16/2001 CIA-RDP86-00513R001755810003-1

Indophenol Reaction of N-Arenesulfonyl-quinonimines

77905
SOV/79-30-2-56/78

This confirmed the above assumption of the mechanism of the indophenol reaction. There are 2 tables; and 6 references, 2 U.S., 1 German, 3 Soviet. The U.S. references are: R. Adams, K. R. Eilar, J. Am. Chem. Soc., 73, 1149 (1951); R. Adams, J. H. Looker, ibid., 73, 1145 (1951).

ASSOCIATION: Dnepropetrovsk Chemical Technological Institute (Dnepropetrovskiy khimiko-tekhnologicheskiy institut)

SUBMITTED: February 9, 1959

Card 5/5

APPROVED FOR RELEASE: 07/16/2001 CIA-RDP86-00513R001755810003-1"

"APPROVED FOR RELEASE: 07/16/2001 CIA-RDP86-00513R001755810003-1

TIMOVA, Lyuba

Bulgaria/Chemical Technology - Chemical Products and Their Application. Fermentation Industry, I-27

Abst Journal: Referat Zhur - Khimiya, No 19, 1956, 63605

Author: Timova, Lyuba

Institution: None

Title: Determination of the Freezing Point of Bulgarian Table Wines

Original Periodical: Opredelyavane tochkata na zamr"zvane na b"lgarskite trapezni vina v"v vr"zka s tritinareto im s niska temperature. Lozarstvo i vinarstvo, 1955, 4, No 6, 351-364; Bulgarian

Abstract: A review, essentially of Soviet work on treatment of wine with cold. Listed are the freezing points of 258 samples of Bulgarian table wines of 1947 and 1949 vintages (from -3.5° to -9.0°, most wines froze at -6.0°). Practical recommendations are made concerning treatment of wine using natural cooling.

Card 1/1

APPROVED FOR RELEASE: 07/16/2001 CIA-RDP86-00513R001755810003-1"

"APPROVED FOR RELEASE: 07/16/2001 CIA-RDP86-00513R001755810003-1

1. SANTALOV, F. A.: TIMOVA, V. A.

2. USSR (600)

4. Silver-Zinc Alloys

7. Microstructure and formation of pores of cylindrical forms of silver-zinc alloys during the distillation of zinc. Zhur. tekh. fiz. 22 no. 11, 1952.

9. Monthly List of Russian Accessions, Library of Congress, March 1953. Unclassified.

APPROVED FOR RELEASE: 07/16/2001 CIA-RDP86-00513R001755810003-1"

"APPROVED FOR RELEASE: 07/16/2001 CIA-RDP86-00513R001755810003-1

EWT(m)/EWP(t)/ETI/EWP(k) IJP(c) JD/HW

ACC NR: AP6041222 (N) SOURCE CODE: UR/0133/66/000/009/0813/0815

AUTHOR: Pliyazev, D. I.; Krivonosov, Yu. I.; D'yachenko, K. K.; Timoveyev, D. I.; Khoroshilov, N. M.

ORG: Ukrainian Scientific Research Institute for Metals (Ukrainskiy nauchno-issledovatel'skiy institut metallov); Kommunarsk Metallurgical Plant (Kommunarskiy metallurgicheskiy zavod)

TITLE: Ways to improve the production technology of two layer steel plates

SOURCE: Stal', no. 9, 1966, 813-815

TOPIC TAGS: COMPOSITE MATERIAL, METAL ROLLING steel, composite steel, composite steel plate, plate pack rolling, composite plate casting/Kh18N10T steel, Kh17N13M2T steel, St. 3 steel, K20 steel

ABSTRACT: The Kommunarsk Metallurgical Plant produces two-layer composite steel plates, 8—25 mm thick by pack rolling; heavier, 25—50 mm thick, composite plates, thick, are rolled from composite ingot. The Kuznetsk Metallurgical Combine produces 6—40 mm thick composite steel plates from composite ingots. Experience showed both methods to have substantial shortcomings, and the yield is low. The Ukrainian Scientific Research Institute for Metals and the Zhdanov Metallurgical Plant im. Il'icha conducted an investigation in order to improve the quality and the yield of finished products. The investigation showed that pack rolling is a more suitable method of producing heavy composite steel plates than casting of composite ingots. To produce composite plates with more uniform layer thicknesses by pack rolling, the

Card 1/2 UDC: 621.771.8

APPROVED FOR RELEASE: 07/16/2001 CIA-RDP86-00513R001755810003-1"

"APPROVED FOR RELEASE: 07/16/2001 CIA-RDP86-00513R001755810003-1

L 08948-67

ACC NR: AP6031222

4

assembled packs should be preheated in car bottom furnaces or in soaking pits. To reduce production waste, the packs should have the maximum possible width and length, with the edge strips joined flush with the slab side faces. The pack thickness should be as small as possible but sufficiently thick to ensure satisfactory welding of the layers during rolling. By this technology, two-layer composite plates 32, 36, 80, 100 and 130 mm thick have been successfully rolled from 10—15 ton packs heated in a car bottom furnace. In all produced plates, a layer of Kh18N10T or Kh17N13M2T steel was welded satisfactorily with the base layer of St.3 or K20 steel. The rolling was done in a 4500 mm stand at the Zhdanov Metallurgical Plant. The plates were 2600 mm wide, although they could have been made 3000 mm wide. The quality of composite ingots can be appreciably improved by the use of less gas-liberating fluxes and better protection against oxidation of two-layer slabs during preheating. Orig. art. has: 4 figures and 5 formulas. [MS]

SUB CODE: 13/ SUBM DATE: none/ ORIG REF: 005/

Card 2/2

APPROVED FOR RELEASE: 07/16/2001 CIA-RDP86-00513R001755810003-1"

"APPROVED FOR RELEASE: 07/16/2001 CIA-RDP86-00513R001755810003-1

TIMOVEYEVA, L.A.; APARIN, G.P.; GOLOVACHEVA, V.Ya.

Stained medium for diagnosing causative agents of some diseases originating in natural foci. Lab.delo 3 no.4:38-39 Jl-Ag '57. (MLRA 10:8)

1. Iz Irkutskogo nauchno-issledovatel'skogo protivochumnogo instituta Sibiri i Dal'nego Vostoka (dir. N.D.Altareva) Ministerstva zdravookhraneniya SSSR

(BACTERIOLOGY--CULTURES AND CULTURE MEDIA)

APPROVED FOR RELEASE: 07/16/2001 CIA-RDP86-00513R001755810003-1"

"APPROVED FOR RELEASE: 07/16/2001 CIA-RDP86-00513R001755810003-1

TIMOVEYEV, V. M.

COMMUNICATION

"Analysis of Five-Digit Codes for Letter-Printing Telegraph Apparatus," by Yu. I. Savitskiy and V. M. Timoveyev, Elektrosvyaz', No 7, July 1957, pp 57-62

Various telegraph codes for letter-printing sets are analyzed from the point of view of protection against "register" errors. A method is proposed for devising a telegraph code with a minimum probability of false service combination.

Card 1/1

APPROVED FOR RELEASE: 07/16/2001 CIA-RDP86-00513R001755810003-1"

"APPROVED FOR RELEASE: 07/16/2001 CIA-RDP86-00513R001755810003-1

URETSKAYA; VISHNYAKOVA; BORISOV; PINKHASOVICH; MURADOV; REGEL'MAN; OSERSKIY; PYATOV; BOKSERMAN; GORPISHCHENKO; YEREMENKO; ZHARKOV; POPOV; ROMANOVA; SIDORENKO; TODRIN; TIMOVEYEVA.

Dmitrii Sergeevich Pavlov; obituary. Gaz. prom. no.1:56 Ja '58. (Pavlov, Dmitrii Sergeevich, 1904-1957) (MIRA 11:2)

APPROVED FOR RELEASE: 07/16/2001 CIA-RDP86-00513R001755810003-1"

"APPROVED FOR RELEASE: 07/16/2001 CIA-RDP86-00513R001755810003-1

ENGEL'GARDT, V.A.; LYUBIMOVA, M.N.; VENKSTERN, T.V.; TIMOVEYEVA, M.Ya.; BABSKAYA, Yu.B.

Enzymatology of myosin, splitting of adenosintriphosphatase and deaminase. Doklady Akad. nauk SSSR 85 no. 2:397-400 11 July 1952. (CLML 23:3)

1. Corresponding Member of the Academy of Sciences USSR for Engel'gardt.

APPROVED FOR RELEASE: 07/16/2001 CIA-RDP86-00513R001755810003-1"

"APPROVED FOR RELEASE: 07/16/2001 CIA-RDP86-00513R001755810003-1

TIMOVEYEVA, Ye.A.; KLEYMENOVA, V.M.; DOBRYNINA, T.P.

Using a bromometric technique for determining the Kaufman-Gal'pern iodine numbers for some C_5- and C_6-composition hydrocarbons. Izv. AN SSSR. Otd. khim. nauk no.1:122-123 Ja '57. (MLRA 10:4)

1. Institut organicheskoy khimii im. N.D. Zelinskogo Akademii nauk SSSR.

(Hydrocarbons)

APPROVED FOR RELEASE: 07/16/2001 CIA-RDP86-00513R001755810003-1"

"APPROVED FOR RELEASE: 07/16/2001 CIA-RDP86-00513R001755810003-1

L 07992-67 EWP(k)/EWT(m)/EWP(t)/ETI IJP(c) JD/HW

ACC NR: AP7001666 SOURCE CODE: UR/0144/66/000/006/0656/0662

AUTHOR: Lur'ye, Z. Ya.; Timovskiy, A. K.; Grushko, V. L.

ORG: none

TITLE: Electron model investigation of automated multi-motor electric drive for device for cross cutting rolled steel

SOURCE: IVUZ. Elektromekhanika, no. 6, 1966, 656-662

TOPIC TAGS: metal cutting, automation, nonlinear differential equation

ABSTRACT: The transient processes in an automated system for periodic cutting of continually rolled sheet into lengths are described by complex non-linear differential equations. Due to the difficulty of solution of the equations, the investigation of the dynamics of such systems is often performed using mathematical modeling with continuous-operation electronic machines. This article analysis problems in the investigation of a multi-motor electric drives for such an apparatus using an electronic model. Practical recommendations are presented relative to methods of investigation in consideration of the pecularities of the technological processes involved. The electron model investigations performed allowed the authors to suggest the following method of investigation:

1) Clarification of the structure of the speed control of the temper

Card 1/2

UDC: 621.34+621.771

APPROVED FOR RELEASE: 07/16/2001 CIA-RDP86-00513R001755810003-1"

"APPROVED FOR RELEASE: 07/16/2001 CIA-RDP86-00513R001755810003-1

L 07992-67
ACC NR: AP7001666

mill;

2) Determination of the structure of the compensation units and dynamatic components of the stress;

3) Determination of the parameters and correcting links for the automatic control units in loops providing the required static accuracy, stability and quality of the transient process;

4) Clarification of the parameters involved in combined operation of the entire control system. The control system developed has been in operation since 1963. Orig. art. has: 5 figures and 10 formulas. [JPRS: 37,811]

SUB CODE: 13, 12 / SUBM DATE: 30Apr65 / ORIG REF: 006

Card 2/2

APPROVED FOR RELEASE: 07/16/2001 CIA-RDP86-00513R001755810003-1"

"APPROVED FOR RELEASE: 07/16/2001 CIA-RDP86-00513R001755810003-1

TIMPE, M.

Mathematical Reviews
Vol. 14 No. 11
December, 1953
Mechanics.

Šeremet'ev, M. P. Elastic equilibrium of an elliptic ring. (Akad. Nauk SSSR. Prikl. Mat. Meh. 17, 107–113 (1953). (Russian)

The author investigates a ring bounded by two confocal ellipses, the loads being applied on the boundaries. A. Timpe [Math. Z. 17, 189–205 (1923)] solved the above problem, but Musheliŝvili [Some fundamental problems of the mathematical theory of elasticity, Izdat. Akad. Nauk SSSR, Moscow-Leningrad, 1949, p. 231; these Rev. 11, 626] pointed out that Timpe's solution is incorrect. The author gives now a correct solution. He uses a conformal mapping method presented in an earlier work [Ukrain. Mat. Žurnal 1, no. 3, 68–80 (1949); these Rev. 15, 886]. A numerical example of a ring with given confocal ellipses as boundaries, and the outer boundary compressed by a constant distributed normal load illustrates the use of general formulas.

T. Leser (Lexington, Ky.).

APPROVED FOR RELEASE: 07/16/2001 CIA-RDP86-00513R001755810003-1"

"APPROVED FOR RELEASE: 07/16/2001 CIA-RDP86-00513R001755810003-1

TEMPKO, V. A.

TEMPKO, V. A. -- "An Analysis of Vital Forms of Plants and Its Significance in the Solution of the Problem of Modifying Natural Plantings of Walnuts in Southern Kirgizia." Sub 6 Mar 52, Moscow Oblast Pedagogical Inst. (Dissertation for the Degree of Candidate in Biological Sciences).

SO: Vechernaya Moskva January-December 1952

APPROVED FOR RELEASE: 07/16/2001 CIA-RDP86-00513R001755810003-1"

"APPROVED FOR RELEASE: 07/16/2001 CIA-RDP86-00513R001755810003-1

KOROVIN, S.Ye., kand.biolog.nauk; TIMPKO, V.A., kand.biolog.nauk; TIKHONENKO, I.I.; KONDRAT'YEVA, T.V.; SMYCHNIKOVA, T.V.; TSITSIN, N.V., akademik, otv.red.; FORTUNATOV, I.K., red. izd-va; GUSEVA, A.P., tekhn.red.

[Botanical gardens of the world; brief manual] Botanicheskie sady mira; kratkii spravochnik. Moskva, Izd-vo Akad.nauk SSSR, 1959. 102 p. (MIRA 12:10)

1. Moscow. Glavnyy botanicheskiy sad. 2. Direktor Glavnogo botanicheskogo sada AN SSSR (for TSitsin).
(Botanical gardens)

APPROVED FOR RELEASE: 07/16/2001 CIA-RDP86-00513R001755810003-1"

"APPROVED FOR RELEASE: 07/16/2001 CIA-RDP86-00513R001755810003-1

Translation from: Referativnyy zhurnal, Geografiya, 1957, Nr 7, p 134 (USSR) 14-57-7-15007

AUTHOR: Timpko, V. A.

TITLE: Modern Types of Walnut, Juglans Fallax Dode, in the Natural Forests of Southern KirgizSSR (Zhiznennyye formy rasteniy prirodnykh nasazhdeniy gretskogo orekha Juglans Fallax Dode Yuzhnoy Kirgizii)

PERIODICAL: Uch. zap. Mosk. obl. ped. in-t, 1956, Vol 41, pp 132-143

ABSTRACT: Since it has been decided to expand the walnut-growing area in Central Asia and to increase its yield, many studies of the large walnut concentrations in Southern KirgizSSR have been undertaken. Analysis and comparison of the data acquired have made it possible to establish scientific means for improving these forests and for increasing their yield. Any

Card 1/2

APPROVED FOR RELEASE: 07/16/2001 CIA-RDP86-00513R001755810003-1"

"APPROVED FOR RELEASE: 07/16/2001 CIA-RDP86-00513R001755810003-1

Modern Types of Walnut (Cont.) 14-57-7-15007

attempts at walnut reforestation must take into consideration the tree's need of sunlight; consequently, new plantings must be spread over a large area. Improvement measures will also be necessary to secure an adequate water supply. The beneficial effect of the walnut on some other species, such as the apple and the plum, should be kept in mind, and the unrestricted growth of root and sod grasses must be prevented. To protect the young trees, it should be absolutely forbidden to pasture cattle or to mow the grass in areas where walnuts have been planted.

Card 2/2

A. L. A.

APPROVED FOR RELEASE: 07/16/2001 CIA-RDP86-00513R001755810003-1"

"APPROVED FOR RELEASE: 07/16/2001 CIA-RDP86-00513R001755810003-1

TIMEKO, V.A.

New species of meadow grass. Biul. Glav. bot. sada no.56:36-[illegible] '64. (MIRA 18:5)

1. Glavnyy botanicheskiy sad AN SSSR.

APPROVED FOR RELEASE: 07/16/2001 CIA-RDP86-00513R001755810003-1"